NEMA DC*5 89 ■ 6470247 0019366 6 ■ L-60-05

nema

NEMA STANDARDS PUBLICATION NO. DC 5

Residential Controls—Surface-Type Controls for Electric Storage Water Heaters

NEMA

NATIONAL ELECTRICAL MANUFACTURERS ASSOCIATION ■ 2101 L STREET, N.W., WASHINGTON, D.C. 20037

Copyright National Electrical Manufacturers Association
Provided by IHS under license with NEMA
No reproduction or networking permitted without license from IHS
Not for Resale

NEMA DC*5 89 ■ 6470247 0019367 8 ■

DC 5

RESIDENTIAL CONTROLS— SURFACE-TYPE CONTROLS FOR ELECTRIC STORAGE WATER HEATERS

Published by:

National Electrical Manufacturers Association
2101 L Street, N.W.
Washington, DC 20037

© 1990 by National Manufacturers Association

--`,,,``,,-`-`,,`,,`,`,,`---

Copyright National Electrical Manufacturers Association
Provided by IHS under license with NEMA
No reproduction or networking permitted without license from IHS

Not for Resale

Foreword

This Standards Publication defines the basic elements of construction and mounting considered to be necessary for the application of electric storage water heater controls. It has been developed in the public interest and is designed to promote a better understanding between the manufacturer and the user by providing for interchangeability through industry standardization.

This Standards Publication is designated NEMA Standard unless otherwise indicated.

These standards are periodically reviewed by the Residential Controls Section of NEMA for any revisions necessary to keep them up-to-date with advancing technology. Proposed or recommended revisions should be submitted to:

Vice President, Engineering
National Electrical Manufacturers Association
2101 L Street, N.W.
Washington, DC 20037

Copyright National Electrical Manufacturers Association
Provided by IHS under license with NEMA
No reproduction or networking permitted without license from IHS
Not for Resale

Scope

This Standards Publication applies to surface-type control thermostats and temperature-limiting controls for electric storage water heaters.

Copyright National Electrical Manufacturers Association
Provided by IHS under license with NEMA
No reproduction or networking permitted without license from IHS
Not for Resale

History of Standards

The Residential Controls Section of NEMA (formerly the Automatic Temperature Controls Section) was formed in 1940 to promote the standardization of products within the scope of the Section. These standards cover definitions, ratings, performance, testing, and dimensions. NEMA Standards are voluntary and are designed to eliminate misunderstandings between the purchaser and the manufacturer.

This publication is one of a series sponsored by the Residential Controls Section. Other publications in this series are identified as Pub. No. DC ____ (followed by the calendar year the publication was adopted).

NEMA Standards for surface-type electric water heater controls were first approved on March 17, 1955 as an addition to the NEMA Standards Publication for *Automatic Temperature Controls,* Publication No. DC 1-1953. They were revised in 1959, 1962, 1967, and 1976 and issued as a separate publication. The current edition, DC 5-1989, represents the latest revisions necessary to make the standards consistent with current technology and industry practice.

--`,,,`,,`-`-`,,`,,`,`,,`---

Copyright National Electrical Manufacturers Association
Provided by IHS under license with NEMA
No reproduction or networking permitted without license from IHS

Not for Resale

TABLE OF CONTENTS

		Page
	FOREWORD	i
	SCOPE	ii
	HISTORY OF STANDARDS	iii
Section 1	REFERENCED STANDARDS AND DEFINITIONS	
	Referenced Standards	1
	Definitions	1
Section 2	CLASSIFICATIONS	
	Classifications	2
Section 3	CONSTRUCTION	
	Dimensions	3
	Mounting Method	3
	Mounting Means	3
	Terminal Markings	3
Section 4	PERFORMANCE AND RATINGS	
	Performance and Ratings	4

Copyright National Electrical Manufacturers Association
Provided by IHS under license with NEMA
No reproduction or networking permitted without license from IHS
Not for Resale

Section 1
REFERENCED STANDARDS AND DEFINITIONS

1.1 REFERENCED STANDARDS

The following publications are adopted in whole or in part as indicated, by reference in this Standards Publication and are available from the source listed herein.

American National Standards Institute
1430 Broadway
New York, NY 10018

ANSI/UL 174-1983 — *Household Electric Storage-Tank Water Heaters*

ANSI/UL 873-1988 — *Temperature-Indicating and-Regulating Equipment*

1.2 DEFINITIONS

1.2.1 Surface-Type Temperature-Limiting Control

A fixed setting control that is designed to limit by energy cut-off the temperature of the water within a water heater in response to the external temperature of the tank.

1.2.2 Surface-Type Temperature-Regulating Thermostat

An adjustable control that is designed to control the temperature of the water within a water heater in response to the external temperature of the tank.

Copyright National Electrical Manufacturers Association
Provided by IHS under license with NEMA
No reproduction or networking permitted without license from IHS
Not for Resale

Section 2
CLASSIFICATIONS

2.1 CLASSIFICATIONS

Controls within the scope of this Standards Publication shall be classified as follows:

Type A—Thermostat: single pole single throw; opens on temperature rise at scale setting.

Type B—Thermostat: two pole opposite throw (two circuit); one pole opens and one pole closes on temperature rise at scale setting.

Type C—Thermostat: single pole double throw; one throw opens and one throw closes on temperature rise at scale setting.

Type D—Temperature-limiting control: two pole single throw; both poles open on temperature rise at marked setting; must be manually reset; resettable at a temperature not lower than 120°F (48.9°C).

Type E—Temperature-limiting control: one pole single throw; opens on temperature rise at marked setting; must be manually reset; resettable at a temperature not lower than 120°F (48.9°C).

Copyright National Electrical Manufacturers Association
Provided by IHS under license with NEMA
No reproduction or networking permitted without license from IHS
Not for Resale

Section 3
CONSTRUCTION

3.1 DIMENSIONS

To meet the requirements of 3.2 and 3.3, the general configuration for the bases of Type A, B, and C controls shall be in accordance with the dimensions as shown in Figure 3-1.

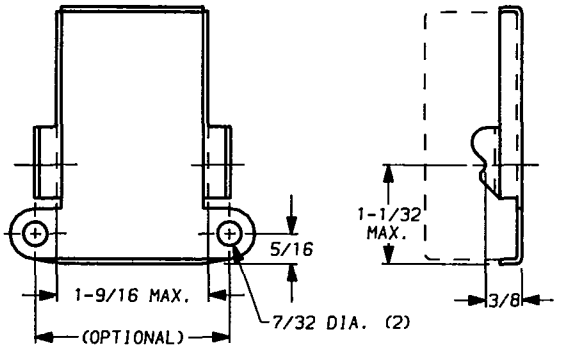

Figure 3-1
CONTROL BASE
(Typical Outline of Control Base to Illustrate Required Dimensions)

3.2 MOUNTING METHOD

Means shall be provided to permit mounting the control either directly on the water heater tank or on a flat metal pad attached to the tank.

3.3 MOUNTING MEANS

Means shall be provided to enable Type A, B, and C controls to be secured to the water heater tank either by screws or by mounting such as shown in Figure 3-2.

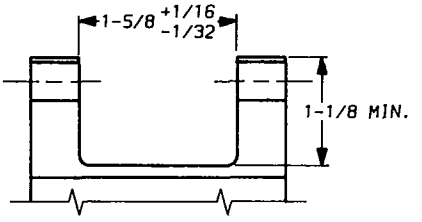

Figure 3-2
DIMENSIONS FOR MOUNTING BRACKET TABS

The projection of the thermostat shall be contained within the cavity of the mounting bracket base, as shown by the dotted line envelope in Figure 3-1.

NEMA Standard 11-16-1989.

Type D and E controls may be combined with the regulating control.

Authorized Engineering Information 11-16-1989.

3.4 TERMINAL MARKINGS

Terminal markings shall be as follows:

Type of Controls	Switch Action	Terminal Marking	Switch Schematic
A	Contacts open on temperature rise	1 and 2	1 o/ o 2
B	Contacts open on temperature rise	1 and 2	1 o/ o 2
	Contacts close on temperature rise	3 and 4	o o 3 4
C	Contacts open on temperature rise	1 and 2	o 2
	Contacts close on temperature rise	1 and 4	1 o/...o 4
D	Contacts open on temperature rise	1 and 2	1 o o 2
	Contacts open on temperature rise	3 and 4	3 o o 4
E	Contacts open on temperature rise	1 and 2	1 o o 2

Copyright National Electrical Manufacturers Association
Provided by IHS under license with NEMA
No reproduction or networking permitted without license from IHS
Not for Resale

Section 4
PERFORMANCE AND RATINGS

4.1 PERFORMANCE AND RATINGS

Controls shall comply with ANSI/UL 873 and ANSI/UL 174.

Copyright National Electrical Manufacturers Association
Provided by IHS under license with NEMA
No reproduction or networking permitted without license from IHS
Not for Resale

NEMA STANDARDIZATION

The purpose of NEMA Standards, their classification and status, are set forth in certain clauses of the NEMA *Standardization Policies and Procedures* manual and are referenced below.

Purpose of Standards

National Electrical Manufacturers Association standards are adopted in the public interest and are designed to eliminate misunderstandings between the manufacturer and the purchaser and to assist purchasers in selecting and obtaining the proper product for their particular needs. Existence of a National Electrical Manufacturers Association standard does not in any respect preclude any member or nonmember from manufacturing or selling products not conforming to the standard. *(Standardization Policies and Procedures, p. 1)*

Definition of a Standard

A standard of the National Electrical Manufacturers Association defines a product, process, or procedure with reference to one or more of the following: nomenclature, composition, construction, dimensions, tolerances, safety, operating characteristics, performance, rating, testing, and the service for which they are designed.

(Standardization Policies and Procedures, p. 2)

Dimensions

Where dimensions are given for interchangeability purposes, alternate dimensions satisfying the other provisions of the Standards Publication may be capable of otherwise equivalent performance.

(Standardization Policies and Procedures, p.8)

Categories of Standards

National Electrical Manufacturers Association Standards are of two classes:

1. NEMA Standard, which relates to a product, process, or procedure commercially standardized and subject to repetitive manufacture, which standard has been approved by at least 90 percent of the members of the Subdivision eligible to vote thereon;
2. Suggested Standard for Future Design, which may not have been regularly applied to a commercial product, but which suggests a sound engineering approach to future development, which standard has been approved by at least two-thirds of the members of the Subdivision eligible to vote thereon.

(Standardization Policies and Procedures, pp. 7 & 16)

Authorized Engineering Information

Authorized Engineering Information consists of explanatory data and other engineering information of an informative character not falling within the classification of NEMA Standard or Suggested Standard for Future Design, which standard has been approved by at least two-thirds of the members of the Subdivision eligible to vote on the standard.

(Standardization Policies and Procedures, pp. 7 & 16)

Official Standards Proposal

An Official Standards Proposal is an official draft of a proposed standard which is formally recommended to an outside organization(s) for consideration, comment, and/or approval, and which has been approved by at least 90 percent of the members of the Subdivision eligible to vote thereon.

(Standardization Policies and Procedures, pp. 7 & 16)

Identification of Status

Standards in NEMA Standards Publications are identified in the foreword or following each standard as "NEMA Standard" or "Suggested Standard for Future Design." These indicate the status of the standard. These words are followed by a date which indicates when the standard was adopted in its present form by the Association.

The material identified as "Authorized Engineering Information" and "Official Standards Proposal" is designated similarly.

Copyright National Electrical Manufacturers Association
Provided by IHS under license with NEMA
No reproduction or networking permitted without license from IHS
Not for Resale

RESIDENTIAL CONTROLS SECTION
OF THE
NATIONAL ELECTRICAL MANUFACTURERS ASSOCIATION

MEMBER COMPANIES

APCOM, Inc.
Franklin, TN 37064

Eaton Corporation
Controls Division
Carol Stream, IL 60187

Emerson Electric Company
White-Rodgers Division
St. Louis, MO 63123

GE
Morrison, IL 61270

GTE Products Corporation
Control Device Operation
Standish, ME 04084

Hamilton Standard Controls, Inc.
Fort Wayne, IN 46859

Honeywell, Inc.
Minneapolis, MN 55422

Johnson Controls, Incorporated
Control Products Division
Milwaukee, WI 53209

Kidde-Fenwal, Incorporated
Ashland, MA 01721

Mallory Timers Company
Div. of Emhart Industries, Inc.
Indianapolis, IN 46206

Ranco, Inc.
Plain City, OH 43064

Robertshaw Controls Company
Richmond, VA 23261

Texas Instruments, Inc.
Attleboro, MA 02703

Thermo-O-Disc
Sub. of Emerson Electric Co.
Mansfield, OH 44907

Copyright National Electrical Manufacturers Association
Provided by IHS under license with NEMA
No reproduction or networking permitted without license from IHS
Not for Resale