NEMA Standards Publication CP 1-2000

Shunt Capacitors

Published by:

National Electrical Manufacturers Association
1300 North 17th Street
Rosslyn, VA 22209

© Copyright 2001 by the National Electrical Manufacturers Association. All rights including translation into other languages, reserved under the Universal Copyright Convention, the Berne Convention for the Protection of Literary and Artistic Works, and the International and Pan American Copyright Conventions.

Copyright National Electrical Manufacturers Association
Provided by IHS under license with NEMA
No reproduction or networking permitted without license from IHS
Not for Resale

NOTICE AND DISCLAIMER

The information in this publication was considered technically sound by the consensus of persons engaged in the development and approval of the document at the time it was developed. Consensus does not necessarily mean that there is unanimous agreement among every person participating in the development of this document.

NEMA standards and guideline publications, of which the document contained herein is one, are developed through a voluntary consensus standards development process. This process brings together volunteers and/or seeks out the views of persons who have an interest in the topic covered by this publication. While NEMA administers the process and establishes rules to promote fairness in the development of consensus, it does not write the document and it does not independently test, evaluate, or verify the accuracy or completeness of any information or the soundness of any judgments contained in its standards and guideline publications.

NEMA disclaims liability for any personal injury, property, or other damages of any nature whatsoever, whether special, indirect, consequential, or compensatory, directly or indirectly resulting from the publication, use of, application, or reliance on this document. NEMA disclaims and makes no guaranty or warranty, express or implied, as to the accuracy or completeness of any information published herein, and disclaims and makes no warranty that the information in this document will fulfill any of your particular purposes or needs. NEMA does not undertake to guarantee the performance of any individual manufacturer or seller's products or services by virtue of this standard or guide.

In publishing and making this document available, NEMA is not undertaking to render professional or other services for or on behalf of any person or entity, nor is NEMA undertaking to perform any duty owed by any person or entity to someone else. Anyone using this document should rely on his or her own independent judgment or, as appropriate, seek the advice of a competent professional in determining the exercise of reasonable care in any given circumstances. Information and other standards on the topic covered by this publication may be available from other sources, which the user may wish to consult for additional views or information not covered by this publication.

NEMA has no power, nor does it undertake to police or enforce compliance with the contents of this document. NEMA does not certify, test, or inspect products, designs, or installations for safety or health purposes. Any certification or other statement of compliance with any health or safety–related information in this document shall not be attributable to NEMA and is solely the responsibility of the certifier or maker of the statement.

Copyright National Electrical Manufacturers Association
Provided by IHS under license with NEMA
No reproduction or networking permitted without license from IHS
Not for Resale

CONTENTS

Foreword iii

Section 1 REFERENCED STANDARDS AND DEFINITIONS

1.1 Scope 1
1.2 Referenced Standards 1
1.3 Definitions 1

Section 2 SERVICE CONDITIONS

2.1 General 5
2.2 Altitude 5
2.3 Ambient Temperature 5
2.3.1 Maximum Ambient Temperature 5
2.3.1 Minimum Ambient Temperature 5
2.4 Determination of Ambient Temperature 5
2.5 Mounting and Installation of Capacitors and Equipments 6
2.5.1 Position 6
2.5.2 Arrangements 6
2.5.3 Unusual Installation Requirements 6
2.6 Working Voltages 7
2.7 Maximum Working Voltage 7
2.8 Maximum Reactive kVAR 7
2.9 Unusual Service Conditions 7

Section 3 RATING STANDARDS

3.1 Basis of Rating 9
3.2 Frequency 9

Section 4 MANUFACTURING STANDARDS

4.1 Capacitor Terminals 11
4.2 Provision for Making Connections to Capacitor Equipment 11
4.3 Discharge Devices 11
4.4 Dimensions 11
4.4.1 Mounting Hole Spacings 11
4.4.2 Upright Non-Enclosed Substation Equipment 12
4.4.3 Horizontal Non-Enclosed Substation Equipment 12
4.5 Nameplate Marking for Capacitors 13
4.6 Nameplate Marking for Racks and Housings or Capacitor Equipments 14
4.7 Capacitor Bushings 15
4.7.1 Operation 15
4.7.2 Test Conditions 15
4.7.3 Voltage Measurements 16
4.8 Circuit Breakers, Contactors, and Disconnecting Devices 17
4.8.1 Standards 17
4.8.2 Ratings 17
4.8.3 Application 17
4.9 Automatic Switching of Capacitors 17
4.9.1 Control 17
4.9.2 Capacitor Switching Device 18

Copyright National Electrical Manufacturers Association
Provided by IHS under license with NEMA
No reproduction or networking permitted without license from IHS
Not for Resale

4.9.3 Control Enclosure 18
4.9.4 Voltage Control-Single Step 18
4.9.5 Voltage Control-Multistep 18
4.9.6 Current Control-Single Step 18
4.9.7 Kilovar Control-Single Step 19
4.9.8 Kilovar Control-Multistep 19

Section 5 TESTING STANDARDS

5.1 General 21
5.1.1 Design (Type) Tests 21
5.1.2 Routine (Production) Tests 21
5.2 Test Conditions 21
5.3 Design (Type) Tests 21
5.4 Routine (Production) Tests 21
5.5 Impulse Withstand Test-Case Insulation (Design Tests) 21
5.6 Thermal Stability Test (Design Test) 22
5.6.1 Selection of Samples 22
5.6.2 Test Method 22
5.7 Radio Influence Voltage (Design Test) 23
5.7.1 Equipment 23
5.7.2 Test Voltages 23
5.7.3 Method of Test 24
5.7.4 Precautions in Making Tests 24
5.7.5 RIV Limits 24
5.8 Voltage Decay Test (Design Test) 24
5.9 Short-Time Overvoltage Tests (Routine Test) 24
5.9.1 Terminal-to-Terminal Tests 24
5.9.2 Terminal-to-Case Tests 25
5.10 Capacitance Test (Routine Test) 25
5.11 Loss Test (Routine Test) 25
5.12 Discharge Resistor Test (Routine Test) 25
5.13 Leak Test (Routine Test) 25

Section 6 GUIDE FOR THE APPLICATION AND OPERATION OF SHUNT CAPACITORS

6.1 General 27
6.2 Reliability 27
6.3 Overvoltage Limits and Protection 27
6.4 Operating and Ambient Temperatures 29
6.5 Abnormal Overload Current 30
6.6 Inspection and Maintenance 30
6.7 Field Test on Capacitors 31
6.7.1 Tests on Capacitors After Placement in Service 31
6.7.2 Handling of Failed Capacitors 32
6.8 Fusing Guidelines 32
6.8.1 General 32
6.8.2 Fuse Current Rating 32
6.8.3 Fuse Voltage Rating 32
6.8.4 Fuse Interrupting Rating 33
6.8.5 Stored-Energy Transients 33
6.8.6 Capacitor Protection Schemes 34
6.8.7 Maximum Inductive Fault Currents 34
6.8.8 Application Information 36

Copyright National Electrical Manufacturers Association
Provided by IHS under license with NEMA
No reproduction or networking permitted without license from IHS
Not for Resale

Foreword

The requirements in this Standards Publication are intended to reflect the latest standards affecting these products. They are made available as a guide for the manufacturer and to assist the purchaser in selecting and obtaining a suitable product. This Standards Publication applies to capacitors designed for shunt connections to alternating-current power transmission and distribution systems operating at frequencies of 50 or 60 hertz and below. The use of these standards is at the option of the individual manufacturer and the purchaser. It is anticipated that those who utilize them will derive benefit from the advantages of functional interchangeability. To assure a meaningful publication, copies were sent during the draft stage to a number of individuals and organizations in the public and private sector having an interest in or responsibility for the purchase, testing, application, use, or inspection of this product category. The resulting comments and suggestions provided a vital user and general interest input to final NEMA approval and resulted in a number of substantive changes being made in this publication.

This Standards Publication duplicates the requirements of the American National Standard for Shunt Power Capacitors ANSI/IEEE 18-1992. Additional requirements are also covered, but they are not intended to conflict with ANSI/IEEE 18-1992.

These standards are periodically reviewed by the Capacitor Section of NEMA for any revisions necessary to keep them up to date with advancing technology. As future major revisions to this publication are proposed, it is intended to offer to both individuals and organizations in the public and private sector a further opportunity to participate in the development of this publication.

Proposed or recommended revisions should be submitted to:

Vice President, Engineering Department
National Electrical Manufacturers Association
1300 North 17th Street, Suite 1847
Rosslyn, VA 22209

At the time of publication, the member companies of the Capacitor Section are as follows:

ABB Inc.—Quebec City, PQ
GE Industrial Systems—Fort Edward, NY
Cooper Power Systems—Franksville, WI

Copyright National Electrical Manufacturers Association
Provided by IHS under license with NEMA
No reproduction or networking permitted without license from IHS
Not for Resale

--`,,`,,`-`-`,,`,,`,`,,`---

Copyright National Electrical Manufacturers Association
Provided by IHS under license with NEMA
No reproduction or networking permitted without license from IHS

Not for Resale

Section 1
REFERENCED STANDARDS AND DEFINITIONS

1.1 SCOPE

This standard applies to capacitors rated 216 V or higher, 2.5 kVAR or more, and designed for shunt connection to alternating current transmission and distribution systems operating at a nominal frequency of 50 or 60 Hz.

The values stated in U.S. customary units are to be regarded as the standard.

1.2 REFERENCED STANDARDS

American National Standards Institute
11 West 42nd Street
New York, N.Y. 10036

ANSI/IEEE 18-1992	*Standard for Shunt Power Capacitors*
ANSI/IEEE 100-1992	*Dictionary of Electrical and Electronic Terms*
ANSI/IEEE 1036-1992	*Guide for Application of Shunt Power Capacitors*
ANSI C37.30-1998 (IEEE 324-1971)	*Definitions and Requirements for High Voltage Air Switches, Insulators and Bus Supports*
ANSI/IEEE 21-1976	*General Requirements and Test Procedures for Outdoor Apparatus Bushings, Part 1*

National Electrical Manufacturers Association
1300 North 17th Street, Suite 1847
Rosslyn, VA 22209

ICS 2-1993 (R2000)	Industrial Controls and Systems: *Controllers, Contactors and Overload Relays, Rated Not More Than 2000 Volts AC or 750 Volts DC*
107-1993	*Methods of Measurement of Radio Influence Voltage (RIV) of High Voltage Apparatus*

National Fire Protection Association
Batterymarch Park
Quincy, MA 02269

NFPA 70-1999	*National Electrical Code*

1.3 DEFINITIONS

Unless listed below, definitions shall be as shown in ANSI/IEEE 18 or in ANSI/IEEE 100.

ambient temperature: The temperature of the surrounding cooling medium, usually air, which comes into contact with the heated parts of the apparatus.

--`,,`-`-`,,`,,`,`,,`---

Copyright National Electrical Manufacturers Association
Provided by IHS under license with NEMA
No reproduction or networking permitted without license from IHS
Not for Resale

capacitor: An assembly of a dielectric and electrodes in a container with the terminals brought out, the primary purpose of which is to introduce capacitance into an electric circuit.

capacitor bank: Two or more capacitors in one location, either under one control or separate controls.

capacitor bus: The conductor that serves as a common connection between the connectors from the capacitors and the line.

capacitor connectors: Devices used to connect capacitors to the capacitor bus.

capacitor equipment: A complete assembly of capacitors, including accessories such as buses, connectors, dischargers, fuses, switching devices, and controls, suitable for connection to a circuit.

capacitor hanger: An open framework for mounting one or more capacitors from crossarms, poles, walls or ceilings.

connection diagram: A diagram that shows the connections of an installation or its component devices, controllers and equipment. It covers internal or external connections, or both, and shall contain such detail as is needed to make or trace connections that are involved.

A connection diagram excludes mechanical drawings, such as wiring templates, wiring assemblies, and cable assemblies.

The connection diagram shows the general physical arrangement of devices and device elements with accessory items such as terminal blocks, resistors, and such.

discharger: A device connected across the terminal of a capacitor or buses or built into the capacitor, which reduces the residual voltage after the capacitor is disconnected from the line.

enclosed capacitor: A capacitor with enclosed terminals, which is provided with means for connection to a conduit.

floating neutral: One whose voltage to ground is free to vary when circuit conditions change.

fused capacitor: A capacitor with fuses mounted either on its terminals, inside a terminal enclosure, or inside the capacitor container.

illustrative diagram: A diagram that principally shows the operating principal of a device or a group of devices without necessarily showing actual connections or circuits. Illustrative diagrams use pictures or symbols to illustrate or represent devices or their elements.

Illustrative diagrams show electric, hydraulic, pneumatic and combinations systems. They are applicable chiefly to instruction books, descriptive folders, or other mediums whose purpose is to explain or to instruct.

indoor: As a prefix, indicates that the apparatus is suitable for indoor service only.

metal-enclosed or housed equipment: Capacitor equipment enclosed in a metal enclosure or metal house to prevent accidental contact with live parts.

non-enclosed capacitor: A capacitor not provided with an individual enclosure for the terminals.

one-line (or single-line) diagram: A diagram which, by means of single lines and simplified symbols, indicates the route and component devices, or parts of an electric circuit, or system of circuits. Physical

Copyright National Electrical Manufacturers Association
Provided by IHS under license with NEMA
No reproduction or networking permitted without license from IHS
Not for Resale

relationships are usually disregarded. One-line (or single-line) diagrams are useful in showing the overall relations between component devices and circuit, and between circuits.

outdoor: As a prefix, indicates that the apparatus is suitable for outdoor service. A capacitor or equipment is designed as dust-, weather-, and such, when so constructed, protected, or treated that its successful operation is not interfered with when subjected to the specified material or condition.

rack: A structure that supports the capacitors.

rack equipment: Capacitor equipment without enclosing plates or screens.

schematic or elementary diagram: A diagram showing all circuits and device elements of an equipment and its associated apparatus or any clearly defined functional portion thereof. Such a diagram emphasizes the device elements of a circuit and their functions as distinguished from the physical arrangement of the conductors, devices, or device elements of a circuit system.

To emphasize the device elements and show their functional relationships and sequence, physical relationships of devices and device elements are disregarded. Circuits are drawn in the most direct possible line between and perpendicular to parallel lines representing opposite polarities of voltage sources, and circuits which function inherently in a definite sequence are arranged to indicate that sequence.

Schematic or elementary diagrams are used to indicate electrical relationships of circuits and device elements.

var: The unit of reactive power and is the product of the root mean square (rms) voltage, the rms current, and the sine of the angle between. Since capacitor current leads its voltage by 90 degrees, the sine is unity and the reactive power is the voltage times capacitor current.

Copyright National Electrical Manufacturers Association
Provided by IHS under license with NEMA
No reproduction or networking permitted without license from IHS
Not for Resale

Copyright National Electrical Manufacturers Association
Provided by IHS under license with NEMA
No reproduction or networking permitted without license from IHS
Not for Resale

Section 2
SERVICE CONDITIONS

2.1 GENERAL

For additional information on service conditions, see Section 6.

2.2 ALTITUDE

Capacitors shall be suitable for operation at altitudes not exceeding 6,000 feet (1,800 meters) above sea level. (See 4.7)

Although the capacitor requires no derating up to 6,000 feet (1,800 meters), other insulation in an equipment may require derating above 3,300 feet (1,000 meters) as specified in ANSI/IEEE C37.30.

2.3 AMBIENT TEMPERATURE

Capacitors and equipment shall be suitable for switched or continuous operation outdoors with unrestricted ventilation when operated within the limits specified in Table 2-1 and when installed in accordance with 2.5.

2.3.1 Maximum Ambient Temperature

Table 2-1
AMBIENT AIR TEMPERATURE
DEGREES CELSIUS

Mounting Arrangements	Average*	24-hour Normal Annual**
Isolated Capacitor	46	35
Single Row of Capacitors	46	35
Multiple Row and Tiers of Capacitors	40	25
Metal-enclosed or Housed Equipment	40	25

* The 24-hour arithmetic average of hourly readings during the hottest day expected at the location.

** As defined in the reports of the U.S. Weather Bureau.

2.3.2 Minimum Ambient Temperature

The minimum allowable ambient temperature shall be -40°C.

For operation at ambients other than those listed in Table 2-1 or in indoor locations with restricted ventilation, see 6.4.

2.4 DETERMINATION OF AMBIENT TEMPERATURE

The ambient temperature shall be determined by taking the average of the readings of three thermometers placed as follows:

a. One level with the top of the equipment or, where included, with the top of the uppermost outlet ventilation opening

Copyright National Electrical Manufacturers Association
Provided by IHS under license with NEMA
No reproduction or networking permitted without license from IHS
Not for Resale

b. One 12 inches above the bottom of the equipment or, where included, level with the center of the lowest inlet ventilation opening

c. One midway between the above two positions

All three thermometers shall be placed 12 inches away horizontally from the equipment and in locations unaffected by drafts caused by the equipment or by other apparatus. These thermometers shall be immersed in a suitable liquid, such as oil, in a heavy metal cup when the ambient temperature is subject to such variations that errors in taking the temperature might result. Also, these thermometers shall be shielded from direct radiation from the sun or other heated surfaces.

2.5 MOUNTING AND INSTALLATION OF CAPACITORS AND EQUIPMENT

2.5.1 Position

Capacitors shall be designed for normal mounting in a vertical or horizontal position with the entrance bushings at the top, except where other mountings are specifically recommended by the manufacturer.

2.5.2 Arrangements

Racks and housings shall have provision for mounting individual capacitors in one, two, or three tiers, with no more than two rows of capacitors per tier. Enclosures having one row of capacitors per tier shall be accessible from one side only; those having two rows per tier shall be accessible from two opposite sides.

The horizontal spacing, center to center, between capacitors in a metal-enclosed equipment shall be sufficient to provide for the circulation of cooling air and to provide ample clearances between live parts during normal operation or with a short-circuited individual capacitor and a blown fuse.

The bottom tier of capacitors in all racks or housing shall be sufficiently above the level of the base to permit unrestricted ventilation.

The top of indoor capacitor equipment shall be sufficiently below the ceiling to permit unrestricted ventilation and to avoid pocketing the equipment in dead air.

2.5.3 Unusual Installation Requirements

Unusual conditions may require a variation from the installations described in 2.5.1 and 2.5.2 and should be brought to the attention of the manufacturer for special consideration and recommendations. Among such unusual conditions are:

a. Limited floor space requiring:
    1. More than three tiers
    2. More than two rows of capacitors per tier
    3. Restricted aisle space for accessibility
    4. Limited physical entrance requirements for installation

c. Rooms not having normal ventilation, rooms containing other apparatus radiating heat, or rooms with unusual configurations or partitions causing hot air pockets

d. Unusual dust or other conditions causing the partial obstruction of ventilation

e. Severe vibration of the foundation on which the capacitor is supported

f. Open supporting foundation requiring enclosed or screened bottom for capacitor equipments

g. Unusual lead entrance requirements

Copyright National Electrical Manufacturers Association
Provided by IHS under license with NEMA
No reproduction or networking permitted without license from IHS
Not for Resale

2.6 WORKING VOLTAGES

Capacitors shall be suitable for use on line-to-line circuit voltages corresponding to their ratings and for use on line-to-neutral voltages corresponding to their ratings on solidly grounded neutral circuits.

Capacitors shall be suitable for operation at a terminal-to-terminal voltage (rms including harmonics) of 110 percent of rated voltage (exclusive of transients).

2.7 MAXIMUM WORKING VOLTAGE

The maximum continuous working voltage of capacitors shall be 110 percent of the rated voltage rms provided that the crest voltage including all harmonics does not exceed $1.2 \times \sqrt{2}$ times rated voltage.

It is recognized that during switching, sudden loss of load and the like, the voltage of a system may rise momentarily above the maximum working voltage, but there is no provision for this contingency other than the factor of safety introduced by the test voltage (see 6.3).

2.8 MAXIMUM REACTIVE KVAR

Capacitors shall be suitable for continuous operation at 135 percent of rated reactive power. This maximum reactive power shall include the following factors, the combined effects of which shall not exceed 135 percent.

a. Reactive power due to voltage in excess of nameplate rating at fundamental frequency but within the permissible voltage limitations described in 2.7

b. Reactive power due to harmonic voltages superimposed on the fundamental frequency

c. Reactive power in excess of nameplate rating due to manufacturing tolerance within the limits specified in 3.1

2.9 UNUSUAL SERVICE CONDITIONS

Unusual service conditions may require special construction or operation, and these should be brought to the attention of those responsible for the manufacture and application of the equipment. Among such unusual conditions are:

a. Operation at altitudes above 6,000 feet (1,800 meters) above sea level (see 4.7)

b. Ambient temperatures higher or lower than those specified in 2.3 or exposure to sudden changes in temperature or to radiated heat from surfaces whose temperature is higher than the applicable ambient temperature. Excessive ambient temperatures may be encountered in rooms not having normal ventilation or with unusual configurations or partitions causing hot air pockets, or in rooms containing other heat-producing apparatus (see 6.4)

c. Exposure to salt air, damaging fumes or vapors, steam, excessive moisture, or dripping water

d. Exposure to excessive, abrasive, or conductive dust

e. Exposure to explosive mixtures of dust or gases

f. Exposure to severe weather conditions

g. Exposure to abnormal vibration, shocks, or tilting

h. Unusual transportation or storage conditions

i. Unusual space limitations

j. Unusual insulation or voltage requirements

k. Unusual operating duty, frequency of operation or difficulty of maintenance

l. Operation at unstable control voltages

Copyright National Electrical Manufacturers Association
Provided by IHS under license with NEMA
No reproduction or networking permitted without license from IHS
Not for Resale

m. Unusual wave form distortion or harmonics causing excessive current, voltage or kVAR loading (see 6.3 and 6.5)

n. Any other unusual or special operating requirements

--`,,`,,`-`-`,,`,,`,`,,`---

Copyright National Electrical Manufacturers Association
Provided by IHS under license with NEMA
No reproduction or networking permitted without license from IHS

Not for Resale

Section 3
RATING STANDARDS

3.1 BASIS OF RATING

Capacitors shall be rated in kVAR, rms voltage (terminal-to-terminal), frequency, number of phases, and terminals-to-case (ground) basic impulse level (see Table 3-1).

Capacitors shall give not less than the rated reactive power at rated sinusoidal voltage and frequency, and not more than 110 percent of this value, measured at 25° C uniform case and internal temperature.

3.2 FREQUENCY

The capacitors shall be suitable for operation at frequencies of 50 or 60 hertz and below.

Capacitors are not intended for operation at predominant frequencies above rated frequency. Capacitors may be used where higher rated frequency components are present, provided these components do not result in excessive operating current, based on rated kVAR, frequency, and rms voltage and provided the operating kVAR does not exceed the value given in 2.8 (see 6.5).

Table 3-1
VOLTAGE AND KVAR RATINGS FOR 60 HERTZ CAPACITORS

Volts rms (Terminal-To-Terminal)	kVAR	Number of Phases	BIL (kV)*
240	2.5, 5, 7-1/2, 10, 15, 20, 25, and 50	1 and 3	**
480	5, 10, 15, 20, 25, 35, 50, 60, and 100	1 and 3	**
600	5, 10, 15, 20, 25, 35, 50, 60, and 100	1	**
2400	50, 100, 150, and 200	3	75
2400	25, 50, 75, 100, 125, 150, 175, and 200	1	**
2770	50, 100, 150, and 200	3	75
2770	25, 50, 75, 100, 125, 150, 175, and 200	1	**
4160	50, 100, 150, and 200	3	75
4160	25, 50, 75, 100, 125, 150, 175, and 200	1	**
4800	50, 100, 150, and 200	3	75
4800	25, 50, 75, 100, 125, 150, 175, and 200	1	**
6640	50, 100, 150, 200, 300, and 400	1	95
7200	50, 100, 150, 200, 300, and 400	1	95
7620	50, 100, 150, 200, 300, and 400	1	95
7960	50, 100, 150, 200, 300, and 400	1	95
8320	50, 100, 150, 200, 300, and 400	1	95
9540	50, 100, 150, 200, 300, and 400	1	95
9960	50, 100, 150, 200, 300, and 400	1	95

Copyright National Electrical Manufacturers Association
Provided by IHS under license with NEMA
No reproduction or networking permitted without license from IHS
Not for Resale

Table 3-1 (continued)
VOLTAGE AND KVAR RATINGS FOR 60 HERTZ CAPACITORS

Volts rms (Terminal-To-Terminal)	kVAR	Number of Phases	BIL (kV)*
12470	50, 100, 150, 200, 300, and 400	1	95
13280	50, 100, 150, 200, 300, and 400	1	95 and 125
13800	50, 100, 150, 200, 300, and 400	1	95 and 125
14400	50, 100, 150, 200, 300, and 400	1	95 and 125
15125	50, 100, 150, 200, 300, and 400	1	125
19920	100, 150, 200, 300, and 400	1	125
19920†	100, 150, 200, 300, and 400	1	125 and 150
20800†	100, 150, 200, 300, and 400	1	150 and 200
21600†	100, 150, 200, 300, and 400	1	150 and 200
22800†	100, 150, 200, 300, and 400	1	150 and 200
23800†	100, 150, 200, 300, and 400	1	150 and 200
24940†	100, 150, 200, 300, and 400	1	150 and 200

* See 5.5
** Not applicable to indoor or housed equipment
† 1 Bushing

Copyright National Electrical Manufacturers Association
Provided by IHS under license with NEMA
No reproduction or networking permitted without license from IHS
Not for Resale

Section 4
MANUFACTURING STANDARDS

4.1 CAPACITOR TERMINALS

Single-phase capacitors shall have one or two insulated terminals. Three-phase capacitors shall have three or four insulated terminals.

4.2 PROVISION FOR MAKING CONNECTIONS TO CAPACITOR EQUIPMENT

A bushing, cable, or conduit entrance shall be provided for outdoor metal-enclosed capacitor equipment rated above 600 V.

4.3 DISCHARGE DEVICES

Capacitors to be installed under the conditions covered by the *National Electrical Code* shall be provided with a means for reducing the residual voltage in accordance with the requirements. Capacitors connected directly to other electric equipment, which provides a discharge path without having a disconnecting switch, fuse, or cutout interposed shall be considered properly discharged. The discharge circuit shall be permanently connected to the terminals of the capacitor or capacitor bank. Manual or automatic means for switching or connecting the discharge circuit shall not be used.

Capacitors not subject to the requirements of the *National Electrical Code* shall be provided with a means for reducing the residual voltage to 50 volts or less within the following time limits specified in Table 4-1 after the capacitor is disconnected from the source of supply.

Capacitor equipment that is automatically switched shall be provided with a discharge means for reducing the residual voltage to 50 volts or less between one switching operation and the next, unless otherwise recommended by the manufacturer.

The internal discharge device provided in capacitors should not be considered as a substitute for the recommended practice of manually discharging the residual stored charge before working on capacitors. The use of a discharge device is intended to supplement rather than to displace the short-circuiting of a capacitor before handling.

Table 4-1
DISCHARGE TIME LIMITS

Range of Capacitor Voltage Ratings (Terminal-to-Terminal) Volts, rms	Maximum Time Limit
600 volts or less	1 minute
Over 600 volts	5 minutes

4.4 DIMENSIONS

4.4.1 Mounting Hole Spacings

The mounting hole spacings of capacitors rated 50 to 400 kVAR (single phase) and 2400 V or higher shall be 15-5/8 inches $\pm$ 1/16 inch (397.0 mm $\pm$ 1.6 mm) between centers of 7/16 inch (11.1 mm) minimum

Copyright National Electrical Manufacturers Association
Provided by IHS under license with NEMA
No reproduction or networking permitted without license from IHS
Not for Resale

diameter holes. Three phase cantilever mounted capacitors shall accommodate 5/8 inch (15.9 mm) mounting bolts at 18 inches ± 1/16 inch (457.2 mm ± 1.6 mm) between centers.

4.4.2 Upright Non-Enclosed Substation Equipment

Upright non-enclosed substation equipment using 50 kVAR, 100 kVAR, 150 kVAR, 200 kVAR, 300 kVAR and 400 kVAR single-phase capacitors shall be as shown in Figure 4-1.

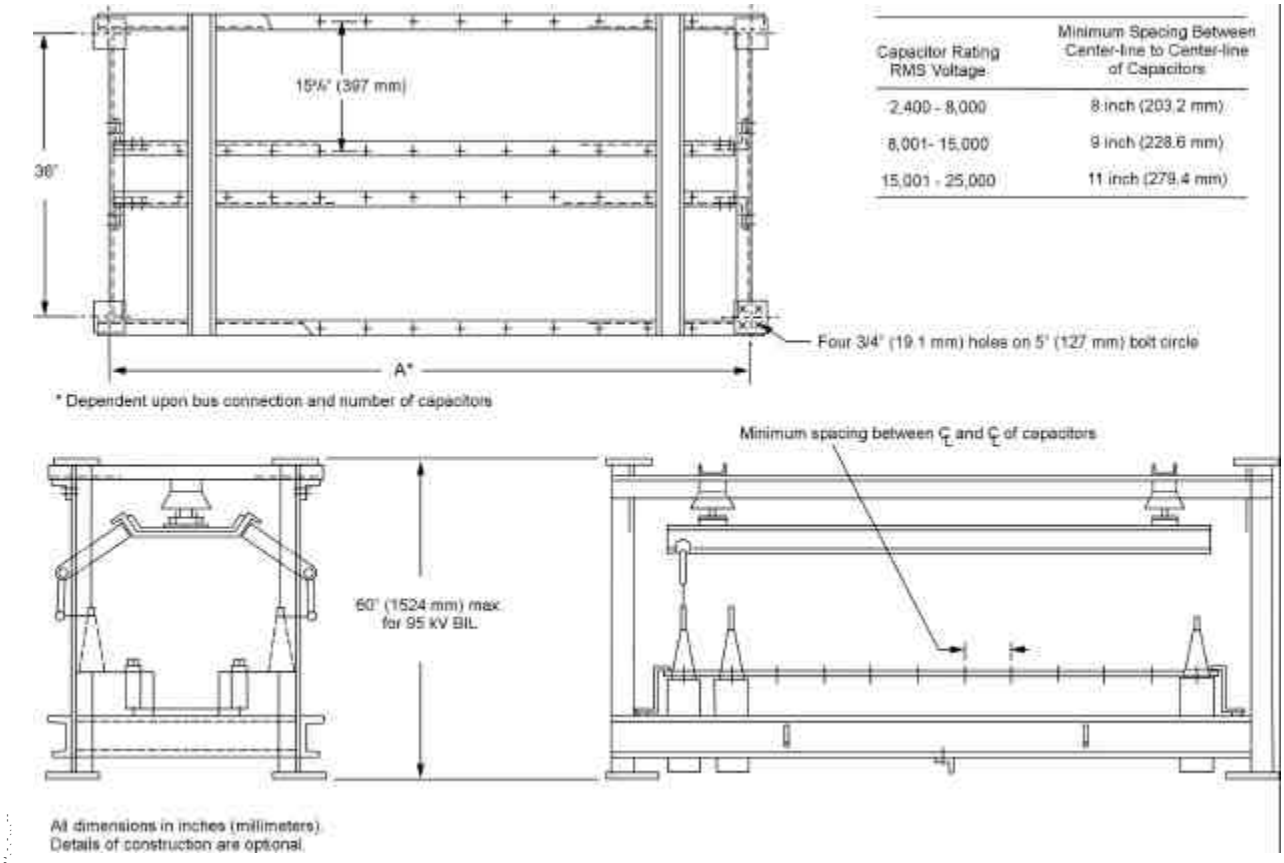

Capacitor Rating RMS Voltage	Minimum Spacing Between Center-line to Center-line of Capacitors
2,400 - 8,000	8 inch (203.2 mm)
8,001 - 15,000	9 inch (228.6 mm)
15,001 - 25,000	11 inch (279.4 mm)

Figure 4-1
DIMENSIONS, MINIMUM SPACING BETWEEN AND OF CAPACITORS

Copyright National Electrical Manufacturers Association
Provided by IHS under license with NEMA
No reproduction or networking permitted without license from IHS
Not for Resale

4.4.3 Horizontal Non-Enclosed Substation Equipment

Horizontal non-enclosed substation equipment using 50 kVAR, 100 kVAR, 150 kVAR, 200 kVAR, 300 kVAR and 400 kVAR single-phase capacitors shall be as shown in Figure 4-2.

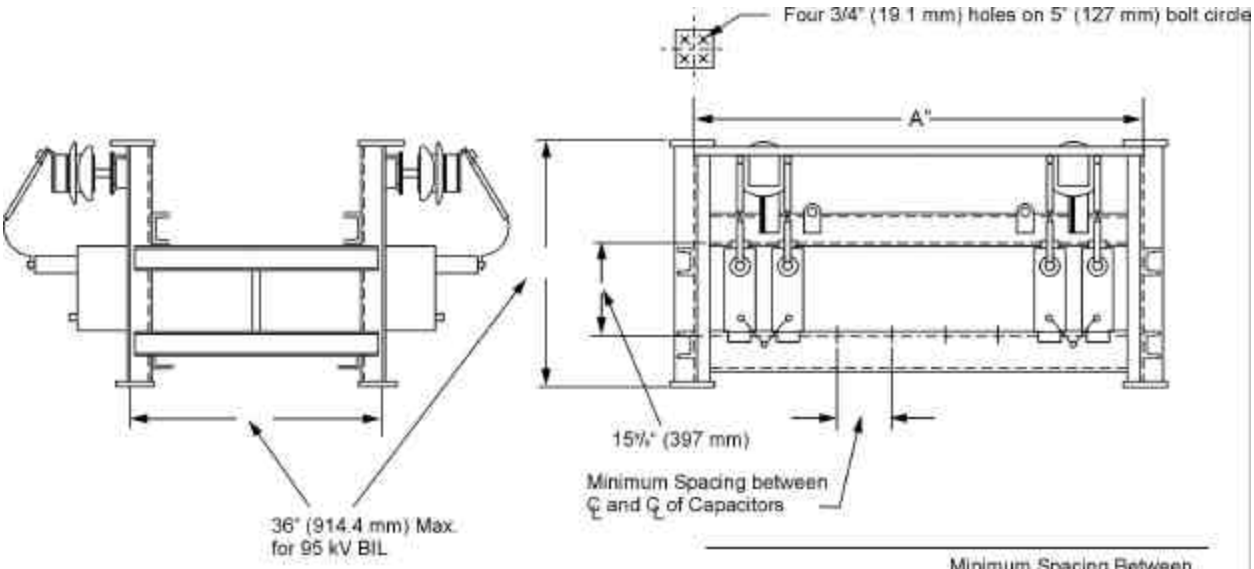

Capacitor Rating RMS Voltage	Minimum Spacing Between Center-line to Center-line of Capacitors
2,400 - 8,000	8 inch (203.2 mm)
8,001- 15,000	9 inch (228.6 mm)
15,001 - 25,000	11 inch (279.4 mm)

* Dependent upon bus connection and number of capacitors

All dimensions in inches (millimeters).
Details of construction are optional.

Figure 4-2
DIMENSIONS, MINIMUM SPACING BETWEEN AND OF CAPACITORS

4.5 NAMEPLATE MARKING FOR CAPACITORS

The following minimum amount of information shall be given on all nameplates for capacitors:

a. Name of manufacturer
b. Identification number or type, model, style, or catalog number
c. Rated kVAR
d. Number of phases*
e. Rated voltage rms*
f. Rated frequency
g. Basic impulse level (see 5.5)
h. Amount of insulating liquid contained if flammable**
i. Statement as to whether or not capacitors have a discharge device inside the case

Copyright National Electrical Manufacturers Association
Provided by IHS under license with NEMA
No reproduction or networking permitted without license from IHS
Not for Resale

j. Year of manufacture

k. Unique serial number (on capacitors rated above 5 kVAR) unless the number is indelibly stamped into the case

l. Liquid impregnant identification

m. Additional marking (decal or stick-on label) shall be visible from the ground. Blue color shall be used to designate Non-PCB

4.6 NAMEPLATE MARKING FOR RACKS AND HOUSINGS OR CAPACITOR EQUIPMENTS

The following minimum amount of information shall be given on all nameplates for racks and housings or capacitor equipments:

a. Name of manufacturer

b. Identification number or type, model, style, or catalog number

c. Rated kVAR

d. Number of phases and connections

e. Rated voltage

f. Rated frequency

Copyright National Electrical Manufacturers Association
Provided by IHS under license with NEMA
No reproduction or networking permitted without license from IHS
Not for Resale

4.7 CAPACITOR BUSHINGS

Bushings of outdoor capacitors shall have the characteristics as shown in Table 4-2.

* For Y-connected capacitors, indicate whether neutral is grounded. For example, 4160 GrdY/2400.
** This information is necessary when capacitors are to be installed under conditions to which the *National Electrical Code* applies.

Table 4-2
BUSHING CHARACTERISTICS

Range of Capacitor Voltage Ratings (Terminal-to-Terminal) Volts, rms	Minimum Insulation Creepage Distance Inches*	60-hertz Dry 1 Minute kV rms	60-hertz Wet 10 Seconds, kV rms	Impulse 1.2 × 50 (or 1.5 × 40) Micro-seconds Full Wave kV Crest
216–1,199	2 (50.8 mm)	10	6	30**
1,200–5,000	5-1/2 (139.7 mm)	27	24	75**
5,000–15,000	10 (254.0 mm)	35	30	95
13,200–20,000	16 (406.4 mm)	42	36	125
20,000–25,000	17 (431.8 mm)	60	50	150
20,000–25,000	26 (660.4 mm)	80	75**	200

Withstand test voltages are for standard temperature and humidity at mean sea level

* At elevations higher than 6,000 ft. (1,800 m) above sea level, additional insulation may be required to prevent bushing flashovers or excessive leakage current

** Not applicable to indoor or housed equipment

4.7.1 Operation

Bushings shall be suitable for operation at altitudes up to 6,000 feet (1,800 m) above sea level.

4.7.2 Test Conditions

4.7.2.1 Test Procedure

Bushings shall be tested in accordance with the procedure described in ANSI C76.1.

4.7.2.2 Standard Conditions

Standard atmospheric and precipitation conditions shall be:

Air Temperature	77° F (25° C)
Barometric Pressure	29.92 inches (760 mm) of mercury
Humidity-vapor Pressure	0.6085 inch (15.46 mm) of mercury
Water Resistivity	7,000 ohm-inches (178 ohm-meters)
Rate of Precipitation	0.2 inch (5 mm) per minute
Angle of Precipitation	45 degrees

4.7.2.3 Correction Factor (D) for Variation in Air Density

The air temperature at the time of the test shall be between 50° F and 104° F (10° C and 40° C).

Copyright National Electrical Manufacturers Association
Provided by IHS under license with NEMA
No reproduction or networking permitted without license from IHS
Not for Resale

The correction factor for the variation in air density is determined as follows:

$$D = \frac{18B}{459 + F}$$

Where:

D = Correction factor
B = Barometric pressure in inches of mercury
F = Temperature in degrees Fahrenheit

This correction is applicable (standard test voltage multiplied by D) only on the 60 Hz wet and impulse withstand test.

4.7.2.4 Correction Factor (H) for Variation in Vapor Pressure

Humidity—For 60 Hz dry 1-minute withstand tests and for 60 Hz wet withstand tests, no correction shall be made for variation in humidity.

For impulse-withstand tests, the applied voltage shall be the standard voltage divided by the humidity correction factor in Table 4-3.

Table 4-3
HUMIDITY CORRECTION FACTORS

Vapor Pressure Inches of Mercury	Humidity Correction Factor
0.0 (0.0 mm)	1.153
0.1 (2.5 mm)	1.127
0.2 (5.0 mm)	1.100
0.3 (7.6 mm)	1.075
0.4 (10.1 mm)	1.050
0.5 (12.7 mm)	1.025
0.6 (15.2 mm)	1.000
0.7 (17.7 mm)	0.981
0.8 (20.3 mm)	0.961
0.9 (22.8 mm)	0.944
1.0 (25.4 mm)	0.929

The vapor pressure at the time of test should be between 0.3 (7.62 mm) and 0.7 inches (17.78 mm) of mercury.

4.7.3 Voltage Measurements

The 50 or 60-Hz withstand test voltage shall be applied under the conditions given in ANSI C76.1 and shall not cause any flashover.

The impulse withstand test voltage shall be applied three times under the conditions specified. If any one but not more than one of these three applications causes flashover, three additional impulses shall be applied. If flashover does not occur, the bushings shall be considered as having met the test.

Copyright National Electrical Manufacturers Association
Provided by IHS under license with NEMA
No reproduction or networking permitted without license from IHS
Not for Resale

4.8 CIRCUIT BREAKERS, CONTACTORS, AND DISCONNECTING DEVICES

Circuit breakers or contactors for use with capacitors may be supplied as:

a. A separate item

b. Part of the capacitor equipment

c. Part of or an addition to existing metal-clad switchgear

4.8.1 Standards

Contactors rated 600 volts and less shall be in accordance with the applicable provisions of Part 7 of NEMA Standards Publication ICS 2.

For application information on molded case circuit breakers and other standard information, the manufacturer shall be consulted.

4.8.2 Ratings

Circuit breakers, disconnecting devices, and all current-carrying parts shall have a voltage rating adequate for the circuit to which they are to be applied. The current rating shall be at least 135 percent of the rated current of the capacitor, except that fusible safety switches shall have a current rating which is at least 165 percent of the rated capacitor current. The momentary rating of the switching device shall be sufficient for fault or inrush current and the interrupting rating, if required, shall be sufficient to handle the short-circuit duty of the system.

Where the operating current exceeds 135 percent of rated current due to harmonic components, service conditions shall permit the selection of circuit breakers and disconnecting devices with higher current ratings.

When supplied as a part of the capacitor equipment, the cables or bus work connecting the circuit breaker, contactor or disconnecting devices to the power entrance terminals and to the capacitor rack bus work shall have a momentary rating equal to that of the switching device.

4.8.3 Application

When mounted separately from the capacitor equipment, circuit breakers and disconnecting devices shall take into consideration the special duty requirements of capacitor service.

When mounted as a part of the capacitor equipment, disconnecting devices shall have adequate clearances between live parts and the grounded structure.

Automatic circuit breakers shall be provided with three overcurrent trips (two for two-phase), one for each phase line. Sufficient time delay or range of setting shall be available in the overcurrent tripping means to avoid tripping due to capacitor inrush current. Tripping current transformers shall have a current rating equal to at least 135 percent of rated current of the capacitor and a momentary rating equal to at least 160 percent of the interrupting capacity of the circuit breaker.

4.9 AUTOMATIC SWITCHING OF CAPACITORS

4.9.1 Control

The control will normally consist of the master element, time-delay relays and the necessary auxiliary devices.

Time-delay relays should allow sufficient time to prevent unnecessary switching operations due to momentary disturbances on the power circuit.

Copyright National Electrical Manufacturers Association
Provided by IHS under license with NEMA
No reproduction or networking permitted without license from IHS
Not for Resale

Such a control normally includes control switches to permit the opening and closing of each capacitor switch by manual operation of its control switch or to have the capacitor switches open and close in response to the master element. This control may be supplied in the following arrangements:

a. Separate indoor cabinet

b. Separate outdoor cabinet

c. With breaker or contactor in indoor cubicle

d. With breaker or contactor in outdoor cubicle

e. With breaker or contactor and capacitor in indoor rack or housing

f. With breaker or contactor and capacitor in outdoor rack or housing

For safety reasons, a fused potential transformer or control power transformer, where required, shall not be located in the low-voltage control compartment but shall be incorporated with the switch device or the capacitor or both. In all other cases, the control shall be operated from the purchaser's auxiliary power circuits. The control voltage shall be either 115 or 230 volts alternating current. Fuse protection for this circuit shall be included.

4.9.2 Capacitor Switching Device

A capacitor switching device shall be supplied for separate mounting in a cubicle with the control or as an integral part of the capacitor. The switching device shall be selected for proper voltage, current repetitive duty, interrupting capacity, or momentary rating or a combination of all of these. Lockout protection against reclosing on a fault shall be provided when automatic overcurrent trip is provided on the switching device.

4.9.3 Control Enclosure

If the control is included in the capacitor rack or housing, it shall be in a separate compartment or adequately barriered or metal-enclosed to protect operating personnel from the high voltages of the power circuit at all times.

4.9.4 Voltage Control-Single Step

Single-step voltage control shall include a voltage-sensitive relay plus time-delay and auxiliary relays which operate to open and close the capacitor switching device in response to predetermined values of circuit voltage which persist for the required time. The voltage-sensitive relay shall be adjustable over a range of 90 to 110 percent of the 115-volt base. Unless otherwise specified, the band width shall be made readily adjustable from 3 to 7-1/2 percent.

4.9.5 Voltage Control-Multistep

Multistep voltage control shall be similar to single step control except that it shall be arranged to switch two or more capacitors selectively and automatically in response to predetermined values of circuit voltage that persist for the required time. The voltage-sensitive relay shall be adjustable over a range of 90 to 110 percent of the 115-volt base. Unless otherwise specified, the bandwidth shall be made readily adjustable from 2.0 to 7.5 percent.

4.9.6 Current Control-Single Step

Single-step current control shall include a current-sensitive relay plus time-delay and auxiliary relays which operate to open and close the capacitor switch in response to predetermined values of load current which persist for the required time. The current-sensitive relay shall be adjustable over a range of 25 to 100 percent of the coil rating. The current transformer for the load circuit shall not be included with the control.

Copyright National Electrical Manufacturers Association
Provided by IHS under license with NEMA
No reproduction or networking permitted without license from IHS
Not for Resale

4.9.7 Kilovar Control-Single Step

Single-step kilovar control shall include a reactive kVAR-sensitive relay plus time-delay and auxiliary relays that operate to open and close the capacitor-switching element in response to predetermined values of kilovars that persist for the required time. The kilovar relay shall be energized from current and potential transformers. The current coils of the relay shall have continuous rating of at least 4 amperes, 60 hertz, and the potential coils shall be rated 115 volts, 60 hertz.

The kilovar relay shall provide adequate adjustment when used with current transformers having a rating up to 125 percent of the maximum load and when used with voltage transformers to provide nominally 115 volts for the potential winding. Current transformers for the load circuit shall not be included in the control.

4.9.8 Kilovar Control-Multistep

Multistep kilovar control shall be similar to single-step kilovar control except that it shall be so arranged as to switch two or more capacitors selectively and automatically in response to predetermined values of desired kilovars which persist for the required time. The kilovar relay shall be energized from current and potential transformers. The current coils of the relay shall have a continuous rating of at least 4 amperes, 60 hertz, and the potential coils shall be rated 115 volts, 60 hertz.

The kilovar relay shall provide adequate adjustment when used with current transformers having a rating up to 125 percent of the maximum load and when used with voltage transformers to provide nominally 115 volts for the potential winding. Current transformers for the load circuit shall not be included in the control.

--`,,`,,`-`-`,,`,,`,`,,`---

Copyright National Electrical Manufacturers Association
Provided by IHS under license with NEMA
No reproduction or networking permitted without license from IHS
Not for Resale

Copyright National Electrical Manufacturers Association
Provided by IHS under license with NEMA
No reproduction or networking permitted without license from IHS
Not for Resale

Section 5
TESTING STANDARDS

5.1 GENERAL

Capacitor tests are designed as either design or routine tests.

5.1.1 Design (Type) Tests

The following design type tests shall be conducted:

a. Impulse Withstand Test (see 5.5)

b. Thermal Stability Test (see 5.6)

c. Radio Influence Voltage (see 5.7)

d. Voltage Decay Test (see 5.8)

5.1.2 Routine (Production) Tests

The following routine (production) tests shall be conducted:

a. Short-time Overvoltage Test (see 5.9)

b. Capacitance Test (see 5.10)

c. Loss Determination Test (see 5.11)

d. Discharge Resistor Test (see 5.12)

e. Leak Test (see 5.13)

5.2 TEST CONDITIONS

Tests shall be conducted under the following conditions unless otherwise specified:

a. New and clean capacitors shall be used for each test

b. Ambient temperature shall be 25° C $\pm$ 5° C

c. All alternating-current voltages shall have a frequency of 50 or 60 Hz and an approximately sinusoidal wave shape

5.3 DESIGN (TYPE) TESTS

The design tests described in paragraphs 5.5 through 5.8 shall be performed by the manufacturer on a sufficient number of capacitors and ratings to demonstrate compliance with these standards. These tests need not be repeated unless the design of the capacitor is changed so as to modify its performance. Capacitors shall first meet routine test requirements before being subjected to design tests.

5.4 ROUTINE (PRODUCTION) TESTS

Routine tests are tests made by the manufacturer on each capacitor to ensure that the design performance is maintained in production.

5.5 IMPULSE WITHSTAND TEST-CASE INSULATION (DESIGN TESTS)

The test capacitors shall be capable of withstanding an impulse voltage test at the voltages shown in Table 5-1.

Copyright National Electrical Manufacturers Association
Provided by IHS under license with NEMA
No reproduction or networking permitted without license from IHS
Not for Resale

Table 5-1
IMPULSE TEST VOLTAGES

Range of Capacitor Voltage Ratings (Terminal-to-Terminal) Volts rms	Impulse Test, kV Crest
216–1,199	30*
1,200–5,000	75*
5,001–15,000	95
13,200–20,000	125

* Outdoor capacitors only

Single bushing capacitors where the case forms one electrode shall not be subjected to the impulse withstand test. When one principal terminal of the capacitor is connected to the case, the BIL requirements shall not apply to the internal insulation assembly. The internal insulation assembly shall assure that the capacitor will meet the requirements of 5.9. However, the bushing shall meet the requirements of 4.7, and the nameplate shall carry the applicable BIL.

The test shall consist of three successive 1.2 $\times$ 50 microsecond positive full-wave impulses applied between the terminals, connected together, and the case or housing. The tolerance on test waves shall be as noted in Table 5-2.

Table 5-2
TEST WAVE TOLERANCES

Quantity Measured	Tolerances on 1.2 $\times$ 50 Microsecond Impulse Wave Percent
Crest Value	$\pm$ 3
Front Time	$\pm$ 30
Time to Half Value	+ 0, -20

5.6 THERMAL STABILITY TEST (DESIGN TEST)

The test capacitor shall be considered thermally stable if the hot spot case temperature reaches and maintains a constant value within a variation of 3° C for 24 hours under the test conditions described in 5.6.1 and 5.6.2.

5.6.1 Selection of Samples

One sample shall be selected as the test capacitor. Two other capacitors of the same ratings and having approximately the same power factor and capacitance (at rated voltage, rated frequency, and case and internal temperatures at t_s) as the test capacitor shall be selected for barrier capacitors.

Resistor models having the same power loss, thermal characteristics, and physical dimensions as the test capacitor may be substituted for the barrier capacitors.

5.6.2 Test Method

5.6.2.1 Mounting Conditions

The test capacitor, selected as above, shall be mounted in an enclosure between the two barrier capacitors at the manufacturer's minimum recommended center-to-center spacing. The mounting positions selected shall be the recommended operating position which produces the highest internal temperature.

Copyright National Electrical Manufacturers Association
Provided by IHS under license with NEMA
No reproduction or networking permitted without license from IHS
Not for Resale

5.6.2.2 Ambient Temperature

The air inside the test enclosure shall be maintained at an average temperature of 46° C and shall not be force-circulated. The inside wall temperature of the enclosure shall be within ±5° C of the ambient temperature in the enclosure.

The ambient temperature shall be measured by means of a thermocouple on the case or within the dielectric of an isolated unenergized capacitor, supported and positioned so that it is subjected to minimum possible thermal radiation from the three energized samples.

5.6.2.3 Test Voltage

All three sample capacitors shall be energized at a test voltage to be determined as follows:

$$V_T = 1.1 V_R \times \sqrt{\frac{W_M}{W_A}}$$

Where:

V_T = Test voltage

V_R = Capacitor rated voltage rms

W_M = Manufacturer's maximum allowable power loss. This loss shall be calculated using 110 percent of rated voltage rms and the manufacturer's established maximum product of measured capacitance and power factor, at rated voltage and frequency and at a stated case and internal temperature t_s

NOTE–W_M does not correspond to an exact limit on either capacitance or power factor but does correspond to an exact limit on their products.

W_A = Actual power loss of the test capacitor. This loss shall be calculated using 110 percent of rated voltage rms and the actual capacitance and power factor of the test capacitor measured at rated voltage and frequency and at a stated case and internal temperature t_s

t_s = Manufacturer's dielectric temperature limit under the conditions of this thermal stability test

The test voltage (V_T) calculated for this test shall be limited to a value which will result in operation of the test capacitor at a maximum of 144 percent of its kilovar rating. This voltage shall be maintained constant, within ±2 percent throughout the last 24 hours of the test period.

5.6.2.4 Temperature Measurement

The temperature of the test capacitor shall be measured by means of thermocouples attached to the case sidewall and cover to measure the maximum case temperature. All temperature measurements shall be accurate within ±1°C.

5.7 RADIO INFLUENCE VOLTAGE (DESIGN TEST)

Radio influence voltage measurements on capacitors shall be conducted in accordance with the requirements of 5.7.1 through 5.7.5.

5.7.1 Equipment

The equipment and general method used in determining the radio influence voltage shall be in accordance with NEMA Standards Publication 107.

5.7.2 Test Voltages

Capacitors shall be tested at 115 percent of their rated voltage rms.

--`,,`,,`-`-`,,`,,`,`,,`---

Copyright National Electrical Manufacturers Association
Provided by IHS under license with NEMA
No reproduction or networking permitted without license from IHS
Not for Resale

5.7.3 Method of Test

Capacitors having two or more bushings with the windings fully insulated from the case shall be tested with the case grounded and with the voltage applied between all bushings connected together and the case. Capacitors having only one bushing per phase with the case as the other terminal shall not be tested. This type of construction precludes any meaningful RIV measurement due to the high capacitance.

5.7.4 Precautions in Making Tests

The following precautions shall be observed when measuring the radio influence voltage of capacitors:

a. The capacitor shall be at approximately the same temperature as the room in which the tests are made

b. The bushings of the capacitor shall be dry and clean

c. The capacitor shall be mounted in its normal position with the recommended clearance

5.7.5 RIV Limits

The radio influence voltage when measured in accordance with the foregoing at a frequency of 1 megahertz, shall not exceed 250 microvolts for all capacitors rated 25000 volts and less.

5.8 VOLTAGE DECAY TEST (DESIGN TEST)

Capacitors shall be energized at rated alternating-current voltage rms or at a direct-current voltage equal to $\sqrt{2}$ times rated voltage rms. The capacitor shall then be de-energized, and the decay of the voltage shall be measured by suitable means. The time for the residual voltage to decay to 50 volts or less shall not exceed 5 minutes for capacitors rated above 600 volts or 1 minute for capacitors rated 600 volts or less.

5.9 SHORT-TIME OVERVOLTAGE TESTS (ROUTINE TESTS)

a. Each capacitor shall withstand a sinusoidal test voltage at 50 or 60 Hz or a direct-current voltage for 10 seconds in accordance with the following paragraphs

b. The voltage shall be applied in such a manner as to avoid transients. The capacitor's case and internal temperature shall be $25^{o}\,C \pm 5^{o}\,C$

5.9.1 Terminal-to-Terminal Tests

Terminal-to-terminal test shall be made on individual capacitors as follows:

Each capacitor shall withstand an alternating sinusoidal voltage of two times rated voltage rms or a direct current voltage of 4.3 times rated voltage rms.

For those systems with higher than normal overvoltages, a special design for capacitors rated 2400 V rms or higher may be used for which this test will be increased to a DC test voltage of $6.25 \times$ rated voltage rms in accordance with agreement between manufacturer and purchaser.

For three-phase wye connected capacitors, the above testing for terminal-to-neutral shall be followed by a test at $\sqrt{3}$ times the above values between each outside bushing to the center bushing to test the phase insulation.

The capacitance shall be measured on each capacitor both before and after the application of the test voltage. The initial capacitance measurement shall be at low voltage. The change in capacitance, as a result of the test voltage shall be less than the value caused by failure of a single roll of the particular design.

Copyright National Electrical Manufacturers Association
Provided by IHS under license with NEMA
No reproduction or networking permitted without license from IHS
Not for Resale

5.9.2 Terminal-to-Case Tests

Terminal-to-case test shall be made on individual capacitors having all terminals insulated from the case, using the ac test voltages in Table 5-3.

Table 5-3
TERMINAL-TO-CASE TEST VOLTAGES

Range of Capacitor Voltage Ratings (Terminal-to-Terminal)		Alternating-Current Test Voltage (Terminal-to-case)	
Volts RMS	**BIL**	**Indoor***	**Outdoor**
0–300	30**	3,000	10,000
301–1,199	30**	5,000	10,000
1,200–5,000	75**	11,000	26,000
5,001–15,000	95	—	34,000
13,200–20,000	125	—	40,000

* Housed equipment also included
** Outdoor capacitors only

In making the foregoing terminal-to-case dielectric tests, all terminals shall be connected together and the test voltage applied from terminal to case.

For capacitors having one terminal common to the case, the foregoing terminal-to-case test voltages shall not apply, and the only test shall be the terminal-to-terminal test.

5.10 CAPACITANCE TEST (ROUTINE TEST)

Capacitance tests shall be made at the factory to demonstrate that each individual capacitor will deliver not less than the rated kVAR and not more than 110 percent of rated kVAR at rated voltage and frequency, corrected to a capacitor case and internal temperature of 25°C. Capacitance measurements shall be traceable to the National Institute of Standards and Technology.

5.11 LOSS TEST (ROUTINE TEST)

Loss measurement shall be made by the manufacturer on each capacitor to demonstrate that the capacitor losses are equal to or less than W_M as defined in 5.6.

5.12 DISCHARGE RESISTOR TEST (ROUTINE TEST)

Each capacitor containing an internal discharge resistor shall be tested after the terminal-to-terminal potential test to ensure that the resistors are within design limits sufficient to meet the requirements (5.8). The value shall be permitted to be determined at a low voltage using a suitable resistance bridge.

5.13 LEAK TEST (ROUTINE TEST)

A suitable leak test shall be made to demonstrate that each capacitor is free from leaks.

--`,,`-`-`,,`,,`,`,,`---
Copyright National Electrical Manufacturers Association
Provided by IHS under license with NEMA
No reproduction or networking permitted without license from IHS
Not for Resale

--```-`-`,,`,,`,`,,`---

Copyright National Electrical Manufacturers Association
Provided by IHS under license with NEMA
No reproduction or networking permitted without license from IHS

Not for Resale

Section 6
GUIDE FOR THE APPLICATION AND OPERATION OF SHUNT CAPACITORS

6.1 GENERAL

The manufacturer's instructions should be carefully studied and followed in order to secure the best results. It is impossible here to cover in detail the complete rules for the installation of each of the different types of capacitors manufactured, but the following information is given relative to the most important points to be considered.

6.2 RELIABILITY

Capacitors should typically exhibit a low and generally constant failure rate over their useful life. The first year failure rate will normally be higher than following years. The life of a capacitor is shortened by overstressing, overheating, physical damage, and excessive cyclic changes. Replacement of capacitors older than 20 years should be considered.

6.3 OVERVOLTAGE LIMITS AND PROTECTION

Capacitors cause a voltage rise at the point where they are located; thus, the operating voltage is increased. Capacitors are, therefore, more likely to operate at overvoltages than other types of equipment which cause a voltage drop at the point where they are located. Recognizing this factor, the nameplate voltage rating of capacitors and permissible over-voltage operation are higher than those established for most other circuit devices, such as motors. For example, a motor rated 440 volts is recommended for operation on the same circuit as a capacitor rated 480 volts. Standards have been established to allow capacitors to operate at 110 percent of rated voltage rms, provided that the crest voltage including all harmonics does not exceed 1.2 $\sqrt{2}$ times rated voltage rms and provided that the maximum permissible 1.35 times rated kVAR is not exceeded. If the 110 percent voltage is exceeded, then the circuit voltage should be reduced, the capacitors switched off during the high-voltage periods, or capacitors with higher voltage ratings used. Daily operation at the upper voltage limit and temperature limits will shorten the life of capacitors, and such operation should be permitted only in cases of emergency.

Capacitors are frequently used connected directly in parallel with induction motors and switched by means of a motor switching device. Overvoltage may result when the motor capacitor combination is disconnected from the line, since the inertia of the motor and its mechanical load will keep the motor rotating and the motor will operate as an induction generator. The voltage of self-excitation for a given motor and capacitor combination will depend upon the intersection of the capacitor volt-ampere line and the motor magnetization curve. To ensure against such overvoltages, the electrical size of capacitors should be limited to the no-load reactive component of the motor.

When a capacitor larger than permitted above is used, a separate switch, controlled by the motor switch, to automatically disconnect the capacitor when the motor is disconnected is recommended.

When a motor can be rapidly de-energized and re-energized, the possibility of high transient torques should be considered. Capacitors switched with motors prolong the duration of residual voltage in the motor as it comes to rest after de-energization. In cases where motors and capacitors are to be rapidly de-energized and re-energized, the motor manufacturer should be consulted.

Capacitors may be operated above 110 percent of rated voltage under emergency and infrequent conditions. The magnitude of the overvoltages, which may be tolerated without loss of life, is dependent upon the duration of each overvoltage, the number of applications, and the temperature of the capacitor. The values shown in Table 6-1 are based on full life expectancy when the over-voltages are limited to a combined total of 300 applications during the life of the capacitor. In addition, the limitations shown in

Copyright National Electrical Manufacturers Association
Provided by IHS under license with NEMA
No reproduction or networking permitted without license from IHS
Not for Resale

Table 6-1 are based on the occurrence of overvoltages when internal temperatures of the capacitors are less than 0°C. The multiplying factors shown in these tables may be increased, upon recommendation by the manufacturer, when fewer overvoltages are expected or when less severe temperature conditions exist.

Table 6-1
MAXIMUM MOMENTARY
OVERVOLTAGE LIMITS

Duration	Multiplying Factor Times Rated Rms Voltages
6 cycles	2.2
15 cycles	2.0
1 second	1.7
15 seconds	1.4
1 minute	1.3
30 minutes	1.25

The overvoltage limits apply for power frequencies where high frequency transients are not superimposed. The crest voltage should not exceed $\sqrt{2}$ times the foregoing rms values. Power frequency overcurrent associated with allowable power frequency overvoltages are always within the capability of the capacitor. High voltage and current transients are uncommon in most power circuits, but capacitors may be subjected to both high voltage and high current under certain conditions associated with switching. The magnitude of the permissible current and voltage peaks depends on the frequency of occurrence. Capacitors are expected to survive infrequent high transient lightning currents (20 kA peak) and discharge currents to nearby faults from a maximum of 2.5 per unit (voltage) without significant damage. Capacitor fuses may operate during these events.

In the case of a frequently switched capacitor, current and voltage peaks should be held to lower values; for example, transient currents should be limited to 12 kA peak for a 400 or larger kVAR or 4 kA for a 50 kVAR. A capacitor reasonably may be expected to withstand transient overvoltages listed in Table 6-2.

Capacitors connected to exposed lines may require surge protection by station-type of line-type surge arrestors as close as possible to the capacitor. If capacitors are located indoors, the arrestors may be located at the line entrance to the building Capacitors connected between the line and grounded neutral may be effective in reducing the slope of a traveling wave front but, since the available energy may sometimes be sufficient to charge the capacitors to a dangerously high voltage, an arrestor arranged in parallel with the capacitors is recommended for protection.

Table 6-2
TRANSIENT OVERVOLTAGE
WITHSTAND CAPABILITY

Possible Number of Transients Per Year	Multiplying Factor to Be Applied to Rated Voltage rms
4	5.0
40	4.0
400	3.4
4,000	2.9

Copyright National Electrical Manufacturers Association
Provided by IHS under license with NEMA
No reproduction or networking permitted without license from IHS
Not for Resale

Capacitor banks installed on three-phase, four-wire multi-grounded neutral distribution feeder circuits frequently are connected in wye with the neutral of the capacitor bank connected to the system multi-grounded neutral conductor. Under certain conditions, the neutral of the capacitor bank may be disconnected from the system neutral conductor to reduce the harmonic currents in the system. With the neutral of the capacitor bank floating to reduce harmonic currents, or if the bank is normally installed in the ungrounded wye configuration, a fault in one phase of the bank may subject the capacitors in the unfaulted phases to overvoltage. A completely faulted phase of a capacitor bank may subject the capacitors in the unfaulted phases to $\sqrt{3}$ times system line-neutral voltage. With fusing practices, the time that the capacitors are subjected to the overvoltage may exceed the stated overvoltage capability of the capacitor as defined in Table 6-1. The user should recognize that sustained high over-voltage may be impressed on capacitors in ungrounded wye capacitor banks if capacitor switches and unbalanced detection scheme are not used.

Fuses are not recommended for use in series with discharge devices, including potential transformers or reactors. If fuses are used, their current-carrying capacity should be sufficient to carry the capacitor discharge current without damage and should be of the indicating type.

6.4 OPERATING AND AMBIENT TEMPERATURES

It is essential that consideration be given to the arrangement of capacitors and complete equipment as an installation to provide adequate ventilation and dissipation of losses. Capacitors may be designed to operate at a lower temperature rise than most other types of apparatus for the following specific reasons.

6.4.1 Capacitors may operate at full load continuously, which eliminates the benefit of an average temperature rise derived from the usual load cycle under which most other apparatus operates.

6.4.2 Capacitors may be designed to operate at comparatively high dielectric stresses for reasons of economy. The combination of these stresses with operation at high temperature for extensive periods of time may result in gradual deterioration and shortened life.

Capacitor ratings are based on maximum ambients with an allowance for heat dissipation by radiation and convection. The arrangement and mounting of units and the conditions of installation may affect the heat dissipation and thereby limit the ambient temperature at which the capacitor may be operated. The following points are important in relating the operating temperature of a capacitor to the conditions of installation.

6.4.3 An individual nonenclosed capacitor such as is mounted on a pole outdoors may dissipate losses with the least temperature rise (the heat dissipation being approximately 45 percent by radiation and 55 percent by convection).

6.4.4 The mounting of capacitors in rows side by side or in tiers, or both, may increase the temperature rise in each tier above the tier below because of heating of the air stream and because of reduced radiation.

6.4.5 The enclosing of capacitors is a housing or room may increase the temperature rise because of reduced radiation and restriction of the natural circulation of air.

6.4.6 Capacitors subjected to radiation from the sun or from any surface, the temperature of which is above the ambient, may show a higher temperature rise.

6.4.7 Capacitors and equipments operating outdoors without restriction on movement of air may normally operate with lower temperature rises than those operating indoors in still air conditions. This reduction in temperature rise will usually more than offset any additional temperature rise due to direct radiation from the sun.

Copyright National Electrical Manufacturers Association
Provided by IHS under license with NEMA
No reproduction or networking permitted without license from IHS
Not for Resale

Indoor installations may require special consideration due to possible continuous high ambient temperatures and restricted air movement.

Individual capacitors rated 600 volts and below, installed indoors without enclosures or restricted ventilation (live terminal parts and fuse connections may be enclosed with an allowance for the free circulation of air about the sides other than the top), may be suitable for continuous operation at ambient temperatures up to and including 46°C. Where ambient air temperatures higher than listed in 2.3 are expected in service, the manufacturer's recommendations should be sought.

There is a risk of damage to capacitors if they are energized when their temperature is below the minimum of -40° C cited in 2.3.2. The manufacturer's recommendation should be sought when energization at temperatures below this minimum is considered.

6.5 ABNORMAL OVERLOAD CURRENT

6.5.1 Overload capacitor currents caused by excessive fundamental voltages or harmonic voltages may occasionally be encountered. Total rms currents due to fundamental and harmonic voltage should be limited to a maximum of 1.8 times the normal 50 to 60 hertz rating of capacitors rated 2,400 volts or higher. The blowing of fuses or excessive temperature rise, or both, may be the first noticeable indication of an overload condition.

Higher frequency currents will have significantly more heating than power frequency current of the same rms magnitude and may cause fuse operations and connection overheating and failure. Applications with significant harmonic loading represent unusual service conditions not covered by this standard and should be referred to the manufacturer.

Capacitors and auxiliary devices are designed for continuous operation up to 1.35 times rated kilovar including the kilovar due to the fundamental voltage and all harmonic voltages provided that the capacitor voltage does not exceed an rms value of 1.1 times rated or a peak value of $1.2 \times \sqrt{2}$ times rated voltage rms. Where currents with substantial harmonic components are likely to be encountered, provision should be made for additional current-carrying capacity in the circuit breakers, fuses, and other auxiliary devices.

If harmonic currents are above the allowable limits, one or more of the following remedies should be undertaken.

6.5.2 Relocation of the capacitors to other parts of the circuit may reduce overcurrent due to partial resonance.

6.5.3 Capacitors may be switched off the circuit during periods in which overcurrents are likely to occur. Automatic control actuated by change in current, change in voltage, change in reactive kVAR, or by time clock may be used.

6.5.4 The neutral ground, if present, may be removed. It should be noted that bank insulation and switch load interrupting rating may be inadequate if neutral is disconnected.

6.5.5 If these remedies fail, it may be necessary to resort to the use of a harmonic filter.

6.6 INSPECTION AND MAINTENANCE

WARNING: Switch power off before doing any work on capacitors or equipment. Make a visual check for an open contact to be certain that the capacitors are disconnected from the power source. Wait 5 minutes after de-energization for self-discharge and then short-circuit and ground the capacitor before handling.

Capacitors for shunt or series application on power systems normally have internal discharge resistors (so indicated on the nameplate) which are designed to reduce the voltage after the power is switched off in five minutes for those rated over 600 volts, and in one minute for those rated 600 volts or less. After the

Copyright National Electrical Manufacturers Association
Provided by IHS under license with NEMA
No reproduction or networking permitted without license from IHS
Not for Resale

indicated time, the capacitor or equipment should be shorted and grounded by using a shorting stick with an insulated handle. In the case of a failed capacitor where there is a concern that the discharge resistor may be damaged, before handling, the capacitor terminals should be connected together and to the case with a shorting wire.

Inspection should be made within 8 to 24 hours after the installation of capacitors and during the first periods of light load on the circuit when maximum overvoltage will be obtained. Readings of voltage and current in each phase should be made to determine the following:

6.6.1 Phase voltages are balanced within the limits of the capacitor rating.

6.6.2 Operating kilovar (that is, the sum of the fundamental frequency kilovar and any harmonic frequency kilovar which may be present) does not exceed 135 percent of the rated value.

Regular inspection of the capacitor installation on an established schedule should include a check of ventilation, fuses, temperature, and voltage conditions. Capacitor bushings and insulating surfaces should be cleaned periodically, depending on the severity of conditions to which the insulators are exposed. Capacitors or equipment exposed to weathering should be repainted periodically to prevent excessive corrosion.

The capacitor and the liquid it contains should be disposed of in a manner consistent to the applicable local, state, and federal regulations.

6.7 FIELD TEST ON CAPACITORS

A field test on capacitors may include capacitance or current test, discharge resistor test, insulation resistance test, and seal test for liquid tightness.

WARNING: Capacitors may rupture during the high voltage tests in 6.7.1. Adequate safeguards should be provided to prevent injury to personnel or damage to adjacent equipment in event of violent failure of a capacitor during test. Testing should be done at or near room temperature to avoid damage to the dielectric. The capacitor may be damaged if discharged by short-circuiting its terminals before five minutes after the test potential is removed. Before any tests are initiated, the manufacturer's instructions should be carefully studied and followed.

6.7.1 Tests on Capacitors After Placement in Service

Field tests may be made to ascertain the operating condition of a capacitor. Such tests are recommended only in case of indication of trouble or after exposure to possible damage. The serviceability of a capacitor may be determined by one or more of the following simple tests.

6.7.1.1 Capacitance may be determined by utilizing a low voltage capacitance meter. Capacitance may also be determined by measuring the current while applying a known voltage and frequency (preferably rated voltage and frequency) of a reasonably good wave shape. These tests will also generally indicate a short-circuited capacitor or open-circuited capacitor. See 3.1 and nameplate rating for the determination of nominal capacitance values.

6.7.1.2 Line-to-line internal discharge resistor may be checked with a suitable bridge or calculated from the direct-current voltage and current readings.

6.7.1.3 Line-to-case insulation resistance measurements may be made to determine the condition of the line insulating terminals and dielectric insulation to case. The resistance measured should be not less than 1000 megohms. This test is not applicable to single bushing capacitors. Measuring the line-to-case power factor or dielectric loss is another means of determining the condition of the line insulating terminals and insulation to case, but it has no advantage over the resistance test described.

--`,,`-`-`,,`,,`,`,,`---

Copyright National Electrical Manufacturers Association
Provided by IHS under license with NEMA
No reproduction or networking permitted without license from IHS
Not for Resale

6.7.1.4 Liquid tightness of a capacitor may be checked by increasing the internal pressure and inspecting for leaks. This may be done effectively by thoroughly cleaning the case, heating the capacitor a minimum of four hours in an oven, and then placing it horizontally on clean paper with the suspected point of leakage on the bottom. The temperatures of the capacitor case should not be allowed to exceed the manufacturer's recommendations; 50° C may be used if the manufacturer's limit is not available.

The measurable characteristics of properly applied and installed capacitors, which are hermetically sealed, are not expected to change with time. Therefore, periodic testing may not be necessary. However, operating conditions may change, resulting in damage and short life; hence, periodic inspection and check of such operating conditions as outlined previously in this section are highly desirable.

6.7.2 Handling of Failed Capacitors

Some failed capacitors may be found considerably bulged due to internal pressure from gassing prior to circuit clearing. Such capacitors should be handled very carefully. A failed capacitor should be short-circuited before handling (see 6.6.). It is further recommended that a bulged capacitor be permitted to cool before handling. This will lower the internal pressure, reducing the possibility of case rupture.

Consult the material safety data sheet for further information on handling failed capacitors.

6.8 FUSING GUIDELINES

6.8.1 General

Since capacitors contain large areas of insulation that are operated at relatively high voltage stress, some insulation failures may occur. The system fault current available at the capacitor location, type of connections (such as delta or wye, neutral grounded, or ungrounded) kVAR rating of the individual capacitors and the bank, and the number of capacitors in parallel, are factors that should be considered when determining the proper protection for a capacitor bank. A properly applied protection scheme should minimize the probability of capacitor case rupture.

6.8.2 Fuse Current Rating

The allowable continuous current of the fuse should exceed the rated current of the capacitor by a factor. This factor is based on the type of bank, its connections, and variations that can occur, such as capacitor tolerances, over-voltage operation and harmonics. Care should be exercised in the selection of the factor since a fuse that is too large increases the probability of a case-rupture occurrence, and a fuse that is too small will cause unwanted fuse operation. The selection of a proper fuse minimizes the possibility of the occurrence of either of these events.

In general, the smallest fuse that has an allowable continuous current capacity that will carry the maximum current expected at the capacitor bank location and will withstand the transient currents that can occur, will be the best selection.

The allowable continuous current referred to above is not necessarily the same as the rated continuous current or the current rating of the fuse. Many types of fuses have continuous-current-carrying capabilities that exceed their assigned ratings.

Fuse derating factors may be necessary to address preload and environmental conditions. Current-limiting fuses often have derating factors that need to be applied to their continuous current carrying capability due to preload and environmental conditions. Expulsion fuses may also need similar derating.

The manufacturer of the fuse, capacitor, or bank should be consulted if any of the information necessary for application is unknown for any particular device.

6.8.3 Fuse Voltage Rating

The rated maximum voltage of fuses used for individually fused capacitors should be equal to, or greater than, 110 percent of the nameplate rated voltage of the capacitors.

Copyright National Electrical Manufacturers Association
Provided by IHS under license with NEMA
No reproduction or networking permitted without license from IHS
Not for Resale

For group fusing of capacitors, the rated maximum voltage of the fuse should be equal to, or greater than, the system's maximum voltage. If the bank's neutral is solidly grounded and no physical conditions exist that can impose line-to-line voltage across the fuse during a fault, then a fuse having a rated maximum voltage equal to or exceeding the system's maximum line-to-neutral voltage may be used.

If the fuse is a current-limiting type, the lowest rated maximum voltage fuse that meets these requirements should be used. Use of a current-limiting fuse having too high a rated maximum voltage could produce undesirably high peak arc voltages, which, in turn, impose high voltage transients on the power system.

6.8.4 Fuse Interrupting Rating

All fuses should have an interrupting rating that exceeds the available fault current to which the fuse may be subjected. The fault currents may be limited by current-limiting reactors, multiple series capacitors, a floating neutral, or other means.

6.8.5 Stored-Energy Transients

Stored-energy transients are a concern for fuses used with individual capacitor units.

Proper selection of the fuse should take into account the energy stored in the parallel-connected group of capacitors. If a capacitor-unit failure occurs, the energy stored in each parallel-connected capacitor will discharge through its own fuse. Fuse selection should be made so that it can withstand the I^2T of this high-frequency discharge without damage.

The discharge from all of the parallel-connected capacitors will flow through the failed capacitor and its fuse. The fuse shall have a discharge-energy (Joules) interrupting rating that exceeds the maximum energy stored in the parallel-connected group of capacitors, considering all voltage conditions that can exist.

When fuses are used to individually fuse the capacitors in a bank, in order to minimize the probability of failure of the fuse or rupture of the capacitor case, the total energy stored in the parallel-connected group of capacitors, the discharge-energy (joules) withstand rating of the capacitor and the discharge-energy (joules) interrupting rating of the fuse require consideration. The discharge-energy withstand of the capacitor is related to its construction and dielectric materials used.

When the capacitor dielectric is all-paper or paper-film, the parallel-energy should not exceed 10,000 joules when computed on the basis of the peak capacitor voltage being $1.1 \times \sqrt{2}$ times rated voltage rms, or at 60-Hz, 3100 kVAR at rated voltage for maximum parallel-connected kVAR with expulsion fuses.

Expulsion-type unit fuses are available that have a discharge-energy interrupting rating equal to or greater than 10,000 joules. Current-limiting fuses with discharge-energy interrupting ratings greater than 10,000 joules are also available if desired.

When the capacitor dielectric is all-film and its discharge-energy withstand rating is 15,000 joules, the energy available from parallel-connected capacitors should not exceed 15,000 joules. For 60 Hz applications, 4650 kVAR at rated voltage is recommended as the limit for using expulsion fuses on all-film capacitors. Expulsion type unit fuses are available that have a discharge-energy interrupting rating of 15,000 joules. Current-limiting fuses with discharge-energy interrupting ratings greater than 15,000 joules are also available if desired.

When the capacitor dielectric is all-film and its discharge-energy withstand rating is greater than 15,000 joules the energy available from parallel-connected capacitors may be increased to this greater withstand value. The discharge-energy interrupting rating of the expulsion or current-limiting fuse should be equal to, or greater than, the energy available from parallel-connected capacitors.

When high energy levels from parallel-connected capacitors are possible, use of current-limiting fuses is only one option. Different bank construction or connection schemes are other options.

Copyright National Electrical Manufacturers Association
Provided by IHS under license with NEMA
No reproduction or networking permitted without license from IHS
Not for Resale

If the bank can be exposed to voltages higher than the normally-allowed capacitor overvoltages, the number of parallel-connected units should be reduced so that the discharge-energy withstand rating of the capacitor and the discharge-energy interrupting rating of the fuse are not exceeded.

Installation procedures for fuses and selection and maintenance of switches and other protective or switching equipment is extremely important since re-strikes caused by these devices can significantly increase the energy stored in the parallel units.

6.8.6 Capacitor Protection Schemes

The two most commonly used protective schemes are primary group fusing and individual capacitor fusing.

6.8.6.1 Group Fusing

Group fusing is more often used on small distribution banks. Rating of group fuses should be selected which will:

a. Withstand the inrush current during energization

b. Carry the continuous bank current with adequate allowance for normal overloads caused by voltage regulation, harmonics, plus tolerances in capacitance

c. Isolate, where possible, a capacitor-unit internal fault before the internal gas pressure causes rupture of the failed unit and, in the case of ungrounded wye-banks, before the remaining capacitors in the unfaulted phases are damaged by overvoltages

d. Withstand the outrush current when conditioned from preloading during energization of any nearby capacitor bank

Where group fusing only is used, it is important that the fuse have a time-current clearing characteristic which is consistent with the degree of risk associated with case rupture, and that will be acceptable for the type of installation and location contemplated.

6.8.6.2 Individual Fuses

Individual capacitor fuses are commonly used on relatively large capacitor banks. In general, the operation of the fuse in banks involving more than one series group per phase, and in all ungrounded wye-banks irrespective of the number of series groups per phase, will increase the voltage on the capacitors remaining in service in that series group.

In addition to fuses, the capacitor bank's protective scheme should include provisions for disconnecting the entire bank for faults not isolated by the fuses or before the voltage on the remaining capacitors exceeds the values recommended in 6.3.

To prevent involvement of adjacent parallel capacitors and/or fuses in the fault when individual fuses are used, the following conditions should be considered:

a. The fuses and capacitors need to be properly spaced

b. Any exhaust gases from the fuses should be properly directed or controlled

c. The installation procedures used for the fuse leader and its disconnecting mechanism should be such that their motion and position are controlled. This is to minimize risk of flashover to adjacent fuses or capacitor live parts and the unnecessary blowing of the adjacent capacitors' fuse(s)

6.8.7 Maximum Inductive Fault Currents

Excessive inductive faults flowing through a failed capacitor can cause case rupture; each capacitor design has its own withstand capabilities. This capability is normally provided in the form of a tank rupture

--`,,`-`-`,,`,,`,`,,`---
Copyright National Electrical Manufacturers Association
Provided by IHS under license with NEMA
No reproduction or networking permitted without license from IHS
Not for Resale

curve, [Time (seconds) vs. Current (amperes)]. The clearing time of the protecting fuse at any current value that can occur on the system should be below and to the left of the capacitor tank rupture curve. If this cannot be accomplished with expulsion fuses alone, current-limiting fuses should be used.

Typical curves indicating regions of probable case rupture for capacitors with paper, paper-film or all-film dielectrics are shown in Figure 6-1.

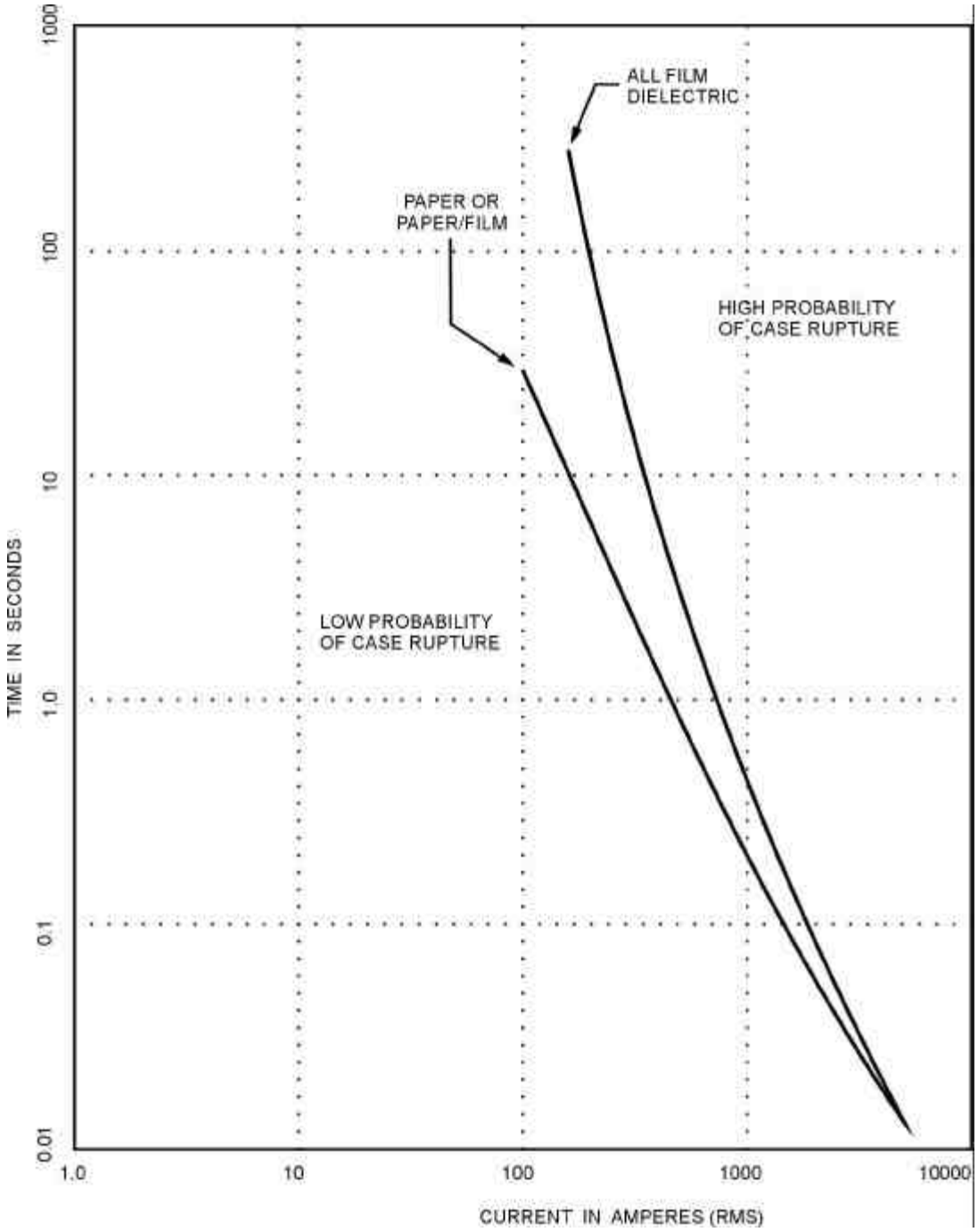

Figure 6-1
TYPICAL CASE RUPTURE CURVES FOR APPROXIMATELY 1800 IN^3 CASE VOLUME

Copyright National Electrical Manufacturers Association
Provided by IHS under license with NEMA
No reproduction or networking permitted without license from IHS
Not for Resale

6.8.8 Application Information

If the user has insufficient information to be able to determine the necessary protection, the needed information should be obtained from the manufacturer of the fuse, capacitor, or bank.

At the request of the user, the capacitor manufacturer should provide the user with case-rupture curves for their capacitors.

At the request of the user, the fuse manufacturer should provide the fuse data necessary for application of fuses to capacitors.

If the fuse has operated, the capacitor associated with that fuse operation should be checked for proper capacitance before re-fusing and re-energizing.

--`,,`-`-`,,`,,`,`,,`---

Copyright National Electrical Manufacturers Association
Provided by IHS under license with NEMA
No reproduction or networking permitted without license from IHS
Not for Resale