STD.NEMA C93.5-ENGL 1997 6470247 0514361 541

AMERICAN NATIONAL STANDARD

American National Standard

ANSI C93.5-1997

AMERICAN NATIONAL STANDARD

REQUIREMENTS FOR SINGLE FUNCTION POWER-LINE CARRIER TRANSMITTER/RECEIVER EQUIPMENT

NATIONAL ELECTRICAL MANUFACTURERS ASSOCIATION
1300 NORTH 17TH STREET, SUITE 1847, ROSSLYN, VA 22209
(703) 841-3200 FAX: (703) 841-3300

Copyright National Electrical Manufacturers Association
Provided by IHS under license with NEMA
No reproduction or networking permitted without license from IHS
Not for Resale

STD.NEMA C93.5-ENGL 1997 ■ 6470247 0514362 488 ■

ANSI C93.5-1997

AMERICAN NATIONAL STANDARD

REQUIREMENTS FOR SINGLE FUNCTION POWER-LINE CARRIER TRANSMITTER/RECEIVER EQUIPMENT

Published by

National Electrical Manufacturers Association
1300 N. 17th Street
Rosslyn, Virginia 22209

Approved by ANSI August 20, 1997

© Copyright 1997 by the National Electrical Manufacturers Association. All rights including translation into other languages, reserved under the Universal Copyright Convention, the Berne Convention for the Protection of Literary and Artistic Works, and the International and Pan American Copyright Conventions.

Copyright National Electrical Manufacturers Association
Provided by IHS under license with NEMA
No reproduction or networking permitted without license from IHS

Not for Resale

American National Standard

Approval of an American National Standard requires verification by ANSI that the requirements for due process, consensus, and other criteria for approval have been met by the standards developer.

Consensus is established when, in the judgment of the ANSI Board of Standards Review, substantial agreement has been reached by directly and materially affected interests. Substantial agreement means much more than a simple majority, but not necessarily unanimity. Consensus requires that all views and objections be considered, and that a concerted effort be made toward their resolution.

The use of American National Standards is completely voluntary; their existence does not in any respect preclude anyone, whether he has approved the standards or not, from manufacturing, marketing, purchasing, or using products, processes, or procedures not conforming to the standards.

The American National Standards Institute does not develop standards and will in no circumstances give an interpretation of any American National Standard. Moreover, no person shall have the right or authority to issue an interpretation of an American National Standard in the name of the American National Standards Institute. Requests for interpretations shall be addressed to the secretariat or sponsor whose name appears on the title page of this standard.

CAUTION NOTICE: This American National Standard may be revised or withdrawn at any time. The procedures of the American National Standards Institute require that action be taken to reaffirm, revise, or withdraw this standard no later than five years from the date of approval. Purchasers of American National Standards may receive current information on all standards by calling or writing the American National Standards Institute.

Published by

National Electrical Manufacturers Association
1300 N. 17th Street, Rosslyn, Virginia 22209

Copyright © 1997 National Electrical Manufacturers Association

All rights reserved.

No part of this publication may be reproduced in any form, in an electronic retrieval system or otherwise, without prior written permission of the publisher.

Printed in the United States of America

Copyright National Electrical Manufacturers Association
Provided by IHS under license with NEMA
No reproduction or networking permitted without license from IHS

Not for Resale

ANSI C93.5-1997

Copyright National Electrical Manufacturers Association
Provided by IHS under license with NEMA
No reproduction or networking permitted without license from IHS

Not for Resale

CONTENTS

Page

Foreword v

Clause

1 Scope 1

2 Referenced American National Standards 1

3 Definitions 1

4 Service Conditions 4

4.1 Usual Service Conditions 4

4.2 Unusual Service Conditions 5

4.2.1 Altitude 5

4.2.2 Vibration, Shock & Seismic Conditions 5

5 Ratings 5

5.1 Dielectric Withstand Voltage Requirements 5

5.2 Surge Withstand Requirements 6

5.2.1 Carrier-Frequency Input/Output Terminals 6

5.2.2 All Other Terminals 6

5.3 Noise Emissions, EMI Susceptibility And Sound Requirements 6

5.3.1 Noise Emissions from Power Supply to Source 6

5.3.2 EMI Susceptibility 6

5.3.3 Sound Requirements 6

5.4 Transmitter 6

5.4.1 Rated Transmitter Power 6

5.4.2 Nominal Output Impedance 6

5.4.3 Load Variations 6

5.4.4 Return Loss 6

5.4.5 Frequency Setting (Synthesized Sets) 6

5.4.6 Frequency Stability 6

5.4.7 Noise Emissions 7

5.4.8 Keying Inputs 7

5.5 Receiver 7

5.5.1 Sensitivity 7

5.5.2 Maximum Signal Level 7

5.5.3 Intermodulation Rejection 7

5.6 Voice Service Channel 7

5.7 System 7

5.7.1 Dependability 7

5.7.2 Security 7

5.7.3 Operate Time 8

5.7.4 Supply Voltage Abnormalities 8

5.7.5 Maximum Frequency Variance 8

5.7.6 Minimum Frequency Spacing 8

6 Testing 8

6.1 Test Conditions 8

6.2 Design Tests 8

6.3 Design Test Procedures 9

6.3.1 Dielectric Withstand 9

6.3.2 Power Supply Noise Emissions 10

6.3.3 Supply Voltage Abnormalities 11

6.3.4 Transmitter Output Impedance 11

6.3.5 Return Loss (RL) 13

6.3.6 Load Variations 13

Copyright National Electrical Manufacturers Association
Provided by IHS under license with NEMA
No reproduction or networking permitted without license from IHS

Not for Resale

CONTENTS (continued)

Page

6.3.7 Carrier-Frequency Stability 13
6.3.8 Transmitter Noise Emissions 13
6.3.9 Transmitter Output Power 14
6.3.10 Keying Input 15
6.3.11 Carrier-Frequency Settings 15
6.3.12 Receiver Intermodulation Rejection 15
6.3.13 Maximum Receiver Level 16
6.3.14 Receiver Sensitivity 18
6.3.15 Receiver Response to Maximum Frequency Variance 18
6.3.16 Dependability (FSK ONLY) 19
6.3.17 Security (FSK ONLY) 20
6.3.18 Surge Withstand Capability 22
6.3.19 EMI Susceptibility 23
6.3.20 Sound Level 23
6.3.21 Operate Time 23
6.3.22 Minimum Frequency Spacing 24
6.3.23 Temperature/Humidity Test Procedures 25
6.4 Production Tests 26
6.5 Production Test Procedures 26
6.5.1 Dielectric Withstand 26
6.5.2 Keying Input 26
6.5.3 Transmitter Output Power 26
6.5.4 Transmitter Frequency Setting Tolerance 26
6.5.5 Transmitter Noise Emissions 27
6.5.6 Receiver Sensitivity 27
6.5.7 Alarms 27
6.5.8 Functionality 27
7 Manufacturing Requirements 27
7.1 Equipment Identification 27
7.2 Mounting 28

TABLES

Table 1 Maximum Ambient Temperature Limit Conditions 4
Table 2 Dielectric Strength Correction Factors 5
Table 3 Altitude Versus Temperature 5
Table 4 Transmitter Output Impedance Test Values 13
Table 5 Percent of Uncertainty Requirements for Security Test 22

FIGURES

Figure 1 Measurement of Dielectric Withstand 10
Figure 2 Measurement of Power Supply Noise Emissions 10
Figure 3 Measurement of Effect of Power Supply Interruptions 11
Figure 4 Measurement of Transmitter Output Impedance 12
Figure 5 Measurement of Transmitter Noise Emissions 14
Figure 6 Measurement of Transmitter Output Power 14
Figure 7 Measurement of Receiver Intermodulation Rejection 16
Figure 8 Measurement of Receiver Level and Sensitivity 17
Figure 9 Receiver Response to Maximum Frequency Variance 18
Figure 10 Measurement of Dependability 19

Copyright National Electrical Manufacturers Association
Provided by IHS under license with NEMA
No reproduction or networking permitted without license from IHS
Not for Resale

CONTENTS (continued)

Page

Figure 11 Measurement of Security 21
Figure 12A Test Circuit for Surge Withstand at Receiver 22
Figure 12B Test Circuit for Surge Withstand at Transmitter 22
Figure 13 Measurement of Operate Time 23
Figure 14 Measurement of Minimum Frequency Spacing 24
Figure 15 Temperature/Humidity Measurements 25

ANNEX
Annex A Uncertainty of Security and Dependability Measurements 29

Copyright National Electrical Manufacturers Association
Provided by IHS under license with NEMA
No reproduction or networking permitted without license from IHS
Not for Resale

Copyright National Electrical Manufacturers Association
Provided by IHS under license with NEMA
No reproduction or networking permitted without license from IHS

Not for Resale

Foreword (This Foreword is not a part of American National Standard ANSI C93.5-1997)

This document was developed by Accredited Standards Committee C93, Power-Line-Carrier Equipment and Coupling Capacitor Voltage Transformers. During the development of the standard, the Committee considered input from a balanced group representing consumer, producer, and general-interest viewpoints, which it harmonized and integrated into the standard in its present, approved form.

Accredited Standards Committee C93 was established to coordinate, revise and update the existing documents into an effective group of American National Standards, including this standard for Single Function Power-Line Carrier Transmitter/Receiver Equipment. A separate standard will be developed to cover each type of equipment described in the Committee's Scope.

This is a new standard, *Requirements for Single Function Power-Line Carrier Transmitter/Receiver Equipment*, which includes technical definitions, performance ratings, testing methods, and manufacturing requirements for transmitter/receiver equipment. It is related to American National Standard *Power-Line Carrier Coupling Capacitor and Coupling Capacitor Voltage Transformers (CCVT)*, ANSI C93.1-1990, *Requirements for Power-Line Carrier Line Traps*, ANS C93.3-1994; *Requirements for Power-Line Carrier Line Tuning Equipment*, ANSI C93.4-1984.

Suggestions for improvement of this standard are welcome. They should be sent to Secretary, ASC C93, c/o NEMA, 1300 North 17th Street, Suite 1847, Rosslyn, VA 22209.

This standard was processed and approved for submission to ANSI by Accredited Standards Committee, C93, on Power-Line Carrier Equipment and Coupling Capacitor Voltage Transformers. Committee approval of the standard does not necessarily imply that all committee members voted for its approval. At the time it approved this standard, the ASC C93 Committee had the following members:

Walter Seamon, Chairman
Christopher F. Merther, Secretary

Organization Represented	*Name of Representative*
Edison Electric Institute	Jim Benton Robert Morton G. Miller (Alt.)
Institute of Electrical & Electronic Engineers	Robert Morton Joseph Petruska
Manufacturers	Paolo Diamanti Chuck Peterson Roger Ray Jorge Ribeiro Miriam Sanders Walter Seamon
U.S. Dept. of Energy, Western Area Power Administration	Stan Friskney

This standard is dedicated to the memory of past Chairman of C93, Sig Bogdanowicz for his many contributions and dedicated service to this committee and other standards related to Power Line Carrier.

Copyright National Electrical Manufacturers Association
Provided by IHS under license with NEMA
No reproduction or networking permitted without license from IHS
Not for Resale

Copyright National Electrical Manufacturers Association
Provided by IHS under license with NEMA
No reproduction or networking permitted without license from IHS

Not for Resale

Requirements for single function power-line carrier transmitter/receiver equipment

1 Scope

This standard applies to single function power-line carrier (PLC) transmitter/receiver equipment used to transfer information over power transmission circuits. This standard does not apply to transmitter/receiver equipment used over power distribution circuits for the purpose of load management or distribution automation.

2 Referenced American National Standards

This standard is intended for use in conjunction with the following American National Standards (ANS). When these standards are superseded by a revision approved by the American National Standards Institute (ANSI) the revision shall apply:

ANS C37.90.1-1989, *ANSI/IEEE Standard Surge Withstand Capability (SWC) Tests for Protective Relays and Relay Systems*

ANS C37.90.2-1995 *ANSI/IEEE Standard For Withstand Capability of Relay Systems to Radiated Electromagnetic Interference From Transmitters*

ANS C37.98-1987, *ANSI/IEEE Standard For Seismic Testing of Relays*

ANS C93.1-1990, *Requirements for Power-Line Carrier Coupling Capacitors and Coupling Capacitor Voltage Transformers*

ANS C93.3-1994, *Requirements for Power-Line Carrier Line Traps*

ANS C93.4-1984, *Requirements for Power-Line Carrier Line Tuning Equipment*

ANSI/EIA 310-D-1992 *Racks, Panels, and Associated Equipment*

ANSI/IEEE 4-1978, *ANSI/IEEE Standard Techniques for High-Voltage Testing*

ANSI/IEEE 100-1992, *ANSI/IEEE Standard Dictionary of Electrical and Electronics Terms*

ANSI S1.4-1983, *Specifications for Sound Level Meters*

3 Definitions

All definitions, except for terms specifically covered in this standard, shall be in accordance with ANSI/IEEE 100.

Average Output Power: The power delivered by a transmitter into its normal load impedance at its fundamental radio frequency when no modulating signal is present. (For continuous sine wave output signals, transmitter average output power is given by P = E I, where E and I are rms values and the output terminals are connected to a nominal resistance load.)

A-weighted Sound Level: The value of a sound pressure signal after it has been passed through the A-weighted filter whose response is described in ANSI S1.4-1983, Specification for Sound Meters. A-weighted sound levels are expressed in decibels by the symbol dB(A).

Attenuation: A decrease in signal power in transmission from one point to another.

Copyright National Electrical Manufacturers Association
Provided by IHS under license with NEMA
No reproduction or networking permitted without license from IHS Not for Resale

Blocking Frequency: For FSK channels used in an unblocking relay system, the blocking frequency functions as the guard frequency, and usually is transmitted to prevent the operation of protection equipment.

Blocking Signal: The signal transmitted by a power-line carrier set to prevent operation of the relay system during faults outside the protected zone.

Carrier-Frequency Range: The total frequency band used for power-line carrier service.

Carrier-Frequency Band: The frequency band used for a particular one-way PLC channel.

Center Frequency: The frequency which is midway between the two shift frequencies for FSK transmitters and receivers, sometimes called the channel frequency. Also for ON-OFF carrier sets, the frequency midway between the two band edge frequencies of the channel. (These frequencies are usually integer multiples of 0.5 kHz)

Channel Time: The time between applying a signal to the input of the transmitter and generating an output from the receiver with the transmitter and receiver connected back-to-back.

Dependability: The facet of reliability that is related to the degree of certainty that a relaying channel will operate correctly.

Dielectric Withstand Capability: The ability of insulating material and physical spacing to withstand specified overvoltages for a specified time without flashover or puncture.

Electromagnetic Compatibility (EMC): The capability of electronic equipment or systems to be operated in the intended operational electromagnetic environment at designed levels of efficiency.

Electromagnetic Interference (EMI), Conducted: Electromagnetic energy that may be carried out of or into equipment by conductors that are connected to equipment terminals.

Electromagnetic Interference (EMI), Radiated: Electromagnetic interference fields which may be radiated away from or upon the outside of the most exterior equipment cover, module, cabinet, enclosure, or housing.

Frequency Variance: Frequency variance is the permissible frequency error of the PLC channel. The error consists of the total of the setting error and the stability error.

Guard Frequency: The frequency normally transmitted by a PLC FSK system. The guard signal is used to monitor the PLC channel integrity. The reception of the guard signal prevents tripping of the relay system.

Intermodulation: The modulation of the components of complex waves by each other, as a result of which waves are produced that have frequencies equal to the sums and differences and integral multiples of the components of the original complex wave.

Limiter: A device whose output amplitude is substantially linear with regard to the input up to a predetermined value and substantially constant thereafter.

Copyright National Electrical Manufacturers Association
Provided by IHS under license with NEMA
No reproduction or networking permitted without license from IHS
Not for Resale

Methods of Modulation

Amplitude Modulation (AM): A method of modulation in which the amplitude of a carrier is caused to depart from its reference value by an amount proportional to the instantaneous value of the modulating wave.

Carrier ON-OFF Keying: A method of modulation in which the transmitter output signal is keyed either "ON" or "OFF."

Frequency Shift Keying (FSK): A method of modulation in which the transmitter is shifted among fixed frequencies.

Single Sideband (SSB): A method of amplitude modulation in which one sideband is transmitted and the other is suppressed. The carrier wave may be either transmitted or suppressed.

Minimum Frequency Spacing: The minimum allowable frequency difference between adjacent channel center frequencies. This spacing can refer to the same type of equipment, or to different types of equipment.

Noise

Impulse Noise: Noise characterized by transient disturbances separated in time by quiescent intervals.

White Noise: Noise, either random or impulse type, that has a flat frequency spectrum range of interest.

Noise Emissions: Any part of the radio-frequency output that is not a component of the desired output, as determined by the type of modulation and specified bandwidth limitations.

Nominal Impedance: The impedance for which an input or an output circuit has been designed.

Operate Time: The time between applying a signal to the input of the transmitter and generating an output from the receiver with the transmitter and receiver connected back-to-back with a solid state output circuit and no intentional time delay.

Rated Transmitter Power: The average output power for which a PLC terminal has been designed.

Receiver Sensitivity: The minimum input signal level required by a receiver to produce a specified output.

Return Loss (RL): A measure of the dissimilarity between two impedances, being equal to the number of decibels that correspond to the scalar value of the reciprocal of the reflection coefficient, and hence being expressed by the formula:

$$RL = 20\log\left|\frac{Z_a + Z_b}{Z_a - Z_b}\right|$$

Where: RL is return loss in decibels
Z_a and Z_b are the two impedances

Security: The facet of reliability that relates to the degree of certainty that a relaying channel will not operate incorrectly.

Copyright National Electrical Manufacturers Association
Provided by IHS under license with NEMA
No reproduction or networking permitted without license from IHS
Not for Resale

Signal-to-Noise Ratio (SNR): The ratio of signal power to noise power within a specified bandwidth, usually expressed in decibels.

Sound Level: In decibels, the quantity measured by a sound level meter satisfying the requirements of ANSI S1.4. Sound level is the frequency weighted sound level obtained with standardized metering characteristic "fast" or "slow", and weighted A, B, or C. Unless indicated otherwise, the A-weighted is understood.

Surge Withstand Capability (SWC): The ability of a device to withstand a voltage surge of a given wave shape under specified conditions without flashover, disruptive discharge, puncture or other electrical failure.

Trip Frequency: The frequency transmitted over a protective relaying PLC FSK system which will cause, or allow operation of protection equipment. In some cases, this is referred to as the Unblocking Signal (Frequency).

Unblocking Frequency: For FSK channels used in an unblocking relay system, the unblocking frequency functions as the trip frequency and usually is transmitted to permit the operation of protection equipment.

4 Service conditions

4.1 Usual service conditions

Indoor service

- Ambient temperature range: -20° to +55° C. With regard to the temperature range, Table 1 defines the upper ambient temperature limit conditions.
- Relative humidity: Noncondensing 95% at 40° C for a period not to exceed 96 hours.
- Maximum altitude: 3300 feet (1000 meters) above sea level.
- Atmosphere free of damaging fumes, excessive or abrasive dust, explosive mixtures of dust or gases, steam, or salt spray.
- Carrier-frequency range: 30 – 500 kHz.
- DC power source:

  24 V (- 3 V, + 4 V) ungrounded
  48 V (- 6 V, + 8 V) ungrounded
  125 V (-20 V, +15 V) ungrounded
  250 V (-40 V, +30 V) ungrounded

- Ripple: 5% maximum

Table 1 – Maximum ambient temperature limit conditions °C

Continuous Maximum Over 4 Hours	Mean Over 24 Hours	Mean Over 1 Year
55	45	40

Copyright National Electrical Manufacturers Association
Provided by IHS under license with NEMA
No reproduction or networking permitted without license from IHS
Not for Resale

4.2 Unusual service conditions

4.2.1 Altitude

- Dielectric strength – For transmitter/receiver equipment applied at altitudes greater than 3300 feet (1000 meters), dielectric strength correction factors given in Table 2 shall be applied.

- Ambient temperature – For transmitter/receiver equipment applied at altitudes greater than 5000 feet (1500 meters), the maximum ambient temperatures given in Table 3 shall apply.

Table 2 – Dielectric strength correction factors

Altitude Above Sea Level	Correction Factor
3,300 feet (1000 meters)	1.00
5,000 feet (1,500 meters)	0.95
10,000 feet (3,000 Meters)	0.80

4.2.2 Vibration, shock & seismic conditions

- Vibration and shock functional requirements vary with local conditions and as such should be negotiated between the parties concerned.

- Seismic functional performance specifications are considered unusual service conditions and as such should be negotiated between the parties concerned. When these requirements are considered, seismic testing conditions and techniques are specified in ANSI/IEEE C37.98.

Table 3 – Altitude versus temperature

Altitude Above Sea Level	Maximum Ambient Temperature (degrees Celsius)	
	Continuous Maximum Over 4 Hours	Mean Over 1 Year
5,000 feet (1,500 meters)	55	40
6,600 feet (2,000 meters)	53	38
10,000 feet (3,000 meters)	48	33

5 Ratings

5.1 Dielectric withstand voltage requirements

The dc power supply, interface circuits, including keying inputs, receiver outputs, and alarms shall be capable of withstanding, without damage, a voltage of 2500 Vdc applied for one (1) minute between the terminals of the circuit connected together and chassis ground. RF terminals are excluded from this requirement.

Copyright National Electrical Manufacturers Association
Provided by IHS under license with NEMA
No reproduction or networking permitted without license from IHS
Not for Resale

5.2 Surge withstand requirements

5.2.1 Carrier-frequency input/output terminals

Carrier-frequency terminals shall be capable of withstanding a 1.2-5.0 x 40-60 microsecond surge of 3 kV without component failure or erroneous output.

5.2.2 All other terminals

The power supply, relaying interface, and breaker trip output terminals shall meet the requirements of ANSI/IEEE C37.90.1.

5.3 Noise emissions, EMI susceptibility and sound requirements

5.3.1 Noise emissions from power supply to source

Transmitter/receiver equipment noise output conducted from the power supply input terminals to the source shall not exceed 10 millivolts peak-to-peak, per test circuit in figure 2.

5.3.2 EMI susceptibility

Transmitter/receiver equipment used for protective relaying applications shall meet the requirements of ANSI/IEEE C37.90.2.

5.3.3 Sound requirements

The A-weighted sound level for PLC transmitter/receiver equipment shall not exceed 35 dB(A) at a distance of one meter from the front or back of the equipment chassis.

5.4 Transmitter

5.4.1 Rated transmitter power

A transmitter shall produce its designed rated power (±1 dB) while meeting all the usual service condition requirements of this standard.

5.4.2 Nominal output impedance

The nominal impedance at the carrier-frequency output shall be either 50 ohms or 75 ohms unbalanced.

5.4.3 Load variations

The transmitter shall be capable of operation into resistance load variations of +100% to -50% from nominal. The transmitter shall be able to recover from open and short circuits at the output terminals without permanent damage.

5.4.4 Return loss

The return loss shall not be less than 12dB over the carrier-frequency range for transmitters terminated into nominal impedance.

5.4.5 Frequency setting (synthesized sets)

The carrier frequency shall be capable of being set within ±5 Hz at all available increments at ambient test temperature.

5.4.6 Frequency stability

The carrier frequency shall not vary more than the following:

- FSK transmitters with less than ±500 Hz shift, ±10 Hz.
- ON-OFF and FSK transmitters with ±500 Hz shift or greater, ±15 Hz.

Copyright National Electrical Manufacturers Association
Provided by IHS under license with NEMA
No reproduction or networking permitted without license from IHS
Not for Resale

5.4.7 Noise emissions

The maximum permitted level of noise emissions for ON-OFF and FSK transmitters shall be 55 dB below the carrier level for transmitters up to 20 watts, inclusively, and 50 dB below the carrier level for transmitters with outputs greater than 20 watts.

5.4.8 Keying inputs

If the keying inputs use a battery source, they shall operate over the voltage range of the applicable dc power source in 4.1. They shall not operate below 50% of the highest value in that range. They shall always operate at 90% of the lowest value in that range.

5.5 Receiver

5.5.1 Sensitivity

The minimum carrier-frequency input level required to produce a receive output shall be as follows:

FSK receivers: 5 to 15 mV (at the receiver input)

ON-OFF receivers: 125 mV (at the coax input)

5.5.2 Maximum Signal Level

The receiver shall produce a correct output response with the maximum receiver input level applied. This level is dependent on receiver design, and shall be specified by the manufacturer. The maximum composite level shall also be stated.

5.5.3 Intermodulation rejection

The receiver shall remain free of internally generated inband intermodulation products affecting the operation of the receiver with the manufacturer's specified maximum composite level of two or more signals applied to the receiver input terminals.

5.6 Voice service channel

The optional voice service channel shall provide intelligible voice communication.

5.7 System

5.7.1 Dependability

The tests in the design section are recommended procedures to secure data to construct comparative curves for the equipment being described. The sample curves in Annex A are not to be interpreted as a specification. These curves do not represent the characteristics of any particular channel or requirement. Similar curves should be provided by the manufacturer for a particular equipment. There are no specific ratings for dependability.

The manufacturer shall describe the conditions of the test including logic time delay, channel time, channel bandwidth, and actual noise measurement bandwidth.

5.7.2 Security

The system used for security tests shall be the same as that used for dependability tests with the same system alignment and channel parameters (logic time delay, channel time, channel bandwidth, and noise measurement bandwidth).

The sample curves in Annex A are not to be interpreted as a specification. These curves do not represent the characteristics of any particular channel or requirement. Similar curves should be provided by the manufacturer for a particular equipment. There are no specific ratings for security.

Copyright National Electrical Manufacturers Association
Provided by IHS under license with NEMA
No reproduction or networking permitted without license from IHS
Not for Resale

5.7.3 Operate time

Operate time is a function of the channel bandwidth and is an application requirement of the protection system.

Note: Operate time does not include time delay caused by application of electromechanical relays in the receiver output circuits.

5.7.4 Supply voltage abnormalities

5.7.4.1 Slow variations

The equipment shall not sustain any damage or produce an unexpected response due to slow variations of the power supply input voltage from nominal value to zero and zero to nominal value.

5.7.4.2 Interruptions

The transmitter/receiver equipment shall continue to operate without an unwanted trip command for short interruptions of the supply voltage not longer than an accumulated 20 ms occurring in random sequence for any given 20 second period. The transmitter/receiver equipment shall not produce an unwanted trip command when the voltage is switched off or on from either supply input lead. The test circuit of figure 3 is recommended for these tests.

5.7.5 Maximum frequency variance

The carrier-frequency variance shall not exceed the following:

ON-OFF carrier and FSK with less than ± 500 Hz shift:	30 Hz
FSK with ± 500 Hz shift or greater:	40 Hz

5.7.6 Minimum frequency spacing

The manufacturer will provide frequency spacing data for 15 dB channel isolation for unidirectional channels and 25 dB for bidirectional channels.

6 Testing

6.1 Test conditions

- The reference temperature for all tests is 25° C. The ambient temperature of the room during testing may vary ±5° C.
- The test units shall be new and in clean, dry condition.
- Transmitter/receiver equipment may be tested at any altitude provided appropriate corrections from tables 2 and 3 are applied.
- In all test procedures which utilize back-to-back PLC transmitter/receiver equipment, the carrier inputs/outputs shall be connected through a non-inductive attenuator of adequate power rating and matched to the nominal impedance of the equipment.
- The sequence of testing shall be optional, except where otherwise noted.

6.2 Design tests

The following design tests shall be performed by the manufacturer on each power line carrier transmitter/receiver design to verify that its characteristics and performance meet the requirements of this standard:

Copyright National Electrical Manufacturers Association
Provided by IHS under license with NEMA
No reproduction or networking permitted without license from IHS
Not for Resale

a. Dielectric Withstand (6.3.1)
b. Power Supply Noise Emissions (6.3.2)
c. Supply Voltage Abnormalities (6.3.3)
d. Transmitter Output Impedance (6.3.4)
e. Return Loss (RL) (6.3.5)
f. Load Variations (6.3.6)
g. Carrier-Frequency Stability (6.3.7)
h. Transmitter Noise Emissions (6.3.8)
i. Transmitter Output Power (6.3.9)
j. Keying Input (6.3.10)
k. Carrier-Frequency Settings (6.3.11)
l. Receiver Intermodulation Rejection (6.3.12)
m. Maximum Receiver Level (6.3.13)
n. Receiver Sensitivity (6.3.14)
o. Receiver Response to Maximum Frequency Variance (6.3.15)
p. Dependability (FSK ONLY) (6.3.16)
q. Security (FSK ONLY) (6.3.17)
r. Surge Withstand Capability (6.3.18)
s. EMI Susceptibility (6.3.19)
t. Sound Level (6.3.20)
u. Operate Time (6.3.21)
v. Minimum Frequency Spacing (6.3.22)
w. Temperature/Humidity Test Procedures (6.3.23)

6.3 Design test procedures

6.3.1 Dielectric withstand

Apply the rated dielectric withstand voltage, given in 5.1, between each group and chassis ground and between each group and each other group.

Group	Function
1	Power supply input
2	All keying inputs
3	All receiver outputs
4	All alarm outputs

All terminals within a group are connected together.

A test circuit similar to figure 1 is recommended for these tests. The equipment shall meet all the requirements of this standard following these tests. Dielectric withstand testing shall be completed before subjecting equipment to other performance tests.

Copyright National Electrical Manufacturers Association
Provided by IHS under license with NEMA
No reproduction or networking permitted without license from IHS
Not for Resale

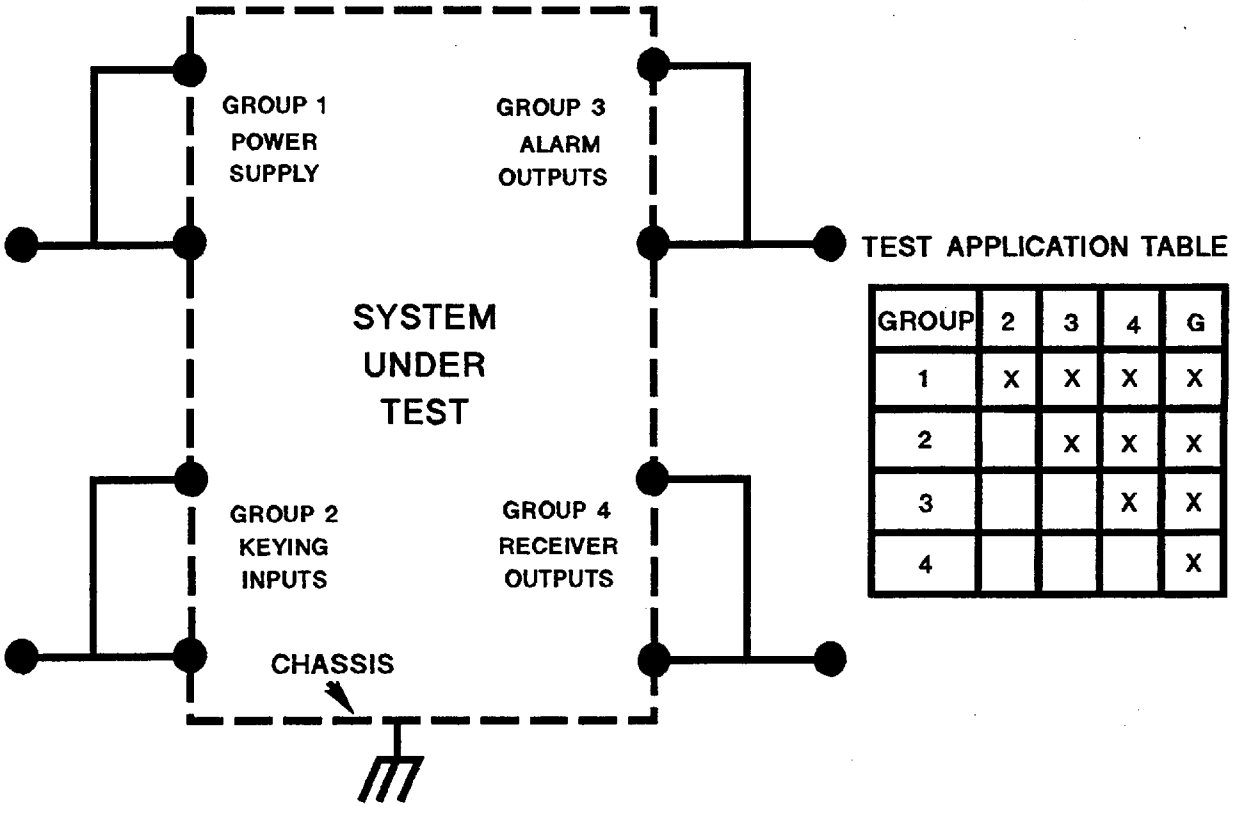

Figure 1 – Measurement of dielectric withstand

6.3.2 Power supply noise emissions

The noise reflected from the power supply to the battery, as measured in the test circuit shown in figure 2, shall not exceed the rated noise emissions in the frequency range up to 1 MHz.

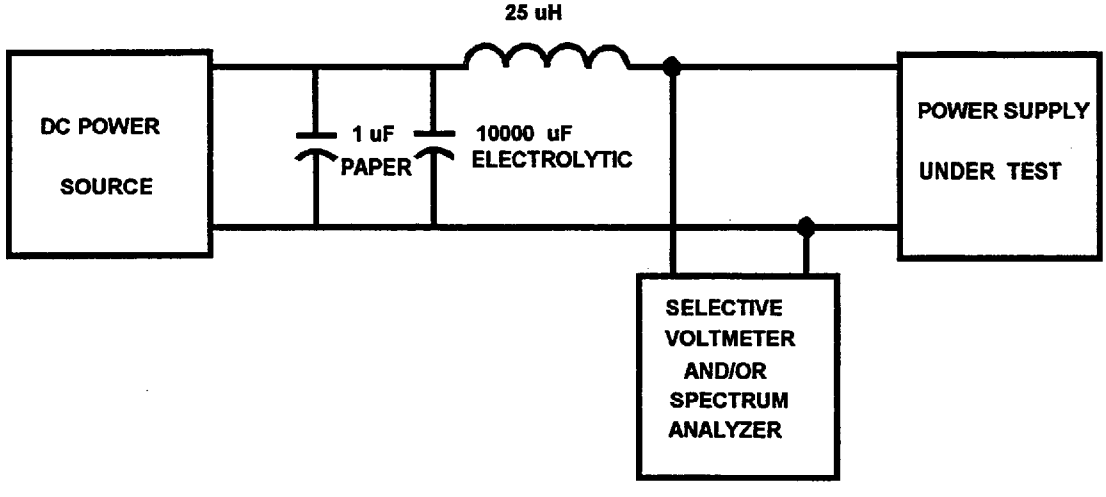

Figure 2 – Measurement of power supply noise emissions

Copyright National Electrical Manufacturers Association
Provided by IHS under license with NEMA
No reproduction or networking permitted without license from IHS
Not for Resale

6.3.3 Supply voltage abnormalities

These tests are done separately with a transmitter and a receiver to see if either is affected.

6.3.3.1 Slow variations

Slowly (>10 seconds) vary the power supply input voltage from nominal value to zero and return from zero to nominal value. The equipment shall respond as required in 5.7.4.2.

It is recommended that the test be performed on the transmitter and receiver independently, with separate power supply units and changing one supply at a time.

6.3.3.2 Interruptions

These tests simulate short and long interruptions in the supply voltage. The test circuit of figure 3 is recommended for these tests. For these tests, an FSK system shall be operated in the guard state.

The function generator shall be programmed to open the electronic switch for 20 milliseconds every 20 seconds for 10 minutes. The equipment shall respond as required in 5.7.4.2.

This test applies only to FSK equipment: Manually open and close switch 1 and then manually open and close switch 2. No unwanted trip output shall occur.

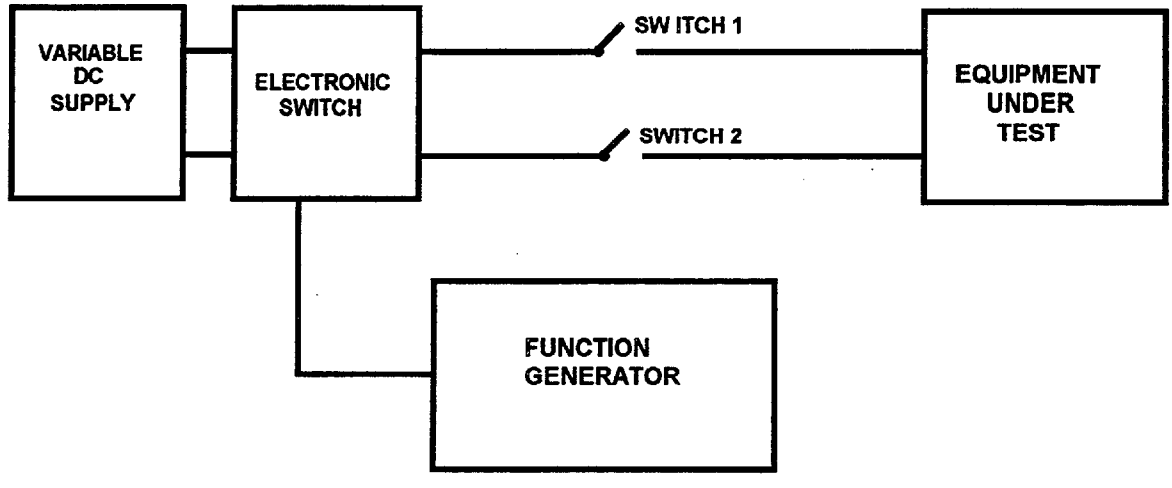

Figure 3 – Measurement of effect of power supply interruptions

6.3.4 Transmitter output impedance

A balanced resistive hybrid with a return loss of at least 30 dB in the PLC frequency range is required to make this test. Series L/C circuits enclosed in shielded cans with the recommended inductance are required to isolate the measuring selective level meter and tracking generator from the high power of the transmitter. Refer to figure 4.

a. Generator #2 is a selective level meter-tracking generator set. Set the frequency of generator #2 to 30 kHz with an output level of 0 dB (0 dB = 0.775 volts). The impedance of the generator and meter should be 50 ohms.

b. Select the inductance and capacitance values from table 4 which will resonate at 30 kHz and tune the two series circuits for resonance at 30 kHz.

Copyright National Electrical Manufacturers Association
Provided by IHS under license with NEMA
No reproduction or networking permitted without license from IHS
Not for Resale

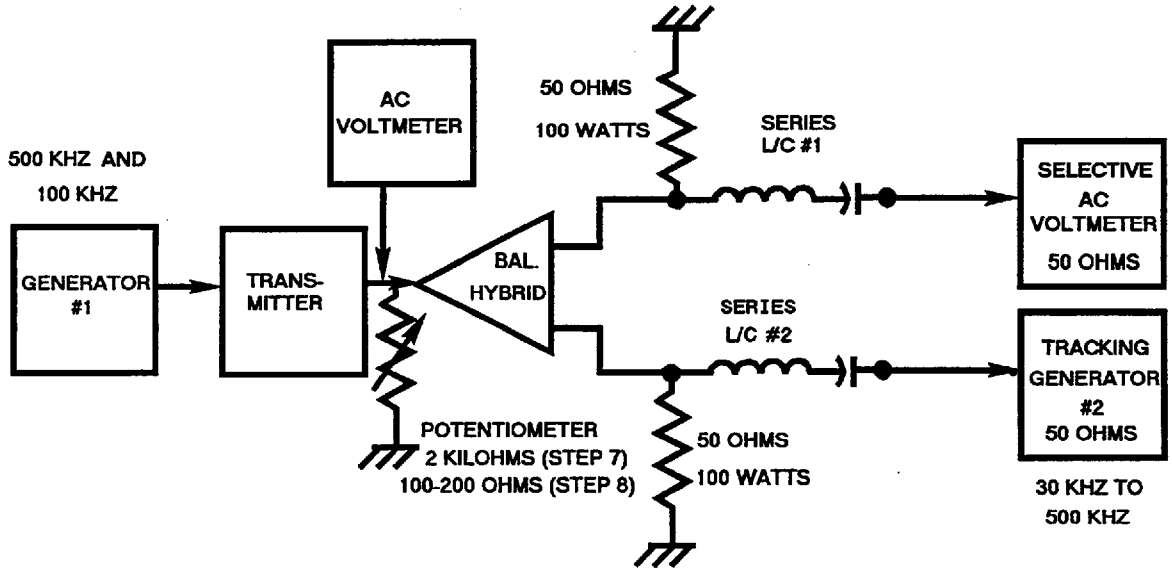

Figure 4 – Measurement of transmitter output impedance

c. Connect the measurement part of the test circuit and determine the resistance value which gives the greatest isolation between the hybrid inputs. Call this R_r.

d. Remove R_r from the test circuit.

e. Set the frequency of generator #1 to 500 kHz. Connect the transmitter output to the common port of the hybrid. Bypass all filters or frequency selective circuits in the transmitter for this test. The ac voltmeter will be used to set the output level of the transmitter.

f. Set the level of generator #1 to a value sufficient to produce an output level in the rated range of the transmitter being measured (10 watt transmitters usually are run from 1 watt to 10 watts; 100 watt units from 10 watts to 100 watts).

g. Record the level measured at 30 kHz on the selective level meter. The 2000 ohm potentiometer should be set to maximum resistance. Reduce the potentiometer resistance until there is a change in the isolation voltage reading. If the voltage decreases (more isolation), the transmitter output is greater than R_r. If the voltage increases, the transmitter output is less than R_r. Reset the potentiometer to the maximum value.

h. Disconnect the transmitter from the hybrid. Connect a multi-turn potentiometer of 100 to 200 ohms to the common hybrid port. Vary the resistance until the selective level meter reading is the same as that recorded in step g. Check the value of this resistance to determine that it agrees with the findings of step g. concerning R_r. This value of resistance is the transmitter output impedance for the selected power level at 30 kHz. The output power can be increased to the rated value and the output impedance determined at the rated output level.

i. The frequency of generator #2 shall be changed to other selected frequencies and the series circuit capacitance values selected to resonate at these frequencies. Repeat steps b. through g. for frequencies up to 300 kHz (see table 4).

Copyright National Electrical Manufacturers Association
Provided by IHS under license with NEMA
No reproduction or networking permitted without license from IHS
Not for Resale

j. Change the frequency of generator #1 to about 100 kHz to determine the transmitter output impedance at 350 kHz to 500 kHz.

k. The test specified above assumes a nominal transmitter output impedance of 50 ohms. For a 75 ohm transmitter, the values of all impedances in the test circuit shall be changed to 75 ohms. The hybrid shall also be changed to a 75 ohm unit.

Table 4 – Transmitter Output Impedance Test Values

Frequency (kHz)	Inductance (mH)	Capacitance (nF)
30	3.0	9.38
75	3.0	1.5
150	3.0	0.375
300	1.5	0.187
500	1.0	0.101

6.3.5 Return loss (RL)

Using the values of the transmitter output impedance, z, measured in 6.3.4, the calculated return loss shall meet the rated return loss requirements:

$$RL = 20\log\left|\frac{z + z_T}{z - z_T}\right|$$

where: z_T= either 50 or 75 ohms

6.3.6 Load variations

Set up the transmitter circuit to operate at rated output level into the nominal impedance. Change the load to one-half nominal load and check operation at 30, 100, 200, and 500 kHz. There shall be no clipping of the output signal and the system shall meet the noise output specification across the entire carrier-frequency range. No damage shall result when the load is replaced with a short circuit and then an open circuit.

6.3.7 Carrier-frequency stability

The purpose of this test is to check the stability of the transmitter output frequency during variations in temperature and supply voltage. These tests are specified in 6.3.23.

6.3.8 Transmitter noise emissions

The purpose of this test is to check the noise emissions from the transmitter. The test circuit required for this test is shown in figure 5 and is part of the test circuit shown in figure 15. In this test circuit the noise emissions are measured using a spectrum analyzer. The spectrum analyzer may be replaced by a frequency selective voltmeter if desired.

Copyright National Electrical Manufacturers Association
Provided by IHS under license with NEMA
No reproduction or networking permitted without license from IHS
Not for Resale

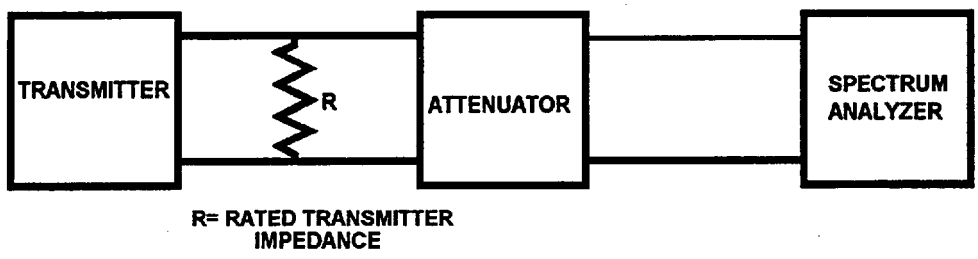

Figure 5 – Measurement of transmitter noise emissions

a. Set the spectrum analyzer to sweep the band from 30 kHz to 2000 kHz with the instrument bandwidth set equal to or less than 10 Hz.

b. Observe and record the level of all signals present in the sweep range of the spectrum analyzer.

c. All noise signals shall meet the requirements of 5.4.7.

6.3.9 Transmitter output power

The purpose of this test is to check the rated output power of the transmitter. The test circuit required for this test is shown in figure 6. Measure and record the level of the transmitter output power at each measurement step of the procedure in 6.3.23.

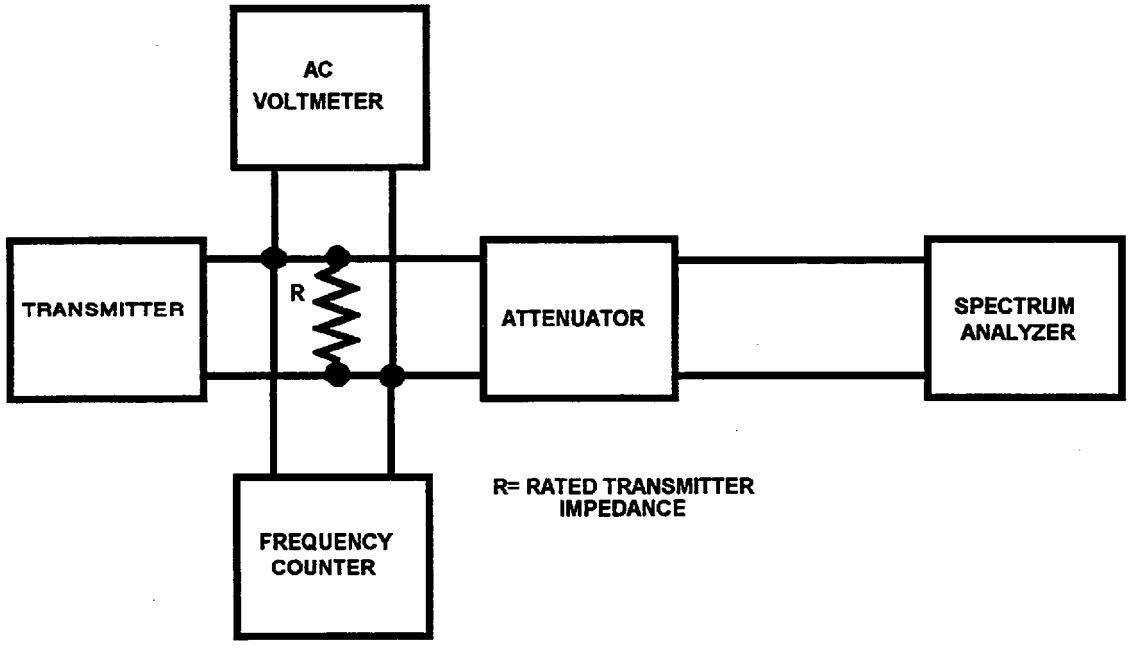

Figure 6 – Measurement of transmitter output power

Copyright National Electrical Manufacturers Association
Provided by IHS under license with NEMA
No reproduction or networking permitted without license from IHS
Not for Resale

6.3.10 Keying input

The keying input voltage shall be tested using the test circuit in figure 13. The procedure outlined in 6.3.23 shall be followed with the exception that this test is performed at only one selected frequency.

a. Apply an input keying voltage just below the "shall not operate" voltage of 5.4.8 and record the transmitter output response.

b. Apply an input keying voltage just above the "shall always operate" voltage of 5.4.8 and record the transmitter output response.

6.3.11 Carrier-frequency settings

The manufacturer shall check that the carrier design is capable of operating within the carrier-frequency tolerance given in 5.4.5 throughout the carrier-frequency range.

6.3.12 Receiver intermodulation rejection

The purpose of this test is to check the receiver's ability to reject high level signals at frequencies outside its pass band. For this test refer to figure 7. Select a receiver frequency of 150 kHz. Set the frequency of signal generator #1 to a frequency of 150 kHz plus the minimum bidirectional spacing for that transmitter/receiver combination. Set the frequency of signal generator #2 to 150 kHz plus twice the minimum bidirectional spacing for that transmitter/receiver combination. A possible third order intermodulation product for these frequencies is

$$IM = 2(150 + S) - (150 + 2S)$$

$$= 2(150) + 2S - 150 - 2S = 150 \text{ kHz}$$

where:

IM is one third order product of F1 and F2,
S is the minimum bidirectional spacing for this equipment.

If the set is a FSK set, the frequencies of F1 and F2 should be increased by the shift frequency to cause the product IM to fall on the guard frequency of the channel.

The receiver is to be set to its maximum sensitivity, and the transmitter level shall be adjusted to 15 dB above that sensitivity. Increase the level of the signal generators equally up to the maximum receiver composite level (see 5.5.2).

If the set is an ON-OFF type, turn off the transmitter and observe that the receiver does not produce a blocking signal output. If the receiver is a FSK type, shift the transmitter between the guard and the trip frequencies and observe that the receiver output follows the input signals. Also, remove the transmitter signal and observe that the receiver logic detects a loss of channel.

Copyright National Electrical Manufacturers Association
Provided by IHS under license with NEMA
No reproduction or networking permitted without license from IHS
Not for Resale

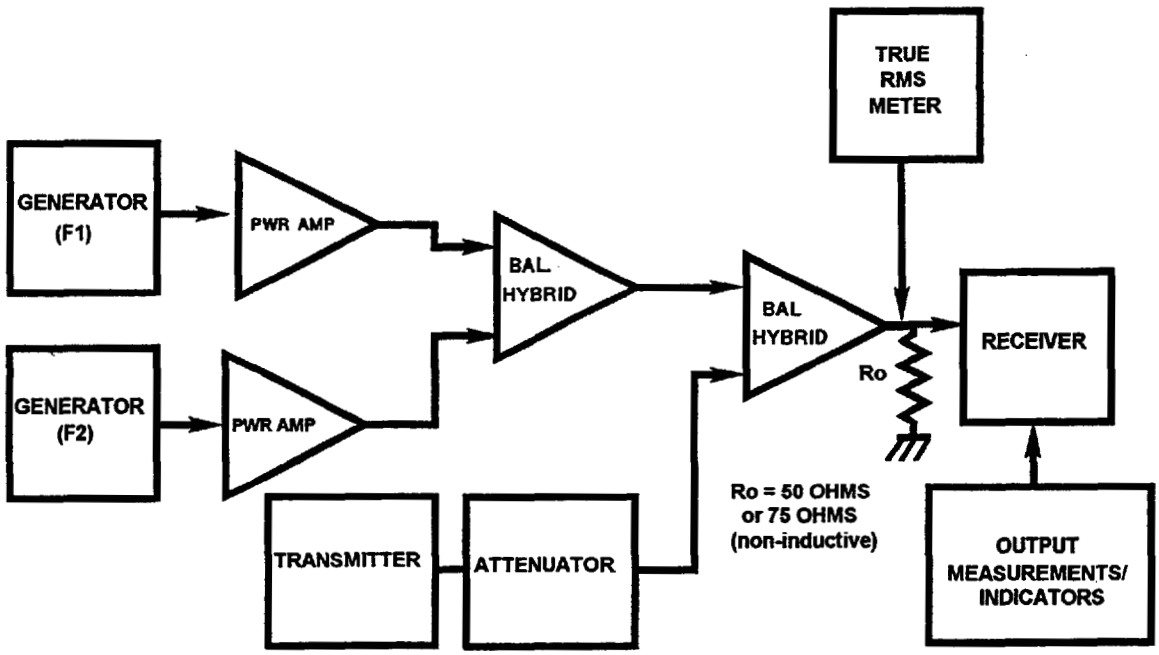

Figure 7 – Measurement of receiver intermodulation rejection

6.3.13 Maximum receiver level

The purpose of this test is to check the maximum receiver signal level. Using the test circuit of figure 8, proceed as follows.

Copyright National Electrical Manufacturers Association
Provided by IHS under license with NEMA
No reproduction or networking permitted without license from IHS
Not for Resale

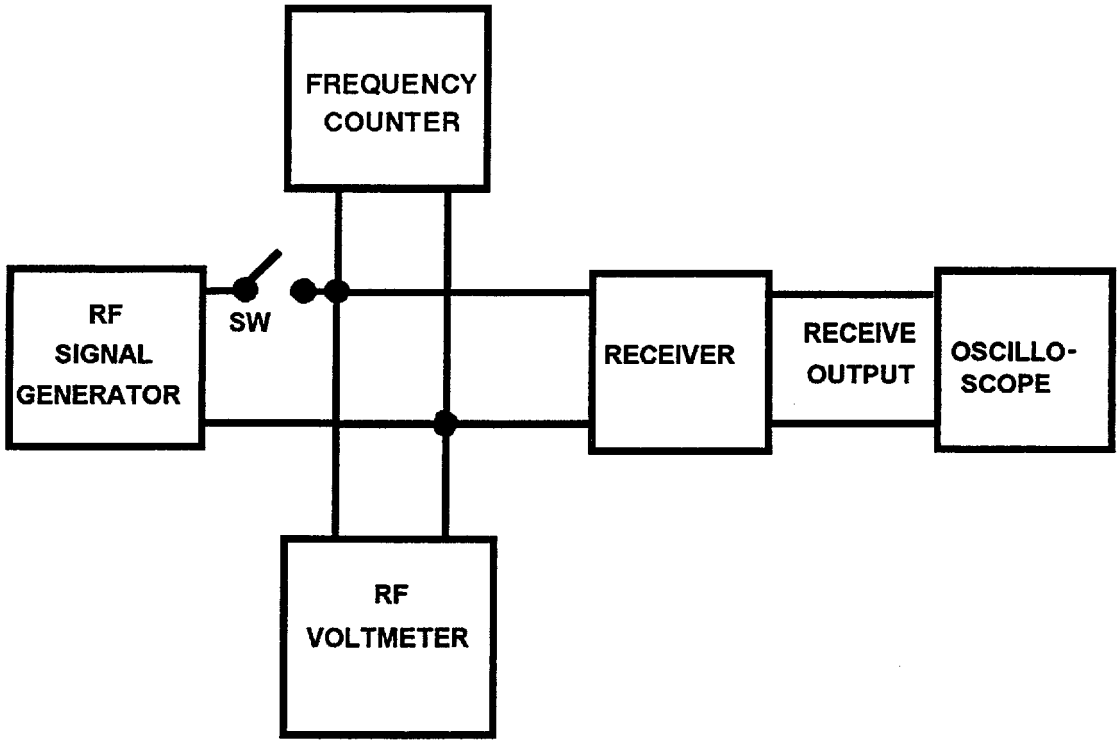

Figure 8 – Measurement of receiver level and sensitivity

a. Connect the receiver as shown in figure 8.

b. Set the receiver frequency to 30 kHz and set the RF signal generator to the receiver frequency.

c. Adjust the level of the signal generator to the receiver's rated sensitivity.

d. Adjust the receiver sensitivity until an output is obtained.

e. Adjust the level of the signal generator to the maximum receiver signal level (see 5.5.2).

f. Observe and record that the receiver output is present.

   1. For an ON-OFF receiver, the output should be at its maximum voltage or current, whichever applies.

   2. For an FSK receiver, vary the input frequency between guard and trip to determine that a corresponding guard or trip output is obtained.

g. Open the input signal switch and observe that the receiver output resets.

   1. For an ON-OFF receiver, the receiver output should disappear.

   2. For a FSK receiver, the guard and trip outputs should be as designated by the receiver logic for a loss of channel condition and an alarm signal should be present.

h. Repeat the above test for receiver frequencies of 100 kHz and 500 kHz.

Copyright National Electrical Manufacturers Association
Provided by IHS under license with NEMA
No reproduction or networking permitted without license from IHS
Not for Resale

6.3.14 Receiver sensitivity

The purpose of this test is to check the rated receiver sensitivity level. The test circuit required for this test is shown in figure 8 and is a part of the test set-up of figure 15. Perform steps a., b., and c. below at each measurement step of the procedure in 6.3.23.

a. Input a signal level equal to the receiver's rated minimum signal level (see 5.5.1).

b. Observe and record that the receiver output is present.

   1. For an ON-OFF receiver, the output shall be at its maximum voltage or current, whichever applies.

   2. For a FSK receiver, switch the input frequency between guard and trip and ensure that a corresponding guard or trip output is obtained.

c. Open the input signal switch and observe that the receiver output resets.

   1. For an ON-OFF receiver, the receiver output shall turn off.

   2. For a FSK receiver, the guard and trip outputs should be as designated by the receiver logic for a loss of channel condition and an alarm signal should be present.

6.3.15 Receiver response to maximum frequency variance

The purpose of this test is to determine proper operation of the receiver during conditions of maximum possible frequency error between transmitter and receiver. Connect the receiver as shown in figure 9.

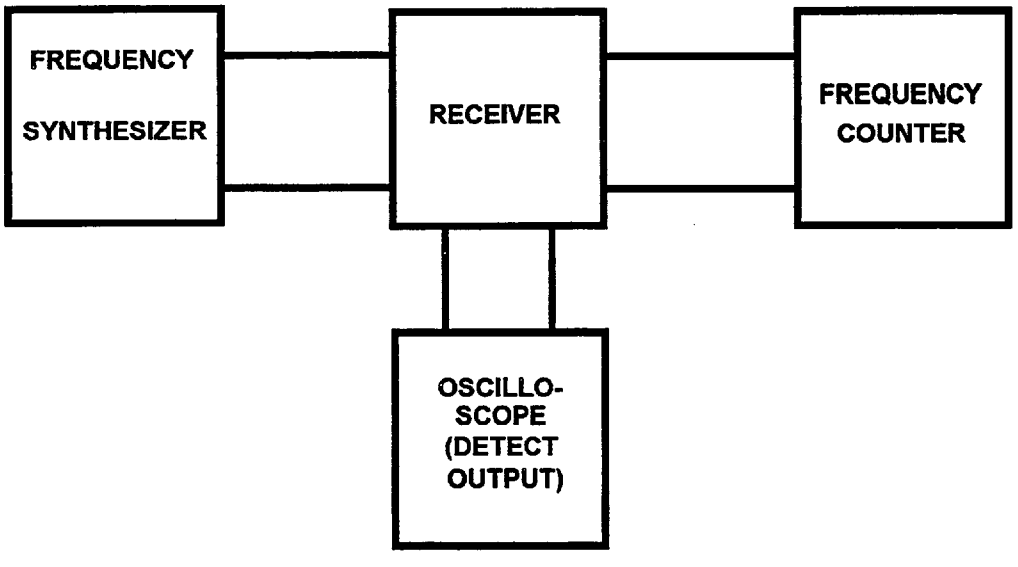

Figure 9 – Receiver response to maximum frequency variance

a. Determine the maximum allowable frequency variance from the frequency stability rating given in 5.4.6.

b. Set the receiver for maximum receiver sensitivity.

Copyright National Electrical Manufacturers Association
Provided by IHS under license with NEMA
No reproduction or networking permitted without license from IHS
Not for Resale

c. Set the synthesizer level to a value 15 dB above minimum allowable received signal level.

d. If the receiver is an ON-OFF type, set the frequency synthesizer such that the frequency counter on the IF output reads the center frequency (translated to the IF level) plus maximum frequency variance. Apply and remove the signal and observe that the receiver output follows the input signal.

e. If the receiver is a FSK type, set the frequency synthesizer such that the frequency counter on the IF output reads the guard frequency (translated to the IF level) plus total frequency variance. Shift the synthesizer frequency by nominal shift between guard and trip, and observe that the receiver output(s) correspond with the input signal.

f. Repeat parts d. and e. using negative values of the maximum frequency variance.

6.3.16 Dependability (FSK only)

The purpose of the dependability tests is to show the ability of the transmitter/receiver combination to receive a trip signal with various signal-to-noise ratios. The setup used to make this test is shown in figure 10. The timer circuit determines if the trip signal received is valid. If the trip is not received in the specified time (window) and for a duration of at least 1 millisecond, the circuit will provide an output pulse to an electronic counter #2.

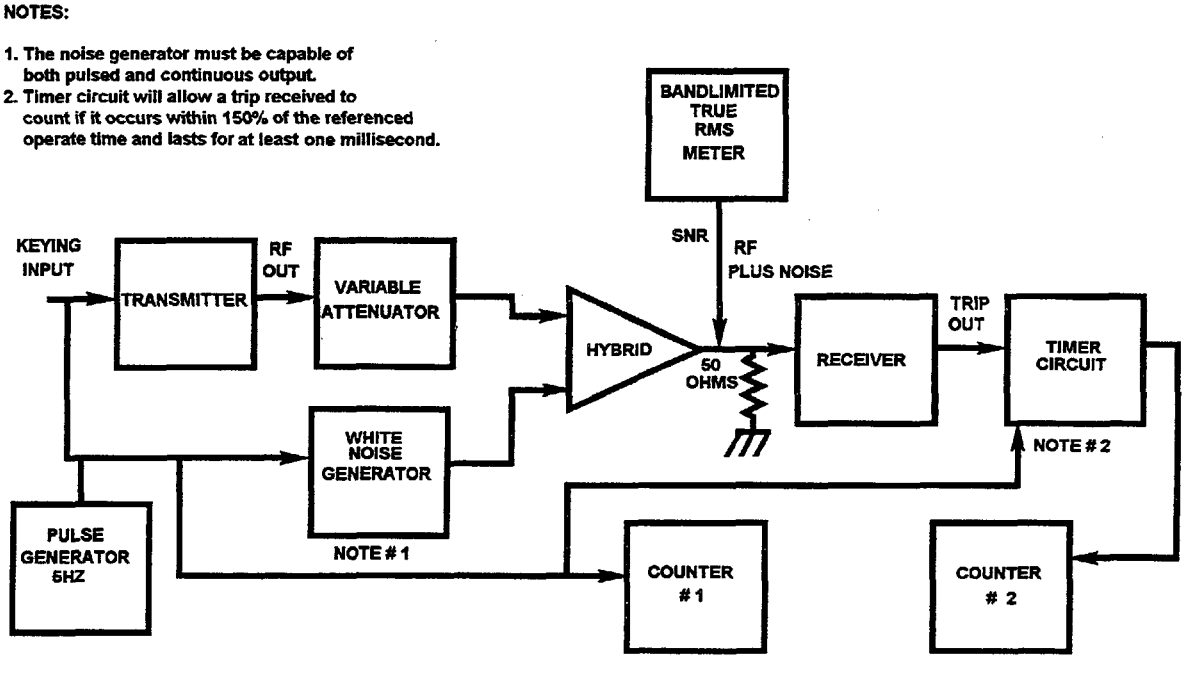

Figure 10 – Measurement of dependability

The receiver shall be aligned according to the manufacturer's published instructions. The receiver shall be set for a 15 dB margin. The same receiver shall be used for dependability and security tests.

a. Connect the transmitter/receiver combination to be tested as shown in figure 10. The intentional logic delay of the receiver shall be set to "zero" for the initial test.

b. The nominal operate time for the channel under test shall be the manufacturer's specified channel time plus any logic delay time.

Copyright National Electrical Manufacturers Association
Provided by IHS under license with NEMA
No reproduction or networking permitted without license from IHS
Not for Resale

c. The timer circuit in figure 10 should be adjusted such that it will wait for a period of 150% of the nominal operate time (the trip window). A trip must then last for a period of at least 1 ms to be valid. If a 1 ms trip is not received within 150% of the operate time, then it is counted as a failure to trip.

d. Figure 10 shows where the SNR measurements should be made. The true RMS meter must have a 3 kHz bandwidth filter centered at the carrier frequency being tested. If the transmitter exalts the output level when sending a trip signal, the SNR shall be with respect to the exalted level.

e. Set the noise level at the receiver using a continuous noise out of the generator and reference it to the trip signal level at the same point. This will set the SNR for the test.

f. The pulse generator is then set to pulse the noise ON and OFF at a 5 Hz rate and a 50% duty cycle.

g. The circuit in figure 10 will key the transmitter at the same time the noise is pulsed on. Counter #1 will count the number of noise pulses and counter #2 will count the number of unsuccessful trips. The probability of an unsuccessful trip (P_{mc}) is calculated by dividing the number of noise pulses into the number of unsuccessful trips. The test shall be continued until the uncertainty level is ±15% or less for $P_{mc} \geq 1X10^{-3}$. See sample curve for P_{mc} in Annex A, figure A-1.

h. The above measurement should be taken over a range of SNR in increments of 2.5 dB to show P_{mc} from 10_{-1} to 10_{-4}.

i. If logic delays are adjustable, steps b. through h. shall be repeated at 1/3, 2/3 and at the maximum logic delay. The values calculated in step g. are then plotted in a curve versus SNR similar to figure A-1 of Annex A. The logic delay setting shall be indicated for each curve.

6.3.17 Security (FSK only)

The purpose of the security tests is to show the ability of the transmitter/receiver combination to not trip falsely during poor SNR conditions. The setup used to make this test is shown in figure 11. Counter #1 counts the number of noise pulses. The purpose of the timer circuit is to detect false trips. It also will allow only one false trip to be counted during a given noise pulse. The output of the timer will be connected to an electronic counter #2 which will be counting the number of false trips.

Copyright National Electrical Manufacturers Association
Provided by IHS under license with NEMA
No reproduction or networking permitted without license from IHS
Not for Resale

NOTES:

1. **The noise generator must be capable of both pulsed and continuous output.**
2. **The timer circuit will allow a false operation count if the trip lasts for one millisecond, and it will allow only one count per noise burst.**

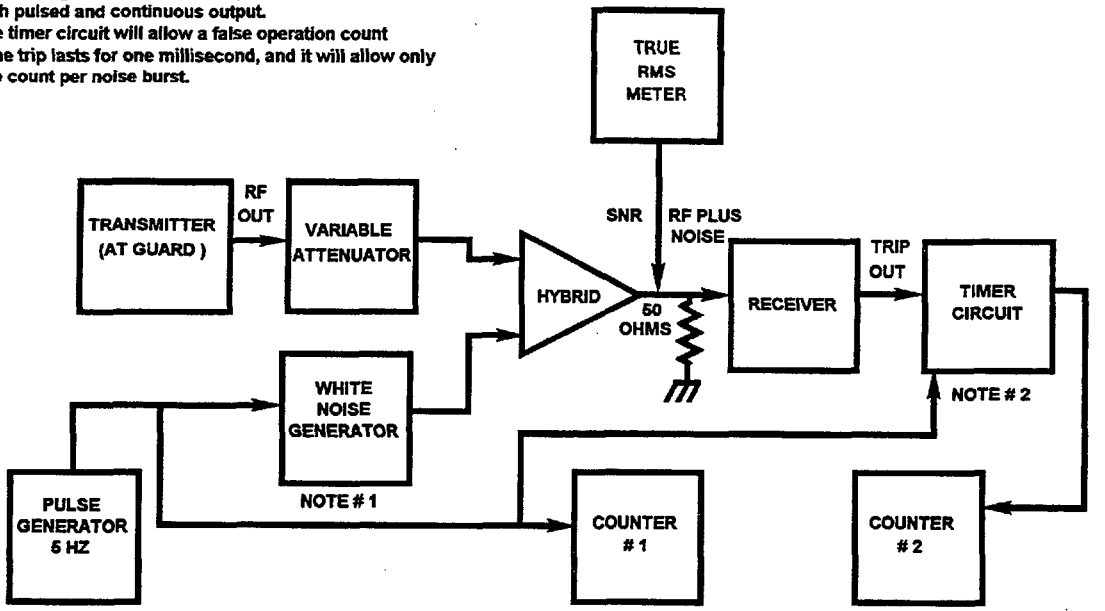

Figure 11 – Measurement of security

The receiver shall be aligned according to the manufacturer's instructions. The incoming signal shall be set at 15 dB above the loss of signal setting on the receiver. The same receiver and receiver settings shall be used for dependability and security tests.

a. Connect the transmitter/receiver combination to be tested as shown in figure 11. The intentional logic delay of the receiver shall be set to "zero" for the initial test.

b. The timer circuit in figure 11 should be adjusted such that a trip must be received for a period of at least 1 ms before it will output a pulse to the counter #2.

c. Figure 11 shows where the SNR measurements shall be made.

d. Using the continuous noise output of the generator, set the level of noise at the receive input and reference it to the signal level at the same point.

e. The noise generator is then set to pulse noise ON and OFF at a 5 Hz rate and a 50% duty cycle.

f. The circuit in figure 11 will count the number of noise pulses on counter #1 and the number of false trips on counter #2. The probability of a false trip (P_{uc}) is calculated by dividing the number of noise pulses into the number of false trips. The tests shall be continued until the uncertainty level for typical values of P_{uc} is as shown in table 5. See sample curve for P_{uc} in Annex A, figure A-2.

Copyright National Electrical Manufacturers Association
Provided by IHS under license with NEMA
No reproduction or networking permitted without license from IHS
Not for Resale

Table 5 – Percent of uncertainty requirements for security test

P_{uc}	% Uncertainty
$P_{uc} \geq 10^{-4}$	< 15
$10^{-6} < P_{uc} \leq 10^{-4}$	< 25
$P_{uc} \leq 10^{-6}$	< 63

g. The above measurement shall be taken over a range of SNR which includes the maximum value for P_{uc} to $P_{uc} \leq 10^{-6}$ in increments of 5dB.

h. If logic delays are adjustable, steps b. through g. shall be repeated at 1/3, 2/3, and the maximum logic delay. The values calculated in step f. are then plotted in a curve versus SNR similar to figure A-2 of Annex A. The logic delay setting shall be indicated for each curve.

6.3.18 Surge withstand capability

6.3.18.1 Carrier-frequency input/output terminals

The surge withstand capability shall be verified in accordance with 5.2.1. The impulse test voltage shall be applied between the carrier-frequency terminal and chassis ground with the transmitter/receiver equipment energized and operating. Refer to the test circuits in figures 12A and 12B. The load and attenuator isolate the receiver and transmitter during the tests. Each unit is done separately. A series of 5 positive and 5 negative impulse voltage waves shall be applied through a switch which is closed for the duration of the pulses only.

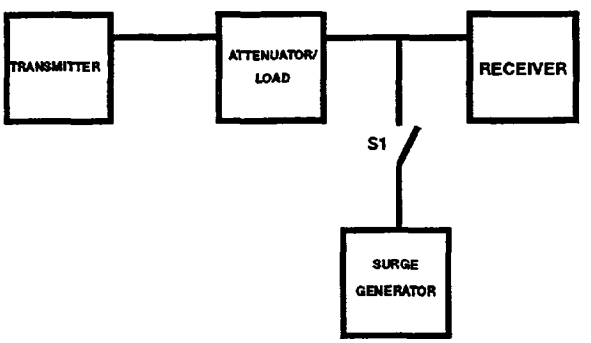

Figure 12A – Test circuit for surge withstand at receiver

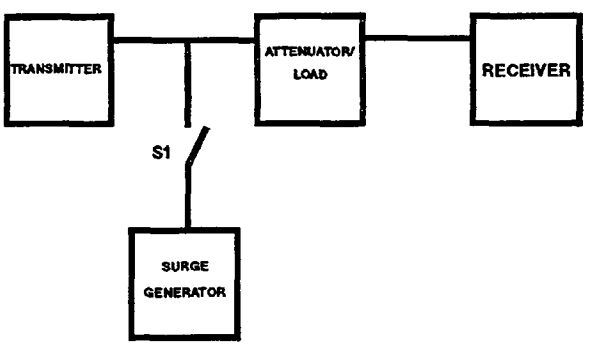

Figure 12B – Test circuit for surge withstand at transmitter

Copyright National Electrical Manufacturers Association
Provided by IHS under license with NEMA
No reproduction or networking permitted without license from IHS
Not for Resale

6.3.18.2 All other terminals

The surge withstand capability of the carrier transmitter/receiver equipment shall be verified in accordance with 5.2.2. The procedure for performing these tests shall be as described in ANSI/IEEE C37.90.1.

6.3.19 EMI susceptibility

This test applies only to equipment used in protective relaying applications. The test shall be carried out in accordance with ANSI/IEEE C37.90.2.

6.3.20 Sound level

A sound level meter, which meets ANSI S1.4 Type 1 or Type 2, with a range that includes +35 dB(A) for A-weighted sound, shall be placed at a distance of one meter from each surface of the equipment being tested. Readings shall be made and recorded on the unit containing the power supply and power amplifier and all modules usually present in a system. The maximum sound pressure level reading shall not exceed the rated sound level in 5.3.3. The system shall be operating at rated output power level for this test.

6.3.21 Operate time

The operate time shall be measured with the transmitter and receiver connected back-to-back through a non-inductive attenuator. The test circuit of figure 13 is recommended for this test. The operate time tests shall be performed at the following receiver input levels:

- At the maximum receive signal level.
- At the minimum receive signal level plus 5 dB and 15 dB margin, respectively.

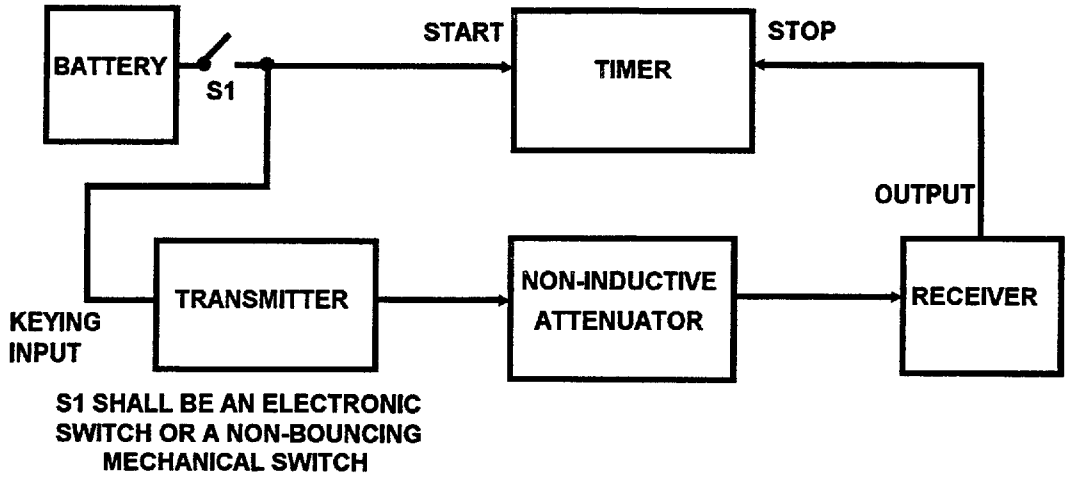

Figure 13 – Measurement of operate time

For ON-OFF equipment, the operate time shall be the time interval between keying the transmitter ON and generating a receiver output. For an FSK system, the operate time shall be the time interval between keying the transmitter from guard to trip and generating a trip output from the receiver. These tests shall be done at 30 kHz, 100 kHz, 250 kHz, and 500 kHz.

Copyright National Electrical Manufacturers Association
Provided by IHS under license with NEMA
No reproduction or networking permitted without license from IHS
Not for Resale

6.3.22 Minimum frequency spacing

The minimum spacing is usually a function of receiver selectivity and bandwidth. The spacing is also dependent on the isolation provided by the hybrids or filters in the system. The spacing will also depend on whether the system is unidirectional or bidirectional. The transmitters shall be isolated from the receivers with skewed hybrids. A circuit similar to figure 14 is recommended for this test. The hybrid loss in the receive path is about 12.5 dB. The transmitters shall be isolated from adjacent transmitters with balanced hybrids. The termination R1 shall be adjusted to give 15 dB of isolation between TX1 and TX2. The transmitter frequencies are selected to insure that first order intermodulation products do not fall in-band of the receivers at the local station. The tests shall be performed in the low end of the power-line carrier frequency range (30 to 100 kHz); in the mid-range of the power-line carrier band (200-300 kHz); and in the high range (400-500 kHz), if the equipment is designed to operate in this high range.

The transmitter frequencies at "Station A" are set to the minimum unidirectional spacing. The transmitter frequencies at "Station B" are set to give the minimum bidirectional spacing at "Station A" and "Station B". The transmitter levels shall be set for rated output. The artificial line shall be capable of adequate attenuation to give 20 dB of margin in the receivers.

The return loss at the skewed hybrid outputs shall be set by adjusting resistors R2 and R3 at the outputs to the artificial line to give 25 dB of isolation at the local transmit frequencies at the receiver inputs. The equipment shall meet all of the specifications of this standard for this isolation and at this spacing. The system shall operate properly with this isolation at the frequency spacing selected. The skewed hybrid outputs shall be shorted to ground to simulate a fault. The loss of isolation shall not cause a false output for FSK or give a false blocking output for ON-OFF.

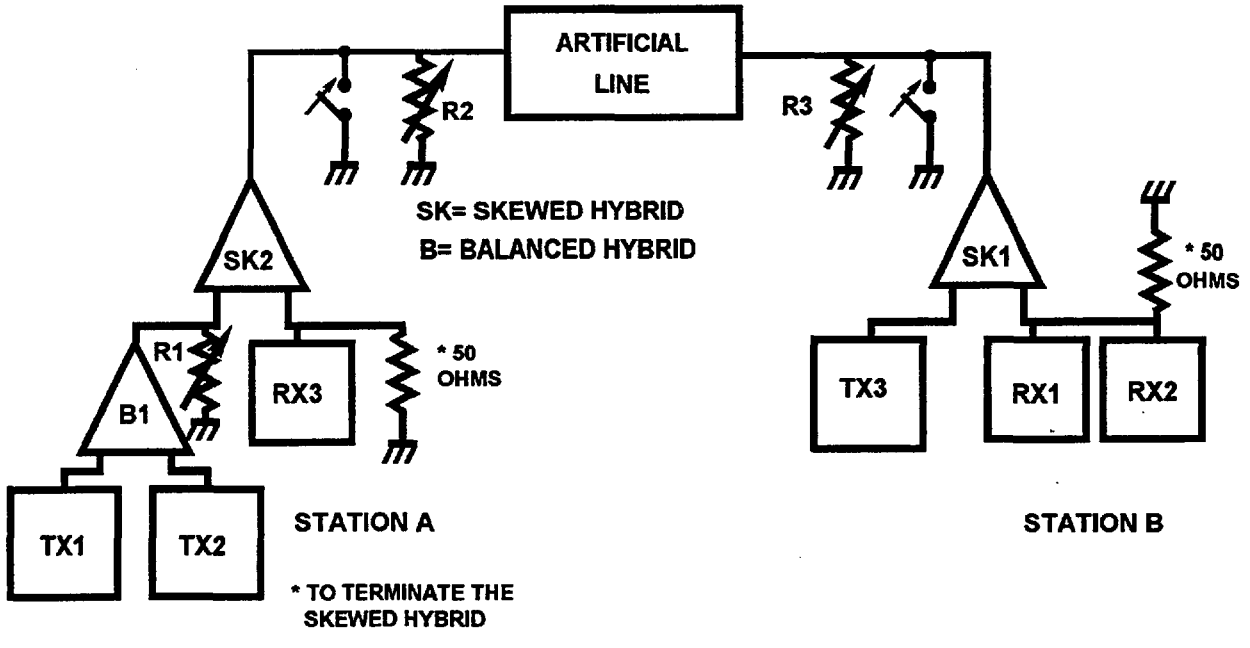

Figure 14 – Measurement of minimum frequency spacing

To determine the spacing requirements with different FSK and/or ON-OFF carrier sets, one of the transmitters and receivers at each "Station" can be replaced with a different type of bandwidth unit. Combination of transmitters and receivers can be tested as in the procedure above to determine spacings between different types and bandwidths of equipment.

Copyright National Electrical Manufacturers Association
Provided by IHS under license with NEMA
No reproduction or networking permitted without license from IHS
Not for Resale

A different minimum spacing may be required for different values of isolation between transmitters and receivers of the same type (bandwidths), and for different types of bandwidths. Sufficient testing shall be done to determine these values, or a worse value must be quoted, specifying the minimum isolation assumed.

6.3.23 Temperature/humidity test procedures

Start by connecting the carrier set as shown in figure 15. Align the transmitter and receiver according to the manufacturer's procedures at 25°C. The test shall be performed as follows:

a. Select a transmitter frequency of 30 kHz and a receiver frequency of 30 kHz.

b. Lower temperature in the chamber to -20°C.

c. Allow carrier set to stabilize in temperature chamber.

d. Perform tests as indicated in 6.3.7 through 6.3.10. The measurements shall be made at the low end and high end of the input power supply voltage range per 4.1. Verify that the results of these tests meet the rating criteria for the equipment being tested.

e. Repeat parts c. through d. for temperatures of -5°C, +10°C, +25°C, +40°C and +55°C.

f. Repeat parts a. through e. for transmitter and receiver frequencies of 150 kHz and 500 kHz.

g. Adjust the temperature in the chamber to +40°C and adjust relative humidity to 95% non-condensing. Allow unit to stand for a period of 96 hours.

h. Perform tests as indicated in 6.3.7 through 6.3.10 and 6.3.14. The measurements shall be made at the low end and high end of the input power supply voltage range per 4.1. Verify that the results of these tests meet the rating criteria for the equipment being tested.

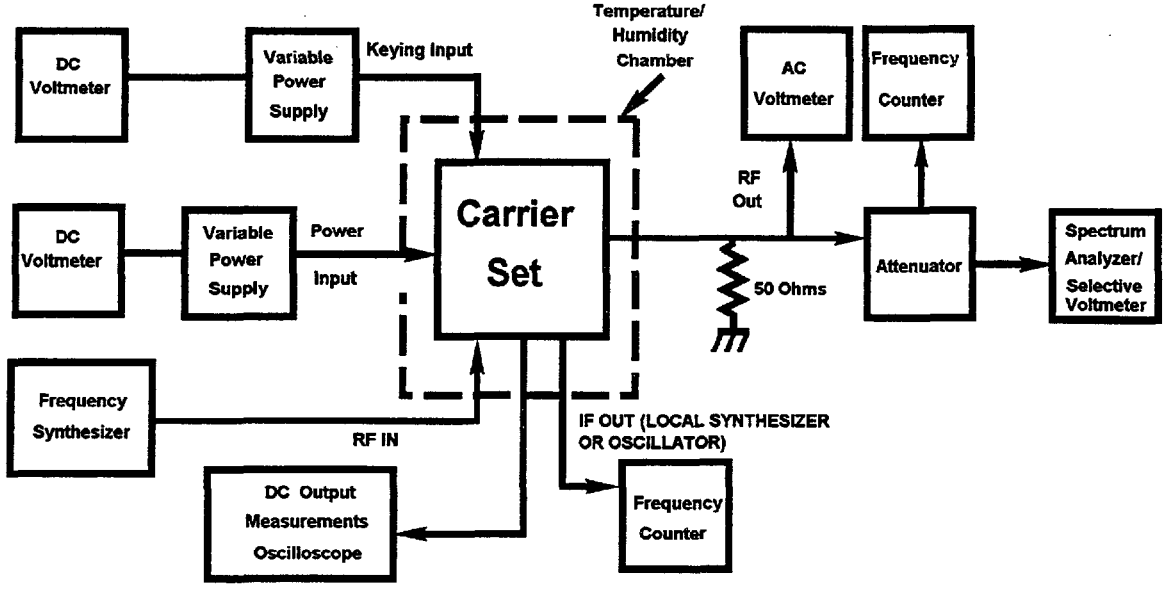

Figure 15 – Temperature/humidity measurements

Copyright National Electrical Manufacturers Association
Provided by IHS under license with NEMA
No reproduction or networking permitted without license from IHS
Not for Resale

6.4 Production tests

The following production tests shall be performed by the manufacturer on each set of single function power-line carrier transmitter/receiver equipment.

Dielectric Withstand (6.5.1)
Keying Input (6.5.2)
Transmitter Output Power (6.5.3)
Transmitter Frequency Setting Tolerance (6.5.4)
Transmitter Noise Emissions (6.5.5)
Receiver Sensitivity (6.5.6)
Alarms (6.5.7)
Functionality (6.5.8)

6.5 Production test procedures

Dielectric withstand testing shall be completed before subjecting equipment to other performance tests. The tests should be run at rated power level of the transmitter and at the user specified frequency. If no frequency has been specified, 30 kHz shall be used.

6.5.1 Dielectric withstand

Apply the rated dielectric withstand voltage, given in 5.1, between each group and chassis ground and between each group and each other group.

Group	Function
1	Power supply input
2	All keying inputs
3	All receiver outputs
4	All alarm outputs

All terminals within a group are connected together.

A test circuit similar to figure 1 is recommended for these tests. The equipment shall meet all the requirements of this standard following these tests. Dielectric withstand testing shall be completed before subjecting equipment to other performance tests.

6.5.2 Keying input

Connect a variable voltage dc power supply across the keying input terminals of the transmitter. Observe that the transmitter output is keyed for input voltages at 90% of the lowest usual service voltage and observe that the transmitter output is not keyed for input voltages less than 50% of the highest usual service voltage.

6.5.3 Transmitter output power

Connect the circuit as shown in figure 6 and adjust the transmitter for maximum rated output power. For FSK sets check that the power output at the guard and trip frequencies is as specified. For AM sets check that the output power is at the rated level in the ON state.

6.5.4 Transmitter frequency setting tolerance

Using the connections as shown in figure 6, observe the transmitter output frequency(s) to be sure that it is within rated tolerance as specified in 5.4.5. This measurement is to be conducted at the user specified frequency. If no frequency is specified by the user the test frequency shall be 500 kHz.

Copyright National Electrical Manufacturers Association
Provided by IHS under license with NEMA
No reproduction or networking permitted without license from IHS
Not for Resale

6.5.5 Transmitter noise emissions

The purpose of this test is to check the noise emissions from the transmitter. The test circuit required for this test is shown in figure 5. In this test circuit the noise emissions are measured using a spectrum analyzer.

a. Set the spectrum analyzer to sweep the band from 30 kHz to 2000 kHz with the instrument bandwidth set equal to or less than 10 Hz.

b. Observe the level of all signals present in the sweep range of the spectrum analyzer.

c. All noise signals must be below the rated transmitter noise emissions given in 5.4.7.

6.5.6 Receiver sensitivity

The purpose of this test is to check receiver sensitivity. The test circuit required for performing this test is as shown in figure 8. If a frequency is not specified by the user the test shall be performed at 30 kHz.

a. Set the receiver to its maximum sensitivity and then input a signal equal to the receiver's rated minimum signal level.

b. Observe that the receiver output is present.

   1. For an ON-OFF receiver, the output should be at its maximum voltage or current, whichever applies.

   2. For a FSK receiver, switch the input frequency between guard and trip and ensure that a corresponding guard or trip output is obtained.

c. Open the input signal switch and observe that the receiver output resets.

   1. For an ON-OFF receiver, the receiver output shall turn OFF.

   2. For a FSK receiver, the guard and trip outputs shall be as designated by the receiver logic for a loss of channel condition and an alarm indication should be present.

6.5.7 Alarms

All alarms supplied with a given carrier system shall be functionally tested to determine that they operate at the condition specified.

6.5.8 Functionality

This test should be designed such that any features or options supplied are functionally tested. It is the responsibility of the testing organization to design the test(s) to accomplish this end.

7 Manufacturing requirements

7.1 Equipment identification

The equipment identification shall be readily visible and permanently affixed. It shall contain as a minimum the manufacturer's name, catalog number, instruction book number and operating frequency(s). Rated power output and power supply input voltage should be included if not identified in the catalog number.

Copyright National Electrical Manufacturers Association
Provided by IHS under license with NEMA
No reproduction or networking permitted without license from IHS
Not for Resale

7.2 Mounting

The transmitter/receiver equipment shall be contained in a rack mount housing which conforms to the dimensional requirements of EIA-310 (ANS C83.9).

Copyright National Electrical Manufacturers Association
Provided by IHS under license with NEMA
No reproduction or networking permitted without license from IHS

Not for Resale

ANNEX A
(Informative)

Uncertainty Of Security And Dependability Measurements

For the measurements of security and dependability a reasonable certainty is required in order to have confidence in the tests. The certainty depends on the number of events observed.

If N = total number of attempts made.
E = number of events observed (false trips during security tests or failures to trip during dependability tests).

then the probability of getting the event observed with a confidence level of 95% is given by the following approximation:

$$P=\frac{E}{N}\left(1\pm\frac{2}{\sqrt{E}}\right)$$

The percent of uncertainty is given by $(2 / \sqrt{E}) \cdot 100\%$. Increasing the number of E (events observed) will result in a smaller range of uncertainty.

Plotting the probability data observed from the tests for dependability and security will result in curves such as those shown in figure A-1 and figure A-2. An example of dependability data is shown as a family of four curves in figure A-1 showing the Probability of a Missed Command, P_{mc}, (failure to trip) versus signal-to-noise ratio (SNR)in a 3000 Hz bandwidth. The points are calculated using the relation

$$P_{mc} = MC/N,$$

where: MC = number of missed commands (failures to trip)
N = the number of trials or attempts.

The range of SNR is shown for -5 dB to +15 dB. Adding bulk delay to the channel increases the dependability for the same SNR at the expense of reduced security.

Figure A-2 shows an example of data plotted from the Security test procedure. The curve shown is typical for a transfer tripping channel with no added bulk delay. Security for wideband FSK channels used for line protection and equipment protection will usually have no delay added to take advantage of their fast channel time. The points are calculated by applying the relation

$$P_{uc} = UC/N,$$

where: UC = the number of false trips or unwanted commands, and
N = the number of noise pulses.

Copyright National Electrical Manufacturers Association
Provided by IHS under license with NEMA
No reproduction or networking permitted without license from IHS
Not for Resale

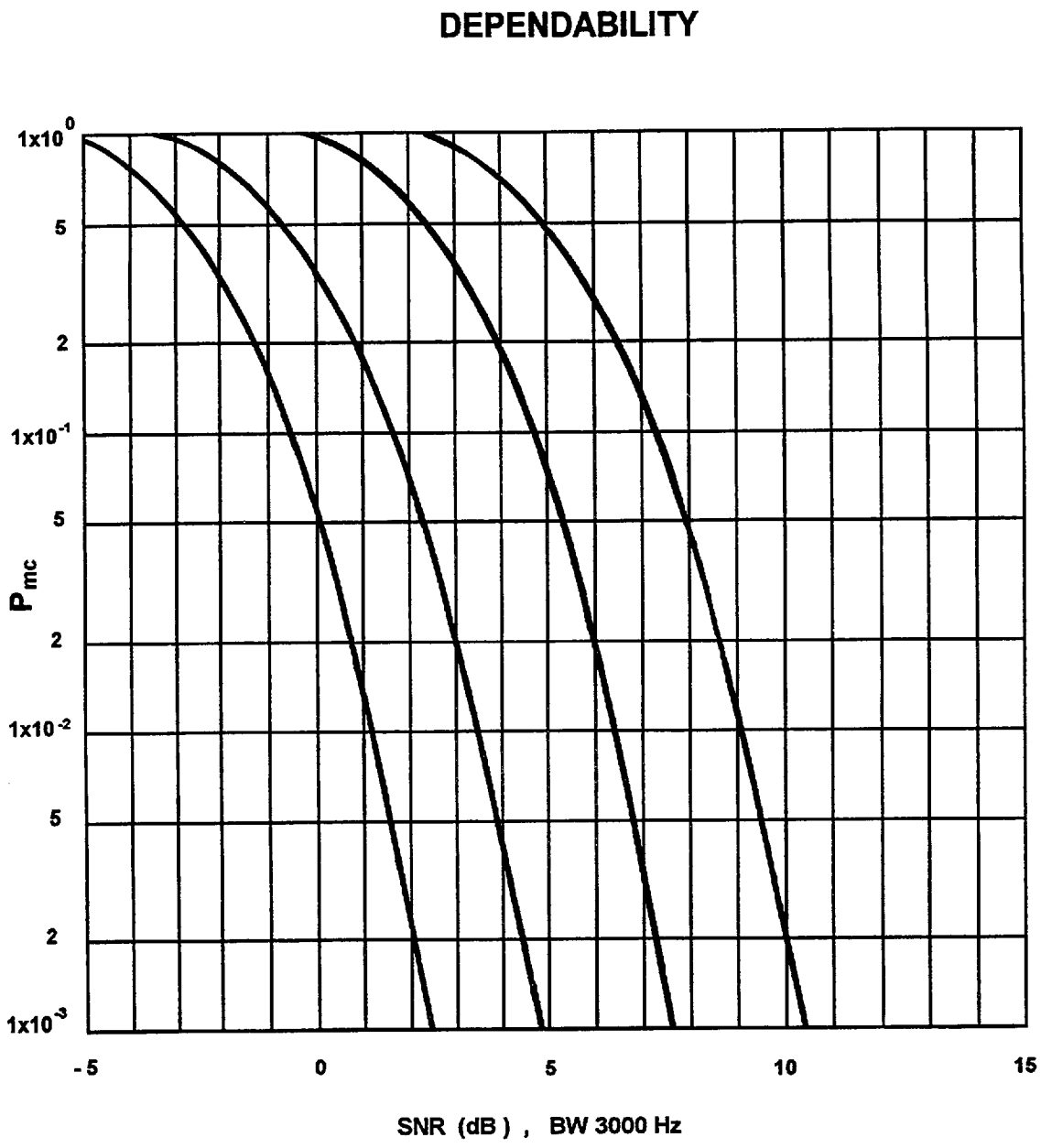

Figure A1 – Sample graph of dependability data

Copyright National Electrical Manufacturers Association
Provided by IHS under license with NEMA
No reproduction or networking permitted without license from IHS
Not for Resale

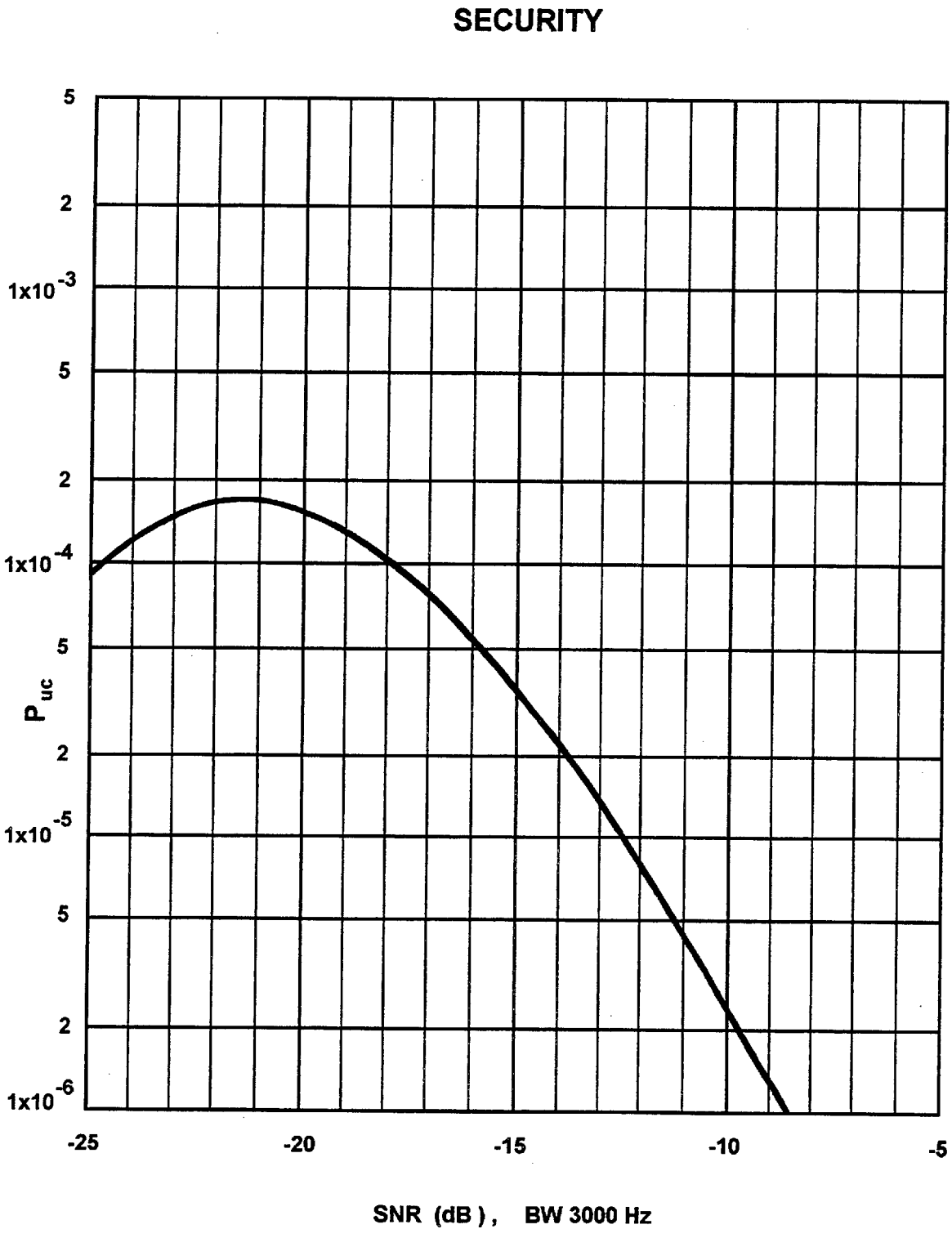

Figure A2 – Sample graph of security data

Copyright National Electrical Manufacturers Association
Provided by IHS under license with NEMA
No reproduction or networking permitted without license from IHS
Not for Resale

Copyright National Electrical Manufacturers Association
Provided by IHS under license with NEMA
No reproduction or networking permitted without license from IHS

Not for Resale