STD.NEMA C93.1-ENGL 1999 ■ 6470247 0523171 63T ■

# MERICAN NATIONAL STANDARD




## ANSI/NEMA C93.1-1999

## American National Standard

# Requirements for Power-Line Carrier Coupling Capacitors and Coupling Capacitor Voltage Transformers (CCVT)

NATIONAL ELECTRICAL MANUFACTURERS ASSOCIATION
1300 NORTH 17TH STREET, SUITE 1847, ROSSLYN, VA 22209
(703) 841-3200 FAX: (703) 841-3300

Copyright National Electrical Manufacturers Association
Provided by IHS under license with NEMA
No reproduction or networking permitted without license from IHS
Not for Resale

STD.NEMA C93.1-ENGL 1999 ■ 6470247 0523172 576 ■

**ANSI/NEMA C93.1-1999**

*American National Standard*

# Requirements for Power-Line Carrier Coupling Capacitors and Coupling Capacitor Voltage Transformers (CCVT)

*Published by*

**National Electrical Manufacturers Association**
1300 N. 17th Street
Rosslyn, Virginia 22209

Approved by ANSI May 19, 1999

© Copyright 1999 by the National Electrical Manufacturers Association. All rights including translation into other languages, reserved under the Universal Copyright Convention, the Berne Convention for the Protection of Literary and Artistic Works, and the International and Pan American Copyright Conventions.

Copyright National Electrical Manufacturers Association
Provided by IHS under license with NEMA
No reproduction or networking permitted without license from IHS
Not for Resale

# American National Standard

Approval of an American National Standard requires verification by ANSI that the requirements for due process, consensus, and other criteria for approval have been met by the standards developer.

Consensus is established when, in the judgment of the ANSI Board of Standards Review, substantial agreement has been reached by directly and materially affected interests. Substantial agreement means much more than a simple majority, but not necessarily unanimity. Consensus requires that all views and objections be considered, and that a concerted effort be made toward their resolution.

The use of American National Standards is completely voluntary; their existence does not in any respect preclude anyone, whether he has approved the standards or not, from manufacturing, marketing, purchasing, or using products, processes, or procedures not conforming to the standards.

The American National Standards Institute does not develop standards and will in no circumstances give an interpretation of any American National Standard. Moreover, no person shall have the right or authority to issue an interpretation of an American National Standard in the name of the American National Standards Institute. Requests for interpretations shall be addressed to the secretariat or sponsor whose name appears on the title page of this standard.

**CAUTION NOTICE:** This American National Standard may be revised or withdrawn at any time. The procedures of the American National Standards Institute require that action be taken to reaffirm, revise, or withdraw this standard no later than five years from the date of approval. Purchasers of American National Standards may receive current information on all standards by calling or writing the American National Standards Institute.

Published by

**National Electrical Manufacturers Association**
1300 N. 17th Street, Rosslyn, Virginia 22209

Copyright © 1999 National Electrical Manufacturers Association
All rights reserved.

No part of this publication may be reproduced in any form, in an electronic retrieval system or otherwise, without prior written permission of the publisher.

Printed in the United States of America



Copyright National Electrical Manufacturers Association
Provided by IHS under license with NEMA
No reproduction or networking permitted without license from IHS Not for Resale

## Contents

Foreword ..... v
1 Scope ..... 1
2 Referenced and related standards ..... 1
2.1 Referenced American National Standards ..... 1
2.2 Other referenced standards ..... 1
2.3 Related standards ..... 2
3 Definitions ..... 2
4 Service conditions ..... 6
4.1 Usual service conditions ..... 6
4.2 Unusual service conditions ..... 6
5 Ratings ..... 6
5.1 General ..... 6
5.2 Relaying service CCVTs ..... 14
5.3 Metering service CCVTs ..... 14
6 Testing ..... 16
6.1 General ..... 16
6.2 Design test procedures ..... 17
6.3 Production test procedures ..... 30
7 Manufacturing requirements ..... 32
7.1 Mounting ..... 32
7.2 Nameplate markings ..... 32
7.3 Certificate of test ..... 33
7.4 Symbols ..... 33
7.5 Polarity and terminal marking ..... 33
7.6 Safety devices ..... 34
7.7 High-voltage terminal ..... 35

### Figures

1 Circuit diagram of burden to be used for transient response test ..... 12
2 Limits for accuracy class 1.2R for coupling capacitor voltage transformers for relaying service ..... 15
3 Limits for accuracy classes 0.3, 0.6, and 1.2 for coupling capacitor voltage transformers for metering service ..... 15
4 Transient response test circuits ..... 29

### Tables

1 Upper ambient temperature limit ..... 6
2 Dielectric strength correction factors ..... 6
3 Voltage ratings, dielectric strengths, leakage distances, and marked ratios ..... 8
4 Radio-influence voltage ..... 9
5 Burdens for accuracy rating ..... 11
6 Burdens for transient response ratings ..... 12
7 Accuracy class limits for relaying service ..... 13
8 Limits of ratio correction factor and phase angle with voltage variations for relaying service ..... 13
9 Duration of induced-potential test ..... 31
10 Coupling capacitor voltage transformer symbols ..... 34



Copyright National Electrical Manufacturers Association
Provided by IHS under license with NEMA
No reproduction or networking permitted without license from IHS
Not for Resale

## Annexes

A Coupling capacitor and CCVT circuit diagrams....37
B Calculation of CCVT ratio and phase angle from known zero and rated burden data....39
C Drain coil loading in power line carrier coupling circuits....41

## Figures

A1 Coupling capacitor with carrier accessories....37
A2 Typical coupling capacitor voltage transformer with carrier coupling accessories....38
C1 Typical line tuner coupling capacitor connection....42



Copyright National Electrical Manufacturers Association
Provided by IHS under license with NEMA
No reproduction or networking permitted without license from IHS
Not for Resale

**Foreword** (This Foreword is not part of American National Standard ANS/NEMA C93.1-1999)

This document was developed by Accredited Standards Committee C93, Power-Line Carrier Equipment and Coupling Capacitor Voltage Transformers. During the development of the standard, the Committee considered input from a balanced group representing consumer, producer, and general-interest viewpoints, which it harmonized and integrated into the standard in its present, approved form.

Accredited Standards Committee C93 was established to coordinate, revise, and update the existing documents into an effective group of American National Standards, including this standard for coupling capacitors and CCVTs. A separate standard will be developed to cover each type of equipment described in the Committee scope.

This standard is related to American National Standard Requirements for Power-Line Carrier Line Traps, ANSI/NEMA C93.3, and American National Standard Requirements for Power-Line Carrier Line Tuning Equipment, ANSI/NEMA C93.4.

It is recognized that there are no requirements for ferroresonance suppression or primary short-circuit transient response; however, the recommended test procedures are given in 6.2.16 and 6.2.17 of the standard. If meaningful requirements are determined by the industry, they will be adopted in future revisions of this standard.

For metering service coupling capacitor voltage transformers, this standard aligns with American National Standard Requirements for Instrument Transformers, ANSI C57.13, where applicable.

Suggestions for improvement of this standard will be welcome. They should be sent to the Secretary, ASC C93, c/o National Electrical Manufacturers Association, 1300 North 17th Street, Suite 1847, Rosslyn, VA 22209.

This standard was processed and approved for submittal to ANSI by Accredited Standards Committee on Power-Line Carrier Equipment and Coupling Capacitor Voltage Transformers, C93. Committee approval of the standard does not necessarily imply that all members voted for its approval. At the time it approved this standard, the C93 committee had the following members:

| Walter Seamon, Chairman | Khaled Masri, Secretary |
|---|---|
| *Organization Represented* | *Name of Representative* |
| Edison Electric Institute | James Benton<br>Gary Miller (Alternate)<br>Robert Morton |
| Institute of Electrical & Electronics Engineers | George Morgan |
| Manufacturers | Ross Presta (Alternate)<br>Roger Ray<br>Jorge Ribeiro<br>Miriam Sanders (Alternate)<br>Tim Phillipe (Alternate)<br>Hans Backskog<br>Walter Seamon |
| Tennessee Valley Authority | Robert Bratton |



Copyright National Electrical Manufacturers Association
Provided by IHS under license with NEMA
No reproduction or networking permitted without license from IHS
Not for Resale

# for Power-Line Carrier Coupling Capacitors and Coupling Capacitor Voltage Transformers (CCVT) – Requirements

## 1 Scope

This standard applies to capacitors for coupling power-line carriers and for reducing rate of rise of breaker transient recovery voltage, and to coupling capacitor voltage transformers (CCVT) for connection to a high voltage power circuit, between line and ground, to supply a low voltage for measurement, control, and protective functions. A CCVT may or may not have provision for power-line carrier coupling.

This standard does not include bushing potential devices, or secondary compensated-field adjustable CCVTs.

## 2 Referenced and related standards

### 2.1 Referenced American National Standards

This standard is intended to be used with the following American National Standards. When these referenced standards are superseded by a revision approved by the American National Standards Institute, Inc., the revision shall apply:

| | |
|---|---|
| ANSI/NEMA C93.4-1984, | *Requirements for Power Line Carrier Line Tuning Equipment* |
| ANSI/IEEE 4-1995, | *Techniques for High-Voltage Testing* |
| ANSI/IEEE 100-1992, | *The Standard Dictionary of Electrical and Electronics Terms* |
| ANSI/IEEE C62.11-1993, | *IEEE Standard for Metal-Oxide Surge Arresters for Alternating Current Power Circuits* |
| ANSI/IEEE C62.31-1987 (R1993), | *IEEE Standard Test Specifications for Gas-Tube Surge-Protective Devices* |
| ANSI/ISA S82.01-1988, | *Safety Standard for Electrical and Electronic Test, Measuring, Controlling and Related Equipment—General Requirements* |
| ANSI/ISA S82.02-1988, | *Safety Standard for Electrical and Electronic Test, Measuring, Controlling and Related Equipment—Electrical and Electronic Test and Measuring Equipment* |
| ANSI/ISA S82.03-1988, | *Safety Standard for Electrical and Electronic Test, Measuring, Controlling and Related Equipment—Electrical and Electronic Process Measurement and Control Equipment* |

### 2.2 Other referenced standards

This standard is also intended to be used with the following standard:

NEMA Standards Publication No. 107-1964, *Methods of Measurement of Radio Influence Voltage (RIV) of High Voltage Apparatus* (R1971, 1976, 1981).



Copyright National Electrical Manufacturers Association
Provided by IHS under license with NEMA
No reproduction or networking permitted without license from IHS Not for Resale

### 2.3 Related standards

These standards are listed here for information only and are not essential for the completion of the requirements of this standard:

| | |
|---|---|
| ANSI C84.1-1989, | *Electric Power Systems and Equipment—Voltage Ratings (60 Hertz)* |
| ANSI C92.2-1987, | *Power Systems—Alternating Current Electrical Systems and Equipment Operating at Voltages above 230 Kilovolts Nominal—Preferred Voltage Ratings* |
| NEMA Standards Publication No. CC1-1993, | *Electric Power Connectors for Substations* |

## 3 Definitions

All definitions, except as specifically covered in this standard, shall be in accordance with ANSI/IEEE 100 and ANSI C57.13.

**accuracy classes:** The limits, in terms of ratio correction factor and phase angle, that have been established.

**accuracy of CCVT:** The means of expressing the degree of conformity of the actual values obtained from the secondaries to the values that could have been obtained with the marked ratio. The performance characteristics associated with accuracy of a CCVT are expressed in terms of ratio correction factor and phase angle.

**accuracy ratings:** The accuracy class followed by a burden for which the accuracy class applies.

**basic impulse insulation level (BIL):** The electrical strength of insulation expressed in terms of the crest value of a standard impulse having a front time of 1.2 microseconds and a time to half value of 50 microseconds. The tolerance range is 1.2-5.0 x 40-60 microseconds.

**basic switching impulse insulation level (BSL):** The electrical strength of insulation expressed in terms of the crest value of a standard switching impulse having a front time of 250 microseconds and a time to half value of 2500 microseconds. The tolerance range is 100-500 x 2000 - 4000 microseconds.

**burden of a CCVT:** The property of the circuit connected to the secondary terminals that determines the active and reactive power at the secondary terminals. The burden is expressed either as total ohmic impedance with the effective resistance and reactance components, or as the total volt-amperes and power factor at the specified value of voltage and frequency.

**capacitor:** In this standard, the word "capacitor" is used when it is not necessary to lay particular stress upon the different meanings of "capacitor unit" or "capacitor stack."

**capacitor divider:** A capacitor stack consisting of two capacitances connected in series so as to form a capacitive voltage dividing device (see Annex A).

**capacitor element:** An indivisible part of a capacitor consisting of electrodes separated by a dielectric.

**capacitor stack:** A capacitor unit or assembly of one or more units.

**capacitor unit:** An assembly of capacitor elements in a single container with accessible connections.



Copyright National Electrical Manufacturers Association
Provided by IHS under license with NEMA
No reproduction or networking permitted without license from IHS
Not for Resale

**carrier drain coil:** An inductor connected between the low-voltage terminal and the ground terminal of a coupling capacitor, presenting a low impedance to the flow of power-frequency current and a high impedance to the flow of carrier-frequency current.

**carrier-frequency capacitance:** The capacitance at a given frequency in the carrier-frequency range. This capacitance is given by the joint effect of the internal capacitance and of the self-inductance of the capacitor.

**carrier grounding switch:** A switch connected between the low-voltage terminal and the ground terminal of a coupling capacitor.

**carrier lead-in terminal:** The terminal to which the lead from the carrier line tuning equipment is connected.

**carrier protective device:** A device connected between the low-voltage terminal and the ground terminal of a coupling capacitor for limiting transient overvoltages between these terminals.

**coupling capacitor:** An assembly of one or more capacitor units fastened together and including high-voltage, low-voltage, and ground terminals and, if used, a coupling capacitor base (see Annex A, Figure A1).

**coupling capacitor base:** A supporting enclosure which is fastened beneath the lower capacitor unit of a capacitor stack and may include accessories for functional or protective purposes.

**coupling capacitor voltage transformer (CCVT):** A voltage transformer comprised of a capacitor divider and an electromagnetic unit so designed and interconnected that the secondary voltage of the electromagnetic unit is substantially proportional to and in phase with the primary voltage applied to the capacitor divider for all values of secondary burdens within the rating of the coupling capacitor voltage transformer (see Annex A, Figure A2).

**design tests:** Tests made by the manufacturer on each design to establish the performance characteristics and to demonstrate compliance with the appropriate standards.

**dissipation factor:** The tangent of the angle delta by which the phase difference between the voltage applied to the capacitor and resulting current deviates from 90 degrees. The dissipation factor is usually expressed in percent.

**electromagnetic unit:** The component of a CCVT connected between the intermediate-voltage terminal and ground terminal of the capacitor divider.

NOTE—An electromagnetic unit comprises essentially an inductive reactance approximately equal to the capacitive reactance at power frequency of the two capacitances ($C_1$ and $C_2$) connected in parallel. $C_1$ and $C_2$ are defined below. A transformer is used with the capacitance to reduce the intermediate voltage to the required value of the secondary voltage. The inductive reactance may be incorporated entirely or partially in the transformer.

**electromagnetic unit protective device(s):** Device incorporated in a CCVT for the purpose of limiting overvoltages that may appear across one or more of its components, or preventing sustained ferroresonance, or both.

**ferroresonance:** An oscillatory phenomenon that can exist in circuits consisting of capacitance and iron core nonlinear inductance. Ferroresonance occurs as the result of saturation of the iron core and produces a sustained distorted waveform or overvoltage, or both.

**ground terminal:** The terminal to be connected to ground.



Copyright National Electrical Manufacturers Association
Provided by IHS under license with NEMA
No reproduction or networking permitted without license from IHS
Not for Resale

**high-voltage capacitance, $C_1$:** The capacitance between the high-voltage and intermediate-voltage terminals.

**high-voltage terminal (line terminal):** The terminal to be connected to the power line.

**insulation level:** An insulation strength expressed in terms of a withstand voltage.

**intermediate voltage:** The voltage to ground at the intermediate-voltage terminal of the capacitor divider when the ground terminal of the divider is grounded directly or through a carrier drain coil.

**intermediate-voltage capacitance, $C_2$:** The capacitance between the intermediate-voltage terminal and the low-voltage or ground terminal.

**intermediate-voltage terminal:** The terminal to be connected to an intermediate circuit such as the electromagnetic unit of a coupling capacitor voltage transformer.

**leakage distance:** The length of the external insulating surface from the high-voltage terminal to the ground terminal.

**low-voltage terminal:** The terminal at the lower end of the capacitor stack.

**marked ratio:** The ratio, as stated on the nameplate, of the performance reference voltage to the secondary voltage.

**maximum rated voltage:** The highest rms value of the sinusoidal voltage between terminals that the capacitor is intended to withstand continuously. The definition is applicable to a capacitor stack for the voltage between high-voltage and low-voltage terminals, or high-voltage and ground terminals.

NOTE—Maximum rated voltage corresponds to maximum system voltage divided by $\sqrt{3}$.

**maximum system voltage:** The highest sustained rms phase-to-phase voltage under normal operating conditions and at any point on the system, excluding temporary variations due to fault conditions or the sudden disconnection of large loads.

**nominal system voltage:** A nominal rms phase-to-phase voltage value assigned to a circuit or system for the purpose of conveniently designating its voltage class.

**partial discharge:** An electrical discharge that partially bridges the insulation between electrodes.

**percent ratio:** The true ratio expressed as a percentage of the marked ratio.

**percent ratio correction:** The difference between the ratio correction factor and unity, expressed as a percentage: [(RCF-1) x 100]%.

NOTE—The percent ratio correction is positive if the ratio correction factor is greater than unity. If the percent ratio correction is positive, the measured secondary voltage will be less than the voltage applied to the high-voltage terminal divided by the marked ratio.

**performance reference voltage:** The voltage selected as the basis for determining accuracy and transient response performance, and applied to the high-voltage terminal. The performance reference voltage is obtained by multiplying the secondary voltage (115 volts) by the lower marked ratio.

**phase angle of a CCVT:** The phase displacement, in minutes (or in milliradians), between the voltages at the high-voltage terminal and the polarity-identified secondary terminal.



Copyright National Electrical Manufacturers Association
Provided by IHS under license with NEMA
No reproduction or networking permitted without license from IHS
Not for Resale

NOTE—The phase angle of a CCVT is designated by the Greek letter gamma (γ). It is positive when the secondary voltage from the polarity-identified to the polarity-unidentified terminal leads the corresponding voltage at the high voltage terminal.

**polarity:** The designation of the relative instantaneous directions of the voltages on the high-voltage terminal and the secondary terminals during most of each half cycle.

NOTE—High-voltage and secondary terminals are said to have the same polarity when, at a given instant during most of each half-cycle, the voltages on the high-voltage terminal and the polarity-identified secondary terminal are in the same direction.

**potential grounding switch:** A switch connected between the intermediate-voltage circuit and the ground terminal of a CCVT.

**production tests:** Tests made by the manufacturer on each item of equipment to verify performance characteristics.

**rated capacitance:** The value of the capacitance at maximum rated voltage and power frequency for which the capacitor is designed. This definition applies:

a) For a capacitor unit, to the capacitance between the terminals, of the unit

b) For a capacitor stack, to the capacitance between high-voltage and low-voltage terminals, or high-voltage and ground terminals of the stack

c) For a capacitor divider, to the resultant capacitance: $\frac{C_1 C_2}{C_1 + C_2}$

**ratio correction factor (RCF):** The ratio of the true ratio to the marked ratio. The voltage by the high voltage terminal is equal to the secondary voltage, multiplied by the marked ratio, multiplied by the ratio correction factor.

**secondary terminals of a CCVT:** The terminals to be connected to devices for measurement, control, or protective relaying.

**short-circuit rating:** The time in seconds during which the CCVT, while energized at the maximum rated voltage, is capable of withstanding a short-circuit directly across the secondary terminals.

**stray capacitance of low-voltage terminal:** The capacitance between the low-voltage terminal and the ground terminal.

**stray conductance of low-voltage terminal:** The conductance between the low-voltage terminal and the ground terminal.

**thermal burden rating:** The volt-ampere output that the CCVT will supply continuously at maximum rated voltage without causing the specified temperature limitations to be exceeded.

**transient response of a CCVT:** The measure of fidelity of the secondary-voltage waveform, compared with the voltage waveform at the high-voltage terminal under transient conditions.

**true ratio:** The ratio of the power-frequency root-mean-square (rms) voltage at the high-voltage terminal to the power-frequency rms voltage at secondary terminals under specified conditions.



Copyright National Electrical Manufacturers Association
Provided by IHS under license with NEMA
No reproduction or networking permitted without license from IHS
Not for Resale

# 4 Service conditions

## 4.1 Usual service conditions

a) Outdoor service.

b) Ambient temperature range: -40°C to +45°C. With regard to the temperature range. Table 1 defines the upper temperature limit conditions.

c) Maximum altitude: 3300 feet (1000 meters) above sea level.

d) Power frequency: 60 Hz.

e) Atmosphere: free of damaging fumes or excessive or abrasive dust, explosive mixtures of dust, or gases, steam, and salt spray.

f) Carrier frequency range: 30-500 kHz.

**Table 1 — Upper ambient temperature limit**

| Maximum Ambient Temperature (Degrees C) | | |
|---|---|---|
| Mean Over 1 Hour | Mean Over 24 Hours | Mean over 1 Year |
| 45 | 40 | 30 |

## 4.2 Unusual service conditions

a) Altitude above 3300 feet (1000 meters). For coupling capacitors and CCVTs applied at altitudes greater than 3300 feet (1000 meters), the dielectric strength correction factors are given in Table 2.

b) Gas-insulated substations.

c) High-voltage power cable systems.

d) Direct-current application (coupling capacitors).

**Table 2 — Dielectric strength correction factors**

| Altitude (Above sea level) | Correction factor |
|---|---|
| 3 300 feet (1000 meters) | 1.00 |
| 5 000 feet (1500 meters) | 0.95 |
| 10 000 feet (3000 meters) | 0.80 |

# 5 Ratings

## 5.1 General

### 5.1.1 Voltage ratings and marked ratios

Voltage ratings for coupling capacitors and CCVTs, and marked ratios for CCVTs, shall be as listed in Table 3.



Copyright National Electrical Manufacturers Association
Provided by IHS under license with NEMA
No reproduction or networking permitted without license from IHS
Not for Resale

### 5.1.2 Dielectric strength requirements

#### 5.1.2.1 Dielectric strength of the capacitor stack

The dielectric strength (power-frequency withstand, BIL and BSL) of the capacitor stack shall be in accordance with Table 3.

#### 5.1.2.2 Dielectric strength of the electromagnetic unit

##### 5.1.2.2.1 Dielectric strength of the intermediate-voltage circuit

The dielectric strength of the electromagnetic unit at the intermediate-voltage terminal shall be equal to the appropriate capacitor divider dielectric test values as specified in Table 3 multiplied by the ratio $C_1/(C_1 + C_2)$. The sparkover voltage of protective equipment, such as gaps, may be lower than the dielectric strength rating.

##### 5.1.2.2.2 Dielectric strength of the secondary circuit

The secondary windings of the intermediate-voltage transformer and the reactive element of any auxiliary equipment to be connected to the secondary winding(s) shall withstand a test voltage of four times normal operating voltage for 1 minute. The secondary winding(s) shall also withstand a power frequency rms dielectric test voltage of 2.5 kV for one minute between the secondary circuit and ground and between the secondary windings.

### 5.1.3 Minimum leakage distance

The minimum leakage distance of the capacitor stack shall be in accordance with Table 3.

### 5.1.4 Radio-influence voltage

The maximum radio-influence voltage of a coupling capacitor or a CCVT shall be in accordance with Table 4.



Copyright National Electrical Manufacturers Association
Provided by IHS under license with NEMA
No reproduction or networking permitted without license from IHS
Not for Resale

Copyright National Electrical Manufacturers Association
Provided by IHS under license with NEMA
No reproduction or networking permitted without license from IHS

Not for Resale

STD·NEMA C93·1-ENGL 1999 ■ 6470247 0523184 298 ■

## Table 3 – Voltage ratings, dielectric strengths, leakage distances, and marked ratios

| | | | | | | | | CCVT | | |
|---|---|---|---|---|---|---|---|---|---|---|
| | | | Minimum power-frequency withstand voltage (kV) | | | | | | Marked ratio (note 4) | |
| Nominal system voltage (note 1) (kV) | Maximum system voltage (note 2) (kV) | Maximum rated voltage (note 3) (kV) | 1 minute dry | 10 seconds wet | Minimum basic impulse insulation level (BIL) (kV) | Minimum basic switching impulse insulation level (BSL) (kV) | Minimum leakage distance (inches (mm)) | Performance reference voltage (note 4) (Volts) | Lower ratio | Higher ratio |
| Col 1 | Col 2 | Col 3 | Col 4 | Col 5 | Col 6 | Col 7 | Col 8 | Col 9 | Col 10 | Col 11 |
| 34.5 | 36.2 | 21 | 85 | 72 | 200 | - | 26 (660) | 20125 | 175:1 | 300:1 |
| 46 | 48.3 | 28 | 110 | 95 | 250 | - | 35 (890) | 27600 | 240:1 | 400:1 |
| 69 | 72.5 | 42 | 165 | 140 | 350 | - | 48 (1220) | 40250 | 350:1 | 600:1 |
| 115 | 121 | 70 | 265 | 230 | 550 | - | 79 (2010) | 69000 | 600:1 | 1000:1 |
| 138 | 145 | 84 | 320 | 275 | 650 | - | 92 (2340) | 80500 | 700:1 | 1200:1 |
| 161 | 169 | 98 | 370 | 325 | 750 | - | 114 (2900) | 92000 | 800:1 | 1400:1 |
| 230 | 242 | 140 | 525 | 460 | 1050 | - | 154 (3910) | 138000 | 1200:1 | 2000:1 |
| 345 | 362 | 209 | 785 | 680 | 1550 | 975 | 230 (5840) | 207000 | 1800:1 | 3000:1 |
| 500 | 550 | 318 | 900 | 780 | 1800 | 1300 | 350 (8890) | 287500 | 2500:1 | 4500:1 |
| 765 | 800 | 462 | 1200 | 1050 | 2425 | 1675 | 510 (12950) | 431250 | 3750:1 | 6250:1 |

NOTES

1 Values from 34.5 kV through 230 kV correspond to the preferred nominal system voltage given in ANSI C84.1, and from 345 kV through 765 kV to typical "nominal" voltages given in ANSI C92.2.

2 Values from 36.2 kV through 242 kV correspond to the maximum voltage of the tolerable zone for voltages at substations and on transmission systems given in ANSI C84.1, and values from 362 kV through 800 kV to the preferred maximum system voltages given in ANSI C92.2.

3 These values are phase-to-ground voltage corresponding to maximum system voltages divided by $\sqrt{3}$.

4 For CCVTs in this table that have a double ratio achieved by means of a tap in the secondary winding(s), the nonpolarity end of the winding shall be the common terminal. Application of performance reference voltage between the high-voltage terminal and the ground terminal will result in 115 volts across the secondary windings having the lower ratio.

**Table 4 – Radio-influence voltage**

| System voltage (kV) | | Radio-influence test Test Voltage (Note 1) (kV) | Maximum radio-influence voltage (Notes 2 and 3) (μV) |
|---|---|---|---|
| Maximum | Nominal | | |
| 36.2 | 34.5 | 21 | 125 |
| 48.3 | 46 | 28 | 125 |
| 72.5 | 69 | 42 | 125 |
| 121 | 115 | 70 | 250 |
| 145 | 138 | 84 | 250 |
| 169 | 161 | 98 | 250 |
| 242 | 230 | 140 | 250 |
| 362 | 345 | 209 | 250 |
| 550 | 500 | 318 | 500 |
| 800 | 765 | 462 | 750 |

NOTES

1 The radio-influence test voltage is the line-to-ground value of the maximum system voltage from ANSIC84.1 and ANSI C92.2.

2 Maximum permissible background voltage level will be half the radio-influence voltage, according to which test is being performed. Correction for background voltage level shall be by the rms method.

3 These maximum radio-influence voltages, as conducted radio noise, will add a negligible amount to the radio noise normally radiated from the line, even at short distances from the coupling capacitor or CCVT.

### 5.1.5 Low-voltage terminal insulation level

Coupling capacitors with a low-voltage terminal shall have a one minute, 60 Hz withstand insulation level of 4 kV rms between the low-voltage terminal and ground, or 10 kV rms if the terminal is exposed to weather.

### 5.1.6 Low-voltage terminal stray capacitance and stray conductance

The value of the stray capacitance and stray conductance at the low-voltage terminal, at any frequency in the carrier-frequency range with the electromagnetic unit disconnected from the intermediate-voltage terminal, shall not exceed 200 pF and 20 mhos (20 microsiemens), respectively.

### 5.1.7 Carrier drain coil loading, power frequency voltage drop, and insulation level

#### 5.1.7.1 Loading

There are no requirements for drain coil loading.

For an explanation and discussion of the determination of drain coil inductance refer to Annex C. The manufacturer shall provide information on drain coil inductance and current rating.

#### 5.1.7.2 Voltage drop

The voltage drop across the carrier drain coil shall not exceed 30 volts rms at power frequency and with maximum rated voltage applied to the high-voltage terminal of the capacitor.

NOTE—For an explanation and discussion of the 30 volt rms specification, see the Annexes of ANSI/ISA S82.01, ANS/ISA S82.02, ANSI/ISA S82.03.

#### 5.1.7.3 Insulation level

The basic impulse insulation level (BIL) of the carrier drain coil shall be a minimum of 10 kV at a standard impulse wave of 1.2-5.0 x 40-60 microseconds.



Copyright National Electrical Manufacturers Association
Provided by IHS under license with NEMA
No reproduction or networking permitted without license from IHS Not for Resale

### 5.1.8 Capacitance and dissipation factor of the capacitor stack

#### 5.1.8.1 Prior to dielectric tests

The stack capacitance at power frequency shall not differ from the rated value by more than -5% or +10%.

#### 5.1.8.2 After Dielectric Tests

The capacitance at power frequency shall not differ from that measured prior to the dielectric tests by more than the equivalent of one capacitor element. The dissipation factor at power frequency shall not differ from that measured prior to the dielectric tests by more than +0.1%.

NOTE—The purpose of checking the dissipation factor is to verify the uniformity of the production method and effectiveness of the processing cycle.

#### 5.1.8.3 Over the carrier-frequency range

The carrier-frequency capacitance shall not differ from the rated value by more than -20% or +50%.

### 5.1.9 Short-time overvoltage operation

The CCVT shall be capable of withstanding 140% of performance reference voltage for one minute. "Capable of withstanding" shall be interpreted to mean that, after being subjected to this duty, the CCVT shall show no damage and shall be capable of meeting the requirements of this standard.

### 5.1.10 Burdens

#### 5.1.10.1 Burdens for accuracy rating

Burdens for accuracy rating purposes shall be expressed in volt-amperes at a specified lagging power factor as listed in Table 5.

NOTES

1 Burdens are based on two secondary voltages, 120 volts and 69.3 volts, and power frequency. The burden designations and the same physical burdens are used in applying accuracy ratings to CCVTs, irrespective of the ratios or of the exact secondary voltages resulting from the voltage applied to the high-voltage terminal. For example, for those CCVTs having ratios that result in secondary voltages of 115 or 66.4 volts at performance reference voltage, the actual volt-amperes for a designated burden is reduced to 91.8% of the values listed in Table 5.

2 The burden on any two terminals affects the accuracy on all other terminals. The burden stated in the accuracy ratings is the total burden on the transformer. The accuracy class shall apply with the burden divided between the secondary outputs in any manner.

#### 5.1.10.2 Burdens for transient response rating

Burdens for transient response rating purposes shall be expressed in volt-amperes at a specified lagging power factor as listed in Table 6. Burdens are based on a 120-volt secondary voltage and power frequency. The burden shall consist of two impedances connected in parallel as in Figure 1. One impedance shall be a pure resistance *(Rp)* and the other ($R_s$ plus $X_s$) shall have a lagging power factor of 0.5. The inductive reactor shall be of the air-core type.

Burden values for transient response tests shall be 100% of the CCVT maximum rated accuracy class winding volt-amperes and 25% of the maximum rated accuracy class winding volt-amperes at 0.85 power factor.

### 5.1.11 Thermal burden rating

The thermal burden rating of a CCVT shall be specified in terms of the maximum burden that the CCVT can carry continuously at maximum rated voltage without exceeding the temperature rise, above a 30°C ambient, permitted by the dielectric materials used in construction.



Copyright National Electrical Manufacturers Association
Provided by IHS under license with NEMA
No reproduction or networking permitted without license from IHS
Not for Resale

Each winding, including the primary winding of a multiple-secondary transformer, shall be given a thermal burden rating. If only one thermal burden rating is specified, it shall be applicable to any distribution of secondary volt-amperes, including the usage of taps.

NOTE—CCVTs must not be operated with the secondary windings in closed delta because excessive current may circulate in the delta.

### 5.1.12 Short-circuit

The CCVT shall be capable of withstanding for one second, the mechanical and thermal stresses resulting from a short circuit on any secondary terminals with maximum rated voltage maintained on the high-voltage terminal. "Capable of withstanding" shall be interpreted to mean that, after being subjected to this duty, the CCVT shall show no damage and shall be capable of meeting the requirements of this standard. The temperature of the conductors in the windings of intermediate-voltage transformers, and compensating reactors under short-circuit conditions, shall be determined from calculations using the methods specified in 6.2.15. The maximum permissible temperature shall not be exceeded for the temperature classes of the transformers. The maximum permissible temperature for 55°C-rise transformers and reactors shall be 250°C; the maximum permissible temperature for 80°C-rise transformers and reactors shall be 350°C.

**Table 5 – Burdens for accuracy rating**

| Burdens* | | | Characteristics on 120-volt basis | | | Characteristics on 69.3-volt basis | | |
|---|---|---|---|---|---|---|---|---|
| Designation | Volt-amperes | Power factor | Resistance (ohms) | Inductance (henries) | Impedance (ohms) | Resistance (ohms) | Inductance (henries) | Impedance (ohms) |
| M | 35 | 0.20 | 82.3 | 1.07 | 411 | 27.4 | 0.356 | 137 |
| W | 12.5 | 0.10 | 115.2 | 3.04 | 1152 | 38.4 | 1.01 | 384 |
| X | 25 | 0.70 | 403.2 | 1.09 | 576 | 134.4 | 0.364 | 192 |
| Y | 75 | 0.85 | 163.2 | 0.268 | 192 | 54.4 | 0.0894 | 64 |
| Z | 200 | 0.85 | 61.2 | 0.101 | 72 | 20.4 | 0.0335 | 24 |
| ZZ | 400 | 0.85 | 30.6 | 0.0503 | 36 | 10.2 | 0.0168 | 12 |

* These burden designations have no significance at frequencies other than 60 Hz.



Copyright National Electrical Manufacturers Association
Provided by IHS under license with NEMA
No reproduction or networking permitted without license from IHS
Not for Resale

**Table 6 – Burdens for transient response ratings**

| Designation | Volt-amperes | Power factor | $R_p$ (ohms) | $R_s$ (ohms) | $X_s$ (ohms) |
|---|---|---|---|---|---|
| At 100% burden: | | | | | |
| ZT | 200 | 0.85 | 131.9 | 59.2 | 102.5 |
| ZZT | 400 | 0.85 | 66 | 29.6 | 51.3 |
| At 25% burden: | | | | | |
| ZT/4 | 50 | 0.85 | 527.6 | 236.7 | 410.1 |
| ZZT/4 | 100 | 0.85 | 263.8 | 118.4 | 205 |

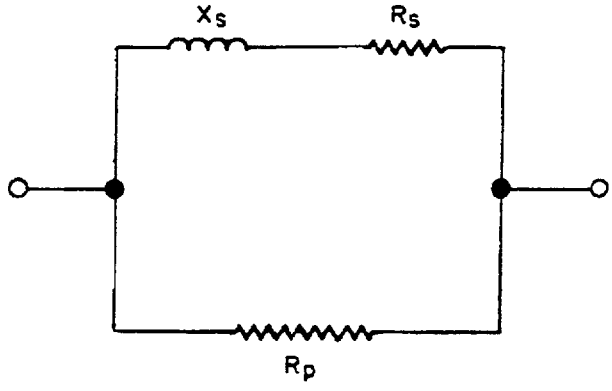


**Figure 1 – Circuit diagram of burden to be used for transient response test**

### 5.1.13 Ferroresonance suppression

Meaningful suppression requirements have not been determined at this time. The test method for determining ferroresonance suppression of a CCVT is given in 6.2.16.

### 5.1.14 Primary short-circuit transient response

Meaningful primary short-circuit transient response characteristics have not been determined at this time. The test methods for determining transient response of a CCVT are given in 6.2.17.

### 5.1.15 Effect of carrier accessories and auxiliary devices on accuracy

Any change in circuit configuration, such as closing the carrier grounding switch or adding circuit components, may cause the accuracy class limits to be exceeded.

### 5.1.16 Electromagnetic unit carrier-frequency insertion loss

The carrier-frequency insertion loss caused by the addition of the electromagnetic unit, with the potential grounding switch either open or closed, shall not exceed 0.5 dB over the carrier-frequency range.



Copyright National Electrical Manufacturers Association
Provided by IHS under license with NEMA
No reproduction or networking permitted without license from IHS
Not for Resale

### 5.1.17 Protective device ratings

#### 5.1.17.1 Electromagnetic unit gaps, MOVs, and gas discharge devices

Gaps and other protective devices operating at the intermediate-voltage level shall not operate at less than twice the intermediate voltage that occurs with the performance reference voltage applied to the high voltage terminal. MOV protective devices shall meet the requirements of ANSI/IEEE C62.11. Gas discharge protective devices shall meet the requirements of ANSI/IEEE C62.31.

#### 5.1.17.2 Carrier air gap, MOV, and gas discharge tube protective device

The carrier protective device breakdown voltage shall not be less than 2.5 kV rms at power frequency not greater than 85% of drain coil BIL for the 1.2 x 50-microsecond impulse voltage. Metal oxide protective devices shall meet the requirements of ANSI/IEEE C62.11. Gas discharge protective devices shall meet the requirements of ANSI/IEEE C62.31.

### 5.1.18 Partial discharge

When the capacitor unit is tested in accordance with 6.2.6.2, the value recorded in 6.2.6.2, procedure "c" shall not exceed the value recorded in 6.2.6.2 procedure "a" by more than any recorded variation in the background picocoulomb level.

### 5.1.19 Mechanical strength

#### 5.1.19.1 Cantilever strength

A coupling capacitor or CCVT shall be capable of withstanding the nonsimultaneous mechanical cantilever forces equivalent to those produced by winds of 100 mi/h (45m/s) and the horizontal seismic force resulting from a zero period acceleration of 0.2 g. (see 6.2.4.1)

#### 5.1.19.2 Tensile Strength

A coupling capacitor or CCVT intended for suspension mounting shall be capable of withstanding a tension force of 2.5 times its own weight (see 6.2.4.2).

**Table 7 – Accuracy class limits for relaying service**

| Limits of Ratio Correction factor | | | |
|---|---|---|---|
| **Accuracy class** | **Minimum** | **Maximum** | **Limits of phase angle** |
| 1.2R | 0.988 | 1.012 | ± 63 minutes (± 18 milliradians) |

**Table 8 – Limits of ratio correction factor and phase angle with voltage variations for relaying service**

| Applied voltage | Ratio correction factor limits | Phase angle limits |
|---|---|---|
| 90% performance reference voltage to maximum rated voltage | Accuracy class limits | Accuracy class limits |
| 25% performance reference voltage | 0.97 to 1.03 | ± 3° (± 52 mrad) |
| 5% performance reference voltage | 0.95 to 1.05 | ± 5° (± 87 mrad) |



Copyright National Electrical Manufacturers Association
Provided by IHS under license with NEMA
No reproduction or networking permitted without license from IHS
Not for Resale

### 5.2 Relaying service CCVTs

The CCVT shall be within the limits of the ratio correction factor and phase angle, from zero burden to accuracy burden rating, as long as an individual winding burden rating is not exceeded and the sum of burdens does not exceed the burden rating of the device.

#### 5.2.1 Accuracy class

Accuracy class and corresponding limits of ratio correction factor and phase angle shall be as shown in Table 7 and Figure 2.

#### 5.2.2 Allowable variation in ratio correction factor and phase angle with operating conditions

##### 5.2.2.1 Voltage variations

The limits of ratio correction factor and phase angle, for variations in applied voltage with constant linear burden, shall be as shown in Table 8.

##### 5.2.2.2 Temperature range

A CCVT shall remain within its relaying accuracy class limits over the ambient temperature range specified in 4.1.

##### 5.2.2.3 Frequency variations

Over the range of 58 Hz through 62 Hz, the ratio correction factor shall be within the limits of 0.95 to 1.05 times the 60 Hz values and the phase angle shall be within the limits of $\pm 5°$ ($\pm 87$ mrad) from the 60 Hz values.

### 5.3 Metering service CCVTs

The CCVT shall be within the limits of ratio correction factor and phase angle, from zero burden to accuracy burden rating, as long as an individual winding burden rating is not exceeded and the sum of burdens does not exceed the burden rating of the device.



Copyright National Electrical Manufacturers Association
Provided by IHS under license with NEMA
No reproduction or networking permitted without license from IHS
Not for Resale

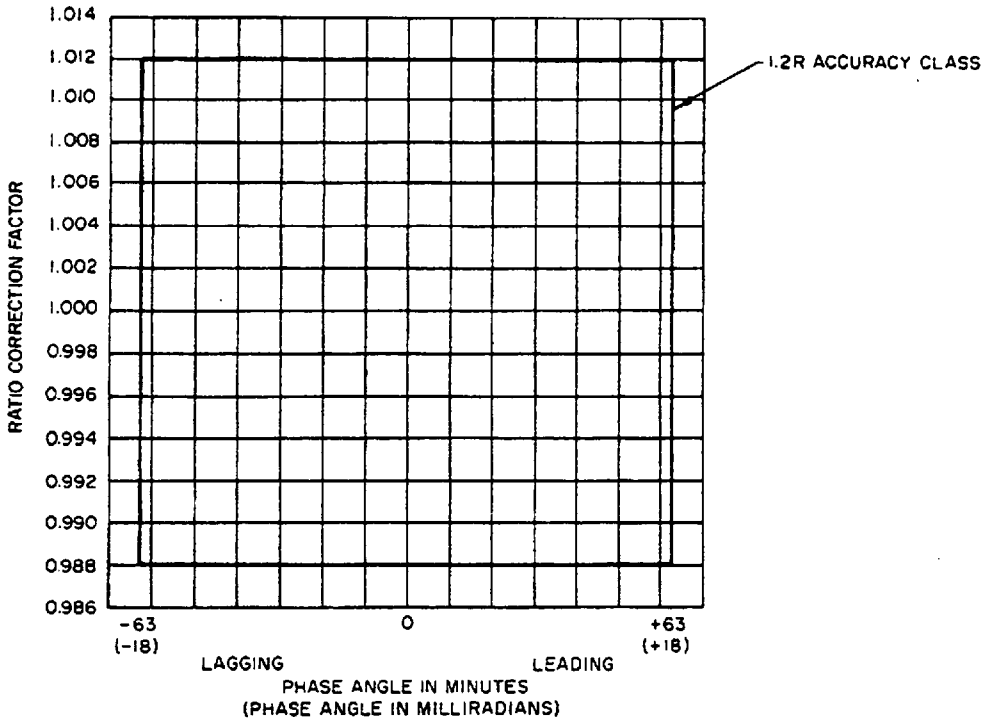


**Figure 2 – Limits for accuracy class 1.2R for coupling capacitor voltage transformers for relaying service**

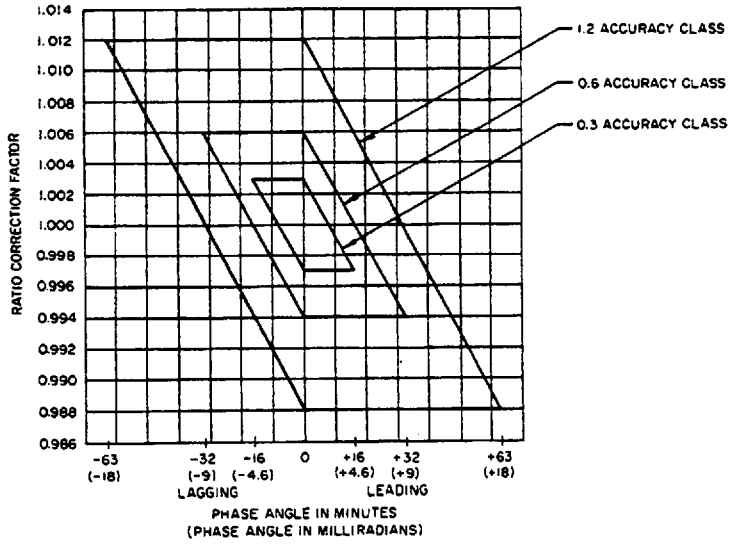


**Figure 3 – Limits for accuracy classes 0.3, 0.6, and 1.2 for coupling capacitor voltage transformers for metering service**



Copyright National Electrical Manufacturers Association
Provided by IHS under license with NEMA
No reproduction or networking permitted without license from IHS
Not for Resale

### 5.3.1 Accuracy classes

Accuracy classes and corresponding limits of ratio correction factor and phase angle shall be as shown in Figure 3. A metering service CCVT shall be assigned an accuracy class rating for each of the burdens for which it is designed.

### 5.3.2 Allowable variation in ratio correction factor and phase angle with operating conditions

#### 5.3.2.1 Voltage range

A CCVT shall remain within its metering accuracy class limits when operating continuously between 90% of performance reference voltage and maximum rated voltage.

#### 5.3.2.2 Temperature range

A CCVT shall remain within its metering accuracy class limits over the ambient temperature range specified in 4.1.

#### 5.3.2.3 Interrelation of voltage and temperature

The provisions of 5.3.2.1 and 5.3.2.2 shall be considered simultaneous effects.

## 6 Testing

### 6.1 General

### 6.1.1 Test conditions

The following test conditions are applicable:

a) The ambient temperature range for testing shall be from +10°C through +40°C, with +20°C as the reference temperature.

b) The test units shall be new and in clean, dry condition.

c) The test units shall be mounted vertically.

d) A coupling capacitor or CCVT may be tested at any altitude higher than 3300 feet (1000 meters) if the appropriate altitude correction from Table 2 and 6.2.14.6 are applied.

e) The sequence of testing shall be optional, except where otherwise noted.

### 6.1.2 Design tests

The following design tests shall be performed by the manufacturer on each coupling capacitor and CCVT design to verify that its characteristics and performance meet the requirements of this standard:

a) Dielectric (see 6.2.1).

b) Radio-influence voltage (see 6.2.2).

c) Carrier-frequency capacitance and dissipation factor (see 6.2.3).

d) Mechanical (see 6.2.4).

e) Leakage distance (see 6.2.5).

f) Partial discharge (see 6.2.6).



Copyright National Electrical Manufacturers Association
Provided by IHS under license with NEMA
No reproduction or networking permitted without license from IHS
Not for Resale

g) Low-voltage terminal insulation level (see 6.2.7).

h) Low-voltage terminal stray capacitance and stray conductance (see 6.2.8).

i) Protective device breakdown (see 6.2.9).

j) Carrier drain coil power-frequency voltage drop, and insulation level (see 6.2.10).

k) Electromagnetic Unit carrier-frequency insertion loss (see 6.2.11) (CCVTs only).

l) Accuracy (see 6.2.12) (CCVTs only).

m) Short-time overvoltage (see 6.2.13) (CCVTs only).

n) Thermal burden (see 6.2.14) (CCVTs only).

o) Short circuit (see 6.2.15) (CCVTs only).

p) Ferroresonance (see 6.2.16) (CCVTs only).

q) Transient response (see 6.2.17) (CCVTs only).

### 6.1.3 Production tests

The following production tests shall be performed by the manufacturer on each coupling capacitor and CCVT:

a) Capacitance and dissipation factor (see 6.3.1).

b) Dielectric (see 6.3.2).

c) Carrier protective device (see 6.3.3).

d) Electromagnetic unit protective device (see 6.3.4) (CCVTs only).

e) Accuracy (see 6.3.5) (CCVTs only).

f) Polarity (see 6.3.6) (CCVTs only).

## 6.2 Design test procedures

### 6.2.1 Dielectric tests of capacitor stack

#### 6.2.1.1 General

These tests shall be performed in accordance with ANSI/IEEE 4.

Test voltages, in accordance with Table 3, shall be applied between high-voltage and low-voltage terminals, or between high-voltage and ground terminals when no low-voltage terminal exists.

#### 6.2.1.2 Power-frequency withstand voltage (dry)

a) The tests should preferably be performed on a complete capacitor stack, but in case of limited test facilities a test on units may be made.

b) The test voltage shall be in accordance with Table 3, Column 4.



Copyright National Electrical Manufacturers Association
Provided by IHS under license with NEMA
No reproduction or networking permitted without license from IHS
Not for Resale

c) The test duration shall be one minute.

d) No flashover or insulation damage shall occur.

#### 6.2.1.3 Power-frequency withstand voltage (wet)

a) The tests shall be performed on a complete capacitor stack.

b) The test voltage shall be in accordance with Table 3, Column 5.

c) The test duration shall be 10 seconds.

d) No flashover or insulation damage shall occur.

NOTE—Capacitors with a capacitance different from the rated value may be used for this test provided that the housing is the same and the same voltage distribution is obtained.

#### 6.2.1.4 Basic impulse insulation level voltage tests (BIL)

a) The tests shall be performed on a complete capacitor stack.

b) The test voltage shall be in accordance with Table 3, Column 6. The crest value of each test wave shall be not less than the specified withstand voltage.

c) The tests shall be made under dry conditions.

d) The test wave shall be a 1.2-5.0 x 40-60 microsecond wave.

e) The test wave polarity shall be that polarity which produces the lowest withstand voltage on the test specimen.

f) Five consecutive impulses shall be applied to the test specimen. If flashover does not occur during any of the five consecutive impulses, the specimen shall be considered as having met the test. If two or more flashovers occur, the test specimen shall be considered as having failed the test. If only one flashover occurs, ten additional impulses shall be applied. If flashover does not occur on any of these ten tests, the specimen shall be considered to have passed the test.

g) No internal failure of capacitor elements shall occur as verified by measurements of the capacitance of individual units.

#### 6.2.1.5 Basic switching impulse insulation level voltage tests (BSL)

a) The tests shall be performed on a complete capacitor stack.

b) The tests shall be performed in accordance with Table 3, Column 7. The crest value of each test wave shall be not less than the specified withstand voltage.

c) The tests need to be performed only under wet conditions since this is the limiting case.

d) The test wave shape shall be the standard switching impulse having a front time of 250 micro-seconds, and a time to half value of 2500 microseconds. The tolerance range is 100-500 x 2000 - 4000 microseconds.

e) The test wave polarity shall be that polarity that produces the lowest withstand voltage on the test specimen.



Copyright National Electrical Manufacturers Association
Provided by IHS under license with NEMA
No reproduction or networking permitted without license from IHS
Not for Resale

f) Five consecutive impulses shall be applied to the test specimen. If flashover does not occur during any of the five consecutive impulses, the specimen shall be considered as having met the test. If two or more flashovers occur, the test specimen shall be considered as having failed the test. If only one flashover occurs, 10 additional impulses shall be applied. If flashover does not occur on any of these 10 tests, the specimen shall be considered to have passed the test.

g) No internal failure of capacitor elements shall occur as verified by measurements of capacitance of individual units.

#### 6.2.1.6 Electromagnetic unit

The electromagnetic unit shall be tested, in dry condition only, in accordance with 6.2.1.4 and 6.2.1.5 by either of the following two methods:

a) Method A: The electromagnetic unit shall be attached to the capacitor divider to form a complete CCVT with protective gaps and/or devices and ferroresonant suppression circuits.

b) Method B: The electromagnetic unit shall be tested separately except that the applied voltage wave shall be equal to the appropriate CCVT test voltage multiplied by the ratio of $C_1/(C_1 + C_2)$.

After completion of tests, the electromagnetic unit, without protective devices, shall withstand an impulse test at 120% of the impulse breakdown level of the device in accordance with 6.2.1.4.

### 6.2.2 Radio-influence voltage tests

#### 6.2.2.1 General

The equipment and general method used in determining the radio-influence voltages shall be in accordance with NEMA Standards Publication No. 107-1964, or any equivalent method that permits accurate observation of the applied voltage at which threshold ionization occurs and measures the ionization growth with increased test voltage.

NOTE—There is no existing standard for ionization instrumentations and when an alternate to NEMA Standards Publication No. 107-1964 is used, the equivalence or superiority of the proposed method must be demonstrated to the user's satisfaction. Measurements shall be made at a frequency of approximately 1 MHz.

#### 6.2.2.2 Test procedure

Prior to performing the tests, the background ionization voltage shall be determined by the identical setup for determination of the radio-influence voltage, but by applying power frequency voltage without the coupling capacitor connected.

To determine the radio-influence voltage, the test voltage corresponding to the rating shown in Table 4 shall be applied to the high-voltage terminal. The radio-influence voltages for the various ratings, as measured at the high-voltage terminals, shall not exceed the voltage limits given in Table 4 with correction for background voltage level.

### 6.2.3 Carrier-frequency capacitance and dissipation factor tests

The capacitance and dissipation factor of the coupling capacitor shall be determined over the carrier-frequency range at normal ambient temperature range, that is, -40°C and +45°C.

### 6.2.4 Mechanical tests

#### 6.2.4.1 Cantilever tests

The coupling capacitor, or CCVT, shall be subjected to the greater of the cantilever forces in accordance with 5.1.19.1 for a period of one minute. Successful completion shall be determined by absence of



Copyright National Electrical Manufacturers Association
Provided by IHS under license with NEMA
No reproduction or networking permitted without license from IHS
Not for Resale

permanent deformation of any part of the coupling capacitor and absence of oil or gas leakage, either during or within one hour after test.

In addition, the unit shall be capable of meeting all other requirements of this standard after the test.

#### 6.2.4.2 Tensile test

The coupling capacitor, or CCVT, shall be suspended using the suspension members and hardware normally supplied for this purpose. An additional tensile force of 1.5 times its own weight shall be applied axially to the coupling capacitor, or CCVT, and maintained for a period of one hour.

Successful completion shall be determined by absence of permanent deformation of any part of the coupling capacitor, or CCVT, and absence of oil or gas leakage either during or within one hour after the test.

In addition, the unit shall be capable of meeting all other requirements of this standard after this test.

### 6.2.5 Minimum leakage distance

The leakage distance shall be measured to verify the requirement given in Table 3.

### 6.2.6 Partial discharge test

#### 6.2.6.1 General

This test shall be made using a balanced partial discharge detector (or equivalent) having a minimum sensitivity of 2 pC. The test shall be made at a nominal +20°C temperature and at the extremes of the ambient temperature range, -40°C and +45°C.

These tests may be performed on the capacitor units or on an appropriately constructed test model. The test model shall be constructed and processed exactly like the production unit so that the same voltage stress conditions will be applied. If the test is conducted on a capacitor unit, corrections may be necessary for accuracy and sensitivity reduction due to the number of capacitor elements in series.

#### 6.2.6.2 Procedure

The entire test procedure described in a) through c) shall be performed as a continuous sequence without interruption of the test voltage.

a) A prorated power-frequency voltage of 1.3 times the value in Table 3, Column 3, shall be applied across the capacitor, and the partial discharge shall be measured and recorded.

b) The prorated power-frequency voltage shall be increased to a value in accordance with Table 3, Column 4, and maintained for one minute. The partial discharge shall be measured and recorded at the beginning and end of this period.

c) The prorated power-frequency voltage shall be reduced to the value specified in a) and maintained for one minute. The partial discharge shall be measured at the end of this period and recorded.

d) Results of the tests described in a) through c) shall be in accordance with 5.1.18.

### 6.2.7 Low-voltage terminal insulation test

Capacitors with a low-voltage terminal shall be subjected for not less than one minute to a test voltage between the low-voltage terminal and the ground terminal. The test voltage shall be a power-frequency voltage in accordance with 5.1.5.



Copyright National Electrical Manufacturers Association
Provided by IHS under license with NEMA
No reproduction or networking permitted without license from IHS
Not for Resale

### 6.2.8 Low-voltage terminal stray capacitance and stray conductance tests

The tests shall be performed on a capacitor unit representative of the bottom part of the capacitor under consideration. The capacitor shall be mounted on the coupling capacitor base. Measurements of stray capacitance and stray conductance shall be made at frequencies over the carrier-frequency range to demonstrate compliance with 5.1.6.

### 6.2.9 Protective device breakdown tests

Carrier protective gap sparkover setting shall be established by application of the power-frequency voltage and by application of the standard 1.2x50 microsecond impulse voltage to the gap and shall be in accordance with 5.1.17.2. The gap dimension shall be recorded (see 6.3.3).

#### 6.2.9.1 Carrier protective gaps

MOV and gas discharge breakdown shall be established according to the standard publications and values given in 5.1.17.

#### 6.2.9.2 Electromagnetic protective device breakdown

Gap sparkover ratings shall be verified by the application of power-frequency voltage to the gaps. MOV and gas discharge devices shall be tested according to the standard publications given in 5.1.17.

### 6.2.10 Carrier drain coil power-frequency voltage drop and insulation level tests

#### 6.2.10.1 Power frequency voltage drop

The carrier drain coil power-frequency voltage drop test shall be performed with maximum rated voltage applied to the capacitor stack. Alternatively, the equivalent power-frequency capacitor current may be passed through the drain coil from any power-frequency source.

#### 6.2.10.2 Insulation level

The voltage drop across the carrier drain coil shall be measured and shall meet the requirements of 5.1.7. The carrier drain coil insulation level shall be tested by application of the 10 kV standard 1.2 x 50 microseconds impulse voltage per 5.1.7.

### 6.2.11 Electromagnetic unit carrier-frequency insertion loss

Electromagnetic unit insertion loss tests shall be performed with the coupling capacitor resonated in series with a suitable variable inductor at test frequencies over the carrier frequency range. This series resonant circuit shall be terminated in a 300-ohm resistive load and shall be driven by a suitable carrier-frequency generator with an equivalent impedance of 300 ohms. Measurements shall be made with the potential grounding switch both open and closed. Measurements shall meet the requirements of 5.1.16.

### 6.2.12 Accuracy tests

#### 6.2.12.1 Calibration accuracy and precision requirements

CCVTs with accuracy class ratings of 0.3 or 0.6 shall be tested using test methods that shall give results correct to within 0.1% of true ratio and three minutes (0.87 mrad) of phase angle.

CCVTs with accuracy class ratings of 1.2 or 1.2R shall be tested using test methods that shall give results correct to within 0.2% of true ratio and six minutes (1.7 mrad) of phase angle.

The resistance and reactance of the secondary burdens used in these tests shall be within 2% of their nominal values from 90% of the performance reference voltage to the maximum rated voltage.



Copyright National Electrical Manufacturers Association
Provided by IHS under license with NEMA
No reproduction or networking permitted without license from IHS
Not for Resale

#### 6.2.12.2 Test conditions

The waveform of the applied voltage to the high-voltage terminal of the CCVT shall be free of harmonic voltages that would affect the calibration accuracy of the measuring equipment. The applied voltage wave shall be within 0.1 Hz of power frequency.

The ambient temperature surrounding the CCVT shall not deviate by more than 3°C from the top to the bottom of the capacitor divider.

The carrier drain coil or other carrier-coupling network supplied in the base housing shall be in the circuit during tests. External equipment, such as carrier line tuning equipment or fault locaters, shall not be connected.

Precautions should be taken to minimize errors introduced by electromagnetic interference or by stray capacitance to nearby objects in the test area.

Burdens shall be applied separately to each secondary winding.

#### 6.2.12.3 Test requirements

##### 6.2.12.3.1 Voltage variation

One CCVT of each maximum system voltage rating and type category assigned by the manufacturer shall be tested to demonstrate performance with voltage variation as required in Section 5, Ratings, using all burdens for the rated accuracy class assigned plus zero burden. Data shall be recorded for all secondary windings.

##### 6.2.12.3.2 Temperature variations

One CCVT of each type category assigned by the manufacturer shall be tested at 90% and 100% of performance reference voltage and at rated maximum voltage at the extremes of the temperature range at zero burden and the maximum burden for the most stringently rated accuracy class. Data shall be recorded for only one secondary winding of the CCVT, which shall be one with a lower ratio—that is, the winding across which the 120-volt base burden is connected.

##### 6.2.12.3.3 Frequency variation

The frequency variation characteristics of one relaying service CCVT of each type category assigned by the manufacturer shall be verified either by calculation or by direct measurement at the extreme values of allowable frequency deviation at the performance reference voltage at zero burden and the maximum burden for the most stringently rated accuracy class. Data shall be recorded for only one secondary winding of the CCVT, which shall be one with a higher ratio; that is, the winding across which the 69.3-volt base burden is connected.

##### 6.2.12.3.4 Effect of carrier accessories

One CCVT of each type category assigned by the manufacturer shall be tested at performance reference voltage at zero burden and the maximum burden for the most stringently rated accuracy class with the carrier grounding switch closed. Deviation of true ratio and phase angle from the normally open position condition of the carrier ground switch shall be recorded for all secondary windings.

NOTE—This information is to assist the user in metering applications.

#### 6.2.13 Short-time overvoltage tests

The complete CCVT shall have 140% of performance voltage applied to the high-voltage terminal for one minute with the maximum burden for the most stringently rated accuracy class applied to one secondary winding.



Copyright National Electrical Manufacturers Association
Provided by IHS under license with NEMA
No reproduction or networking permitted without license from IHS
Not for Resale

The accuracy characteristics of the CCVT shall be measured before and after the tests and the data shall be recorded.

### 6.2.14 Thermal burden tests

One CCVT of each type category assigned by the manufacturer shall be tested. The test shall be conducted on the completely assembled CCVT, or alternatively, it can be performed on a CCVT using an equivalent circuit similar to that shown in Figure 4(b).

All temperature-rise tests shall be made under normal conditions of cooling in an area as free from drafts as practicable. The tests shall be made with the electromagnetic unit in the attitude and under the conditions for which it is designed to operate. However, if a component is inaccessible, it may be tested separately in its normal cooling medium.

Temperature rise of the electromagnetic components, such as the series inductive reactor and the transformer, shall be measured by the increase-in-resistance method. Temperature rise of parts other than windings may be measured by thermometers or thermocouples. Temperature-rise tests shall be made at power frequency. The power factor of the burden used during temperature-rise tests is not significant. Temperature-rise tests at thermal burden rating shall be made at the maximum rated voltage.

Transformers with multiple low-voltage windings shall be tested with the rated thermal burden applied separately on each secondary winding.

#### 6.2.14.1 Ambient or cooling-air temperature

The temperature of the cooling air shall be determined from the average of the readings of several thermometers or thermocouples placed around and approximately at the same level as the center of the electromagnetic unit at a horizontal distance to prevent the coupling capacitor voltage transformer under test from influencing the readings. A distance of 6 feet or 2 meters is usually sufficient.

To minimize the errors due to time lag between the temperature of the CCVT and the variations in the ambient temperature, the thermocouples, or thermometers, shall be placed in suitable containers and shall have such proportions that not less than two hours will be required for the indicated temperature within the container to change 6.3°C if suddenly placed in air having a temperature of 10°C higher, or lower, than the previous steady-state indicated temperature within the container.

For increase-in-resistance measurements, when the ambient temperature, based on the average readings of the thermometers or thermocouples during one observation period, is not 30°C, the winding losses will not be the same as the values that would have been obtained at 30°C ambient conditions; the correction factor is:

$$\frac{T + 30°C}{T + \theta_a}$$

Where:

$T$ = 234.5°C for copper

= 225°C for aluminum

$\theta_a$ = ambient air temperature at the termination of the temperature-rise test

The temperature rise of inductive elements used in a CCVT electromagnetic unit depends primarily on winding losses, since core losses are generally held to low levels. To obtain the corrected temperature rise, the entire loss shall be assumed to be winding loss, and the measured total temperature shall be corrected using the applicable correction factor.



Copyright National Electrical Manufacturers Association
Provided by IHS under license with NEMA
No reproduction or networking permitted without license from IHS
Not for Resale

### 6.2.14.2 Temperature-rise measurements

To avoid errors due to the time required for the resistance bridge current to become constant, the time required shall be determined during the measurement of the winding resistance reference temperature, and an equal or slightly longer time shall be allowed when making ultimate and cooling-rate temperature measurements.

Measurement of temperature rise by the resistance method shall not include contact resistances. This measurement may be accomplished by means of the double-bridge method.

The temperature rise shall be considered constant when all temperatures that can be measured without shutdown at intervals of not less than 30 minutes show three consecutive readings within 1°C. During this test, the power shall not be off for more than five minutes in any two-hour period.

### 6.2.14.3 Determination of winding resistance ($R_t$) at time of shutdown

A correction shall be made for the cooling that occurs from the time when the power is shut off to the time when the hot resistance is measured.

The recommended method of determining the temperature of the winding at the time of shutdown is by measuring the resistance of the windings as the inductive element cools, immediately after shutdown, and extrapolating to the time of shutdown.

At least four measurements shall be made at intervals of not more than three minutes but not less than the time required for the measuring current to stabilize.

If the measuring current does not exceed 15% of the rated current of the winding, it may be maintained during the entire period.

### 6.2.14.4 Determination of average temperature by the resistance method

The average temperature of a winding shall be determined by either of the following equations:

$$\theta_t = \frac{R_t}{R_o}(T + \theta_0) - T$$

or

$$\theta_t = \frac{R_t - R_o}{R_o}(T + \theta_0) + \theta_0$$

Where:

$T$ = 234.5°C for copper

= 225°C for aluminum

$\theta_t$ = average temperature in degrees Celsius corresponding to the resistance of the winding at time of shutdown

$\theta_o$ = temperature in degrees Celsius corresponding to the reference resistance of the winding

$R_t$ = resistance of the winding at time of shutdown

$R_o$ = reference resistance of the winding



Copyright National Electrical Manufacturers Association
Provided by IHS under license with NEMA
No reproduction or networking permitted without license from IHS
Not for Resale

#### 6.2.14.5 Determination of temperature rise from temperature measurements

The temperature rise is the corrected total temperature minus the ambient temperature at the time the observations were made.

#### 6.2.14.6 Correction of observed temperature rise for variation in altitude

When tests are made at an altitude exceeding 3300 feet (1000 meters) above sea level, the temperature rise shall be corrected by the following method:

$$\theta_r = \theta_m\left[1 - 0.005\left(\frac{h-3300}{330}\right)\right] \quad (h \text{ in feet})$$

or

$$\theta_r = \theta_m\left[1 - 0.005\left(\frac{h-1000}{100}\right)\right] \quad (h \text{ in meters})$$

$\theta_r$ = corrected temperature rise for altitudes above 3300 feet (1000 meters)

$\theta_m$ = measured temperature rise corrected to 30°C conditions

$h$ = altitude in feet (meters) above sea level

### 6.2.15 Short-circuit tests

#### 6.2.15.1 Short-circuit rating test

One CCVT of each type category assigned by the manufacturer shall be tested to demonstrate its mechanical and thermal short-circuit ratings. The maximum rated voltage shall be maintained within +10%, -5% on the high-voltage terminal for one second with the secondary terminals short-circuited with an impedance not to exceed 0.1 ohm. The test shall be performed on both high and low ratios of each secondary winding. The secondary short-circuit current shall be measured and used to calculate the current density $I/A$, which shall not exceed thc value in the applicable equations in 6.2.15.2.

#### 6.2.15.2 Thermal short-circuit rating calculations

The calculation of the temperature rise of a winding under short-circuit conditions is based on the assumption that all of the energy developed in the winding during the period of the short circuit (five seconds or less) is stored as heat in the winding.

It is further assumed that the starting temperature $\theta_s$ of the winding when the short circuit occurs is the maximum hottest-spot temperature of the winding at 30°C ambient temperature under continuous loading at maximum rated standard burden and maximum rated voltage.

The general equation of winding temperature under short-circuit conditions is most conveniently expressed and used as the current density that will produce the maximum permissible temperature in the winding under the conditions specified in the preceding paragraph. Thus, the current density in amperes per unit area is as follows:

$$\frac{I}{A} = \sqrt{\frac{C(T+20)}{2\rho_{20}t}\ln\frac{\left(\frac{T+\theta_m}{T+\theta_s}\right)^2 + K}{1+K}}$$



Copyright National Electrical Manufacturers Association
Provided by IHS under license with NEMA
No reproduction or networking permitted without license from IHS
Not for Resale

Where:

$I$ = short-circuit current, amperes

$A$ = conductor cross section

$C$ = average thermal capacitance per unit volume, joules/(degrees Celsius-unit volume)

$\rho_{20}$ = specific resistance at 20°C, ohms-unit length

$t$ = duration of short circuit, seconds

$T$ = constant defining temperature coefficient of resistivity, degrees Celsius

$\theta_s$ = starting temperature, degrees Celsius

$\theta_m$ = maximum temperature, degrees Celsius (see 5.1.12)

$K$ = ratio of all stray conductor loss to the dc $I^2R$ loss of the winding at the starting temperature $\theta_s$

This general equation may be simplified for most practical applications, since short-time thermal ratings are based on a short-circuit duration of 1 second, and $K$ is usually negligible.

For copper, (100% International Annealed Copper Standard (IACS)):

$\rho_{20}$ = [0.679 x $10^{-6}$ ohms x in] or [1.725 x $10^{-6}$ ohms x cm]

$C$ = [58.6 J x °$C^{-1}$ x $in^{-3}$ ] or [3.576 J x °$C^{-1}$ x $cm^{-3}$ ]

$T$ = 234.5°C

and, for these conditions,

$$\frac{I}{A} = 104900\sqrt{\ln\left(\frac{T+\theta_m}{T+\theta_s}\right)^2} \quad \text{(amperes per square inch)}$$

or

$$\frac{I}{A} = 16260\sqrt{\ln\left(\frac{T+\theta_m}{T+\theta_s}\right)^2} \quad \text{(amperes per square centimeter)}$$

For aluminum (electrical conductivity grade, 62% (IACS)):

$\rho_{20}$ = [1.095 x $10^{-6}$ ohms x in] or [2.781 x $10^{-6}$ ohms x cm]

$C$ = [43.1 J x °$C^{-1}$ x $in^{-3}$ ] or [2.63 J x °$C^{-1}$ x $cm^{-3}$ ]

$T$ = 225°C

and, for these conditions,



Copyright National Electrical Manufacturers Association
Provided by IHS under license with NEMA
No reproduction or networking permitted without license from IHS
Not for Resale

$$\frac{I}{A} = 69500\sqrt{\ln\left(\frac{T+\theta_m}{T+\theta_s}\right)^2} \qquad \text{(amperes per square inch)}$$

or

$$\frac{I}{A} = 10770\sqrt{\ln\left(\frac{T+\theta_m}{T+\theta_s}\right)^2} \qquad \text{(amperes per square centimeter)}$$

If the ambient temperature is taken to be 30°C, the maximum hot-spot rise for 55°C-rise transformers and reactors is 65°C. For 80°C-rise transformers and reactors this value is 110°C. Under these conditions $\theta_s$ is 95°C for 55°C-rise transformers and reactors and 140°C for 80°C-rise transformers and reactors.

The foregoing equations may be reduced further as follows:

a) Copper

1) 55°C-rise transformers and reactors: $I/A$ = 92 000 A/in$^2$ (14 260 A/cm$^2$)

2) 80°C-rise transformers end reactors: $I/A$ = 98 900 A/in$^2$ (15 330 A/cm$^2$)

b) Aluminum

1) 55°C-rise transformers and reactors: $I/A$ = 61 600 A/in$^2$ (9550 A/cm$^2$)

2) 80°C-rise transformers and reactors: $I/A$ = 66 300 A/in$^2$ (10 270 A/cm$^2$)

#### 6.2.15.3 Available short-circuit current test

With the CCVT energized at 90% of performance reference voltage, a short circuit having an external resistance including that of the instrumentation of 2.0 ohms, then 1.0 ohm, and finally 0.5 ohm, shall be placed on each available secondary winding. The applied voltage to the high-voltage terminal shall be maintained within ±5% during the test. The secondary rms current through that winding shall be measured at each value of resistance and recorded.

NOTE—This information is to assist the user in proper application of secondary fuses.

### 6.2.16 Ferroresonance tests

The CCVT shall have been calibrated for its designated accuracy class at its performance reference voltage. The CCVT shall be energized at 110% of maximum rated voltage with essentially zero burden (that burden imposed only by the recording equipment and in no case exceeding 5 VA) on the secondary winding. The following tests shall then be conducted:

a) The terminals of the lowest-impedance secondary winding of the CCVT shall be short-circuited with an impedance not to exceed 0.1 ohm for a minimum time of 3 cycles. During the short circuit, the voltage of the power source shall not differ by more than +10%, -5% from the voltage before the short circuit and shall remain essentially sinusoidal. After the minimum time of 3 cycles, the short circuit shall be opened. The secondary-voltage waveform shall be recorded prior to, during, and after the short circuit. The test shall be performed a minimum of 30 times.

b) The potential grounding switch shall be closed and opened a minimum of 30 times. The secondary-voltage waveform shall be recorded prior to, during, and after this test.



Copyright National Electrical Manufacturers Association
Provided by IHS under license with NEMA
No reproduction or networking permitted without license from IHS
Not for Resale

After completion of these tests, accuracy verification shall be made at performance reference voltage on the winding of lowest impedance.

### 6.2.17 Transient response tests

The CCVT shall have been calibrated for its designated accuracy class at its performance reference voltage. The tests shall be performed by either Method A or Method B. Method B shall be used unless otherwise specified. The test shall be performed with the burdens applied to, and the voltage measured on, the secondary winding having the highest burden rating. The two methods are as follows:

a) Method A (high-voltage-terminal short-circuit test): With the CCVT connected as shown in Figure 4(a) and operating at the performance reference voltage for conditions of 25% and 100% rated transient response burden, the high-voltage and ground terminals shall be abruptly short-circuited.

b) Method B (intermediate-voltage equivalent circuit test): With the actual CCVT reconnected as shown in Figure 4(b) and operating at the intermediate voltage for conditions of 25% and 100% rated transient response burden, the intermediate-voltage and ground terminals shall be abruptly short-circuited.

A voltage divider shall be used to determine applied voltage. The collapse of the CCVT secondary voltage waveform and the applied voltage waveform shall be recorded by an instrument capable of measuring from dc to at least 600 Hz.

The test shall be performed twice at the peak of the applied voltage wave and twice at the zero passage of the applied voltage wave.

The tolerance for short-circuit initiation for Method A shall be $\pm$ 1 ms.

The tolerance for short-circuit initiation for Method B shall be $\pm$ 1/2 ms.



Copyright National Electrical Manufacturers Association
Provided by IHS under license with NEMA
No reproduction or networking permitted without license from IHS
Not for Resale

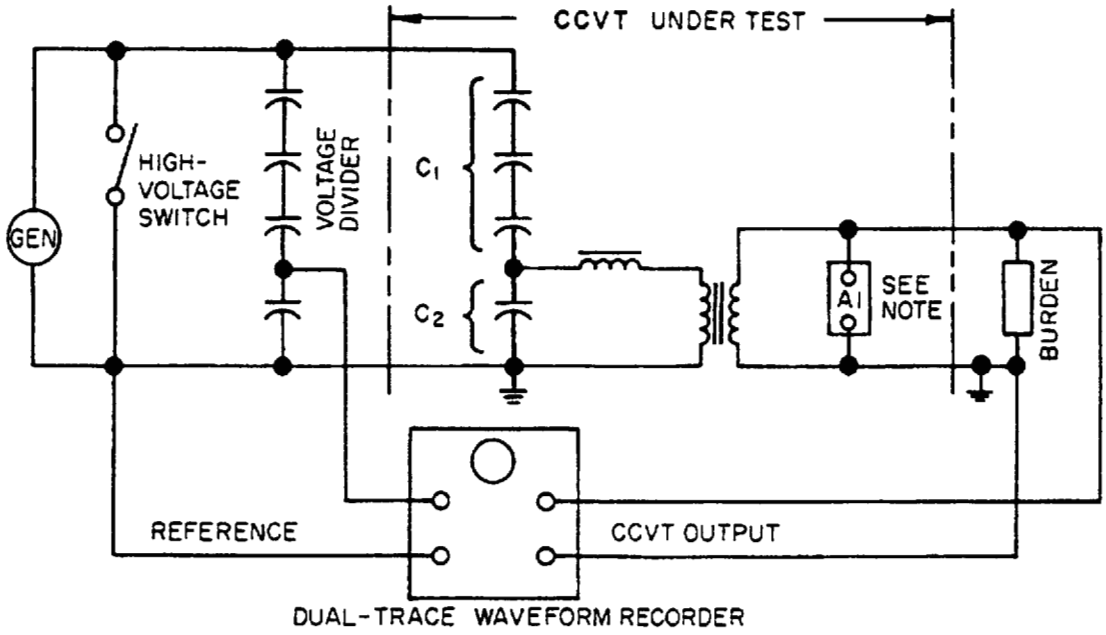


*(a) Circuit for High-Voltage-Terminal Short-Circuit Test*

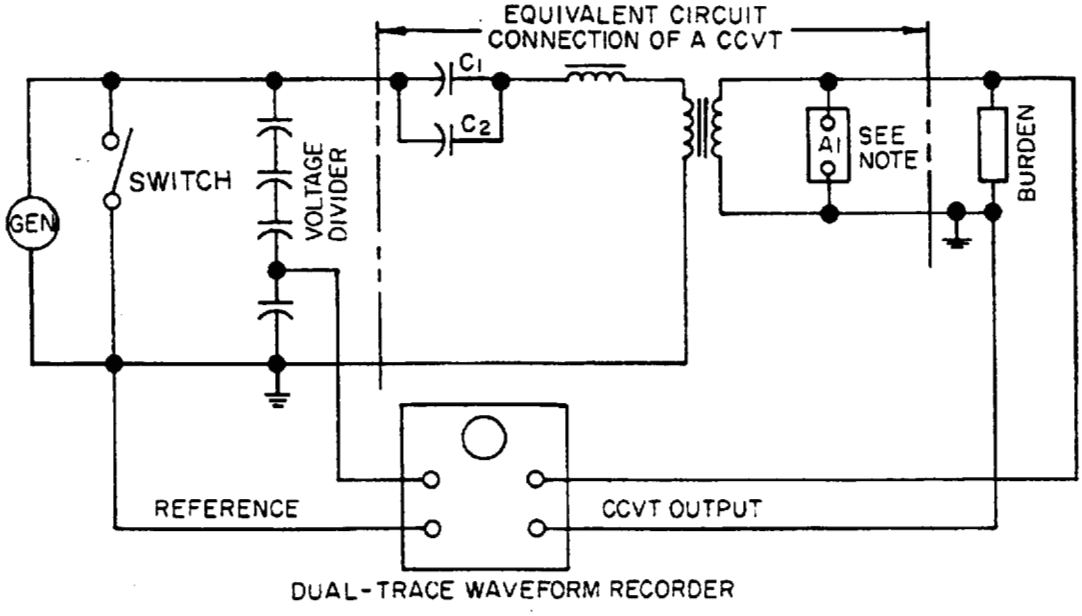


*(b) Circuit for Intermediate-Voltage Equivalent Circuit Test*

NOTE: Network A1 is the manufacturer's normal secondary-circuit configuration.

**Figure 4 – Transient response test circuits**



Copyright National Electrical Manufacturers Association
Provided by IHS under license with NEMA
No reproduction or networking permitted without license from IHS
Not for Resale

### 6.3 Production test procedures

#### 6.3.1 Capacitance and dissipation factor measurements

##### 6.3.1.1 Before dielectric tests

The capacitance and dissipation factor of the capacitor unit shall be measured using a method that minimizes errors due to harmonics and to accessories. The test shall be conducted at power frequency at rated voltage. The value of capacitance and dissipation factor shall be recorded. The measured value of capacitance shall be in accordance with 5.1.8.1.

When an intermediate-voltage terminal is fitted, the capacitance between the intermediate and low-voltage terminals ($C_2$) shall also be measured and the value recorded.

##### 6.3.1.2 After dielectric tests

The capacitance and dissipation factor of each capacitor unit shall be measured after the dielectric tests using the same atmospheric conditions and method as in 6.3.1.1. The test shall be conducted at power frequency and the same test voltage as used before the dielectric tests.

The values of the measurements shall be recorded, and shall be in accordance with 5.1.8.2.

#### 6.3.2 Dielectric tests

##### 6.3.2.1 Capacitor unit

Every capacitor shall be subjected to a power-frequency withstand voltage test in accordance with Table 3, Column 4, for a duration of one minute, dry.

The voltage shall be applied between the high-voltage terminal and the ground terminal, with the intermediate-voltage terminal, if any, floating.

The production dielectric test may be made on individual units of a coupling capacitor at the prorated voltage across the unit based on the test voltage of the assembly.

##### 6.3.2.2 Electromagnetic unit

**6.3.2.2.1** The primary circuit of the electromagnetic unit shall withstand an induced-potential test of four times the performance reference voltage multiplied by:

$$\frac{C_1}{(C_1 + C_2)}$$

A voltage shall be applied to a secondary winding with all other windings open. One end of each winding shall be grounded. When the test voltage levels exceed the sparkover level of protective gaps, the protective gaps shall be disconnected for the test.

The test, if made at power frequency, will overexcite the transformer. Therefore, the frequency of the applied potential should be such as to prevent saturation of the core. Ordinarily, this requirement necessitates the use of a frequency of 120 Hz or higher. When frequencies higher than 120 Hz are used, the severity of the test is abnormally increased, and for this reason the duration of the test should be reduced in accordance with Table 9.

The voltage should be started at one-third, or less, of the full value and increased gradually to full value within 15 seconds. After being held for the duration of time specified in Table 9, the voltage should be gradually reduced within 15 seconds to one-third of the maximum value, or less, and the circuit opened.



Copyright National Electrical Manufacturers Association
Provided by IHS under license with NEMA
No reproduction or networking permitted without license from IHS Not for Resale

**6.3.2.2.2** The reactive elements in the secondary circuit of the electromagnetic unit shall withstand a test voltage of four times normal operating voltage. The duration of the test shall be based on the frequency of the test voltage in accordance with Table 9.

**6.3.2.2.3** Each winding of the transformer in the electromagnetic unit shall be tested separately, and shall withstand a 2.5 kV rms power frequency applied potential test for one minute between the winding and ground and between windings. The winding-to-ground test shall not apply to windings that are permanently grounded.

A suitable current-sensitive failure detection device shall be provided. The voltage change across the test transformer at failure may not easily be detected by observation of the input voltmeter.

The voltage should be started at one-third, or less, of the full value and increased gradually to full value within 15 seconds. After being held for 1 minute, the voltage should be gradually reduced within 15 seconds to one-third of the maximum value, or less, and the circuit opened.

**Table 9 – Duration of induced-potential test**

| Frequency (hertz) | Duration (seconds) |
|---|---|
| 120 or less | 60 |
| 180 | 40 |
| 240 | 30 |
| 360 | 20 |
| 400 | 18 |

### 6.3.3 Carrier protective device

The carrier protective device breakdown rating shall be verified by application of power-frequency voltage and impulse voltage to the device and shall be in accordance with 5.1.17.

Alternatively, the gap setting established by test may be verified by mechanical gapping.

### 6.3.4 Electromagnetic unit protective device

Device breakdown ratings shall be verified by the application of power-frequency voltage to the device.

NOTE—Production tests are not required by this standard for arrester, MOV, and gas discharge devices.

### 6.3.5 Accuracy

Ratio and phase-angle measurements shall be made at the performance reference voltage and power frequency at the maximum burden for each rated accuracy class and at zero burden. For a metering and relaying service CCVT, the test shall be performed on the full and tapped portion of each secondary winding and the data recorded. Calibration accuracy and conditions of test in 6.2.12.1 and 6.2.12.2 shall apply.

### 6.3.6 Polarity

The polarity marks shall be verified for each secondary winding. The test shall be performed on the complete CCVT. When an accuracy test is performed on a winding of the CCVT, polarity verification will be indicated by the accuracy test results.

NOTE—The source voltage should always be impressed between the high-voltage terminal and ground. If the CCVT is energized from the secondary winding, excessively high voltage may be present in the intermediate-voltage circuit leading to damage of CCVT components from the resulting higher-than-normal currents.



Copyright National Electrical Manufacturers Association
Provided by IHS under license with NEMA
No reproduction or networking permitted without license from IHS
Not for Resale

# 7 Manufacturing requirements

## 7.1 Mounting

Coupling capacitors and CCVTs shall be rigid column structures and shall be either base or suspension mounted.

## 7.2 Nameplate markings

### 7.2.1 Coupling capacitor or CCVT

The base housing of the coupling capacitor or CCVT shall contain a nameplate with the following minimum information:

a) Manufacturer's name

b) Serial or identification number

c) Manufacturer's type designation

d) Manufacturer's instruction book number

e) Nominal system voltage

f) Maximum rated voltage

g) Rated BIL

h) Total rated stack capacitance

i) Weight

j) Serial numbers and stacking order of capacitor units comprising the capacitor stack

k) Marked ratio (CCVTs only)

l) Accuracy class ratings for applicable burdens (CCVTs only)

m) Power frequency (CCVTs only)

### 7.2.2 Coupling capacitor unit

The following minimum information shall appear on the nameplates of all coupling capacitor units intended for stacking:

a) Manufacturer's name

b) Serial or identification number

c) Type designation

d) Maximum rated voltage

e) Measured unit capacitance and dissipation factor at rated voltage (high-voltage terminal to low-voltage terminal)

f) Measured intermediate voltage capacitance, $C_2$ (where applicable)



Copyright National Electrical Manufacturers Association
Provided by IHS under license with NEMA
No reproduction or networking permitted without license from IHS Not for Resale

### 7.3 Certificate of test

A certificate of test, including the following information, shall be provided for each metering service CCVT:

a) Manufacturer's name

b) Manufacturer's type

c) Manufacturer's serial number

d) Nominal system voltage and marked ratio

e) Production accuracy test readings at performance reference voltage with zero burden and maximum burden for each rated accuracy class for each winding. Notation shall be made as to the presence or absence of the carrier drain coil. If the drain coil is present, the value of the drain coil will be recorded.

f) Adjustment tap settings during calibration

g) Measured capacitance of each capacitor unit and dissipation factor at rated voltage

h) Date of test

i) Initials of factory tester

### 7.4 Symbols

CCVT symbols shall have the significance indicated in Table 10.

### 7.5 Polarity and terminal marking

The relative instantaneous polarity of the leads or terminals of CCVTs shall be clearly indicated by permanent markings that cannot be easily obliterated. It is not necessary to mark the high-voltage terminal of the capacitor divider.

When the polarity is indicated by letters, the letter P shall be used to distinguish the leads or terminals connected to the intermediate-voltage winding and the letter X (also Y and Z if multiple secondary windings are used) shall be used to distinguish the leads or terminals connected to the secondary winding.

In addition, each lead or terminal, except voltage adjusting leads, which are to be designated by the manufacturer, shall be numbered such as: P1, P2, X1, X2. If more than three secondary windings are used, they shall be identified X, Y, Z, and W for four windings, X, Y, Z, V, and W for five windings, etc.

P1 and X1 (also Y1 and Z1, if used) shall be of the same polarity.

When taps or leads are provided as secondary terminals, the leads or terminals shall be lettered as described previously and numbered X1, X2, X3, etc., or Y1, Y2, Y3, etc. The lowest and highest numbers indicate the full winding, and intermediate numbers indicate the terminals in their relative order. When X1 is not used, the lowest number of the two terminals in use shall be the polarity-identified terminal.



Copyright National Electrical Manufacturers Association
Provided by IHS under license with NEMA
No reproduction or networking permitted without license from IHS
Not for Resale

**Table 10 – Coupling capacitor voltage transformer symbols**

| Symbol | Significance |
|---|---|
| : (colon) | Used as a ratio expression to show ratio to 1 between line-to-ground voltage (primary) and secondary voltage.<br><br>Example: CCVT for a connection line-to-ground with a single untapped secondary 69 000 volts (115 000 volts, grounded Y) Ratio 600:1 |
| & (ampersand) | Used to denote ratings between line-to-ground voltage (primary) and separate electrically isolated secondary voltages.<br><br>Example: CCVT for a connection line-to-ground with a single untapped secondary 69 000 volts (115 000 volts, grounded Y) Ratio 600 & 1000:1 |
| / (single slant line or virgule) | Used to denote ratio ratings between line-to-ground voltage (primary) and secondary voltages involving a tapped secondary.<br><br>Example 1: CCVT for a connection line-to-ground with a single tapped secondary 69 000 volts (115 000 volts, grounded Y) Ratio 600/1000:1<br><br>Example 2: CCVT for a connection line-to-ground with three secondaries, two tapped 69 000 volts (115 000 volts, grounded Y) Ratio 600/1000:1 & 600/1000 & 600:1 |

### 7.6 Safety devices

#### 7.6.1 Coupling capacitor or CCVT base ground terminal

A ground terminal shall be on the external surface of the coupling capacitor or CCVT base to provide the user with a convenient grounding means.

#### 7.6.2 For carrier accessories

##### 7.6.2.1 Carrier grounding switch

A carrier grounding switch, which may be used to short-circuit the carrier lead, shall be provided between the capacitor low-voltage terminal and ground. The switch shall be operable by a hook stick from ground elevation from outside of the coupling capacitor base. The switch shall have positive detents in both the open and grounded positions, and these positions shall be determinable from outside the coupling capacitor base by means of permanent markings that cannot be easily obliterated.

##### 7.6.2.2 Carrier protective device

A protective device shall be provided between the low-voltage terminal and ground to limit voltage surges that appear across the carrier lead-in conductor.

##### 7.6.2.3 Carrier lead-in terminal

A separate terminal shall be provided for the carrier lead-in connection so that the integrity of the drain coil, protective device, and grounding switch will not be violated when connecting or disconnecting the carrier lead-in.

#### 7.6.3 Electromagnetic unit potential grounding switch

A potential grounding switch shall be provided between the capacitor divider intermediate-voltage circuit and ground. The switch shall be operable by a hook stick from ground elevation from outside the CCVT



Copyright National Electrical Manufacturers Association
Provided by IHS under license with NEMA
No reproduction or networking permitted without license from IHS
Not for Resale

base. The switch shall have positive detents in both the open and grounded positions, and these positions shall be determinable from outside the CCVT base by means of permanent markings that cannot be easily obliterated.

### 7.7 High-voltage terminal

The high-voltage terminal of a coupling capacitor, or CCVT, shall have flat pads having dimensions of at least 3 inches by 3 inches (76mm x 76mm). Four 9/16-inch (14mm) diameter holes shall be drilled symmetrically on 1-3/4-inch (45mm) centers to allow connections both in line with and at right angles to the coupling capacitor or CCVT axis.

It shall be possible to make connection to either side or both sides of the terminals.

Copper terminals shall be treated to allow the use of either aluminum or copper connectors.

NOTE—Aluminum terminals are suitable for aluminum connectors. When copper connectors are used with aluminum terminals, the connectors should be treated to allow an aluminum-to-copper joint.

For additional information on connections, see NEMA Standards Publication No. CC1-1993, Section 4.12, Recommendation for Making Connections.



Copyright National Electrical Manufacturers Association
Provided by IHS under license with NEMA
No reproduction or networking permitted without license from IHS
Not for Resale

## Annex A
(Informative)
## Coupling capacitor and CCVT circuit diagrams

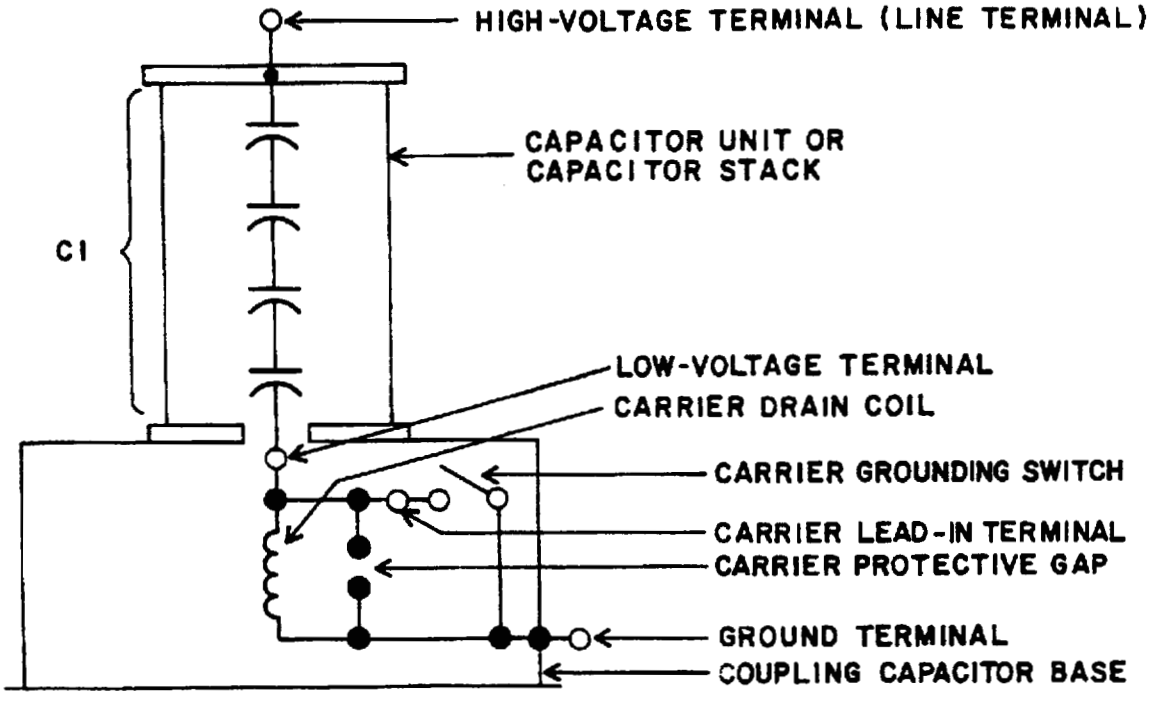


**Figure A1 – Coupling capacitor with carrier accessories**



Previous page is blank.

Copyright National Electrical Manufacturers Association
Provided by IHS under license with NEMA
No reproduction or networking permitted without license from IHS
Not for Resale

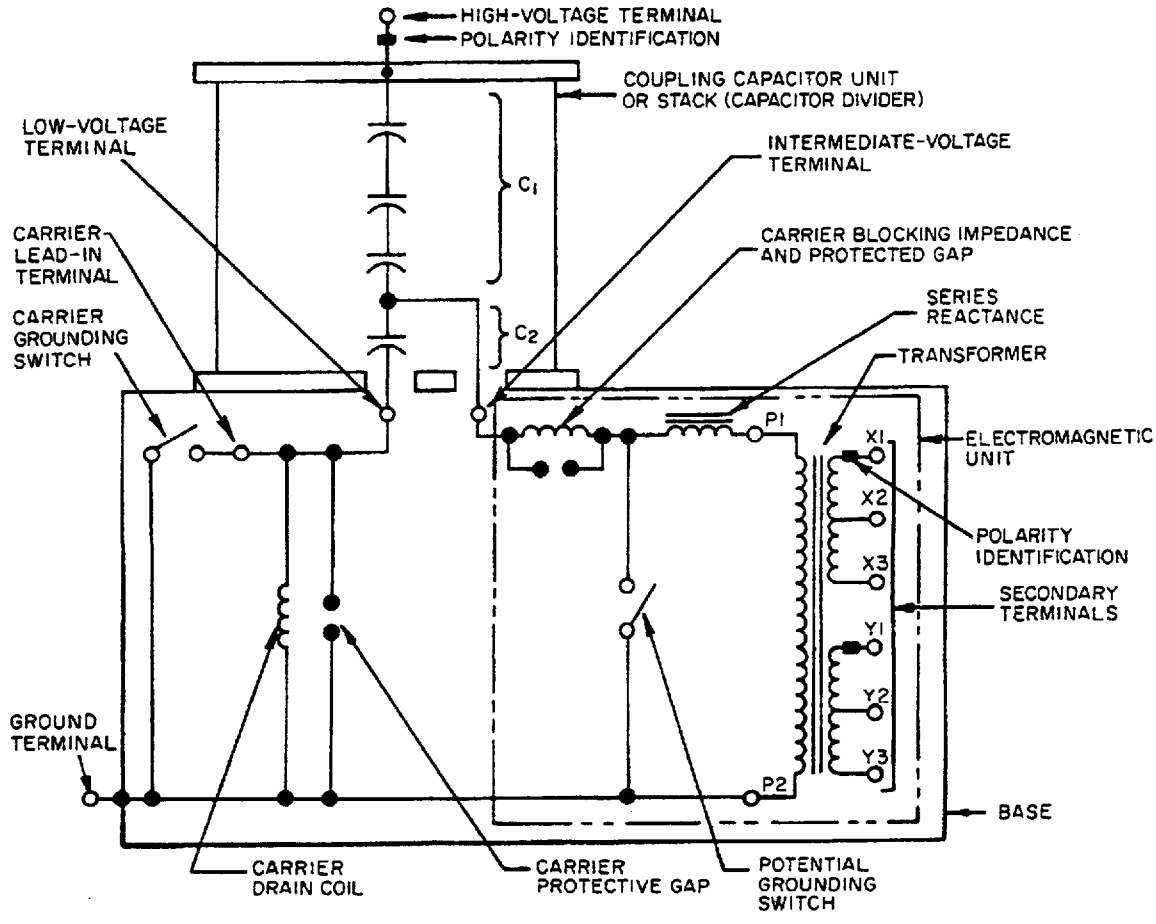


NOTE: Electromagnetic unit overvoltage protective gaps and ferroresonance suppression networks are not included in this diagram.

**Figure A2 – Typical coupling capacitor voltage transformer with carrier coupling accessories**



Copyright National Electrical Manufacturers Association
Provided by IHS under license with NEMA
No reproduction or networking permitted without license from IHS
Not for Resale

## Annex B
(Informative)
## Calculation of CCVT ratio and phase angle from known zero and rated burden data

In the method given in this appendix, the true ratio and phase angle of a CCVT are known at both zero burden and one other burden, usually a rated standard burden, for a given voltage and frequency. At the same voltage and frequency, the accuracy for any other burden and power factor that may be calculated from the equations for $RCF_c$ and $\gamma_c$ are given in this annex. The following symbols are used:

$B_o$ = zero burden for which RCF and $\gamma$ are known
$B_t$ = burden in volt-amperes for which RCF and $\gamma$ are known
$B_c$ = burden in volt-amperes for which RCF and $\gamma$ are to be calculated
$\theta_t$, $\theta_c$ = power factor angles, in degrees, of burdens $B_t$, and $B_c$, respectively

NOTE—$\theta_t$ and $\theta_c$ are positive angles for lagging power factors.

$RCF_0$, $RCF_t$, $RCF_c$ = CCVT ratio correction factors for burdens $B_o$ , $B_t$ , and $B_c$, respectively

$\gamma_0$, $\gamma_t$, $\gamma_c$ = CCVT phase angles, in minutes, for burdens $B_o$ , $B_t$ , and $B_c$, respectively

NOTE—$\gamma$ is considered positive when the secondary voltage leads the voltage applied to the high-voltage terminal.

$RCF_d = RCF_t - RCF_0$ = Difference between the CCVT ratio correction factors for burdens $B_t$, and $B_o$

$\gamma_d = \gamma_t - \gamma_0$ = difference between the CCVT phase angles for burdens

The equations are as follows:

$$RCF_c = RCF_0 + \frac{B_c}{B_t}\left[RCF_d \cos(\theta_d - \theta_c) + 0.000291\gamma_d \sin(\theta_d - \theta_c)\right]$$

$$\gamma_c = \gamma_0 + \frac{B_c}{B_t}\left[\gamma \cos(\theta_t - \theta_c) - 3438 RCF_d \sin(\theta_t - \theta_c)\right]$$

Where:

0.000291 = radians in 1 minute of angle
3438 = 1/0.000291

NOTE—These equations provide an analytical determination of CCVT accuracy. It has been shown, however, that graphical solutions of these equations by means of specially scaled polar coordinate paper and a protractor are not only as accurate as, but also faster and less tedious than the analytical solutions.

The preceding equations for $RCF_c$ and $\gamma_c$ can be reduced to the following simpler forms in the case where the burden for which the RCF and $\gamma$ are known is a unity-power-factor burden. In that case,

$$RCF_c = RCF_0 + \frac{B_c}{B_t}\left[RCF_d \cos\theta_c - 0.000291\gamma_d \sin\theta_c\right]$$

$$\gamma_c = \gamma_0 + \frac{B_c}{B_t}\left[\gamma \cos\theta_c + 3438 RCF_d \sin\theta_c\right]$$

Where:

$B_t$ = a unity-power-factor burden



Copyright National Electrical Manufacturers Association
Provided by IHS under license with NEMA
No reproduction or networking permitted without license from IHS
Not for Resale

For burdens up to the maximum burden for metering accuracy, the foregoing calculation methods will fall into the same precision classification (see 6.2.12.1) as the test methods used for obtaining the known values of ratio and phase angle.

Where these methods of calculation are used for determining performance at burdens in excess of the maximum burden for metering accuracy, such as for the thermal burden rating, a lower degree of precision will be obtained. Consideration should be given to the effects of the increased heating due to the heavier burdens.



Copyright National Electrical Manufacturers Association
Provided by IHS under license with NEMA
No reproduction or networking permitted without license from IHS

Not for Resale

## Annex C
(Informative)
## Drain coil loading in power line carrier coupling circuits

The carrier drain coil is required in all coupling capacitors (and CCVTs) with carrier accessories and is an option in line tuners for safety purposes. This device provides a low impedance path for power frequency currents and will limit the power frequency voltage measured at the carrier lead-in terminal. Refer to Figure C1. The drain coil ($L_D$) is connected to the carrier lead-in terminal of the coupling capacitor at the center of a series tuned circuit formed by the tuning inductance ($L_T$) and the coupling capacitor capacitance ($C_C$). The shunting effect of this connection should not severely alter the characteristics of the line tuner in the frequency range of the tuner. The shunting effect of the drain coil acts like stray capacitance to ground in the carrier lead-in connection, or resistive losses in the insulation. The variation of line tuner circuits frustrates attempts to attach a dB loss value to this connection. A more definitive measurement is to record the effect of the drain coil inductive loading on the return loss, or reflected power measured when adjusting the line tuner.

The drain coil inductive reactance in the carrier frequency band of the tuner should be sufficiently high to appear transparent to the line tuner. Tests with various line tuner types have shown that the inductance of the carrier drain coil in the coupling capacitor should be at least 13 times the inductance of the tuning inductor when the coupling capacitor is resonated at the tuning frequency. This ratio of drain coil inductance to tuning inductor inductance translates into a requirement for a higher drain coil inductance at the low end of the PLC frequency range (below 70 kHz). Lower values of inductance may be used for higher frequency ranges. Coupling capacitors for EHV applications used on long lines at low PLC frequencies should be considered carefully since the capacitance of the coupling capacitor decreases and the tuning inductance increases with increased voltage, therefore requiring a high drain coil inductance for these units. Higher capacitance coupling capacitors will minimize the effects of the drain coil.

This ratio of inductances will minimize the inductive loading of the drain coil. The user should also be aware that if an optional drain coil is placed in the line tuner, the parallel combination of the two drain coils should be considered when applying the coupling capacitor and carrier line tuner.



Copyright National Electrical Manufacturers Association
Provided by IHS under license with NEMA
No reproduction or networking permitted without license from IHS
Not for Resale

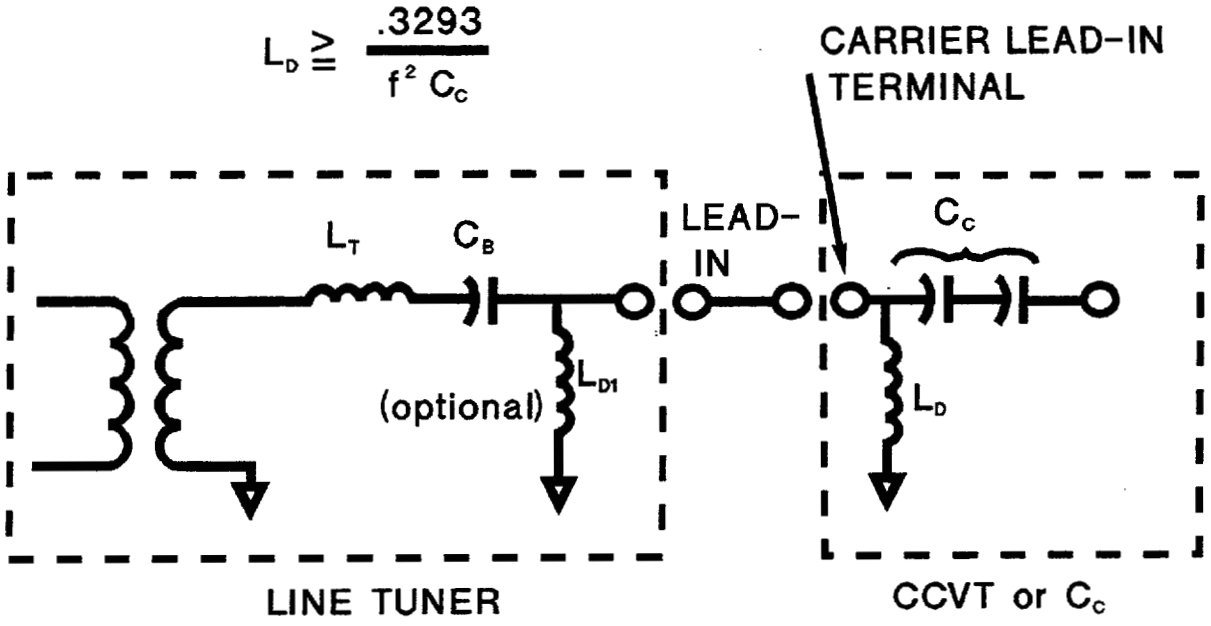


**Figure C1 – Typical line tuner coupling capacitor connection**



Copyright National Electrical Manufacturers Association
Provided by IHS under license with NEMA
No reproduction or networking permitted without license from IHS
Not for Resale