2-55-21

American National Standard

for reference ballasts for high-intensity-discharge lamps – methods of measurement (supplement to ANSI C82.6-1985)

Approved January 25, 1988

Secretariat: National Electrical Manufacturers Association

Change the heading of 6.6 to read:

6.6 Measurement of Starting Pulse Parameters

Change the first paragraph of 6.6.1 to read:

6.6.1 Measurement of the starting pulse of a ballast is difficult to duplicate unless the following practices are closely followed:

Substitute the following for item (3) of 6.6.1:

(3) A 20-picofarad capacitor shall be connected across the ballast output leads to simulate the lamp load. The capacitance of the conductors between the simulated lamp load and the ballast/starter combination shall be adjusted to equal the ballast/starter capacitive load rating specified by the ballast manufacturer. The capacitor(s) used for this test shall have good high-frequency characteristics and suitable voltage ratings.

ANSI C82.6a-1988

An American National Standard implies a consensus of those substantially concerned with its scope and provisions. An American National Standard is intended as a guide to aid the manufacturer, the consumer, and the general public. The existence of an American National Standard does not in any respect preclude anyone, whether he has approved the standard or not, from manufacturing, marketing, purchasing, or using products, processes, or procedures not conforming to the standard. American National Standards are subject to periodic review and users are cautioned to obtain the latest editions.

The American National Standards Institute does not develop standards and will in no circumstances give an interpretation of any American National Standard. Moreover, no person shall have the right or authority to issue an interpretation of an American National Standard in the name of the American National Standards Institute.

CAUTION NOTICE: This American National Standard may be revised or withdrawn at any time. The procedures of the American National Standards Institute require that action be taken to reaffirm, revise, or withdraw this standard no later than five years from the date of approval. Purchasers of American National Standards may receive current information on all standards by calling or writing the American National Standards Institute.

Copyright National Electrical Manufacturers Association
Provided by IHS under license with NEMA
No reproduction or networking permitted without license from IHS

A-42-88

American National Standard

for reference ballasts for high-intensity-discharge lamps – methods of measurement

This material is reproduced from American National Standard C82.6-1985, copyright 1985, with permission of the American National Standards Institute, Inc. Not for resale. No part of this publication may be copied or reproduced in any form, electronic retrieval system or otherwise, without the prior written permission of the American National Standards Institute, Inc., 11 West 42nd Street, New York, New York 10036.

american national standards institute, inc
1430 broadway, new york, new york 10018

Copyright National Electrical Manufacturers Association
Provided by IHS under license with NEMA
No reproduction or networking permitted without license from IHS
Not for Resale

American National Standard

Approval of an American National Standard requires verification by ANSI that the requirements for due process, consensus, and other criteria for approval have been met by the standards developer.

Consensus is established when, in the judgment of the ANSI Board of Standards Review, substantial agreement has been reached by directly and materially affected interests. Substantial agreement means much more than a simple majority, but not necessarily unanimity. Consensus requires that all views and objections be considered, and that a concerted effort be made toward their resolution.

The use of American National Standards is completely voluntary; their existence does not in any respect preclude anyone, whether he has approved the standards or not, from manufacturing, marketing, purchasing, or using products, processes, or procedures not conforming to the standards.

The American National Standards Institute does not develop standards and will in no circumstances give an interpretation of any American National Standard. Moreover, no person shall have the right or authority to issue an interpretation of an American National Standard in the name of the American National Standards Institute. Requests for interpretations should be addressed to the secretariat or sponsor whose name appears on the title page of this standard.

CAUTION NOTICE: This American National Standard may be revised or withdrawn at any time. The procedures of the American National Standards Institute require that action be taken to reaffirm, revise, or withdraw this standard no later than five years from the date of approval. Purchasers of American National Standards may receive current information on all standards by calling or writing the American National Standards Institute.

Published by

American National Standards Institute
1430 Broadway, New York, New York 10018

Copyright © 1985 by American National Standards Institute, Inc
All rights reserved.

No part of this publication may be reproduced in any form,
in an electronic retrieval system or otherwise, without
the prior written permission of the publisher.

Printed in the United States of America

A1M685/7

Copyright National Electrical Manufacturers Association
Provided by IHS under license with NEMA
No reproduction or networking permitted without license from IHS

Not for Resale

ANSI/ASC C82.6-1985
Revision of
ANSI C82.6-1980

American National Standard for Reference Ballasts for High-Intensity-Discharge Lamps – Methods of Measurement

Secretariat

National Electrical Manufacturers Association

Approved March 8, 1985

American National Standards Institute, Inc

Copyright National Electrical Manufacturers Association
Provided by IHS under license with NEMA
No reproduction or networking permitted without license from IHS

Not for Resale

Foreword (This Foreword is not part of American National Standard ANSI/ASC C82.6-1985.)

The characteristics of high-intensity-discharge-lamp ballasts are specified in terms of the performance of a reference lamp with these ballasts as compared with the performance of the same lamp with a reference ballast. Due to the nature of high-intensity-discharge lamps, instrumentation that might be satisfactory for other types of measurements may not be acceptable in this case. This standard describes the instruments and procedures that have been found necessary for reliable and reproducible results in the measurement of high-intensity-discharge-lamp ballasts.

Previous editions of this standard were approved in 1961, 1965, 1971, 1976, and 1980. The 1985 edition includes new information on instrumentation and transformer test correction.

Suggestions for improvement of this standard will be welcome. They should be sent to the Secretary of Committee C82, National Electrical Manufacturers Association, 2101 L Street, Washington, DC 20032.

This standard was processed and approved for submittal to ANSI by Accredited Standards Committee on Lamp Ballasts, C82. Committee approval of the standard does not necessarily imply that all committee members voted for its approval. At the time it approved this standard, the C82 Committee had the following members:

Sheppard Cohen, Chair
Fred P. Smith, Secretary

Organization Represented	*Name of Representative*
Advance Transformer Company	A. E. Feinberg
	E. M. Freegard
Duro-Test Corporation	Joel Shurgan
ETL Testing Laboratories, Inc.	Anthony DiNiro
	Steven Pasternak (Alt)
General Electric Company	J. P. Holloway
	T. A. Pickett
General Services Administration	J. J. Wilson
GTE Products Corporation	R. P. Bonazoli
	Sheppard Cohen (Alt)
National Electrical Manufacturers Association	R. D. Munson
	B. Gershen (Alt)
North American Philips Lighting Corporation	A. C. Rousseau
OSRAM Sales Corporation	R. D. Liddle, Jr
	Jack Hofmann (Alt)
Universal Manufacturing Corporation	M. A. Stein
Underwriters Laboratories, Inc	W. O. Marquardt

Copyright National Electrical Manufacturers Association
Provided by IHS under license with NEMA
No reproduction or networking permitted without license from IHS
Not for Resale

Subcommittee C82-2 on High-Intensity-Discharge-Lamp Ballasts, which developed this standard, had the following members:

J. A. Nuckolls, Chair
Fred P. Smith, Secretary

W. W. Alexander
W. R. Alling
Warren Anderson
E. C. Birnstein, Jr
Peter A. Bleasby
Barry F. Bolt
Sheppard Cohen
Robert E. Dougher
A. E. Feinberg
B. Gershen
J. A. Haymaker
William Hitchcock
J. A. Hofmann
J. P. Holloway
George Johnson
K. F. Kempel
R. A. Kulka
R. D. Liddle
C. W. Long
Wayne Lonseth
A. Maguire
W. O Marquardt
W. C. Matz
R. D. Munson
A. R. Naysmith
M. Owens
Steven Pasternak
T. A. Pickett
G. A. Pope
C. M. Revay
Marion Rosiak
Jerry Sadler
C. F. Scholz
Larry Sheinberg
Billy Lee Shelby
K. W. Simms
Michael F. Siska
H. S. Strauss
F. Van Steenhoven
Henry Walsh
Hans Wattenbach
C. Williams
Dale Work
T. G. Yahraus

The development of this standard is dedicated to the memory of Mr John A. Haymaker of Hi-Tek Lighting.

Copyright National Electrical Manufacturers Association
Provided by IHS under license with NEMA
No reproduction or networking permitted without license from IHS

Not for Resale

Contents

SECTION		PAGE
1.	Scope	6
2.	Related Standards	6
3.	Definitions	6
4.	General Conditions for Electrical Performance Tests	6
4.1	Power Supply	6
4.2	Ballast Conditions	6
4.3	Lamp Position	6
4.4	Lamp Stabilization	7
4.5	Instrumentation	7
5.	Reference-Ballast Circuits	8
5.1	Reference-Ballast Characteristics	8
5.2	Adjustment and Test	8
5.3	Ballast and Instrument Connections	8
5.4	Circuit and Equipment Grounding	8
6.	Ballast Measurements (Multiple-Supply-Type Ballasts)	9
6.1	Input Circuit Measurements	9
6.2	Output (Lamp) Circuit Measurements	9
6.3	Circuit Connections	9
6.4	Circuit and Equipment Grounding	9
6.5	Measurement of Starting and Sustaining Parameters of Peak Lead High-Intensity-Discharge-Lamp Ballasts	9
6.6	Measurement of Starting Pulse Parameters, High-Pressure-Sodium-Lamp Ballasts	10
6.7	Lamp Operating Limits	12
6.8	Regulation	12
6.9	Extinction Voltage Test	12
6.10	Lamp Current Crest Factor	12
6.11	Ballast Power Loss	12
6.12	Input Power Factor	13
7.	Mercury-Lamp Constant-Current Series-Supply-Type Transformer Measurements	13
7.1	Input Circuit Measurements	13
7.2	Output (Lamp) Circuit Measurements	13
7.3	Power Supply	13
7.4	Transformer and Instrument Connections	13
7.5	Lamp Operating Limits	13
7.6	Lamp Current Crest Factor	13
7.7	Ballast Power Loss	13
8.	Leakage Current Measurement	13
8.1	General	13
8.2	Characteristics Required of Measuring Circuit and Instrument	13
8.3	Conditions of Test	16
8.4	Test Equipment	16
8.5	Test Procedure	16
9.	Temperature Rise Test (Bench Test)	17
9.1	Mechanical Conditions	17
9.2	Ambient Conditions	17
9.3	Electrical Conditions	17
9.4	Methods of Temperature Determination	17
9.5	Test Procedure	17
9.6	Instrumentation	17

Copyright National Electrical Manufacturers Association
Provided by IHS under license with NEMA
No reproduction or networking permitted without license from IHS

Not for Resale

SECTION PAGE

10. Dielectric Tests 17
10.1 General 17
10.2 Applied Potential Test (Hi Pot) 17
10.3 Transient Insulation Level (TIL) Test 18

11. Revision of American National Standards Referred to in This Document 18

Figures
Fig. 1 Reference-Ballast Circuit for HID Lamps 8
Fig. 2 Multiple-Circuit Ballast Test Connections. 10
Fig. 3 Current Slope (*di/dt*) and Off Time (OT) 11
Fig. 4 Overshoot (OS) 11
Fig. 5 Sustaining Voltage Measurement Wiring Diagram 11
Fig. 6 Sustaining Voltage (V_{ss}) 11
Fig. 7 Series-Type Transformer Test Connections 14
Fig. 8 Circuit for Leakage Current Test – Built-In Ballast Tested Separately. 15
Fig. 9 Circuit for Leakage Current Test – Ballasted Luminaire or Independent Ballast 15
Fig. 10 Impulse Test Circuit for Reactor Ballasts 19
Fig. 11 Impulse Test Circuit for Autotransformer Ballasts 19
Fig. 12 Impulse Test Circuit for Autotransformer Ballasts – Lead Type 19
Fig. 13 Impulse Test Circuit for Capacitors Used for Power Factor Correction 20
Fig. 14 Impulse Test Circuit for Insulated Winding Ballasts. 20

Copyright National Electrical Manufacturers Association
Provided by IHS under license with NEMA
No reproduction or networking permitted without license from IHS
Not for Resale

American National Standard for Reference Ballasts for High-Intensity-Discharge Lamps – Methods of Measurement

1. Scope

This standard describes the procedures to be followed and the precautions to be taken in measuring the performance of ballasts for high-intensity-discharge (HID) lamps. Deviations from the procedures given in this standard are permissible for production or other testing provided that the methods used give results in substantial agreement with the methods given herein. In case of doubt, reference shall be made to the specified methods to establish the validity of the results obtained by any alternate procedure.

2. Related Standards

This standard is intended for use in conjunction with the following American National Standards (see Section 11):

ANSI C78.40-1979, Specifications for Mercury Lamps

ANSI C78.386-1983, Electric Lamps – Mercury Lamps – Methods of Measuring Characteristics

ANSI C78.387-1980, Methods of Measurement of Metal-Halide-Lamp Characteristics

ANSI C78.388-1984, Electric Lamps – High-Pressure Sodium Lamps – Methods of Measuring Characteristics

ANSI C78.1300 Series and ANSI/ASC C78.1300 Series, Specifications for Various Metal-Halide and High-Pressure Sodium Lamps

ANSI C82.4-1985, Specifications for High-Intensity-Discharge Lamp Ballasts (Multiple Supply Type)

ANSI C82.5-1983, Reference Ballasts for High-Intensity-Discharge Lamps (and its supplement, ANSI C82.5a-1984, Reference Ballasts for Low-Pressure Sodium Lamps)

ANSI C82.7-1983, Mercury Lamp Transformers – Constant-Current (Series) Supply Type

ANSI C82.9-1981, Definitions for High-Intensity-Discharge-Lamp Ballasts and Transformers

ANSI C92.1-1982, Power Systems – Insulation Coordination

ANSI/IEEE 100-1984, Dictionary of Electrical and Electronics Terms

ANSI/UL 1029-1980, High-Intensity-Discharge Lamp Ballasts

3. Definitions

Definitions of terms that apply specifically to the subject treated in this standard are given in ANSI C82.9-1981 and ANSI C92.1-1982. For additional definitions, see ANSI/IEEE 100-1984.

4. General Conditions for Electrical Performance Tests

4.1 Power Supply. Except for the testing of ballasts designed for use on constant-current supply circuits, the ac voltage supply at the input terminals to the ballast-and-lamp combination shall, throughout the full range of test requirements, have a waveshape such that the rms (root-mean-square) summation of the harmonic components will not exceed 3% of the fundamental component. The impedance of the power source, as measured at the point where the ballast-and-lamp combination is connected, shall not exceed 3% of the ballast impedance. Care should be taken to choose variable autotransformers or other voltage transformation devices that have a sufficient power rating – at least five times the lamp wattage – to ensure compliance with the above requirement.

4.2 Ballast Conditions. For normal operational tests, the ambient temperature and the temperature of the ballast under test shall be 25°C ± 5°C.

4.3 Lamp Position. The lamp position, both for the measurement in the reference-ballast circuit and for

Copyright National Electrical Manufacturers Association
Provided by IHS under license with NEMA
No reproduction or networking permitted without license from IHS
Not for Resale

the measurement of the commercial ballast being tested, shall be the same as that for which the commercial ballast is designed. Reference-ballast characteristics have been established for vertical and horizontal operation, the lamp positions most commonly used in ballast measurement work. When a lamp is operated in other than a vertical position the measurement becomes more complicated, and the method outlined in ANSI C78.386-1983, ANSI C78.387-1980, and ANSI C78.388-1984 should be followed carefully.

4.4 Lamp Stabilization. The lamps used for ballast measurements shall, unless otherwise specified, have been seasoned for 100 hours or longer prior to their use in the ballast tests.

Before any measurements are taken, the lamp shall be operated within ± 3% of rated wattage in an ambient temperature of 25°C ± 5°C until the electrical parameters of the lamp cease to change. The lamp burning time required to achieve this lamp stabilization is a minimum of 30 minutes. It could be as much as 6 hours or more for a metal-halide lamp if the lamp is moved while it is still hot or if its orientation is changed. After the stabilization process has begun, the lamp shall not be moved or repositioned until after the testing is complete. In order to avoid heating up the test ballast during lamp stabilization, causing resistance changes and therefore resulting in unrepeatable data, it is necessary to warm up the lamp on a standby ballast. This standby ballast should be a commercial ballast of a type similar to the test ballast in order to be able to switch a stabilized lamp to the test ballast without extinguishing the lamp. A fast-acting switch is recommended; however, a make-before-break switch may be required on a high-pressure-sodium lamp to prevent it from extinguishing during switchover. Once the lamp has been transferred to the test ballast circuit, restabilization time is important and is typically 1 minute for mercury and high-pressure-sodium lamps and 3 minutes for metal-halide lamps. To avoid test ballast heatup, measurements should be taken within 5 minutes after restabilization.

4.5 Instrumentation

CAUTION: Certain instruments connected in parallel with the lamp are destroyed when subjected to the starting pulse of high-pressure-sodium-lamp ballasts. It is recommended that such instruments be connected after the lamp is started and that some protective device parallel the instrument.

4.5.1 Accuracy. It is desirable that instruments, particularly of the analog type, be chosen so that the indications to be read will be in the upper third of the range. Instruments should be selected which have a guaranteed accuracy commensurate with the requirements of the test and shall not have accuracies less than the following:

Ammeters and voltmeters: ± 1/2% up to 800 hertz

Wattmeters: ± 3/4% up to 800 hertz for power factor circuits of 50% to 100%; ± 3/4% up to 125 hertz for low-power-factor (0% to 20%) circuits.

4.5.2 Impedance Limitations. It is necessary that the potential circuit impedance be high and the current impedance be low to reduce the disturbance of the circuit caused by the presence of the instruments. Instruments connected in parallel with the lamp shall not draw more than 1% of the rated lamp current. Instruments connected in series with the lamp shall have an impedance such that the voltage drop does not exceed 0.5% of rated lamp voltage. Potential circuit amplifiers having high input impedance and an accurately controlled gain may be used to measure ballast and lamp characteristics. The output of such amplifiers must faithfully reproduce the input voltage with respect to rms value (or a multiple thereof), waveshape, and phase relation. When measuring the rms and peak open-circuit voltage of a ballast, the total impedance across the ballast, including the potential measuring instruments used, shall be 5 kilohms per volt or greater. (This does not apply to the pulse height of high-pressure-sodium-lamp ballasts.)

4.5.3 Connection in the Circuit. In general, only one instrument at a time shall be connected in the ballast output (lamp) circuit. The one exception to this is the case of reference-ballast measurements, in which it is sometimes desirable to include the ammeter and wattmeter current coils as part of the measured impedance of the reference ballast. When this is done, it is necessary that these coils be left in the circuit at all times.

4.5.4 Root-Mean-Square (rms) Measurements. The voltage across a high-intensity-discharge lamp has a distorted waveshape which departs considerably from a true sine wave. The lamp current generated by ballast-lamp interaction also deviates from a true sine wave. Therefore, the instruments used in lamp circuits for rms measurements shall be of a type whose response indicates true rms values only and shall have the frequency response specified in 4.5.1.

4.5.5 Peak Measurements. Instruments used for measurement of peak voltage or peak current should be of a type whose deflection, or other indication, is dependent upon true peak values. The starting pulse of a high-pressure-sodium-lamp ballast can be considered a voltage pulse because of its sudden rise and fall. Oscilloscopes used for this measurement should have a band pass of 35 megahertz or greater. A peak-reading volt-

Copyright National Electrical Manufacturers Association
Provided by IHS under license with NEMA
No reproduction or networking permitted without license from IHS
Not for Resale

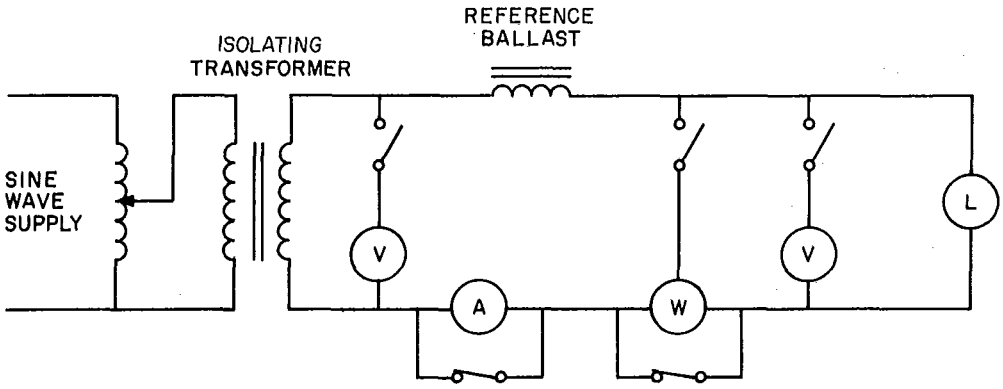

WARNING: Refer to Section 5.4 for circuit and equipment grounding procedures.

Fig. 1
Reference-Ballast Circuit for HID Lamps

meter having a band pass of 35 megahertz or greater may be used in place of the oscilloscope.

4.5.6 Current Crest Factor Measurements. Limits of current crest factor are found in the appropriate lamp standards, ANSI C78.40-1979, the ANSI C78.1300 series, or the ANSI/ASC C78.1300 series. The determination of current crest factor requires the measurement of both the peak current and the rms current. The crest factor is then calculated as the ratio of the peak to the rms value. Typical methods of taking the necessary measurements are as follows:

(1) Peak-reading voltmeter across current shunt and rms ammeter.

(2) Oscilloscope reading across current shunt and rms ammeter.

The above methods are described in some detail in ANSI C78.386-1983.

5. Reference-Ballast Circuits

5.1 Reference-Ballast Characteristics. The general characteristics of reference ballasts are described in ANSI C82.5-1983. The specific values of impedance, reference current, and rated input voltage for the reference ballast corresponding to each type and size of high-intensity-discharge lamp are given in the respective lamp standards, ANSI C78.40-1979, the ANSI C78.1300 series, or the ANSI/ASC C78.1300 series.

5.2 Adjustment and Test. The adjustment and test of the reference ballast should be performed in accordance with the procedure described in ANSI C82.5-1983. As is pointed out in ANSI C82.5-1983, the reference ballast may be set up either with or without the impedance of the wattmeter current coil and ammeter included in the measured ballast characteristics. Either procedure is fully satisfactory, but it is important that instrument correction be determined for the particular method being used. If the ammeter and wattmeter current coils are included in the ballast impedance, these instrument coils must be left in the circuit at all times.

5.3 Ballast and Instrument Connections. When a reference ballast is used for the operation of a lamp, the ballast and the instruments should be connected as shown in Fig. 1.

5.4 Circuit and Equipment Grounding

5.4.1 In order to minimize the possibility of shock hazard, it is essential that careful attention be paid to the proper grounding of the electrical circuit and also of certain instruments that may be used. It is especially important to make sure that oscilloscopes or other electronic instruments having exposed metal cases or terminals always have the *exposed metal parts connected to ground.*

5.4.2 In the circuit given in Fig. 1 the power supply is shown as a two-wire system connected to the test circuit through an isolation transformer. The power supply used may or may not have one of the phase conductors at ground potential; either type of supply can be used satisfactorily, since the isolating transformer separates the measurement circuit from the power source. The instrument side of the measurement circuit may be grounded, or if all instrument terminals are adequately insulated, it may be left "floating" (that is, neither side connected to ground).

5.4.3 Oscilloscopes and peak-reading voltmeters

Copyright National Electrical Manufacturers Association
Provided by IHS under license with NEMA
No reproduction or networking permitted without license from IHS
Not for Resale

usually have to have one of the input terminals at ground potential. The use of the isolating transformer described in 5.4.2 allows one to connect any part of the test circuit to ground.

5.4.4 To eliminate the possibility of ground loops it is essential that a *single* ground connection be used to ground the exposed metal case of the instrument, the instrument input terminal ground, and the measurement circuit.

5.4.5 Wherever the circuit permits, the screw shell of the lamp holder shall be connected to the grounded side of the measurement circuit.

6. Ballast Measurements (Multiple-Supply-Type Ballasts)

6.1 Input Circuit Measurements

6.1.1 Starting Conditions. The following measurements are pertinent:

(1) rms voltage
(2) rms current

6.1.2 Operating Conditions. The following measurements are pertinent:

(1) rms voltage
(2) rms current
(3) Power

6.2 Output (Lamp) Circuit Measurements

6.2.1 Starting Conditions. The following measurements are pertinent:

(1) rms open-circuit voltage
(2) Peak open-circuit voltage
(3) Starting and sustaining parameters for metal-halide and mercury lamps
(4) Starting parameters for high-pressure-sodium lamps
(5) Lamp current crest factor for metal-halide and high-pressure-sodium lamps
(6) Current off time for metal-halide and high-pressure-sodium lamps
(7) Current slope (through zero) for metal-halide lamps

6.2.2 Operating Conditions. The following measurements are pertinent:

(1) rms lamp voltage
(2) rms lamp current
(3) Lamp current crest factor
(4) Lamp power

6.3 Circuit Connections. For the measurement of the ballast operating characteristics, the ballast and electrical instruments are connected as shown in Fig. 2. This diagram also includes the additional reference-ballast circuit from which the lamp is transferred to the test ballast circuit. It is necessary that the transfer switch be fast acting so that the lamp will be transferred from the reference-ballast circuit (or standby ballast circuit in the case of high-pressure-sodium lamps) without being extinguished. If the transfer switch is a make-before-break switch, it is essential to maintain the same polarity in the two ballast circuits that are being connected together.

6.3.1 Mercury Lamps. Mercury lamps can be transferred from the reference ballast to the test ballast as mentioned in the preceding paragraph.

6.3.2 Metal-Halide Lamps. Metal-halide lamps also can be transferred from a reference ballast to a test ballast, but the transfer switch should be a "make-before-break" switch.

6.3.3 High-Pressure-Sodium Lamps. High-pressure-sodium lamps are very difficult to transfer from a reference ballast to any other kind. A more convenient procedure is to take the readings on a reference ballast first, turn the lamp off, and then restart it in a circuit employing a standby ballast of the same type as the ballast being tested. The lamp can then be transferred from the standby ballast to the test ballast without extinguishing. A make-before-break transfer switch should be used.

6.4 Circuit and Equipment Grounding. See 5.4.

6.5 Measurement of Starting and Sustaining Parameters of Peak Lead High-Intensity-Discharge-Lamp Ballasts

6.5.1 Equipment Required

(1) "Stiff" line – A stiff line is defined as a sine wave source that exhibits voltage regulation (change of rms voltage from no load to full load divided by rms voltage at full load) of no more than 0.5%.

(2) Oscilloscope with camera.

(3) One 1.0-ohm ± 2% resistor and one 5.0-ohm ± 2% low-temperature-coefficient resistor capable of carrying appropriate ballast short-circuit current.

6.5.2 Current Slope and "Off-Time" Measurements. Connect a 5.0-ohm ± 2% resistive dummy load across the ballast output. Take a picture of the waveshape appearing on the oscilloscope connected across the resistor with the test ballast operating at 90% line voltage. The oscilloscope should be in the dc input mode, and the sensitivity should be such that the scope trace through zero approaches a straight line. This may require clipping of the signal in order to boost vertical gain. The slope of the current as it goes through zero is the ratio of a Δ current to a Δ time taken at the time the current passes through zero at the end of a half cycle. See Fig. 3. "Off-time" is that period of time of low current level at the end of the current half cycle prior to transition to the next half cycle. This period

Copyright National Electrical Manufacturers Association
Provided by IHS under license with NEMA
No reproduction or networking permitted without license from IHS
Not for Resale

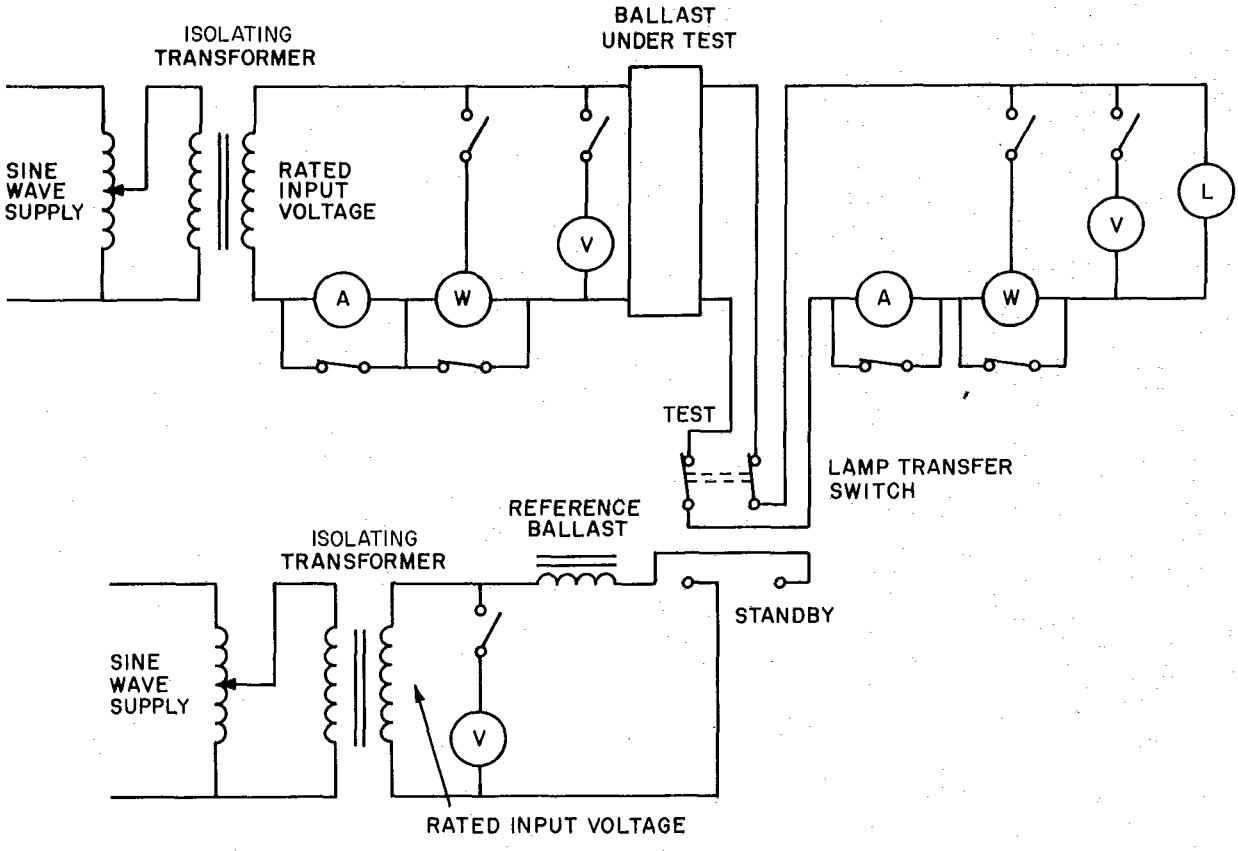

WARNING: Refer to Section 5.4 for circuit and equipment grounding procedures.

Fig. 2
Multiple-Circuit Ballast Test Connections

is defined as the interval from the point of intersection of the tangent to the descending current trace and the tangent to the low current trace to the end of the half cycle. See Fig. 3. The acceptable limits are specified in the appropriate lamp standards in the ANSI C78.1300 series or the ANSI/ASC C78.1300 series.

6.5.3 Current Overshoot Measurement. Connect a 1.0-ohm ± 2% resistive dummy load across the test ballast output with 110% line voltage input. Observe the waveshape appearing on the oscilloscope connected across the resistor. Measure the current overshoot. The current overshoot is that portion of the current waveform that extends across the zero axis before the end of the half cycle. Take the average of the overshoot of both half cycles. See Fig. 4. The acceptable limits are specified in the appropriate lamp standards in the ANSI C78.1300 series or the ANSI/ASC C78.1300 series.

6.5.4 Sustaining Voltage Measurements. Sustaining voltage measurements can be taken with a 5.0-ohm ± 2% resistor to simulate the lamp load. This permits repeatable measurements to be made, since lamp variability is removed.

A typical procedure is to use an oscilloscope having dual trace capability with a differential amplifier and a single-ended input amplifier with the vertical mode de-coupled. Connections to the ballast are made as shown in the wiring diagram, Fig. 5. The time base is synchronized to the ac line and no adjustments should be made between measurements. The phase relations between the open-circuit voltage, capacitor voltage, and current waveform must be maintained. (Using the chopped synchronized position quite often facilitates synchronization.) A picture is taken of the open-circuit voltage waveform. The 5-ohm resistor is placed on the secondary, and the capacitor voltage and current waveform (resistor voltage) are photographed. Sustaining voltage is measured at the point where the current waveform goes through zero. See Fig. 6.

6.6 Measurement of Starting Pulse Parameters, High-Pressure-Sodium-Lamp Ballasts

6.6.1 Measurement of the starting pulse of high-pressure-sodium-lamp ballasts is difficult to duplicate unless the following practices are closely followed:

(1) An oscilloscope is necessary to measure pulse parameters, with special care taken when an isolating transformer is used between line and ballast. See 5.4.

(2) A 0.5-microfarad capacitor of extended foil construction having good high-frequency characteristics and suitable voltage rating should be connected across

Copyright National Electrical Manufacturers Association
Provided by IHS under license with NEMA
No reproduction or networking permitted without license from IHS
Not for Resale

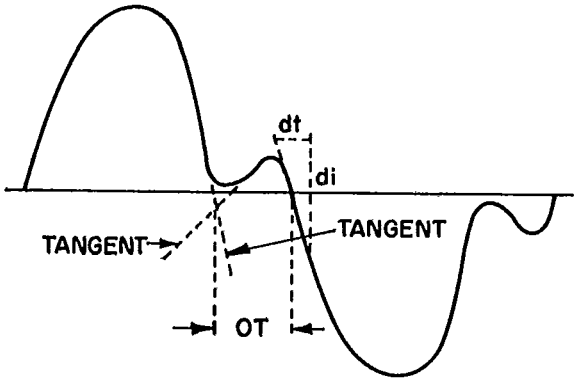

Fig. 3
Current Slope (*di*/*dt*) and Off Time (OT)

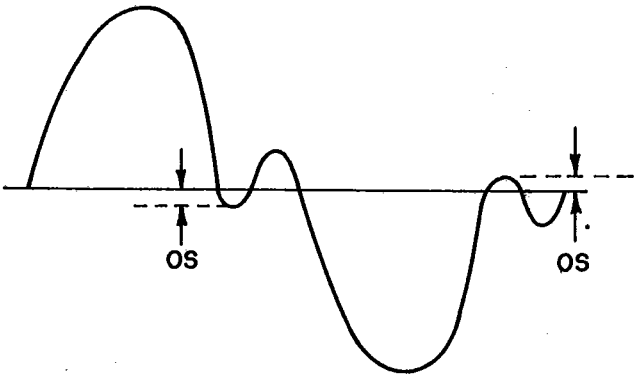

Fig. 4
Overshoot (OS)

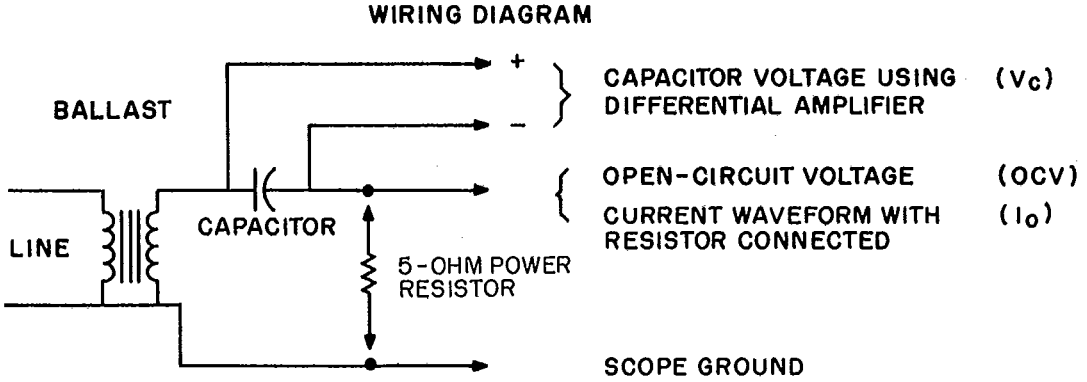

Fig. 5
Sustaining Voltage Measurement Wiring Diagram

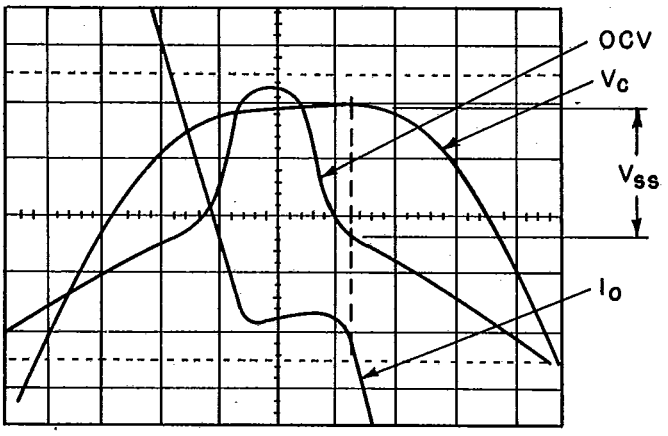

Fig. 6
Sustaining Voltage (V_{ss})

Copyright National Electrical Manufacturers Association
Provided by IHS under license with NEMA
No reproduction or networking permitted without license from IHS

Not for Resale

the output of the main power isolation transformer to bypass high frequencies.

(3) A 20-picofarad capacitor having good high-frequency characteristics and suitable voltage rating should be connected across the ballast output to simulate the lamp load.

(4) The core, power capacitors, starter, and enclosure (if used) should be grounded.

(5) The vertical scale of the oscilloscope should be calibrated before measurements are taken.

(6) When using a 1000:1 probe, the square wave response should be adjusted at the horizontal sweep speed used during the test (0.5 or 1 μsec/cm).

(7) It will probably be necessary to darken the room to get a better view of the high-voltage pulse when measuring the pulse width.

6.6.2 Pulse height, width, repetition rate, and position are specified in the appropriate lamp standards in the ANSI C78.1300 series and the ANSI/ASC C78.1300 series.

6.7 Lamp Operating Limits. A lamp of the appropriate type is first placed in the reference-ballast circuit and, with rated voltage applied to the ballast circuit, the lamp voltage, current, and wattage are read. The values obtained shall fall within the range permitted for a reference lamp in the appropriate lamp standards in ANSI C78.40-1979, the ANSI C78.1300 series, or the ANSI/ASC C78.1300 series; and ANSI C82.9-1981.

In the case of mercury and metal-halide lamps, the lamp is next transferred to the test ballast circuit without letting the lamp extinguish. High-pressure-sodium lamps usually have to be turned off, transferred to a standby ballast circuit, and then restarted. After further warm-up they can be transferred to the test ballast circuit without extinguishing.

6.8 Regulation

6.8.1 To determine regulation, readings of lamp wattage are taken at one value of line voltage above rated voltage and one value of line voltage below rated voltage as specified in the requirements given in ANSI C82.4-1978.

6.8.2 For mercury and metal-halide lamp regulation measurements, use a stabilized reference lamp as defined in ANSI C82.9-1981. These lamps are voltage stable and require only that the normal testing procedures herein described be followed for repeatable and accurate results.

6.8.3 High-pressure-sodium lamps are not voltage stable; thus, the lamp influences the regulation measurements. To include the effect of lamp voltage rise, a low-voltage lamp can be used and a voltage increase forced by placing an aluminum foil sleeve down over the high-pressure-sodium lamp or by directing a variac controlled infrared (IR) lamp on the arc tube end. A lamp operating volt-watt trace shall be recorded for both low- and high-supply voltage settings, using the sleeve or IR method to cause the trace to be generated until the lamp drops out. The low and high wattage traces shall not fall outside of the lamp trapezoid as specified in the appropriate lamp standards in the ANSI C78.1300 series and the ANSI/ASC C78.1300 series.

6.9 Extinction Voltage Test

6.9.1 Preferred Method. The extinction voltage is one measure of the ability of a ballast to operate a lamp in a stable manner. The extinction voltage of a ballast can be measured as follows:

(1) Connect the ballast under test to a reference lamp mounted in the desired position, with a voltmeter connected to measure the supply voltage.

(2) Apply rated voltage to the ballast and allow the lamp to warm up for at least 15 minutes.

(3) Reduce the supply voltage to the ballast at a continuous rate of 2%–3% per second until the lamp extinguishes. The supply voltage at that point is the extinction voltage.

6.9.2 Alternate Method (No Reference Lamp Available). The alternate method of measuring the extinction voltage of a ballast is as follows:

(1) Use a sampling of at least five, preferably ten, lamps.

(2) Determine the operating voltage of each lamp when operated from the appropriate reference ballast.

(3) For each lamp apply rated voltage to the ballast and allow the lamp to warm up for at least 15 minutes.

(4) Reduce the supply voltage to the ballast at a continuous rate of 2%–3% per second until the lamp extinguishes.

(5) Plot the extinction voltage (4) versus the lamp operating voltage (2). The nominal extinction voltage will be the value at which the line thus plotted crosses the center rated voltage for the lamp type being tested.

6.10 Lamp Current Crest Factor. See 4.5.6.

6.11 Ballast Power Loss. The power loss may be determined by the wattmeter difference method, in which the output power is subtracted from the input power. If the instruments are connected as shown in Fig. 2, either the voltmeter should be disconnected when the reading of input wattage is taken or a correction should be made to compensate for the power consumed by the voltmeter. It should also be noted that with the connections shown in Fig. 2 the wattmeter reading will include the power consumed by the wattmeter potential coil. This power in the potential coil, therefore, must be calculated and subtracted to obtain the actual input power. To minimize deviations in power loss calculations, it is recommended that where feasible the same wattmeter and the same potential and current ranges be used to measure both input and lamp watts.

Copyright National Electrical Manufacturers Association
Provided by IHS under license with NEMA
No reproduction or networking permitted without license from IHS
Not for Resale

Note that in determining ballast losses it must be kept in mind that, when one inaccurate number is subtracted from a nearly equal number, the percent error of difference may be very great. The deviation in watts loss figures may be as high as ± 10%-15% when wattmeters with a stated accuracy of ± 0.5% are employed.

6.12 Input Power Factor. The power factor is determined by dividing input watts by input volt-amperes. In the case of high-power-factor ballasts, the input power factor may be very close to unity. Unless the voltmeter, ammeter, and wattmeter readings are very accurate and the power supply sinusoidal, the calculated power factor may show values in excess of unity.

7. Mercury-Lamp Constant-Current Series-Supply-Type Transformer Measurements

7.1 Input Circuit Measurements

7.1.1 Starting Conditions. With the secondary open-circuited, the following measurements are pertinent:

(1) rms voltage
(2) rms current

7.1.2 Operating Conditions. The following measurements are pertinent:

(1) rms voltage
(2) rms current
(3) Power

7.2 Output (Lamp) Circuit Measurements

7.2.1 Starting Conditions. The following measurements are pertinent:

(1) rms open-circuit voltage
(2) Peak open-circuit voltage
(3) Lamp starting current

CAUTION: Output voltage peaks as high as 2150 volts may occur across the ballast output terminals during lamp starting.

7.2.2 Operating Conditions. The following measurements are pertinent:

(1) rms voltage
(2) rms current
(3) Power

7.3 Power Supply. The power source shall be a constant-current transformer of the moving-coil type (rated 10 kilowatts or more), adjusted to provide rated primary current to the transformer under test. The current waveshape of the constant-current supply shall be such that the rms summation of the harmonic components will not exceed 3% of the fundamental component.

7.4 Transformer and Instrument Connections. For the measurement of the transformer operating characteristics, the transformer and the electrical instruments are connected as shown in Fig. 7. The transfer switch must be of a fast-acting, make-before-break type so that the lamp is transferred from the reference-ballast circuit to the transformer test circuit without extinguishing. See 5.4.

7.5 Lamp Operating Limits. A lamp of the appropriate type is first placed in the reference-ballast circuit and then, with rated current applied to the series ballast circuit, the lamp voltage, current, and wattage are read. The values obtained must fall within the range permitted for a reference lamp. (See the appropriate lamp standards, ANSI C78.40-1979, the ANSI C78.1300 series, or the ANSI/ASC C78.1300 series; and ANSI C82.9-1981.)

7.6 Lamp Current Crest Factor. See 4.5.6.

7.7 Ballast Power Loss. The power loss may be determined by the wattmeter difference method (see 6.11).

8. Leakage Current Measurement

8.1 General. The purpose of this test is to provide a measurement of leakage current of high-intensity-discharge-lamp ballasts and associated circuitry, normally rated for use on distribution circuits of 600 volts or less. Leakage current refers to all currents, including resistive and capacitive currents, that may flow from accessible parts of a ballast to an earth ground.

8.2 Characteristics Required of Measuring Circuit and Instrument

8.2.1 Measuring Circuit

8.2.1.1 Types. The measuring circuit for leakage current shall be as shown in Fig. 8 or Fig. 9, whichever is appropriate.

8.2.1.2 Circuit Grounding. A circuit ground is necessary on the neutral conductor to obtain reliable and repeatable results; without the ground, leakage current readings can be greatly affected by the proximity of personnel or other large objects in the vicinity of the test equipment. A good earth ground should be used, such as a water or gas pipe or the grounded neutral of a power line.

8.2.2 Measuring Instrument

8.2.2.1 The requirements of the measuring instrument are defined under 8.2.2.2. The instrument that is used for the measurement of leakage current should be of the type that measures accurately fractions of a milliampere to 10 milliamperes.

8.2.2.2 Instrument Requirements

8.2.2.2.1 Indicational Response to Waveform. The measuring instrument shall indicate 1.11 times the

Copyright National Electrical Manufacturers Association
Provided by IHS under license with NEMA
No reproduction or networking permitted without license from IHS

Not for Resale

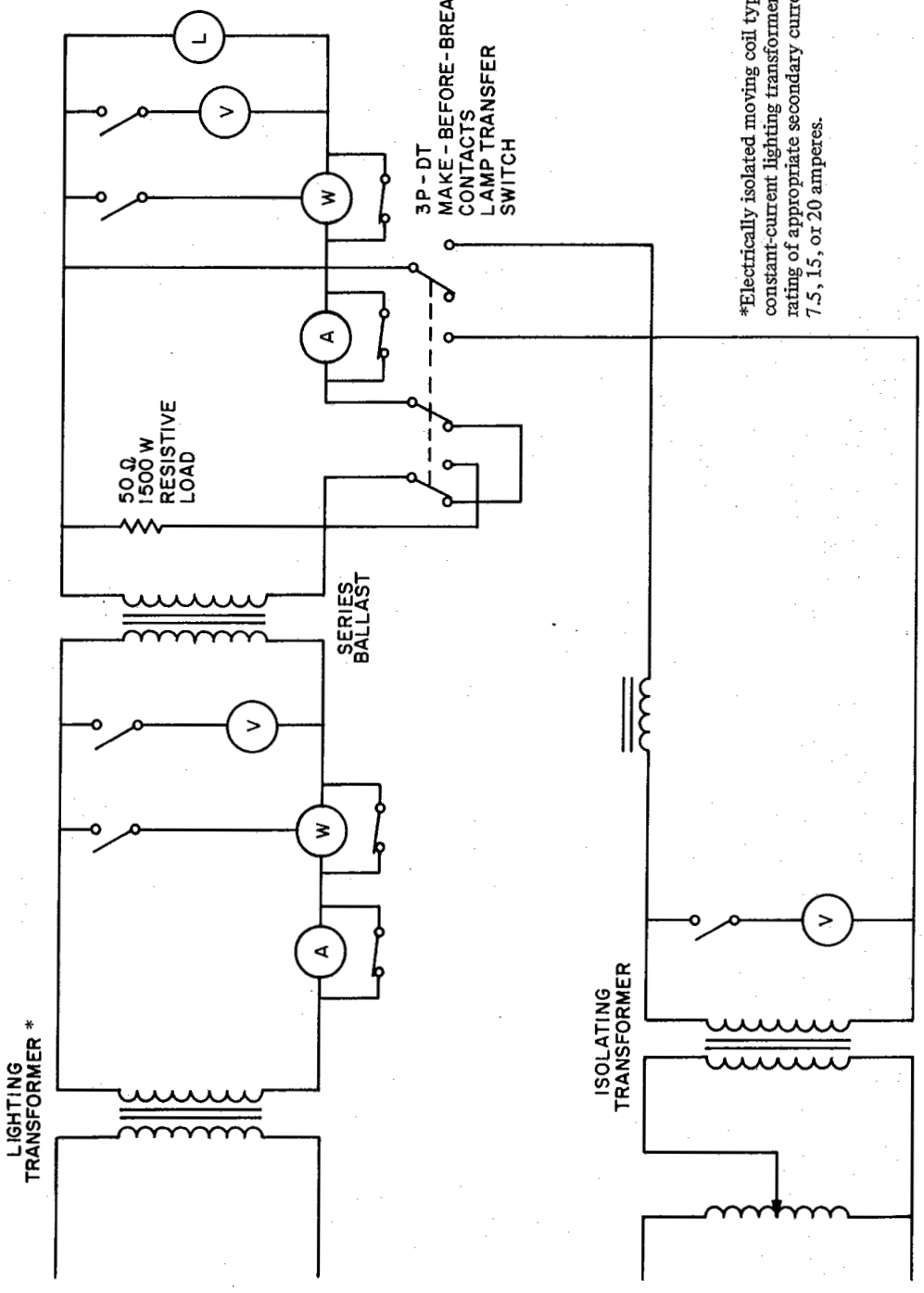

WARNING: Refer to Section 5.4 for circuit and equipment grounding procedures.

Fig. 7
Series-Type Transformer Test Connections

Copyright National Electrical Manufacturers Association
Provided by IHS under license with NEMA
No reproduction or networking permitted without license from IHS

Not for Resale

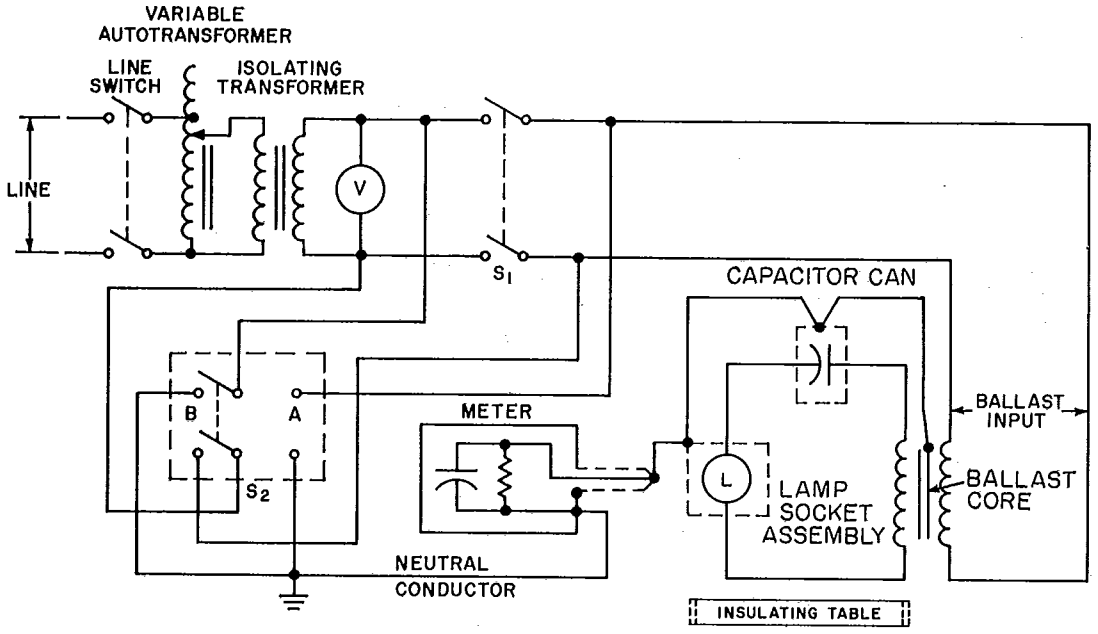

Fig. 8
Circuit for Leakage Current Test – Built-In Ballast Tested Separately

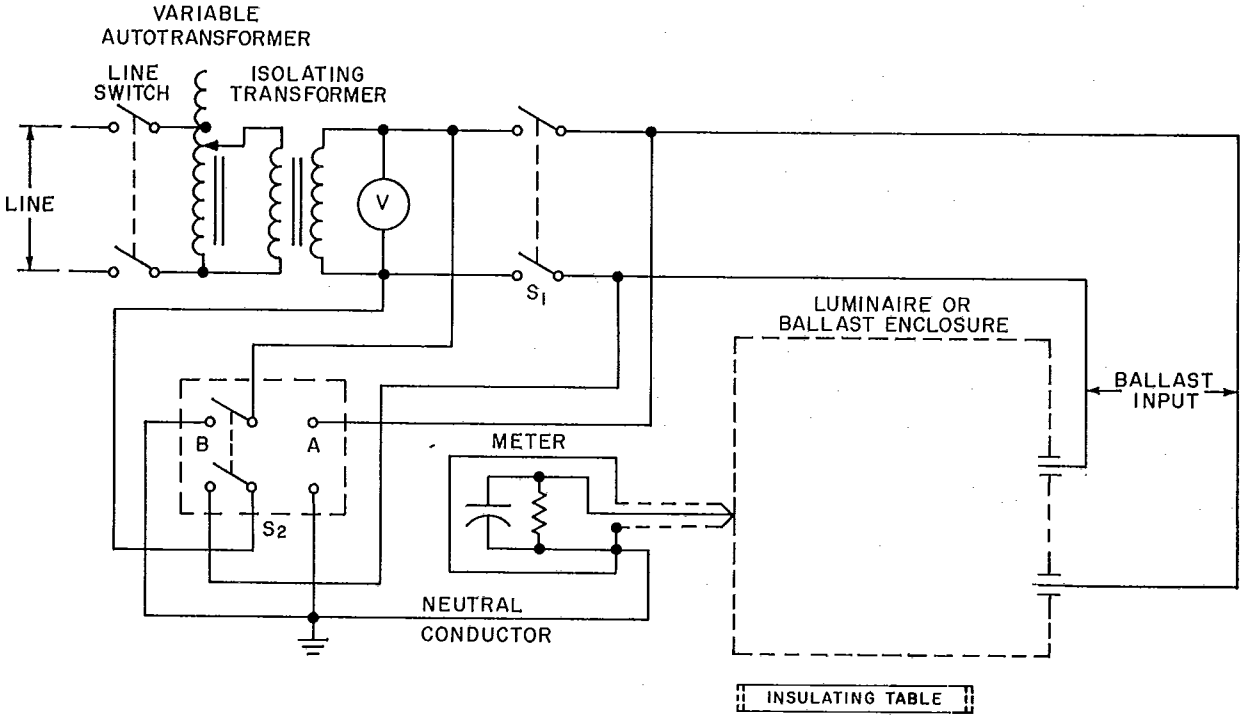

Fig. 9
Circuit for Leakage Current Test – Ballasted Luminaire or Independent Ballast

Copyright National Electrical Manufacturers Association
Provided by IHS under license with NEMA
No reproduction or networking permitted without license from IHS
Not for Resale

average of the full-wave rectified composite waveform of voltage across the resistor or current through the resistor.

8.2.2.2.2 **Input Impedance.** The measuring instrument shall have an input impedance consisting of a 1500-ohm noninductive resistor shunted by a 0.15-microfarad capacitor having good high-frequency characteristics.

8.2.2.2.3 **Frequency Response.** Over a frequency range of 0–100 kilohertz the measuring instrument shall have a frequency response (ratio of indicated to actual value of current) that is equal to the ratio of the impedance of a 1500-ohm resistor shunted by a 0.15-microfarad capacitor to 1500 ohms.

NOTE 1: The frequency response of the meter as defined in 8.2.2.2.3 approximates the experimentally determined 50th-percentile threshold-of-perception curve for hand holding a small wire normalized to 0.5 milliampere at 60 cycles.[1]

NOTE 2: Any measuring instrument used for these measurements shall have an error of not more than 5% at indications of 0.75 milliampere at any frequencies that are being measured within the range of 0–100 kilohertz. Under some circumstances where higher-frequency components are present, it may be necessary to shield the measuring instrument and its leads to maintain this accuracy.

NOTE 3: At least one instrument is available commercially that purports to meet the requirements specified under 8.2.2.2.

8.3 Conditions of Test

8.3.1 Tests are to be made at normal room ambient temperature, 25°C ± 5°C, using the test circuit of Fig. 8 or Fig. 9.

8.3.2 A built-in ballast may be tested as a separate unit or mounted within a luminaire as it would be normally. If tested as a separate unit, all metallic parts, including capacitors, that would normally be in contact with the luminaire enclosure shall be tied together electrically to form a common potential point to which the test probe will be applied (see Fig. 8). If the ballast is to be tested mounted in a luminaire, the luminaire enclosure will serve as the common potential point for the test probe (see Fig. 9). If the luminaire enclosure is made of nonmetallic material, use a metal foil with an area of 10 X 20 centimeters in contact with the enclosure surface as an electrode for the test probe.

8.3.3 An independent ballast with a metal enclosure may be tested as shown in Fig. 9. An independent ballast with a nonmetallic enclosure shall be tested by using a metal foil with an area of 10 X 20 centimeters in contact with the enclosure surface as an electrode for the test probe.

8.3.4 A high-intensity-discharge lamp of appropriate wattage should be connected to the ballast output for all tests. The lamp socket should be of a type approved for use in luminaires and mounted by normal means, and the support, if metallic, should be connected electrically to the other non-current-carrying metallic parts of the circuit.

8.3.5 Each ballast shall be tested under the following conditions:

(1) Ballast in ambient temperature of 25°C ± 5°C, with one side of ballast input open (see 8.5.3)

(2) Ballast in ambient temperature of 25°C ± 5°C, with ballast energized and lamp starting (see 8.5.4)

(3) After ballast reaches thermal equilibrium, with ballast energized and lamp operating (see 8.5.5)

(4) After ballast reaches thermal equilibrium, with one side of ballast input open and lamp in hot restart condition (see 8.5.6)

(5) After ballast reaches thermal equilibrium, with ballast energized and lamp in hot restart condition (see 8.5.7)

8.4 Test Equipment

8.4.1 The leakage current test circuit shown in Fig. 8 or Fig. 9, whichever is appropriate, shall be used. The double-pole double-throw transfer switch, S_2, shall have a neutral "off" position to facilitate the testing.

8.4.2 An instrument as described in 8.2.2 shall be used.

8.5 Test Procedure

8.5.1 Connect all simultaneously accessible exposed conductive surfaces of the ballast together (if not mounted in luminaire) and connect through the meter to a neutral conductor as shown in Fig. 8 and Fig. 9.

8.5.2 With switch S_1 in the "off" position, close the line switch and adjust the input voltage to rated ballast input voltage.

8.5.3 With switch S_1 in the "off" position and switch S_2 in the "neutral" position:

(1) Transfer switch S_2 to the "A" position and record the leakage current reading.

(2) Transfer switch S_2 to the "B" position and record the leakage current reading.

8.5.4 With switch S_1 in the "on" position and switch S_2 in the "neutral" position:

(1) Transfer switch S_2 to the "A" position and record the leakage current reading within 5 seconds after power is applied.

(2) Transfer switch S_2 to the "B" position and record the leakage current reading within 5 seconds after transfer.

8.5.5 With switch S_1 in the "on" position and switch S_2 in the "neutral " position, operate the ballast and

[1] Dalziel, C. F. Effects of electric shock on man. *IRE Transactions on Medical Electronics,* PGM-5, July 1956, fig. 7.

Dalziel, C. F., and Mansfield, T. H. Effect of frequency on perception currents. *AIEE Transactions,* part II, vol 69, 1950, fig. 4.

Copyright National Electrical Manufacturers Association
Provided by IHS under license with NEMA
No reproduction or networking permitted without license from IHS
Not for Resale

lamp until ballast thermal stabilization is reached. Then:

(1) Transfer switch S_2 to the "A" position and record the leakage current reading.

(2) Transfer switch S_2 to the "B" position and record the leakage current reading.

(3) Transfer switch S_2 to the "neutral" position.

8.5.6 Place switch S_1 in the "off" position. Then:

(1) Transfer switch S_2 to the "A" position and record the leakage current reading.

(2) Transfer switch S_2 to the "B" position and record the leakage current reading.

(3) Transfer switch S_2 to the "neutral" position.

8.5.7 Place switch S_1 in the "on" position. Before lamp restarts:

(1) Transfer switch S_2 to the "A" position and record the leakage current reading.

(2) Transfer switch S_2 to the "B" position and record the leakage current reading.

9. Temperature Rise Test (Bench Test)

9.1 Mechanical Conditions. The test ballast should be placed on a bench and supported by two wooden blocks (providing core edge support only) not less than 2 inches high and positioned for best convection coil cooling.

NOTE: A ballast intended to be enclosed in a ballast housing or as an integral part of a fixture is to be tested in its normal operating enclosure and position.

9.2 Ambient Conditions. The external ambient temperature of the complete device under test shall be 25°C ± 5°C unless the nameplate indicates a higher ambient.

9.3 Electrical Conditions. The ballast under test shall operate a nominal lamp at rated voltage and frequency.

9.4 Methods of Temperature Determination. The winding temperature shall be measured by the change-of-resistance method when applicable. The capacitor temperature shall be measured by the thermocouple method if used in an enclosed ballast. The thermal stability of the unit under test shall be indicated by the thermocouple method.

9.4.1 Thermocouple Method. Temperatures shall be determined by applying thermocouples to the hottest accessible part of the apparatus. The temperature shall be considered constant when three successive readings of these thermocouples taken at minimum intervals of 10 minutes indicate no change.

9.4.2 Change-of-Resistance Method. Temperatures shall be determined by comparing the resistance of a winding at the temperature to be determined with the resistance at a known temperature.

9.5 Test Procedure. The unit shall be mounted as indicated in 9.1. The test shall be made in a draft-free room whose ambient temperature is as indicated in 9.2. The ballast resistance shall be measured first while it is at room temperature. The ballast shall be operated at nominal voltage and frequency driving a nominal lamp until the ballast temperature becomes constant as defined in 9.4.1. It is generally necessary to de-energize the winding before measuring the resistance R. The value of R at shutdown may be determined by taking several resistance measurements at short intervals, beginning as quickly as possible after the instant of shutdown. A curve plotted between the resistance values and time may then be extrapolated to give a value of R at shutdown.

The temperature of a copper or aluminum winding is determined by the resistance method by comparing the resistance of the winding at the stabilized temperature to be determined with the resistance at a known temperature (room temperature) according to the following formula:

$$\Delta T = \frac{R}{r}(k + T_1) - (k + T_2)$$

in which ΔT is the temperature rise, R is the resistance of the coil at the end of the test, r is the resistance of the coil at the beginning of the test, T_1 is the room temperature (°C) at the beginning of the test, and T_2 is the room temperature (°C) at the end of the test. The constant k is 234.5 for electrical-grade copper and 225.0 for electrical-conductor-grade aluminum.

9.6 Instrumentation. The thermocouples shall be of the iron-constantan type, and the reading indicator shall have an accuracy of ± 1.0°C.

The instrument used for measuring resistance shall have an accuracy of ± 1.0% or better, provided the same range of the instrument is used for both hot and cold resistance readings. Otherwise an instrument of ± 0.1% accuracy is required.

10. Dielectric Tests

10.1 General. Dielectric tests, as required, shall be performed while the ballast is hot from the thermal performance tests.

10.2 Applied Potential Test (Hi Pot). The test potential shall be supplied from a suitable testing transformer having a capacity of 500 volt-amperes (or more) and an output voltage which is essentially sinusoidal and

Copyright National Electrical Manufacturers Association
Provided by IHS under license with NEMA
No reproduction or networking permitted without license from IHS

Not for Resale

can be varied. The applied potential shall be increased gradually from zero until the required test level is reached and shall be held at that level for 1 minute. The increase in the applied potential shall be at a substantially uniform rate and as rapid as is consistent with its value being correctly indicated by a voltmeter.

The applied potential test shall stress the dielectric strength between all individual coils and between each coil and transformer core.

10.3 Transient Insulation Level (TIL) Test. The output of an impulse generator (IG), providing a standard full impulse voltage wave as defined in ANSI C92.1-1982, shall be impressed on the ballast under test as indicated in 10.3.1 through 10.3.7 and in Figs. 10 through 14, as applicable. The polarity of the standard full impulse voltage wave may be either positive or negative.

10.3.1 Reactor Ballasts – Normal Power Factor. Test between the input terminal of the ballast and the lamp terminal with the lamp terminal and core grounded, as indicated in Fig. 10.

NOTE: Unless one terminal or one lead of the reactor ballast is labeled "line," the test should also be made with the two connections from the reactor reversed.

10.3.2 Reactor Ballasts – High Power Factor. Test the ballast in the manner described in 10.3.1, except with the capacitor(s) disconnected. Test capacitor(s) separately, as indicated in 10.3.6.

10.3.3 Autotransformer Ballasts – Normal Power Factor. The following shall apply:

(1) Test the lowest potential input terminal and common terminal with common terminal and core grounded, as indicated in Fig. 11(a).

(2) Same as (1) except with grounded lead from the impulse generator connected to the lowest potential input terminal, as indicated in Fig. 11(b).

EXCEPTION: For ballasts designed for operation from a grounded supply and where one terminal or lead is specifically labeled as the grounded terminal, the condition specified in (2) is not applicable.

10.3.4 Autotransformer Ballasts – High Power Factor. The following shall apply:

(1) Where the power factor correction capacitor(s) is connected across the input terminals, test the ballast in the manner described in 10.3.3, except with the capacitor(s) disconnected. Test capacitor(s) separately, as indicated in 10.3.6.

(2) Requirements for ballasts utilizing power factor correction capacitors connected across an extended portion of the autotransformer primary are under development.

10.3.5 Autotransformer Ballasts – Lead Type. The following shall apply:

(1) Test between the lowest potential input terminal and common terminal with common terminal, core, and capacitor case(s) grounded. Capacitor(s) should be connected in their normal circuit position. See Fig. 12(a).

(2) Same as (1), except with the grounded lead from the impulse generator connected to lowest potential input terminal, as indicated in Fig. 12(b).

EXCEPTION: For ballasts designed for operation from a grounded supply and where one terminal or lead is specifically labeled as the grounded terminal, the condition specified in (2) is not applicable.

10.3.6 Capacitors Used across the Input Terminals of the Ballast. Test between the input terminals tied together and case with the case grounded, as indicated in Fig. 13.

10.3.7 Insulated Winding Ballasts. Connect capacitors in their normal operating position in the circuit.

(1) Test between the input terminals with one input terminal, core, capacitor case, and the transformer output winding lead which is connected to the lamp grounded, as indicated in Fig. 14(a) and (b).

(2) Same as (1), except with the grounded lead from the impulse generator connected to the other input terminal, as indicated in Fig. 14(c) and (d).

(3) For ballasts with series-parallel primaries, the TIL requirements should be met for both modes of connection.

(4) For ballasts with tapped primary windings, the TIL requirements should be met when the impulse wave is impressed between any primary input terminal and the common terminal, with one input terminal, core, capacitor case, and the output lead which would be connected to the lamp grounded.

(5) Same as (4), except with the grounded lead from the impulse generator connected to the other input terminal.

11. Revision of American National Standards Referred to in This Document

When any of the American National Standards referred to in this document is superseded by a revision approved by the American National Standards Institute, the revision shall apply.

Copyright National Electrical Manufacturers Association
Provided by IHS under license with NEMA
No reproduction or networking permitted without license from IHS

Not for Resale

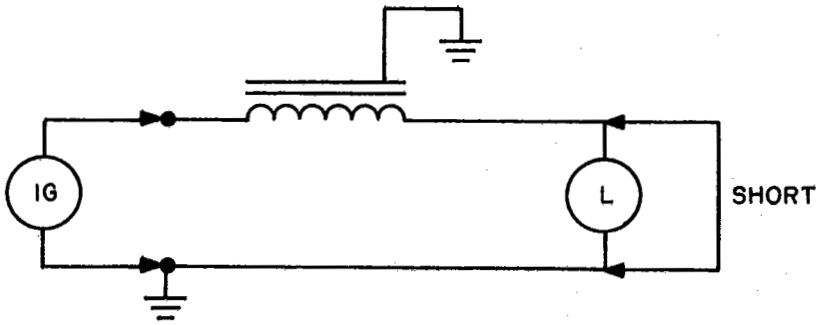

Fig. 10
Impulse Test Circuit for Reactor Ballasts

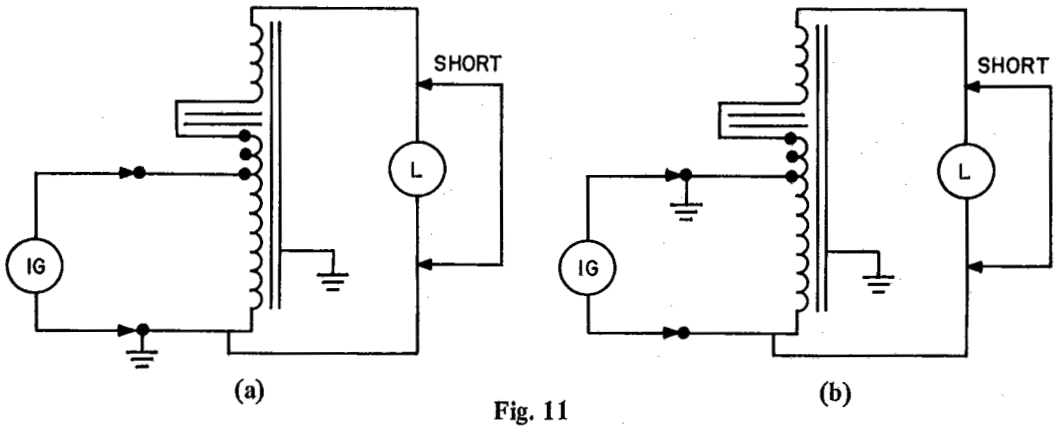

Fig. 11
Impulse Test Circuit for Autotransformer Ballasts

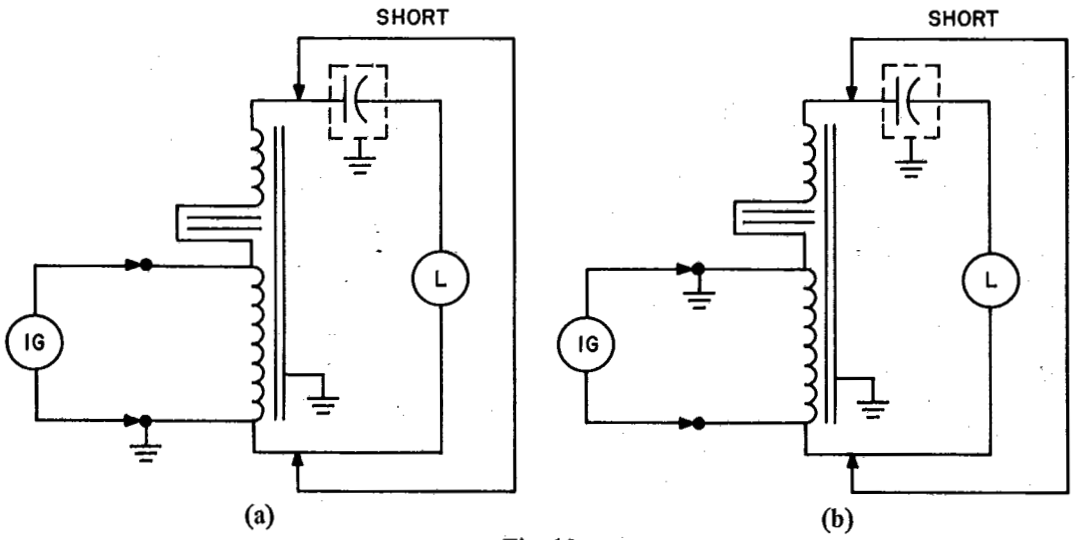

Fig. 12
Impulse Test Circuit for Autotransformer Ballasts – Lead Type

Copyright National Electrical Manufacturers Association
Provided by IHS under license with NEMA
No reproduction or networking permitted without license from IHS
Not for Resale

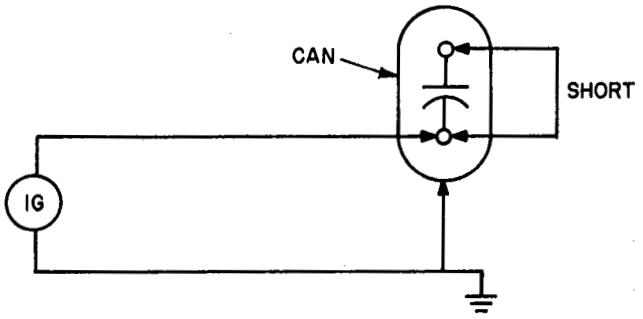

Fig. 13
Impulse Test Circuit for Capacitors Used for Power Factor Correction

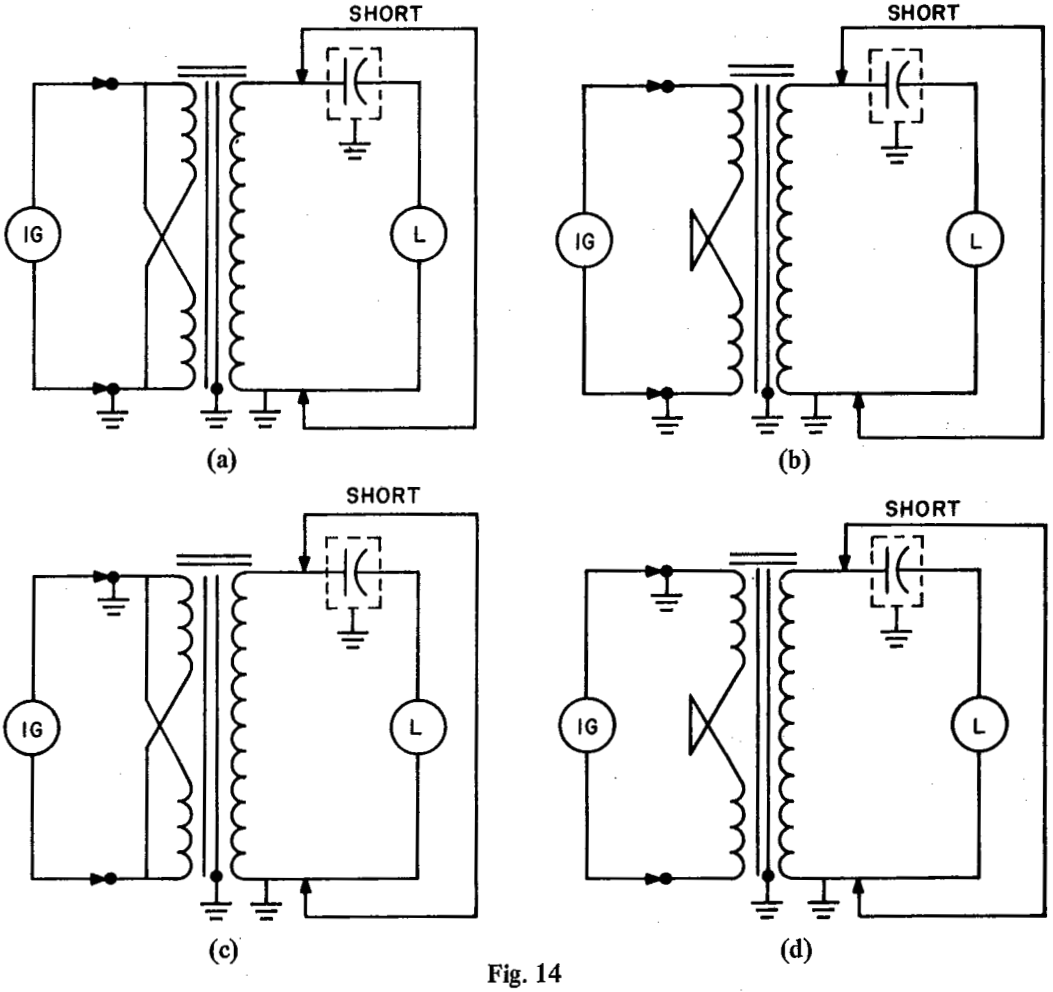

Fig. 14
Impulse Test Circuit for Insulated Winding Ballasts

Copyright National Electrical Manufacturers Association
Provided by IHS under license with NEMA
No reproduction or networking permitted without license from IHS
Not for Resale

Ready Access to the World's Standards through ANSI

Are you seeking a standard vital to your interests? Turn to the American National Standards Institute, which performs a unique function as America's clearinghouse and information center for national, international, regional, and foreign standards.

ANSI is the sole source of *all* approved American National Standards. In addition, the Institute is the U.S. source for all international standards and drafts of the International Organization for Standardization (ISO), International Electrotechnical Commission (IEC), and of the publications of ISO member bodies. And that's not all . . .

Here's a capsule summary of the wealth of materials available from ANSI —

STANDARDS

- *All approved American National Standards in print. A standing order service is available to standards users who wish to receive new and revised standards automatically.*
- *ISO and IEC International Standards*
- *ISO Draft International Standards*
- *IEC Six Months' Rule Drafts*
- *CEN Proposals — Draft European Standards developed and issued for preliminary vote by the European Committee for Standardization (CEN).*
- *CENELEC/CECC Proposals — Draft specifications issued by CECC, the Electronic Components Committee of the European Committee for Electrotechnical Standardization (CENELEC)*
- *Standards of 89 national standards organizations that belong to ISO*
- *English translations of thousands of foreign standards*

CATALOGS

- *Annual Catalog of American National Standards. Supplements are published several times a year.*
- *Latest catalogs issued by ISO, IEC, and 55 members of ISO*
- *Foreign catalogs in English translation*
- *Specialized listings of American National Standards in fields ranging from information processing to safety and health*

Available in Microform

American National Standards are available in microform from: Information Handling Services, Inverness Business Park, 15 Inverness Way East, P.O. Box 1154, Englewood, Colorado 80110; tel (303) 779-0600: and from Information Marketing, Inc, 13251 Northend Street, Oak Park, Michigan 48237; tel (313) 546-6706. All ISO and IEC standards may be obtained in microform from Information Handling Services.

Copyright National Electrical Manufacturers Association
Provided by IHS under license with NEMA
No reproduction or networking permitted without license from IHS

Not for Resale

American National Standards

The standard in this booklet is one of 8000 standards approved to date by the American National Standards Institute.

The Standards Institute provides the machinery for creating voluntary standards. It serves to eliminate duplication of standards activities and to weld conflicting standards into single, nationally accepted standards under the designation "American National Standards."

Each standard represents general agreement among maker, seller, and user groups as to the best current practice with regard to some specific problem. Thus the completed standards cut across the whole fabric of production, distribution, and consumption of goods and services. American National Standards, by reason of Institute procedures, reflect a national consensus of manufacturers, consumers, and scientific, technical, and professional organizations, and governmental agencies. The completed standards are used widely by industry and commerce and often by municipal, state, and federal governments.

The Standards Institute, under whose auspices this work is being done, is the United States clearinghouse and coordinating body for voluntary standards activity on the national level. It is a federation of trade associations, technical societies, professional groups, and consumer organizations. Some 1000 companies are affiliated with the Institute as company members.

The American National Standards Institute is the United States member of the International Organization for Standardization (ISO) and the International Electrotechnical Commission (IEC). Through these channels U.S. standards interests make their positions felt on the international level. American National Standards are on file in the libraries of the national standards bodies of more than 60 countries.

American National Standards Institute, Inc
1430 Broadway
New York, N.Y. 10018

Copyright National Electrical Manufacturers Association
Provided by IHS under license with NEMA
No reproduction or networking permitted without license from IHS

Not for Resale