ANSI/IEC C81.63x-2001
Supplement to ANSI C81.63-1990 (R1996)

Nationally Acknowledged International Standard

Approved May 18, 2001

Secretariat: American National Standards Lighting Group
In Affiliation with National Electrical Manufacturers Association

Supplement to
American National Standard for

Gauges and Electrical Lamps and Lampholders

GZ4 Gauges

A Nationally Acknowledged International Standard implies a consensus of those substantially concerned with its scope and provisions. This Standard is intended as a guide to aid the manufacturer, the consumer, and the general public. The use of a Nationally Acknowledged International Standard is completely voluntary; its existence does not in any respect preclude anyone, whether he has approved the standard or not, from manufacturing, marketing, purchasing, or using products, processes, or procedures not conforming to the standard.

The American National Standards Institute does not develop standards and will in no circumstances give an interpretation of any Standard. Moreover, no person shall have the right or authority to issue an interpretation of a National or International Standard in the name of the American National Standards Institute. Requests for interpretations should be addressed to the secretariat or sponsor whose name appears on the title page of this Standard.

Copyright © 2001 by American National Standards Lighting Group, in Affiliation with National Electrical Manufacturers Association, 1300 North 17th Street, Suite 1847, Rosslyn, VA 22209

Copyright National Electrical Manufacturers Association
Provided by IHS under license with NEMA
No reproduction or networking permitted without license from IHS

Not for Resale

Nationally Acknowledged International Standard

This is the first of a new generation of ANSI standards. It contains Standard Sheets from IEC publications that cover internationally-manufactured lighting components as well as those of American manufacture. These IEC Sheets have been adopted as a supplement to the existing American National Standard.

Approval of a Nationally Acknowledged International Standard requires verification by ANSI that the requirements for due process, consensus, and other criteria for approval have been met by the standards developer.

Consensus is established when, in the judgment of the ANSI Board of Standards Review, substantial agreement has been reached by directly and materially affected interests. Substantial agreement means much more than a simple majority, but not necessarily unanimity. Consensus requires that all views and objections be considered, and that a concerted effort be made toward their resolution.

CAUTION NOTICE: This Nationally Acknowledged International Standard may be revised or withdrawn at any time, as can the American National Standard that this supplement is appended to. The procedures of the American National Standards Institute require that action be taken periodically to reaffirm, revise, or withdraw this standard. Purchasers of standards may receive current information on all standards by calling or writing the publisher.

Published by:

Information Handling Services/Global Engineering Documents
15 Inverness Way East, Englewood, CO 80112-5776
Under Contract with National Electrical Manufacturers Association

Copyright ©2001 by American National Standards Lighting Group
In Affiliation with National Electrical Manufacturers Association
All rights reserved.

No part of this publication may be reproduced in any form, in an electronic retrieval system or otherwise, without prior written permission of the publisher.

Printed in the United States of America

Copyright © 2001 by American National Standards Lighting Group, in Affiliation with National Electrical Manufacturers Association, 1300 North 17th Street, Suite 1847, Rosslyn, VA 22209

Copyright National Electrical Manufacturers Association
Provided by IHS under license with NEMA
No reproduction or networking permitted without license from IHS

Not for Resale

Nationally Acknowledged International Standard

Approved February 5, 1998

Secretariat: American National Lighting Group
In Affiliation with National Electrical Manufacturers Association

Supplement to
American National Standard for

Gauges for Electric Lamps and Lampholders

E17, GR8, GR10q and W4.3x8.5d Gauges

A Nationally Acknowledged International Standard implies a consensus of those substantially concerned with its scope and provisions. This Standard is intended as a guide to aid the manufacturer, the consumer, and the general public. The use of a Nationally Acknowledged International Standard is completely voluntary; its existence does not in any respect preclude anyone, whether he has approved the standard or not, from manufacturing, marketing, purchasing, or using products, processes, or procedures not conforming to the standard.

The American National Standards Institute does not develop standards and will in no circumstances give an interpretation of any Standard. Moreover, no person shall have the right or authority to issue an interpretation of a National or International Standard in the name of the American National Standards Institute. Requests for interpretations should be addressed to the secretariat or sponsor whose name appears on the title page of this Standard.

Copyright © 1998 by American National Lighting Group, In Affiliation with National Electrical Manufacturers Association, 1300 North 17th Street, Suite 1847, Rosslyn, VA 22209

First Edition
August 1999

Copyright National Electrical Manufacturers Association
Provided by IHS under license with NEMA
No reproduction or networking permitted without license from IHS

Not for Resale

Nationally Acknowledged International Standard

This is another in a new generation of ANSI standards. It contains Standard Sheets from IEC publications that cover internationally-manufactured parts as well as those of American manufacture. These IEC Sheets have been adopted as a supplement to the existing American National Standard.

Approval of a Nationally Acknowledged International Standard requires verification by ANSI that the requirements for due process, consensus, and other criteria for approval have been met by the standards developer.

Consensus is established when, in the judgment of the ANSI Board of Standards Review, substantial agreement has been reached by directly and materially affected interests. Substantial agreement means much more than a simple majority, but not necessarily unanimity. Consensus requires that all views and objections be considered, and that a concerted effort be made toward their resolution.

CAUTION NOTICE: This Nationally Acknowledged International Standard may be revised or withdrawn at any time, as can the American National Standard that this supplement is appended to. The procedures of the American National Standards Institute require that action be taken periodically to reaffirm, revise, or withdraw this standard. Purchasers of Standards may receive current information on all standards by calling or writing the publisher.

Published by:

Information Handling Services/Global Engineering Documents
15 Inverness Way East, Englewood, CO 80112-5776
Under Contract with National Electrical Manufacturers Association

Copyright ©1998 by American National Lighting Group
In Affiliation with National Electrical Manufacturers Association
All rights reserved.

No part of this publication may be reproduced in any form, in an electronic retrieval system or otherwise, without prior written permission of the publisher.

Printed in the United States of America

Copyright © 1998 by American National Lighting Group, In Affiliation with National Electrical Manufacturers Association, 1300 North 17th Street, Suite 1847, Rosslyn, VA 22209

First Edition
August 1999

Copyright National Electrical Manufacturers Association
Provided by IHS under license with NEMA
No reproduction or networking permitted without license from IHS

Not for Resale

6470247 0523149 193

ANSI/IEC C81.63v-2000
Supplement to ANSI C81.63-1990 (R1996)

Nationally Acknowledged International Standard

Approved January 3, 2001

Secretariat: American National Standards Lighting Group
In Affiliation with National Electrical Manufacturers Association

Supplement to
American National Standard for

Gauges and Electrical Lamps and Lampholders

BY22d Gauges

A Nationally Acknowledged International Standard implies a consensus of those substantially concerned with its scope and provisions. This Standard is intended as a guide to aid the manufacturer, the consumer, and the general public. The use of a Nationally Acknowledged International Standard is completely voluntary; its existence does not in any respect preclude anyone, whether he has approved the standard or not, from manufacturing, marketing, purchasing, or using products, processes, or procedures not conforming to the standard.

The American National Standards Institute does not develop standards and will in no circumstances give an interpretation of any Standard. Moreover, no person shall have the right or authority to issue an interpretation of a National or International Standard in the name of the American National Standards Institute. Requests for interpretations should be addressed to the secretariat or sponsor whose name appears on the title page of this Standard.

Copyright © 2001 by American National Standards Lighting Group, in Affiliation with National Electrical Manufacturers Association, 1300 North 17th Street, Suite 1847, Rosslyn, VA 22209

Copyright National Electrical Manufacturers Association
Provided by IHS under license with NEMA
No reproduction or networking permitted without license from IHS

Not for Resale

6470247 0523150 905

Nationally Acknowledged International Standard

This is the first of a new generation of ANSI standards. It contains Standard Sheets from IEC publications that cover internationally-manufactured lighting components as well as those of American manufacture. These IEC Sheets have been adopted as a supplement to the existing American National Standard.

Approval of a Nationally Acknowledged International Standard requires verification by ANSI that the requirements for due process, consensus, and other criteria for approval have been met by the standards developer.

Consensus is established when, in the judgment of the ANSI Board of Standards Review, substantial agreement has been reached by directly and materially affected interests. Substantial agreement means much more than a simple majority, but not necessarily unanimity. Consensus requires that all views and objections be considered, and that a concerted effort be made toward their resolution.

CAUTION NOTICE: This Nationally Acknowledged International Standard may be revised or withdrawn at any time, as can the American National Standard that this supplement is appended to. The procedures of the American National Standards Institute require that action be taken periodically to reaffirm, revise, or withdraw this standard. Purchasers of standards may receive current information on all standards by calling or writing the publisher.

Published by:

Information Handling Services/Global Engineering Documents
15 Inverness Way East, Englewood, CO 80112-5776
Under Contract with National Electrical Manufacturers Association

Copyright ©2001 by American National Standards Lighting Group
In Affiliation with National Electrical Manufacturers Association
All rights reserved.

No part of this publication may be reproduced in any form, in an electronic retrieval system or otherwise, without prior written permission of the publisher.

Printed in the United States of America

Copyright © 2001 by American National Standards Lighting Group, in Affiliation with National Electrical Manufacturers Association, 1300 North 17th Street, Suite 1847, Rosslyn, VA 22209

Copyright National Electrical Manufacturers Association
Provided by IHS under license with NEMA
No reproduction or networking permitted without license from IHS

Not for Resale

6470247 0521822 532

ANSI/IEC C81.63u-1998
Supplement to ANSI C81.63-1990 (R1996)

Nationally Acknowledged International Standard

Approved September 22, 1999

Secretariat: American National Lighting Group
In Affiliation with National Electrical Manufacturers Association

Supplement to
American National Standard for

Gauges and Electrical Lamps and Lampholders

W2.5 x 16 Bases

A Nationally Acknowledged International Standard implies a consensus of those substantially concerned with its scope and provisions. This Standard is intended as a guide to aid the manufacturer, the consumer, and the general public. The use of a Nationally Acknowledged International Standard is completely voluntary; its existence does not in any respect preclude anyone, whether he has approved the standard or not, from manufacturing, marketing, purchasing, or using products, processes, or procedures not conforming to the standard.

The American National Standards Institute does not develop standards and will in no circumstances give an interpretation of any Standard. Moreover, no person shall have the right or authority to issue an interpretation of a National or International Standard in the name of the American National Standards Institute. Requests for interpretations should be addressed to the secretariat or sponsor whose name appears on the title page of this Standard.

Copyright © 1999 by American National Lighting Group, in Affiliation with National Electrical Manufacturers Association, 1300 North 17th Street, Suite 1847, Rosslyn, VA 22209

Copyright National Electrical Manufacturers Association
Provided by IHS under license with NEMA
No reproduction or networking permitted without license from IHS

Not for Resale

6470247 0521823 479

Nationally Acknowledged International Standard

This is the first of a new generation of ANSI standards. It contains Standard Sheets from IEC publications that cover internationally-manufactured lighting components as well as those of American manufacture. These IEC Sheets have been adopted as a supplement to the existing American National Standard.

Approval of a Nationally Acknowledged International Standard requires verification by ANSI that the requirements for due process, consensus, and other criteria for approval have been met by the standards developer.

Consensus is established when, in the judgment of the ANSI Board of Standards Review, substantial agreement has been reached by directly and materially affected interests. Substantial agreement means much more than a simple majority, but not necessarily unanimity. Consensus requires that all views and objections be considered, and that a concerted effort be made toward their resolution.

CAUTION NOTICE: This Nationally Acknowledged International Standard may be revised or withdrawn at any time, as can the American National Standard that this supplement is appended to. The procedures of the American National Standards Institute require that action be taken periodically to reaffirm, revise, or withdraw this standard. Purchasers of standards may receive current information on all standards by calling or writing the publisher.

Published by:

Information Handling Services/Global Engineering Documents
15 Inverness Way East, Englewood, CO 80112-5776
Under Contract with National Electrical Manufacturers Association

Copyright ©1999 by American National Lighting Group
In Affiliation with National Electrical Manufacturers Association
All rights reserved.

No part of this publication may be reproduced in any form, in an electronic retrieval system or otherwise, without prior written permission of the publisher.

Printed in the United States of America

Copyright © 1999 by American National Lighting Group, in Affiliation with National Electrical Manufacturers Association, 1300 North 17th Street, Suite 1847, Rosslyn, VA 22209

Copyright National Electrical Manufacturers Association
Provided by IHS under license with NEMA
No reproduction or networking permitted without license from IHS Not for Resale

ANSI/IEC C81.63t-1998
Supplement to ANSI C81.63-1991 (R1996)

Nationally Acknowledged International Standard

Approved June 24, 1998

Secretariat: American National Lighting Group
In Affiliation with National Electrical Manufacturers Association

Supplement to
American National Standard for

Gauges for Electric Lamps and Lampholders

G/GX/GY24 and S14 Gauges

A Nationally Acknowledged International Standard implies a consensus of those substantially concerned with its scope and provisions. This Standard is intended as a guide to aid the manufacturer, the consumer, and the general public. The use of a Nationally Acknowledged International Standard is completely voluntary; its existence does not in any respect preclude anyone, whether he has approved the standard or not, from manufacturing, marketing, purchasing, or using products, processes, or procedures not conforming to the standard.

The American National Standards Institute does not develop standards and will in no circumstances give an interpretation of any Standard. Moreover, no person shall have the right or authority to issue an interpretation of a National or International Standard in the name of the American National Standards Institute. Requests for interpretations should be addressed to the secretariat or sponsor whose name appears on the title page of this Standard.

Copyright © 1998 by American National Lighting Group, In Affiliation with National Electrical Manufacturers Association, 1300 North 17th Street, Suite 1847, Rosslyn, VA 22209

Copyright National Electrical Manufacturers Association
Provided by IHS under license with NEMA
No reproduction or networking permitted without license from IHS

Not for Resale

ANSI/IEC C81.63t-1998
Supplement to ANSI C81.63-1991 (R1996)

Nationally Acknowledged International Standard

This is one of a new generation of ANSI standards. It contains the *English only* text of an IEC publication that covers internationally-manufactured lighting components as well as those of American manufacture.

Approval of a Nationally Acknowledged International Standard requires verification by ANSI that the requirements for due process, consensus, and other criteria for approval have been met by the standards developer.

Consensus is established when, in the judgment of the ANSI Board of Standards Review, substantial agreement has been reached by directly and materially affected interests. Substantial agreement means much more than a simple majority, but not necessarily unanimity. Consensus requires that all views and objections be considered, and that a concerted effort be made toward their resolution.

CAUTION NOTICE: This Nationally Acknowledged International Standard may be revised or withdrawn at any time, as can the American National Standard that this supplement is appended to. The procedures of the American National Standards Institute require that action be taken periodically to reaffirm, revise, or withdraw this standard. Purchasers of Standards may receive current information on all standards by calling or writing the publisher.

DISCLAIMER: The standards or guidelines presented in a NEMA Standards Publication are considered technically sound at the time they are approved for publication. They are not a substitute for a product seller's or user's own judgment with respect to the particular product referenced in the standard or guideline, and NEMA does not undertake to guaranty the performance of any individual manufacturer's products by virtue of this standard or guide. Thus, NEMA expressly disclaims any responsibility for damages arising from the use, application, or reliance by others on the information contained in these standards or guidelines.

Printed and distributed by:

Information Handling Services/Global Engineering Documents
15 Inverness Way East, Englewood, CO 80112-5776
Under Contract with National Electrical Manufacturers Association

Copyright © 1998 by American National Lighting Group
In Affiliation with National Electrical Manufacturers Association. All rights reserved.

No part of this publication may be reproduced in any form, in an electronic retrieval system or otherwise, without prior written permission of the publisher.

Printed in the United States of America

Copyright © 1998 by American National Lighting Group, In Affiliation with National Electrical Manufacturers Association, 1300 North 17th Street, Suite 1847, Rosslyn, VA 22209

Copyright National Electrical Manufacturers Association
Provided by IHS under license with NEMA
No reproduction or networking permitted without license from IHS

Not for Resale

6470247 0521789 480

ANSI/IEC C81.63ss-1999
Supplement to ANSI C81.63-1991 (R1996)

Nationally Acknowledged International Standard

Approved March 22, 1999

Secretariat: American National Lighting Group
In Affiliation with National Electrical Manufacturers Association

Supplement to
American National Standard for

Gauges for Electric Lamps and Lampholders

GU7 & PG12/PGX12 Gauges

A Nationally Acknowledged International Standard implies a consensus of those substantially concerned with its scope and provisions. This Standard is intended as a guide to aid the manufacturer, the consumer, and the general public. The use of a Nationally Acknowledged International Standard is completely voluntary; its existence does not in any respect preclude anyone, whether he has approved the standard or not, from manufacturing, marketing, purchasing, or using products, processes, or procedures not conforming to the standard.

The American National Standards Institute does not develop standards and will in no circumstances give an interpretation of any Standard. Moreover, no person shall have the right or authority to issue an interpretation of a National or International Standard in the name of the American National Standards Institute. Requests for interpretations should be addressed to the secretariat or sponsor whose name appears on the title page of this standard.

Copyright © 1999 by American National Lighting Group, In Affiliation with National Electrical Manufacturers Association, 1300 North 17th Street, Suite 1847, Rosslyn, VA 22209

First Edition
March 1999

Copyright National Electrical Manufacturers Association
Provided by IHS under license with NEMA
No reproduction or networking permitted without license from IHS

Not for Resale

6470247 0521790 1T2

ANSI/IEC C81.63ss-1999
Supplement to ANSI C81.63-1991 (R1996)

Nationally Acknowledged International Standard

This is the first of a new generation of ANSI standards. It contains Standard Sheets from IEC publications that cover internationally-manufactured parts as well as those of American manufacture. These IEC Sheets have been adopted as a supplement to the existing American National Standard.

Approval of a Nationally Acknowledged International Standard requires verification by ANSI that the requirements for due process, consensus, and other criteria for approval have been met by the standards developer.

Consensus is established when, in the judgment of the ANSI Board of Standards Review, substantial agreement has been reached by directly and materially affected interests. Substantial agreement means much more than a simple majority, but not necessarily unanimity. Consensus requires that all views and objections be considered, and that a concerted effort be made toward their resolution.

CAUTION NOTICE: This Nationally Acknowledged International Standard may be revised or withdrawn at any time, as can the American National Standard that this supplement is appended to. The procedures of the American National Standards Institute require that action be taken periodically to reaffirm, revise, or withdraw this standard. Purchasers of standards may receive current information on all standards by calling or writing the publisher.

Published by:

Information Handling Services/Global Engineering Documents
15 Inverness Way East, Englewood, CO 80112-5776
Under Contract with National Electrical Manufacturers Association

Copyright ©1999 by American National Lighting Group
In Affiliation with National Electrical Manufacturers Association
All rights reserved.

No part of this publication may be reproduced in any form, in an electronic retrieval system or otherwise, without prior written permission of the publisher.

Printed in the United States of America

Copyright © 1999 by American National Lighting Group, In Affiliation with National Electrical Manufacturers Association, 1300 North 17th Street, Suite 1847, Rosslyn, VA 22209

First Edition
March 1999

Copyright National Electrical Manufacturers Association
Provided by IHS under license with NEMA
No reproduction or networking permitted without license from IHS
Not for Resale

ANSI C81.63s-1998
Supplement to ANSI C81.63-1991 (R1996)

American National Standard

Approved March 3, 1998 Secretariat: National Electrical Manufacturers Association

for electric lamps—

Gauges for Electric Lamps and Lampholders

An American National Standard implies a consensus of those substantially concerned with its scope and provisions. An American National Standard is intended as a guide to aid the manufacturer, the consumer, and the general public. The existence of an American National Standard does not in any respect preclude anyone, whether he has approved the standard or not, from manufacturing, marketing, purchasing, or using products, processes, or procedures not conforming to the standard.
The American National Standards Institute does not develop standards and will in no circumstances give an interpretation of any American National Standard. Moreover, no person shall have the right or authority to issue an interpretation of an American National Standard in the name of the American National Standards Institute. Requests for interpretations should be addressed to the secretariat or sponsor whose name appears on the title page of this standard.
CAUTION NOTICE: This American National Standard may be revised or withdrawn at any time. The procedures of the American National Standards Institute require that action be taken periodically to reaffirm, revise, or withdraw this standard. Purchasers of American National Standards may receive current information on all standards by calling or writing the American National Standards Institute.

Copyright © 1998 by National Electrical Manufacturers Association
1300 North 17th Street, Suite 1847, Rosslyn, VA 22209

First Edition
October 1998

Copyright National Electrical Manufacturers Association
Provided by IHS under license with NEMA
No reproduction or networking permitted without license from IHS
Not for Resale

ANSI C81.63s-1998
Supplement to ANSI C81.63-1991 (R1996)

American National Standard

Approval of an American National Standard requires verification by ANSI that the requirements for due process, consensus, and other criteria for approval have been met by the standards developer.

Consensus is established when, in the judgment of the ANSI Board of Standards Review, substantial agreement has been reached by directly and materially affected interests. Substantial agreement means much more than a simple majority, but not necessarily unanimity. Consensus requires that all views and objections be considered, and that a concerted effort be made toward their resolution.

The use of American National Standards is completely voluntary; their existence does not in any respect preclude anyone, whether he has approved the standards or not, from manufacturing, marketing, purchasing, or using products, processes, or procedures not conforming to the standards.

The American National Standards Institute does not develop standards and will in no circumstances give an interpretation of any American National Standard. More over, no person shall have the right or authority to issue an interpretation of an American National Standard in the name of the American National Standards Institute. Requests for interpretations should be addressed to the secretariat or sponsor whose name appears on the title page of this standard.

CAUTION NOTICE: This American National Standard may be revised or withdrawn at any time. The procedures of the American National Standards Institute require that action be taken periodically to reaffirm, revise, or withdraw this standard. Purchasers of American National Standards may receive current information on all standards by calling or writing the American National Standards Institute.

Published by
National Electrical Manufacturers Association
1300 North 17th Street, Suite 1847, Rosslyn, VA 22209

Copyright ©1998 by National Electrical Manufacturers Association
All rights reserved.

No part of this publication may be reproduced in any form, in an electronic retrieval system or otherwise, without prior written permission of the publisher.

Printed in the United States of America

Copyright © 1998 by National Electrical Manufacturers Association
1300 North 17th Street, Suite 1847, Rosslyn, VA 22209

First Edition
October 1998

Copyright National Electrical Manufacturers Association
Provided by IHS under license with NEMA
No reproduction or networking permitted without license from IHS

Not for Resale

ANSI C81.63n-1997
Supplement to ANSI C81.63-1991 (R1996)

American National Standard

Approved September 25, 1997 Secretariat: National Electrical Manufacturers Association

for electric lamps:

Gauges

An American National Standard implies a consensus of those substantially concerned with its scope and provisions. It is intended as a guide to aid the manufacturer, the consumer, and the general public. The existence of an American National Standard does not in any respect preclude anyone, whether he has approved the standard or not, from manufacturing, marketing, purchasing, or using products, processes, or procedures not conforming to the standards. Users are cautioned to obtain the latest editions.
The American National Standards Institute does not develop standards and will in no circumstances give an interpretation of any American National Standard. Moreover, no person shall have the right or authority to issue an interpretation of an American National Standard in the name of the American National Standards Institute.
CAUTION NOTICE: This American National Standard may be revised or withdrawn at any time. The procedures of the American National Standards Institute require that action be taken periodically to reaffirm, revise, or withdraw this standard. Purchasers of American National Standards may receive current information on all standards by calling or writing the American National Standards Institute.

Copyright © 1997 by National Electrical Manufacturers Association
1300 North 17th Street, Suite 1847, Rosslyn, VA 22209

First Edition
December 1997

Copyright National Electrical Manufacturers Association
Provided by IHS under license with NEMA
No reproduction or networking permitted without license from IHS
Not for Resale

American National Standard

Approval of an American National Standard requires verification by ANSI that the requirements for due process, consensus, and other criteria for approval have been met by the standards developer. An American National Standard implies a consensus of those substantially concerned with its scope and provisions. Consensus is established when, in the judgment of the ANSI Board of Standards Review, substantial agreement has been reached by directly and materially affected interests. Substantial agreement means much more than a simple majority, but not necessarily unanimity. Consensus requires that all views and objections be considered, and that a concerted effort be made toward their resolution. The existence of an American National Standard does not in any respect preclude anyone, whether he has approved the standard or not, from manufacturing, marketing, purchasing, or using products, processes, or procedures not conforming to the standards. It is intended as a guide to aid the manufacturer, the consumer, and the general public.

The American National Standards Institute does not develop standards and will in no circumstances give an interpretation of any American National Standard. Moreover, no person shall have the right or authority to issue an interpretation of an American National Standard in the name of the American National Standards Institute. Requests for interpretations should be addressed to the secretariat or sponsor whose name appears on this title page.

CAUTION NOTICE: This American National Standard may be revised or withdrawn at any time. The procedures of the American National Standards Institute require that action be taken periodically to reaffirm, revise, or withdraw this standard. Purchasers of American National Standards may receive current information on all standards by calling or writing the American National Standards Institute.

Published by

National Electrical Manufacturers Association

No part of this publication may be reproduced in any form, in an electronic retrieval system or otherwise, without prior written permission of the publisher.

Printed in the United States of America

Copyright © 1997 by National Electrical Manufacturers Association
1300 North 17th Street, Suite 1847, Rosslyn, VA 22209

First Edition
December 1997

Copyright National Electrical Manufacturers Association
Provided by IHS under license with NEMA
No reproduction or networking permitted without license from IHS

Not for Resale

ANSI C81.63k-1997
Supplement to C81.63-1991 (R1996)

American National Standard

Approved November 24, 1997 Secretariat: American National Standards Lighting Group - NEMA

For Electric Lamps:

BA15 "Go" Gauge for Candelabra Bayonet Based Lampholder

Information concerning the approval of this Supplement is based on the documents listed in the table below:

LB	RV
C81/2192 C81/2203	C81/2277 C81/2778

An American National Standard implies a consensus of those substantially concerned with its scope and provisions. It is intended as a guide to aid the manufacturer, the consumer, and the general public. The existence of an American National Standard does not in any respect preclude anyone, whether he has approved the standard or not, from manufacturing, marketing, purchasing, or using products, processes, or procedures not conforming to the standards. Users are cautioned to obtain the latest editions.
The American National Standards Institute does not develop standards and will in no circumstances give an interpretation of any American National Standard. Moreover, no person shall have the right or authority to issue an interpretation of an American National Standard in the name of the American National Standards Institute.
CAUTION NOTICE: This American National Standard may be revised or withdrawn at any time. The procedures of the American National Standards Institute require that action be taken periodically to reaffirm, revise, or withdraw this standard. Purchasers of American National Standards may receive current information on all standards by calling or writing the American National Standards Institute.

Copyright © 1997 by American National Standard Lighting Group- NEMA
1300 North 17th Street Suite 1847, Rosslyn, VA 22209

Copyright National Electrical Manufacturers Association
Provided by IHS under license with NEMA
No reproduction or networking permitted without license from IHS
Not for Resale

American National Standard

Approval of an American National Standard requires verification by ANSI that the requirements for due process, consensus, and bther criteria for approval have been met by he standards developer. An American National Standard implies a consensus of those substantially concerned with its scope and provisions. Consensus is established when, in the judgment of the ANSI Board of Standards Review, substantial agreement has been reached by directly and materially affected interests. Substantial agreement means much more than a simple majority, but not necessarily unanimity. Consensus requires that all views and objections be considered, and that a concerted effort be made toward their resolution. The existence of an American National Standard does not in any respect preclude anyone, whether s/he has approved the standard or not, from manufacturing, marketing, purchasing, or using products, processes, or procedures not conforming to the standards. It is intended as a guide to aid the manufacturer, the consumer, and the general public.

The American National Standards Institute does not develop standards and will in no circumstances give an interpretation of any American National Standard. Moreover, no person shall have the right or authority to issue an interpretation of an American National Standard in the name of the American National Standards Institute. Requests for interpretations should be addressed to the Committee Secretariat referred to on the title page.

CAUTION NOTICE: This American National Standard may be revised or withdrawn at any time. The procedures of the American National Standards Institute require that action be taken periodically to reaffirm, revise, or withdraw this standard. Purchasers of American National Standards may receive current information on all standards by calling or writing the American National Standards Institute.

Printed and distributed by:

Information Handling Services/Global Engineering Documents
15 Inverness Way East, Englewood, CO 80112-5776
Under Contract with National Electrical Manufacturers Association

Copyright ©2001 by American National Standard Lighting Group
In Affiliation with National Electrical Manufacturers Association
All rights reserved.

No part of this publication may be reproduced in any form,
in an electronic retrieval system or otherwise, without
prior written permission of the publisher.
Printed in the United States of America

Copyright © 1997 by American National Standard Lighting Group- NEMA
1300 North 17th Street Suite 1847, Rosslyn, VA 22209

Copyright National Electrical Manufacturers Association
Provided by IHS under license with NEMA
No reproduction or networking permitted without license from IHS
Not for Resale

STD.ANSI C81.63H-ENGL 1996 ■ 0724150 0537413 205 ■

ANSI C81.63h-1996
Supplement to ANSI C81.63-1991

American National Standard

Approved August 29, 1996 Secretariat: National Electrical Manufacturers Association

for electric lamps:

CONTENTS

Base	Common Name	Standard Sheet Number
W2.1x4.9d	Minimum and Maximum Retention Gauges	3-900-1
W2.1x9.2d	Minimum and Maximum Retention Gauges	3-920-1

An American National Standard implies a consensus of those substantially concerned with its scope and provisions. It is intended as a guide to aid the manufacturer, the consumer, and the general public. The existence of an American National Standard does not in any respect preclude anyone, whether he has approved the standard or not, from manufacturing, marketing, purchasing, or using products, processes, or procedures not conforming to the standards. Users are cautioned to obtain the latest editions.
The American National Standards Institute does not develop standards and will in no circumstances give an interpretation of any American National Standard. Moreover, no person shall have the right or authority to issue an interpretation of an American National Standard in the name of the American National Standards Institute.
CAUTION NOTICE: This American National Standard may be revised or withdrawn at any time. The procedures of the American National Standards Institute require that action be taken periodically to reaffirm, revise, or withdraw this standard. Purchasers of American National Standards may receive current information on all standards by calling or writing the American National Standards Institute.

Copyright © 1996 National Electrical Manufacturers Association
1300 North 17th Street, Suite 1847, Rosslyn, VA 22209

First Edition
November 1996

Copyright National Electrical Manufacturers Association
Provided by IHS under license with NEMA
No reproduction or networking permitted without license from IHS
Not for Resale

ANSI C81.63h-1996
Supplement to ANSI C81.63-1991

Copyright © 1996 National Electrical Manufacturers Association
1300 North 17th Street, Suite 1847, Rosslyn, VA 22209

First Edition
November 1996

Copyright National Electrical Manufacturers Association
Provided by IHS under license with NEMA
No reproduction or networking permitted without license from IHS

Not for Resale

American National Standard

Approved March 22, 1996 Secretariat: National Electrical Manufacturers Association

for electric lamps:

Contents

Common Name	Standard Sheet Number
Threaded "Go" Gauge for E11 Mini-Can Screw-Based Lamps and Unmounted Bases	3-123-2
"Go" and Contact-Making Gauge "B" for E11 Mini-Can Screw Lampholders	3-124-2
"Go" and Contact-Making Gauge "A" for E11 Mini-Can Screw Lampholders	3-125-2
Threaded "Go" Gauge for E17 Intermediate Screw-Based Lamps	3-144-2
"Not-Go" Ring Gauge for E17 Intermediate Screw-Based Lamps	3-145-2
Threaded "Go" Gauge for E17 Intermediate Screw-Based Lamps	3-149-2
"Not-Go" Plug Gauge for E17 Intermediate Screw-Based Lamps	3-150-2
Threaded Gauge for Testing Contact-Making of E17 Intermediate Screw Lampholders	3-151-2

An American National Standard implies a consensus of those substantially concerned with its scope and provisions. It is intended as a guide to aid the manufacturer, the consumer, and the general public. The existence of an American National Standard does not in any respect preclude anyone, whether he has approved the standard or not, from manufacturing, marketing, purchasing, or using products, processes, or procedures not conforming to the standards. Users are cautioned to obtain the latest editions.
The American National Standards Institute does not develop standards and will in no circumstances give an interpretation of any American National Standard. Moreover, no person shall have the right or authority to issue an interpretation of an American National Standard in the name of the American National Standards Institute.
CAUTION NOTICE: This American National Standard may be revised or withdrawn at any time. The procedures of the American National Standards Institute require that action be taken periodically to reaffirm, revise, or withdraw this standard. Purchasers of American National Standards may receive current information on all standards by calling or writing the American National Standards Institute.

Copyright © 1996 by National Electrical Manufacturers Association
1300 North 17th Street, Suite 1847, Rosslyn, VA 22209

First Edition
November 1996

Copyright National Electrical Manufacturers Association
Provided by IHS under license with NEMA
No reproduction or networking permitted without license from IHS
Not for Resale

ANSI C81.63f-1996
Supplement to ANSI C81.63-1990

Copyright © 1996 by National Electrical Manufacturers Association
1300 North 17th Street, Suite 1847, Rosslyn, VA 22209

First Edition
November 1996

Copyright National Electrical Manufacturers Association
Provided by IHS under license with NEMA
No reproduction or networking permitted without license from IHS

Not for Resale

ANSI C81.63e-1996
Supplement to ANSI C81.63-1991

American National Standard

Approved March 22, 1996 Secretariat: National Electrical Manufacturers Association

CONTENTS

Base	Common Name Number	Standard Sheet
G5	Pin Torsion Test Device for Miniature Bipin Base	3-311-1
	Torsion Test Devices for Miniature Bipin Lampholder	3-314-2

An American National Standard implies a consensus of those substantially concerned with its scope and provisions. An American National Standard is intended as a guide to aid the manufacturer, the consumer, and the general public. The existence of an American National Standard does not in any respect preclude anyone, whether he has approved the standard or not, from manufacturing, marketing, purchasing, or using products, processes, or procedures not conforming to the standard. American National Standards are subject to periodic review and users are cautioned to obtain the latest editions.
The American National Standards Institute does not develop standards and will in no circumstances give an interpretation of any American National Standard. Moreover, no person shall have the right or authority to issue an interpretation of an American National Standard in the name of the American National Standards Institute.
CAUTION NOTICE: This American National Standard may be revised or withdrawn at any time. The procedures of the American National Standards Institute require that action be taken to reaffirm, revise, or withdraw this standard no later than five years from the date of approval. Purchasers of American National Standards may receive current information on all standards by calling or writing the American National Standards Institute.

Copyright © 1996 by the National Electrical Manufacturers Association
1300 North 17th Street, Suite 1847, Rosslyn, VA 22209

First Edition
May, 1996

Copyright National Electrical Manufacturers Association
Provided by IHS under license with NEMA
No reproduction or networking permitted without license from IHS
Not for Resale

ANSI C81.63e-1996
Supplement to ANSI C81.63-1991

Copyright National Electrical Manufacturers Association
Provided by IHS under license with NEMA
No reproduction or networking permitted without license from IHS

Not for Resale

ANSI C81.63d-1995
Supplement to C81.63-1991

American National Standard

Approved November 15, 1995 Secretariat: National Electrical Manufacturers Association

CONTENTS

BASE	Common Name	Standard Sheet Number
G16d	"Go" Gauge for Mogul and Extended Mogul End-Prong Bases	3-430-2
G16d	"Go" Gauge for Mogul End-Prong Connectors	3-433-2

An American National Standard implies a consensus of those substantially concerned with its scope and provisions. An American National Standard is intended as a guide to aid the manufacturer, the consumer, and the general public. The existence of an American National Standard does not in any respect preclude anyone, whether he has approved the standard or not, from manufacturing, marketing, purchasing, or using products, processes, or procedures not conforming to the standard. American National Standards are subject to periodic review and users are cautioned to obtain the latest editions.

The American National Standards Institute does not develop standards and will in no circumstances give an interpretation of any American National Standard. Moreover, no person shall have the right or authority to issue an interpretation of an American National Standard in the name of the American National Standards Institute.

CAUTION NOTICE: This American National Standard may be revised or withdrawn at any time. The procedures of the American National Standards Institute require that action be taken to reaffirm, revise, or withdraw this standard no later than five years from the date of approval. Purchasers of American National Standards may receive current information on all standards by calling or writing the American National Standards Institute.

Copyright © 1996 by the National Electrical Manufacturers Association
1300 North 17th Street, Suite 1847, Rosslyn, VA 22209

Copyright National Electrical Manufacturers Association
Provided by IHS under license with NEMA
No reproduction or networking permitted without license from IHS Not for Resale

ANSI C81.63d-1995
Supplement to C81.63-1991

Copyright National Electrical Manufacturers Association
Provided by IHS under license with NEMA
No reproduction or networking permitted without license from IHS

Not for Resale

ANSI C81.63c-1995
Supplement to C81.63-1991

American National Standard

Approved April 18, 1995 Secretariat: National Electrical Manufacturers Association

CONTENTS

BASE	Common Name	Standard Sheet Number
G12	Plug Gauge "B"	3-403-1
G12/PG12	Single Pin Maximum Diameter Gauge "D"	3-405-1
G12/PG12	Single Pin Maximum Diameter Gauge "E"	3-405A-1
PG12	"Go" and "Not-Go" Gauges	3-545-1
PG12	Plug Gauge "A"	3-548-1
PG12	Plug Gauge "B"	3-549-1
PG12	Plug Gauge "C"	3-550-1

An American National Standard implies a consensus of those substantially concerned with its scope and provisions. An American National Standard is intended as a guide to aid the manufacturer, the consumer, and the general public. The existence of an American National Standard does not in any respect preclude anyone, whether he has approved the standard or not, from manufacturing, marketing, purchasing, or using products, processes, or procedures not conforming to the standard. American National Standards are subject to periodic review and users are cautioned to obtain the latest editions.

The American National Standards Institute does not develop standards and will in no circumstances give an interpretation of any American National Standard. Moreover, no person shall have the right or authority to issue an interpretation of an American National Standard in the name of the American National Standards Institute.

CAUTION NOTICE: This American National Standard may be revised or withdrawn at any time. The procedures of the American National Standards Institute require that action be taken to reaffirm, revise, or withdraw this standard no later than five years from the date of approval. Purchasers of American National Standards may receive current information on all standards by calling or writing the American National Standards Institute.

Copyright © 1996 by the National Electrical Manufacturers Association
1300 North 17th Street, Suite 1847, Rosslyn, VA 22209

Copyright National Electrical Manufacturers Association
Provided by IHS under license with NEMA
No reproduction or networking permitted without license from IHS
Not for Resale

ANSI C81.63c-1995
Supplement to C81.63-1991

Copyright National Electrical Manufacturers Association
Provided by IHS under license with NEMA
No reproduction or networking permitted without license from IHS

Not for Resale

ANSI C81.63b-1995
Supplement to C81.63-1991

American National Standard

Approved October 10, 1994 Secretariat: National Electrical Manufacturers Association

CONTENTS

See next page for Table of Contents

An American National Standard implies a consensus of those substantially concerned with its scope and provisions. An American National Standard is intended as a guide to aid the manufacturer, the consumer, and the general public. The existence of an American National Standard does not in any respect preclude anyone, whether he has approved the standard or not, from manufacturing, marketing, purchasing, or using products, processes, or procedures not conforming to the standard. American National Standards are subject to periodic review and users are cautioned to obtain the latest editions.

The American National Standards Institute does not develop standards and will in no circumstances give an interpretation of any American National Standard. Moreover, no person shall have the right or authority to issue an interpretation of an American National Standard in the name of the American National Standards Institute.

CAUTION NOTICE: This American National Standard may be revised or withdrawn at any time. The procedures of the American National Standards Institute require that action be taken to reaffirm, revise, or withdraw this standard no later than five years from the date of approval. Purchasers of American National Standards may receive current information on all standards by calling or writing the American National Standards Institute.

Copyright © 1995 by the National Electrical Manufacturers Association, 2101 L Street, N.W., Washingotn, D.C. 20037

Copyright National Electrical Manufacturers Association
Provided by IHS under license with NEMA
No reproduction or networking permitted without license from IHS

Not for Resale

CONTENTS

Code	Common Name	Standard Sheet Number
BA9	Miniature Bayonet Base	1-10-1
BA9	Miniature Bayonet Lampholder	2-20-1
BA9	"Go" Gauge for Miniature-Bayonet-Based Lamps	3-10-1
BA9	"Not-Go" Gauge for Miniature-Bayonet-Based Lamps	3-11-1
BA9	"Go" and "Not-Go" Plug Gauges for Miniature-Bayonet Lampholders	3-14-1
BA15s, BA15d	Candelabra Single-Contact and Double-Contact-Bayonet Bases	1-20-1
BAY15s, BAY15d	–	1-22-1
BA15/BAY15/BAZ15	Candelabra Bayonet Lampholders	2-20-1
BA15	"Go" Gauge for Candelabra-Bayonet-Based Lamps	3-20-1
BA15	"Not-Go" Gauge for Candelabra-Bayonet-Based Lamps	3-21-1
BA15	"Go" and "Not-Go" Plug Gauges for Candelabra-Bayonet Lampholders	3-24-1
BAZ15d	–	1-23-1
BY22d	–	1-30-1
BY22d	Base	1-30-2
BY22d	–	2-30-1
BY22d	Lampholder	2-30-2
BY22d	"Not-Go" Gauge for BY22d Bases on Finished Lamps	3-30-1
BY22d	"Go" Gauge for BY22d Bases on Finished Lamps	3-31-1
BY22d	Gauge for Testing the Insertion of BY22d Bases in Lampholders	3-32-1
BY22d	Plug Gauge for BY22d Lampholders	3-33-1
BY22d	Gauge for Checking Contact Position and Contact Force in BY22d Lampholders	3-34-1
BY22d	Gauge for Checking Slot Width of BY22d Lampholders	3-35-1
BY22d	Supplementary "Go" Gauge for BY22d Lampholders	3-36-1
E5	Midget Screw Base	1-100-1
E5	Midget Screw Lampholder	2-100-1
E5	Threaded "Go" Gauge for Midget-Screw-Based Lamps	3-100-1
E5	"Not-Go" Gauge for Midget-Screw-Based Lamps	3-101-1
E5	Threaded "Go" Gauge for Midget-Screw Lampholders	3-104-1
E5	"Not-Go" Plug Gauge for Midget-Screw Lampholders	3-105-1
E10	Miniature Screw Base	1-111-1
E10	Miniature Screw Lampholder	2-111-1
E10	"Not-Go" Ring Gauge for Miniature-Screw-Based Lamps and Unmounted Bases	3-111-1
E10	Threaded Gauge for Testing Contact-Making of Miniature-Screw-Based Lamps	3-112-1
E10	Threaded "Go" Gauge for Miniature-Screw Lampholders	3-115-1
E10	"Not-Go" Plug Gauge for Miniature-Screw Lampholders	3-116-1
E10	Threaded Gauge for Testing Contact-Making of Miniature-Screw Lampholders	3-117-1
E11	Mini-Can Screw Base	1-123-1
E11	Mini-Can Screw Lampholder	2-123-1
E11	Seating "Go" Gauge for Mini-Can-Screw-Based Lamps	3-123-1
E11	Threaded Gauge for Testing Contact-Making of Mini-Can-Screw Lampholders	3-125-1

*No standard sheet has been issued for this item. The sheet number is held in reserve.

Copyright National Electrical Manufacturers Association
Provided by IHS under license with NEMA
No reproduction or networking permitted without license from IHS
Not for Resale

CONTENTS

Code	Common Name	Standard Sheet Number
E12	Threaded "Go" Gauge for Candelabra-Screw-Based Lamps	3-130-1
E12	Threaded "Go" Gauge for E12 Candelabra-Screw Based Lamps	3-130-2
E12	Candelabra-Screw Base	1-131-1
E12	"Go" Ring Gauge for E12 Candelabra-Screw Based Lamps	3-131-1
E12	Candelabra-Screw Base	1-131-2
E12	Candelabra-Screw Lampholder	2-131-1
E12	Candelabra-Screw Lampholder	2-131-2
E12	"Go" Ring Gauge for E12 Candelabra-Screw Based Lamps	3-131-1
E12	"Go" Ring Gauge for Candelabra-Screw-Based Lamps	3-131-x *
E12	"Not-Go" Ring Gauge for Candelabra-Screw-Based Lamps	3-132-1
E12	"Not-Go" Ring Gauge for E12 Candelabra-Screw Based Lamps	3-132-2
E12	Gauge for Testing Contact-Making of Candelabra-Screw-Based Lamps	3-133-1
E12	Gauge for Testing Contact Making of #12 Candelabra Screw Based Lamps	3-133-2
E12	Threaded "Go" Gauge for Candelabra-Screw Lampholders	3-136-1
E12	Threaded "Go" Gauge for #12 Candelabra-Screw Lampholders	3-136-2
E12	"Not-Go" Plug Gauge for Candelabra-Screw Lampholders	3-137-1
E12	"Not-Go" Plug Gauge for E12 Candelabra-Screw Lampholders	3-137-2
E12	Threaded Gauge for Testing Contact-Making of Candelabra-Screw Lampholders	3-138-1
E12	Threaded Gauge for Testing Contact Making of E12 Candelabra-Screw Lampholder	3-138-2
E17	Intermediate Screw Base	1-144-1
E17	Intermediate Screw Lampholder	2-144-1
E17	Threaded "Go" Gauge for Intermediate-Screw-Based Lamps	3-144-1
E17	"Not-Go" Ring Gauge for Intermediate-Screw-Based Lamps	3-145-1
E17	Gauge for Testing Contact-Making of Intermediate-Screw-Based Lamps	3-146-1
E17	Threaded "Go" for Gauge for Intermediate-Screw Lampholders	3-149-1
E17	"Not-Go" Plug Gauge for Intermediate-Screw Lampholders	3-150-1
E17	Threaded Gauge for Testing Contact-Making of Intermediate-Screw Lampholders	3-151-1
E26	Single-Contact Medium Screw Lampholder	2-157-1
E26	–	3-157-x *

*No standard sheet has been issued for this item. The sheet number is held in reserve.

Copyright National Electrical Manufacturers Association
Provided by IHS under license with NEMA
No reproduction or networking permitted without license from IHS
Not for Resale

CONTENTS

Code	Common Name	Standard Sheet Number
E26	Threaded "Go" Gauge for Single-Contact Medium-Screw Lampholders	3-169-1
E26	"Not-Go" Plug Gauge for Medium-Screw Lampholders	3-170-1
E26	Threaded Gauge for Testing Contact-Making of Single-Contact Medium-Screw Lampholders	3-171-1
E26/E26d	Threaded "Go" Gauge for Medium-Screw-Based Lamps	3-156-1
E26/E26d	"Not-Go" Ring Gauge for Lamps Having Bases with E26 Threads	3-158-1
E26/E26d	Gauge for Testing Contact-Making of Nonskirted Medium-Screw-Based Lamps	3-165-1
E26/E26d	Threaded "Go" Gauge for Unmounted, Nonskirted Medium Screw Bases	3-159-1
E26/24	Single-Contact Medium Screw Base	1-157-1
E26/50x39	Gauge for Testing Contact-Making of Skirted	
E26/50x39	Skirted Medium Screw Base	1-159-1
E26/50x39	Threaded "Go" Gauges for Unmounted, Skirted, Medium-Screw Bases and Medium-Screw-Based Lamps	3-160-1
E26/53x39	Special Skirted Medium Screw Base	1-162-1
E26d	Double-Contact Medium Screw Base	1-158-1
E26d	Double-Contact Medium Screw Lampholder	2-158-1
E26d	Gauge with Reference Diameter of 0.520 Inch for Unmounted and Mounted Double-Contact Medium-Screw Bases	3-163-1
E26d	Gauge with Reference Diameter of 0.410 Inch for Double-Contact Medium-Screw-Based Lamps	3-164-1
	Medium-Screw-Based Lamps	3-166-1
E26d	Threaded "Go" Gauge for Double-Contact Medium-Screw Lampholders	3-174-1
E26d	Gauge for Checking Radial Position of Intermediate Contact of Double-Contact Medium-Screw Lampholders	3-175-1
E26d	Threaded Contact-Making Gauges for Testing the Relative Positions of the Contacts in Double-Contact Medium-Screw Lampholder	3-176-1
E26d	Threaded Gauge for Testing Contact-Making of Metal-Shell Paper-Lined Double-Contact Medium-Screw Lampholders	3-177-1
E26d	Threaded Gauge for Testing Contact-Making of Porcelain or Molded Double-Contact Medium-Screw Lampholders	3-178-1
E26d	Threaded Gauge for Testing Unacceptable Contact-Making in Double-Contact Medium-Screw Lampholders	3-179-1
E39	Mogul Screw Base	1-185-1
E39	Mogul Screw Base	1-185-2
E39	Mogul Screw Lampholder	2-185-1
E39	Mogul Screw Lampholder	2-185-2
E39	Threaded "Go" Gauge for Mogul-Screw-Based Lamps	3-185-1

*No standard sheet has been issued for this item. The sheet number is held in reserve.

Copyright National Electrical Manufacturers Association
Provided by IHS under license with NEMA
No reproduction or networking permitted without license from IHS
Not for Resale

CONTENTS

Code	Common Name	Standard Sheet Number
E39	Threaded "Go" Gauge for E39 Mogul Screw Based Lamps	3-185-2
E39	"Not-Go Ring Gauge for E39 Mogul-Screw-Based Lamps	3-186-2
E39	Gauge for Testing Contact Making of E39 Mogul-Screw-Based Lamps	3-187-2
E39	Threaded "Go" Gauge for Mogul-Screw Lampholders	3-190-1
E39	Threaded "Go" Gauge for E39 Mogul-Screw Lampholders	3-190-2
E39	"Not-Go" Plug Gauge for Mogul-Screw Lampholders	3-191-1
E39	"Not-Go" Plug Gauge for Mogul-Screw Lampholders	3-191-2
E39	Threaded Gauge for Testing Contact-Making of Mogul-Screw Lampholders	3-192-1
E39	Threaded Gauge for Testing Contact Making of E39 Mogul-Screw Lampholders	3-192-2
E39	Threaded Maximum Torsion Test Device for Mogul-Screw Lampholders with Shell Grip Feature	3-195-1
E39	Threaded Maximum Torsion Test Device for E39 Mogul-Screw Lampholders with Shell Grip Feature	3-195-2
E39	Threaded Minimum Torsion Test Device for Mogul-Screw Lampholders with Shell Grip Feature	3-196-1
E39	Threaded Minimum Torsion Test Device for E39 Mogul-Screw Lampholders with Shell Grip Feature	3-196-2
E39/E39d	"Not-Go" Ring Gauge for Mogul-Screw-Based Lamps and Unmounted Bases	3-186-1
E39/E39d	Gauge for Testing Contact-Making of Mogul-Screw-Based Lamps	3-187-1
E39d	Double-Contact Mogul Screw Base	1-187-1
EP39	Position-Oriented Mogul Screw Base	1-202-1
EP39	Position-Oriented Mogul Screw Lampholder	2-202-1
EP39	Threaded "Go" Gauge for Position-Oriented Mogul-Screw-Based Lamps	3-202-1
EP39	Gauge for Testing Contact-Making of Position-Oriented Mogul-Screw-Based Lamps	3-203-1
EP39	Threaded Gauge for Testing Minimum Insertion Clearance of Position-Oriented Mogul-Screw Lampholders	3-204-1
EP39	Threaded Gauge for Testing Contact-Making of Position-Oriented Mogul-Screw Lampholders	3-205-1
Fa8	Single-Pin Base	1-250-1
Fa8	Single-Pin Fluorescent Lampholder	2-250-1
Fa8	"Go" Gauge for Single-Pin Bases on Finished Lamps	3-250-1
Fa8	"Not-Go" Gauge for Single-Pin Bases on Finished Lamps	3-251-1
Fa8	"Go" and Contact-Making Gauge for Single-Pin Lampholders	3-254-1
G1.3-2.4	Subminiature Bipin Base (T3/4)	1-288-1
G1.3-3.2	Subminiature Bipin Base (T1)	1-291-1
G2.5	Subminiature Bipin Base (T1-1/4)	1-294-1
G3.2	Subminiature Bipin Base (T1-3/4)	1-297-1
G3.9	–	1-300-1
G3.9	–	2-300-1
G3.9	"Go" Gauge for G3.9-Based Lamps	3-300-1

*No standard sheet has been issued for this item. The sheet number is held in reserve.

Copyright National Electrical Manufacturers Association
Provided by IHS under license with NEMA
No reproduction or networking permitted without license from IHS
Not for Resale

CONTENTS

Code	Common Name	Standard Sheet Number
G3.9	Double-Ended "Go" Gauge for Connectors	3-303-1
G3.9	Minimum Retention Force Gauge for Contacts of Connector	3-304-1
G5	Miniature Bipin Base	1-310-1
G5	Miniature Bipin Fluorescent Lampholder	2-310-1
G5	"Go" and "Not-Go" Gauge for Miniature-Bipin Bases on Finished Lamps	3-310-1
G5	"Go" Gauges for Miniature-Bipin Lampholders	3-313-1
G5	Torsion Test Device for Miniature-Bipin Lampholders	3-314-1
G5	Double-Ended Gauge, Maximum-Length Lamp and Minimum Lampholder Spacing, for Miniature-Bipin Lampholders	3-317-1
G5	Double-Ended Gauge, Minimum-Length Lamp and Maximum Lampholder Spacing, for Miniature-Bipin Lampholders	3-318-1
G5.3	–	1-320-1
G5.3	–	2-320-1
G5.3	Gauge for G5.3-Based Lamps	3-320-1
G5.3	"Go" Gauge for Lampholders	3-326-1
GX5.3	-	1-321-1
GX5.3	-	2-321-1
GX5.3	"Go" Gauge for GX5.3-Based Lamps	3-321-1
GX5.3	"Go" Gauge for Lampholders	3-327-1
GX5.3	Dual-Pin Retention Gauges for Lampholders and Connectors	3-331-1
GX5.3	Single-Pin Retention Gauge for Lampholders and Connectors	3-333-1
GX/GY5.3	"Not-Go" Gauges for GX5.3- and GY5.3-Based Lamps	3-323-1
GY5.3	"Go" Gauge for Lampholders and Connectors	3-328-1
GY5.3	–	1-322-1
GY5.3	–	2-322-1
GY5.3	"Go" Gauge for GY5.3-Based Lamps	3-322-1
GY5.3	Dual-Pin Retention Gauges for Lampholders and Connectors	3-332-1
GY5.3	Single-Pin Retention Gauge for Lampholders and Connectors	3-334-1
G/GY6.35	–	1-340-1
G/GY6.35	–	2-340-1
G/GY6.35	"Go" Gauges for G6.35- and GY6.35-Based Lamps	3-340-1
G/GY6.35	"Go" and "Not-Go" Gauge for Base Pin Diameter	3-341-1
G/GY6.35	"Go" Gauge for Lampholders	3-345-1
G/GY6.35	Minimum Retention Force Gauge for Contacts and Lampholders	3-349-1
GZ4	[See GZ6.35]	
GZ6.35	"Go" and "Not-Go" Gauges for G6.35, GY6.35, and GZ6.35 Pin Diameter	3-341-1
GZ6.35	–	1-342-x *
GZ6.35	Base	1-342-1
GZ6.35	–	2-342-x *
GZ6.35	Connector	2-342-1

*No standard sheet has been issued for this item. The sheet number is held in reserve.

Copyright National Electrical Manufacturers Association
Provided by IHS under license with NEMA
No reproduction or networking permitted without license from IHS
Not for Resale

CONTENTS

Code	Common Name	Standard Sheet Number
GZ6.35	"Go" Gauge for Bipin Lamp Base	3-342-x *
GZ6.35	"Go" Gauge for GZ6.35 Lamp Bases	3-342-1
GZ6.35	"Go" Gauge for Connector	3-346-x *
GZ6.35	"Go" Gauge for GZ6.35 Connector	3-346-1
GZ6.35	Minimum Contact Retention Force Gauge of Connectors	3-350-x *
GZ6.35	Minimum Contact Retention Force Gauge for GZ4 and GZ6.35 Connectors	3-350-1
2G7	–	2-351-x *
2GX7	–	2-352-x *
G7.9/GX7.9	–	1-356-1
G/GX7.9	–	2-356-1
G/GX7.9	"Go" Gauges for G7.9- and GX7.9-Based Lamps	3-356-1
G/GX7.9	"Go" Gauges for Lampholders	3-359-1
G/GX7.9	Minimum Contact Retention Force Gauge for Lampholders	3-362-1
G9.5	–	1-368-1
G9.5	–	2-368-1
G9.5	"Go" Gauge for G9.5-Based Lamps	3-368-1
G9.5	"Go" Gauge for Lampholders	3-372-1
G9.5	Minimum Contact Retention Force Gauge for Lampholders	3-377-1
GY/GZ9.5	–	1-369-1
GY/GZ9.5	–	2-369-1
GY/GZ9.5	"Go" Gauges for GY9.5- and GZ9.5-Based Lamps	3-369-1
GY/GZ9.5	"Go" Gauges for Lampholders	3-373-1
GY/GZ9.5	"Not-Go" Gauge for Lampholders	3-374-1
G10q	Four-Pin Circular Fluorescent Lamp Base	1-383-1
G10q	Four-Pin Lampholder for Circular Fluorescent Lamps	2-383-1
G10q	"Go" Gauge for Four-Pin Circular Fluorescent Lamp Bases on Finished Lamps	3-383-1
G10q	Contact-Spacing Gauges for Four-Pin Lampholders for Circular Fluorescent Lamps	3-386-1
G10q	Contact Depth Gauge for Four-Pin Lampholders for Circular Fluorescent Lamps	3-387-1
2G11	–	1-393-1
2G11	Base	1-393-2
2G11	–	2-393-1
2G11	Lampholder	2-393-2
2G11	"Go" Gauge for Bases	3-393-1
2G11	"Go" Gauge for 2G11 Base for 2G11 Lampholders	3-393-2
2G11	Gauge "A" for Maximum Insertion and Withdrawal Force for Lampholders	3-396-1
2G11	Gauge "A" for Maximum Insertion and Withdrawal Force for 2G11 Lampholders	3-396-2
2G11	Gauge "B"for Maximum Insertion Force for Lampholders	3-397-1

*No standard sheet has been issued for this item. The sheet number is held in reserve.

Copyright National Electrical Manufacturers Association
Provided by IHS under license with NEMA
No reproduction or networking permitted without license from IHS
Not for Resale

CONTENTS

Code	Common Name	Standard Sheet Number
2G11	Gauge "B" for Maximum Insertion Force for 2G11 Lampholders	3-397-2
2G11	Gauge "C" for Minimum Retention Force for Lampholders	3-398-1
2G11	Gauge "C" for Minimum Retention Force for 2G11 Lampholders	3-398-2
2G11	Single-Pin Gauge "D" for Maximum Withdrawal Force on Contacts of Lampholders	3-399-1
2G11	Single-Pin Gauge "D" for Maximum Withdrawal Force on Contacts of 2G11 Lampholders	3-399-2
2G11	Single-Pin Gauge "E" for Minimum Withdrawal Force on Contacts of Lampholders	3-400-1
2G11	Single-Pin Gauge "E" for Minimum Withdrawal Force on Contacts of 2G11 Lampholders	3-400-2
G12	–	2-401-x *
G13	Medium Bipin Base	1-406-1
G13	Medium Bipin Fluorescent Lampholder	2-406-1
G13	"Go" and "Not-Go" Gauge for Medium Bipin Bases on Finished Lamps	3-406-1
G13	"Go" and "Not-Go" Gauge for Unmounted Medium Bipin Bases	3-407-1
G13	Pin Torsion Test Device for Medium Bipin Bases	3-410-1
G13	Torsion Test Device for Medium Bipin Lampholders	3-414-1
G13	Double-Ended "Go" Gauges for a Combined Pair of Medium Bipin Lampholders	3-417-1
G13	Double-Ended Gauges for Testing Contact-Making for a Combined Pair of Medium Bipin Lampholders Mounted at Maximum Spacing	3-418-1
2G13	U-Shaped Fluorescent Base	1-420-1
2G13	U-Shaped Fluorescent Lampholder	2-420-1
2G13	"Go" Gauges for Testing Insertion and Contact-Making for Lampholders	3-423-1
2G13	Gauge for Testing Contact-Making for Lampholders	3-424-1
GX16d	Mogul and Extended Mogul End-Prong Bases	1-430-1
GX16d	"Go" Gauge for Mogul and Extended Mogul End-Prong Bases	3-430-1
GX16d	Termination	1-431-1
GX16d	"Go" Gauge for Mogul End-Prong Connectors	3-433-1
G17	"Go" Gauge for G17t- and G17q-Based Lamps (Pin Arrangement No. 1)	3-439-1
G17q	"Go" Gauge for Lampholders (Pin Arrangement No. 1)	3-443-1
G17t	Tri-Pin Prefocus Base	1-439-1
G/GX17q	Four-Pin Prefocus Base	1-440-1
G/GX17q	Four-Pin Prefocus Lampholders	2-440-1
GX17q	"Go" Gauge for GX17q-Based Lamps (Pin Arrangement No. 2)	3-440-1
GX17q	"Go" Gauge for Four-Pin Prefocus Lampholders (Pin Arrangement No. 2)	3-444-1

*No standard sheet has been issued for this item. The sheet number is held in reserve.

Copyright National Electrical Manufacturers Association
Provided by IHS under license with NEMA
No reproduction or networking permitted without license from IHS
Not for Resale

CONTENTS

Code	Common Name	Standard Sheet Number
G/GX17	Two-Pin Contact-Making Gauge for Four-Pin Prefocus Lampholders	3-445-1
G/GX17	Rotation Gauge for Four-Pin Prefocus Lampholders	3-446-1
G20	Mogul-Bipin Base	1-452-1
G20	Mogul Bipin Fluorescent Lampholder	2-452-1
G20	"Go" Gauge for Mogul Bipin Bases on Finished Lamps	3-452-1
G20	"Go" Gauges for Mogul Bipin Lampholders	3-455-1
G20	Torsion Test Device for Mogul Bipin Lampholders	3-456-1
G20	Double-Ended Gauge, Maximum Length Lamp and Minimum Lampholder Spacing, for Mogul Bipin Lampholders	3-459-1
G20	Double-Ended Gauge, Minimum Length Lamp and Maximum Lampholder Spacing, for Mogul Bipin Lampholders	3-460-1
G22	Medium Bipost Base	1-466-1
G22	Medium Bipost Lampholder	2-466-1
G22	"Go" and "Not-Go" Gauge for Medium-Bipost-Based Lamps	3-466-1
G22	"Go" Gauge for Medium Bipost Lampholders	3-469-1
G23	–	1-475-1
G23	–	2-475-1
G23	"Go" and "Not-Go" Gauge for Bases on Finished Lamp	3-475-1
G23	Gauge "A" for Checking Maximum Insertion Force and Maximum Withdrawal Force in Lampholders	3-479-1
G23	Gauge "C" for Checking Minimum Retention Force in Lampholders	3-482-1
GX23	–	1-476-1
GX23	–	2-476-1
GX23	"Go" and "Not-Go" Gauge for Bases on Finished Lamp	3-476-1
GX23	Gauge "A" for Checking Maximum Insertion Force and Maximum Withdrawal Force in Lampholders	3-480-1
GX23	Gauge "C" for Checking Minimum Retention Force in Lampholders	3-483-1
G/GX23	Gauge "B" for Checking Maximum Insertion Force in Lampholders	3-481-1
G/GX23, G24, G/GX32	Single-Pin Gauge "D" for Checking Maximum Withdrawal Force of Contacts in Lampholders	3-486-1
G/GX23, G24, G/GX32	Single-Pin Gauge "E" for Checking Minimum Retention Force on Contacts in Lampholders	3-487-1
G24d/q	–	1-493-1
G24d/q	–	2-493-1
G24d/q	"Go" and "Not-Go" Gauges for Bases on Finished Lamps	3-493-1

*No standard sheet has been issued for this item. The sheet number is held in reserve.

Copyright National Electrical Manufacturers Association
Provided by IHS under license with NEMA
No reproduction or networking permitted without license from IHS
Not for Resale

CONTENTS

Code	Common Name	Standard Sheet Number
G24d/q	Plug Gauges "A" for Checking Maximum Insertion and Withdrawal Forces in Lampholders	3-494-1
G24d/q	Plug Gauges "B" for Checking Maximum Insertion Force in Lampholders	3-495-1
G24d/q	Plug Gauges "C" for Checking Minimum Retention Force in Lampholders	3-496-1
G24d/q	Plug Gauge "F" for Checking Noninterchangeability of Bases in Lampholders	3-497-1
G24d/q	"Go" Gauges "G" for Checking Key Slots in Lampholders	3-498-1
G/GX32	Single Pin Gauge "D" for Checking Maximum Withdrawal Force of Contacts in G23, GX23, G24, G32, and GX32d Lampholders	3-486-2
G/GX32	Single-Pin Gauge "E" for Checking Minimum Retention Force of Contacts in G23, GX23, G24, G32, and GX32 Lampholders	3-487-2
G/GX32	Bases	1-506-1
G/GX32	–	1-506-x *
G/GX32	–	2-506-x *
G/GX32	Lampholders	2-506-1
G/GX32	"Go" and "Not-Go" Gauges for G32 and GX32 Bases on Finished Lamps	3-506-x *
G/GX32	"Go" and "Not-Go" Gauges for G32 and GX32 Bases on Finished Lamps	3-506-1
G/GX32	Gauges "A_1" for Checking Maximum Insertion Force and Maximum Withdrawal Force in G32d and G32q Lampholders	3-507-1
G/GX32	Gauges "A_2" for Checking Maximum Insertion Force and Maximum Withdrawal Force in GX32d Lampholders	3-508-1
G/GX32	Plug Gauges "B" for Checking Maximum Insertion Force in G32 and GX32 Lampholder	3-509-x *
G/GX32	Gauges "B" for Checking Maximum Insertion Force in G32d, G32q, and GX32d Lampholders	3-509-1
G/GX32	Plug Gauges "C" for Checking Maximum Insertion Force in G32 and GX32 Lampholder	3-510-x *
G/GX32	Gauge "C" for Checking Minimum Retention Force in G32d, G32q, and GX32d Lampholders	3-510-1
G/GX32	"Not-Go" Gauges "F" for Checking Non-Interchangeability of G32d, G32q, and GX32d Bases in Lampholders	3-511-1
G/GX32	"Go" Gauges "G" for Checking Key Slots in G32d, G32q, and GX32d Lampholders	3-512-1
GX32	Plug Gauge "A_1" for Checking Maximum Insertion and Withdrawal Forces in GX32 Lampholder	3-507-x*
GX32	Plug Gauge "A_2" for Checking Maximum Insertion and Withdrawal Forces in GX32 Lampholder	3-508-x *
G38	Mogul Bipost Base	1-519-1
G38	Mogul Bipost Lampholder	2-519-1
G38	"Go" Gauge for Mogul Bipost-Based Lamps	3-519-1
G38	"Go" and "Not-Go" Gauge for Posts of Mogul Bipost-Based Lamps	3-520-1

*No standard sheet has been issued for this item. The sheet number is held in reserve.

Copyright National Electrical Manufacturers Association
Provided by IHS under license with NEMA
No reproduction or networking permitted without license from IHS
Not for Resale

CONTENTS

Code	Common Name	Standard Sheet Number
G38	"Go" Gauge for Mogul Bipost Lampholders	3-523-1
P8.25	–	2-530-x *
P11.5	–	2-535-x *
PG12	–	2-545-x *
P12.4	–	2-555-x *
P13.5s	Single-Contact Miniature Flanged Base	1-600-1
P28	Medium Prefocus Base	1-700-1
P28	Medium Prefocus Lampholder	2-700-1
P28	"Go" Gauge for Medium Prefocus-Based Lamps	3-700-x *
P28	"Go" Gauge for Medium Prefocus Lampholders	3-703-x *
P30	Candelabra Prefocus Base	1-709-1
P30	Candelabra Prefocus Lampholders	2-709-1
P30	"Go" and "Not-Go" Gauge for Diameter of Collar on Prefocus Bases on Finished Lamps	3-709-1
P40	Mogul Prefocus Base	1-715-1
P40	Mogul Prefocus Lampholder	2-715-1
P40	"Go" Gauge for Mogul Prefocus-Based Lamps and for Unmounted Bases	3-715-1
P40	"Go" Gauge for Mogul Prefocus Lampholders	3-718-1
R7s	Recessed Single-Contact Base	1-770-1
R7s	Recessed Single-Contact Lampholder	2-770-1
R7s	"Go" Gauge for Recessed Single-Contact Lampholders at Minimum Spacing	3-770-1
R7s	"Go" and "Not-Go" Gauge for Recessed Double-Contact Bases on Finished Lamps	3-771-x *
R12.5	–	1-774-x *
R12.5	–	2-774-x *
R17d	Recessed Double-Contact Base	1-777-1
R17d	Recessed Double-Contact Lampholder	2-777-1
R17d	"Go" and "Not-Go" Gauge for Recessed Double-Contact Bases on Finished Lamps	3-777-1
R17d	"Go" Gauge for Recessed Double-Contact Lampholders	3-780-1
R17d	Contact-Making Gauge for Recessed Double-Contact Lampholders	3-781-1
R17d	Double-Ended "Go" Gauge, Maximum Length Lamp and Minimum Lampholder Spacing, for Recessed Double-Contact Lampholders	3-784-1
R17d	Double-Ended "Go" Gauge, Minimum-Length Lamp and Maximum Lampholder Spacing, for Recessed Double-Contact Lampholders	3-785-1
SX4	Submidget Flanged Base	1-850-1
SX4	Submidget Flanged Lampholder	2-850-1
SX4	"Go" Ring Gauge for Submidget-Flanged-Based Lamps	3-850-1
SX4	"Not-Go" Ring Gauge for Submidget-Flanged-Based Lamps	3-851-1
S5.7	Midget Grooved Base	1-856-1
SX6	Midget Flanged Base	1-862-1
T7.2-1	Telephone Slide Base No. 1	1-875-1

*No standard sheet has been issued for this item. The sheet number is held in reserve.

Copyright National Electrical Manufacturers Association
Provided by IHS under license with NEMA
No reproduction or networking permitted without license from IHS
Not for Resale

CONTENTS

Code	Common Name	Standard Sheet Number
T7.2-2	Telephone Slide Base No. 2	1-876-1
T7.2-3	Telephone Slide Base No. 3	1-877-1
T7.2-5	Telephone Slide Base No. 5	1-878-1
T7.2-6	Telephone Slide Base No. 6	1-879-1
T7.2-7	Telephone Slide Base No. 7	1-880-1
T7.2-8	Telephone Slide Base No. 8	1-881-1
W2.5x16	–	2-890-x *
–	Fluorescent Lamp Starter Holder	2-900-1
Starter Holders	"Go" Gauges for Fluorescent Lamp Starter Holders	3-900-1
Starter Holders	Contact-Making and Retention Force Gauge for Fluorescent Lamp Starter Holders	3-901-1

Annex

A Former designations of C81 Standards

*No standard sheet has been issued for this item. The sheet number is held in reserve.

Copyright National Electrical Manufacturers Association
Provided by IHS under license with NEMA
No reproduction or networking permitted without license from IHS
Not for Resale

Copyright National Electrical Manufacturers Association
Provided by IHS under license with NEMA
No reproduction or networking permitted without license from IHS

Not for Resale

CONTENTS

Base	Common Name	Standard Sheet Number
G13	"Go" and "Not-Go" Gauge for G13 Medium Bipin Bases on Finished Lamps	3-406-2
G5/G13	"Go" and "Not-Go" Gauge for Unmounted G5 and G13 Medium Bipin Bases	3-407-2
G13	Double-Ended "Go" Gauges for a Combined Pair of G13 Medium Bipin Lampholders Mounted at Minimum Spacing	3-417-2
G13	Double-Ended Gauges for Testing Contact Making for a Combined Pair of G13 MediumBipin Lampholders Mounted at Maximum Spacing	3-418-2
GX32	Single Pin Gauge "D" for Checking Maximum Withdrawal Force of Contacts in 2G7, 2GX7, 2G11, G23, GX23 and GX32 Lampholders	3-486-3
GX32	Single Pin Gauge "E" for Checking Minimum Withdrawal Force of Contacts in 2G7, 2GX7, 2G11, G23, GX23 and GX32 Lampholders	3-487-3
GX32	G23, GX23, and GX32 Lampholders "Go" and "Not Go" Gauges for G32 and GX32 Bases on Finished Lamps	3-506-2
G32d/G32q	Gauges "A1" for Checking Maximum Insertion Force and Maximum Withdrawal Force in G32d and G32q Lampholders	3-507-2
G32d/G32q	Gauges "A2" for Checking Maximum Insertion Force and Maximum Withdrawal Force in G32d and G32q Lampholders	3-508-2
G32d/G32q	Gauge "B" for Checking Maximum Insertion Force in G32d, G32q, GX32d and GX32q Lampholders	3-509-2
G32d/G32q	Gauge "C" for Checking Minimum Insertion Force in G32d, G32q, GX32d and GX32q Lampholders	3-510-2
G32d/G32q	Non-Interchangeability of G32d, G32q, GX32d and GX32q Bases in Lampholders	3-511-2
G32d/G32q	"Go" Gauges "G" for Checking Key Slots in G32d, G32q, GX32d and GX32q	3-512-2

Copyright National Electrical Manufacturers Association
Provided by IHS under license with NEMA
No reproduction or networking permitted without license from IHS
Not for Resale

Old Standard Sheet	Code Name	Replace with Standard Sheet	Approved
3-406-1	G13	3-406-2	10-10/94
3-407-1	G5/G13	3-407-2	10-10/94
3-417-1	G13	3-417-2	10-10/94
3-418-1	G13	3-418-2	10-10/94
3-486-2	GX32	3-486-1	10-10/94
3-487-2	GX32	3-486-1	10-10/94
3-506-1	GX32	3-506-2	10-10/94
3-507-1	G32d/G32q	3-507-2	10-10/94
3-508-1	G32d/G32q	3-508-2	10-10/94
3-509-1	G32d/G32q	3-509-2	10-10/94
3-510-1	G32d/G32q	3-510-2	10-10/94
3-511-1	G32d/G32q	3-511-2	10-10/94
3-512-1	G32d/G32q	3-512-2	10-10/94

Copyright National Electrical Manufacturers Association
Provided by IHS under license with NEMA
No reproduction or networking permitted without license from IHS
Not for Resale

NEMA C81.63A 93 ■ 6470247 0507767 467 ■

ANSI C81.63a-1993
Supplement to ANSI C81.63-1991

American National Standard

Supplement to C81.63-1991 and
partial revision and consolidation
of ANSI C81.10-1976, C81.20-1976,
C81.30-1976, C81.40-1976, and C81.50-1976

Approved May 14, 1993 | Secretariat: National Electrical Manufacturers Association

This publication replaces C81.55-1989, never published.

CONTENTS

See next page for Table of Contents

An American National Standard implies a consensus of those substantially concerned with its scope and provisions. An American National Standard is intended as a guide to aid the manufacturer, the consumer, and the general public. The existence of an American National Standard does not in any respect preclude anyone,whether he has approved the standard or not, from manufacturing, marketing, purchasing, or using products, processes, or procedures not conforming to the standard. American National Standards are subject to periodic review and users are cautioned to obtain the latest editions.

The American National Standards Institute does not develop standards and will in no circumstances give an interpretation of any American National Standard. Moreover, no person shall have right or authority to issue an interpretation of an American National Standard in the name of the American National Standards Institute.

Caution Notice: This American National Standard may be revised or withdrawn at any time. The procedures of the American National Standards Institute require that action be taken to reaffirm, revise, or withdraw this standard no later than five years from the date of approval. Purchasers of American National Standards may receive current information on all standards by calling or writing the American National Standards Institute.

Copyright ©1993 by National Electrical Manufacturers Association, 2101 L Street, N.W., Washington, D.C. 20037

Copyright National Electrical Manufacturers Association
Provided by IHS under license with NEMA
No reproduction or networking permitted without license from IHS

Not for Resale

CONTENTS

Code	Common Name	Standard Sheet Number
BY22d	"Not-go" Gauge for BY22d Bases on Finished Lamps	3-30-1
	"Go" Gauge for BY22d Bases on Finished Lamps	3-31-1
	Gauge for Testing the Insertion of BY22d Bases in Lampholders	3-32-1
	Plug Gauge for BY22d Lampholders	3-33-1
	Gauge for Checking Contact Position and Contact Force in BY22d Lampholders	3-34-1
	Gauge for Checking Slot Width of BY22d Lampholders	3-35-1
	Supplementary "Go" Gauge for BY22d Lampholders	3-36-1
E12	Threaded "Go" Gauge for E12 Candelabra Screw Based Lamps	3-130-2
	"Go" Ring Gauge for E12 Candelabra Screw Based Lamps	3-131-1
	"Not-go" Ring Gauge for E12 Candelabra Screw Based Lamps	3-132-2
	Gauge for Testing Contact Making of E12 Candelabra Screw Based Lamps	3-133-2
	Threaded "Go" Gauge for E12 Candelabra Screw Lampholders	3-136-2
	"Not-go" Plug Gauge for E12 Candelabra Screw Lampholders	3-137-2
	Threaded Gauge for Testing Contact Making of E12 Candelabra Screw Lampholder	3-138-2
E39	Threaded "Go" Gauge for E39 Mogul Screw Based Lamps	3-185-2
	"Not-go" Ring Gauge for E39 Mogul Screw Based Lamps Based Lamps	3-186-2
	Gauge for Testing Contact Making of E39 Mogul Screw Based Lamps	3-187-2
	Threaded "Go" Gauge for E39 Mogul Screw Lampholders	3-190-2
	"Not-go" Plug Gauge for E39 Mogul Screw Lampholders	3-191-2
	Threaded Gauge for Testing Contact Making of E39 Mogul Screw Lampholders	3-192-2
	Threaded Maximum Torsion Test Device for E39 Mogul Screw Lampholders with Shell Grip Feature	3-195-2
	Threaded Minimum Torsion Test Device for E39 Mogul Screw Lampholders with Shell Grip Feature	3-196-2
2G11	"Go" Gauge for 2G11 Base for 2G11 Lampholders	3-393-2
	Gauge "A" for Maximum Insertion and Withdrawal Force for 2G11 Lampholders	3-396-2
	Gauge "B" for Maximum Insertion Force for 2G11 Lampholders	3-397-2
	Gauge "C" for Minimum Retention Force for 2G11 Lampholders	3-398-2
	Single Pin Gauge "D" for Maximum Withdrawal Force on Contacts of 2G11 Lampholders	3-399-2
	Single Pin Gauge "E" for Minimum Withdrawal Force on Contacts of 2G11 Lampholders	3-400-2

Copyright National Electrical Manufacturers Association
Provided by IHS under license with NEMA
No reproduction or networking permitted without license from IHS

Not for Resale

Code	Common Name	Standard Sheet Number
G/GX32	"Go" and "Not-go" Gauges for G32 and GX32 Bases on Finished Lamps	3-506-1
	Gauges "A_1" for Checking Maximum Insertion Force and Maximum Withdrawal Force in G32d and G32q Lampholders	3-507-1
	Gauges "A_2" for Checking Maximum Insertion Force and Maximum Withdrawal Force in GX32d Lampholders	3-508-1
	Gauges "B" for Checking Maximum Insertion Force in G32d, G32q, and GX32d Lampholders	3-509-1
	Gauge "C" for Checking Minimum Retention Force in G32d, G32q, and GX32d Lampholders	3-510-1
	"Not-go" Gauges "F" for Checking Non-Interchangeability of G32d, G32q, and GX32d Bases in Lampholders	3-511-1
	"Go" Gauges "G" for Checking Key Slots in G32d, G32q, and GX32d Lampholders	3-512-1
	Single Pin Gauge "D" for Checking Maximum Withdrawal Force of Contacts in G23, GX23, G24, G32, and GX32d Lampholders	3-486-2
	Single Pin Gauge "E" for Checking Minimum Retention Force of Contacts in G23, GX23, G24, G32, and GX32 Lampholders	3-487-2
GZ6.35	"Go" and "Not-go" Gauges for G6.35, GY6.35, and GZ6.35 Pin Diameter	3-341-1
	"Go" Gauge for GZ6.35 Lamp Bases	3-342-1
	"Go" Gauge for GZ6.35 Connector	3-346-1
	Minimum Contact Retention Force Gauge for GZ4 and GZ6.35 Connectors	3-350-1

Copyright National Electrical Manufacturers Association
Provided by IHS under license with NEMA
No reproduction or networking permitted without license from IHS
Not for Resale

ANSI C81.63 91 ■ 0724150 0504371 55T ■

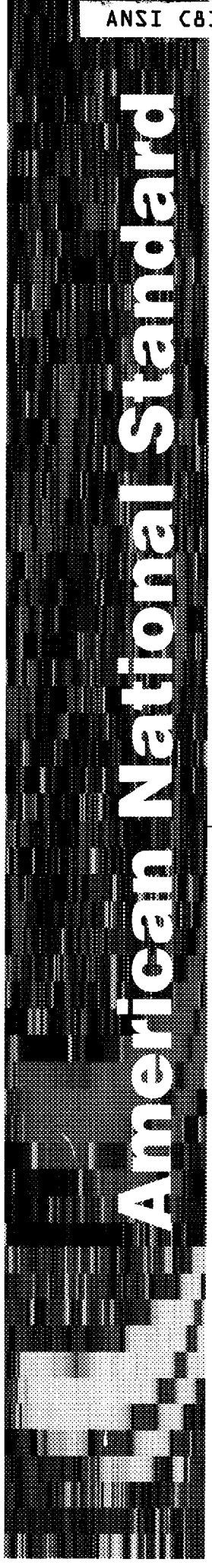

for Gauges for Electric Lamp Bases and Lampholders

ANSI C81.63-1991

ANSI American National Standards Institute
11 West 42nd Street
New York, New York
10036

Copyright National Electrical Manufacturers Association
Provided by IHS under license with NEMA
No reproduction or networking permitted without license from IHS
Not for Resale

ANSI®
C81.63-1991
Partial revision and consolidation of
ANSI C81.10-1976, C81.20-1976,
C81.30-1976, C81.40-1976,
and C81.50-1976

American National Standard for Gauges for Electrical Lamp Bases and Lampholders

Secretariat

National Electrical Manufacturers Association

Approved October 18, 1991

American National Standards Institute, Inc.

Copyright National Electrical Manufacturers Association
Provided by IHS under license with NEMA
No reproduction or networking permitted without license from IHS
Not for Resale

American National Standard

Approval of an American National Standard requires verification by ANSI that the requirements for due process, consensus, and other criteria for approval have been met by the standards developer.

Consensus is established when, in the judgment of the ANSI Board of Standards Review, substantial agreement has been reached by directly and materially affected interests. Substantial agreement means much more than a simple majority, but not necessarily unanimity. Consensus requires that all views and objections be considered, and that a concerted effort be made toward their resolution.

The use of American National Standards is completely voluntary; their existence does not in any respect preclude anyone, whether he has approved the standards or not, from manufacturing, marketing, purchasing, or using products, processes, or procedures not conforming to the standards.

The American National Standards Institute does not develop standards and will in no circumstances give an interpretation of any American National Standard. Moreover, no person shall have the right or authority to issue an interpretation of an American National Standard in the name of the American National Standards Institute. Requests for interpretations should be addressed to the secretariat or sponsor whose name appears on the title page of this standard.

CAUTION NOTICE: This American National Standard may be revised or withdrawn at any time. The procedures of the American National Standards Institute require that action be taken periodically to reaffirm, revise, or withdraw this standard. Purchasers of American National Standards may receive current information on all standards by calling or writing the American National Standards Institute.

Published by

American National Standards Institute
11 West 42nd Street, New York, New York 10036

Copyright © 1992 by American National Standards Institute
All rights reserved.

No part of this publication may be reproduced in any form, in an electronic retrieval system or otherwise, without prior written permission of the publisher.

Printed in the United States of America

ANSI1.5C1092/220

Copyright National Electrical Manufacturers Association
Provided by IHS under license with NEMA
No reproduction or networking permitted without license from IHS
Not for Resale

Foreword

(This Foreword is not part of American National Standard C81.63-1991.)

ANSI C81.63-1991 was a new presentation of the standard sheets of gauges for electric lamp bases and lampholders. This standard does not contain any sheets for base or lampholders.

This arrangement is a major departure from the previous standards in the C81 series. A primary feature of this new format is that all the new gauge sheets are concentrated in one standard. Secondly, the general format of the sheets has been revised to offer better associations among related bases, lampholders, and gauges. Also, on the ANSI sheets, test requirements are now located on the products sheets (base sheet or holder sheet) to which they apply, as opposed to being located on the gauge sheets as is done in IEC.

A standard in the old series of standards (ANSI C81.10, ANSI C81.20, and so on) contained the standard sheets for a certain category of bases along with their associated holders and gauges. Under the new approach, base sheets are in ANSI C81.61-1990, holders in another standard (ANSI C81.62-1991), and gauges in a third standard (ANSI C81.63-1991). In addition, a fourth standard (ANSI C81.64-1993) contains detailed information on designations, threads, gauging tolerances etc. This pattern is similar to the organization of the IEC standards for base and holder systems.

Under this new scheme, ANSI C81.61-1990, ANSI C81.62-1991 and ANSI C81.63-1991, have replaced the old standards. Therefore, the old standards have been withdrawn.

With this issue in the new format, the titles of the data sheets show new names for the bases. These names are generally a combination of an IEC designation and a common name. It is assumed that a transition phase, of several years duration, in which both kinds of identification are shown will help familiarize users with the IEC designations. Eventually, it is expected that use of IEC designations will be sufficient. New fits, for which common names have never been assigned, bear only their IEC designations.

The new gauge standard sheets in this document are generally not changed technically from older versions. However, some work being processed by the C81 subcommittees has been merged into the new standard. Also, some new base types have been added.

With the issuance of this supplement, C81.63g, a major change has taken place. IEC standards which are fully harmonized with their ANSI equivalents have been adopted as American National Standards and replace the old ANSI standard sheets. While the ANSI/IEC sheets have a different system of sheet numbering, they are filed in alphanumeric sequence of IEC designation with the remaining ANSI standard sheets. The Annex contains a cross-reference, relating the new ANSI sheet numbers and ANSI/IEC sheet numbers to the old (withdrawn) system.

The ANSI/IEC standard sheets are taken from IEC 61-3. The drawings on these internationally standardized sheets are in first angle projection rather than third angle commonly used in North American approved standard sheets. Annex B explains the difference between the two systems. In addition, the common American term "Base" is internationally known as "cap." Internationally the decimal point (.) is not used in dimensions, rather a comma (,) separates a decimal number e.g. 4,5 rather than 4.5. However, in the designation of a fit the decimal point is used e.g. GY6.35.
This standard contains an annex which is informative and is not considered a part of this standard.

Suggestions for improvement of this standard will be welcome. They shall be sent to the National Electrical Manufacturers Association, 1300 North 17th St., Suite 1847, Rosslyn, VA 22209.

Copyright National Electrical Manufacturers Association
Provided by IHS under license with NEMA
No reproduction or networking permitted without license from IHS
Not for Resale

ANSI C81.63g-1996
Supplement to ANSI C81.63-1991

This standard was processed and approved for submittal by Accredited Standards Committee on Electrical Lamp Bases and Holders, C81, and Sub-Committees C81-1 for Specialty-Use Bases and Holders, C81-5 for Fluorescent Lamp Bases and Holders, C81-10 for General Use Lamp Bases and Holders, and C81-11 for Bases and Holders for Photo Lamps. Committee approval of the standard does not necessarily imply that all committee members voted for its approval. At the time of publication of this standard, the Committees had the following members:

Charles Chase, Chairman C81
Randolph N. Roy, Secretariat
Jeanne L. Spicer, Coordinating Editor

Organizations Represented	*Name of Representative*
Duro-Test Corporation	Larry Sheinberg
General Electric Lighting	John P. Krissinger
Leviton Manufacturing Company	Charles Chase
National Electrical Manufacturers Association	Dennis Oddsen (delegate)
OSRAM SYLVANIA INC	Peter Bleasby
Philips Lighting	Al Rousseau

John Forish, Chairman C81-1
Richard Fleegal, Chairman C81-10
Randolph N. Roy, Secretariat

Charles Chase, Chairman C81-5
David H. Fox, Chairman C81-11

Organizations Represented	*Name of Representative*
Eastman Kodak Company	William E Moore
Ford Motor Company	Roman Witek
General Electric Company	Don Kikta
	Fred Hetzel
GE Lighting Company	Bernard W. Rachel
	John P. Krissinger
Leviton Manufacturing Company	Charles Chase
	Aaron Chase
	Anthony Tufano
Micro Lamps, Inc.	Thomas Knopp
OSRAM SYLVANIA, INC.	Richard Fleegal
	David H. Fox
	Gary Cunkleman
	David T. Mullen
	Jeff Buschmann
Philips Lighting, Inc.	Al Rousseau
	M. M. Mujahid
	Eep Peuchen
	Richard Scott
Underwriters Laboratories, Inc.	Anthony Tassone
Zanxx, Inc.	John Forish

Copyright National Electrical Manufacturers Association
Provided by IHS under license with NEMA
No reproduction or networking permitted without license from IHS
Not for Resale

Universal Contents of C81.63
Gauges for Electric Lamp Bases and Lampholders

System	Title	Std. Sheet No.	Published In
BA9	"Go" Gauge for Miniature Bayonet-Based Lamps	3-10-1	C81.63-91
BA9	"Not-Go" Gauge for Miniature-Based Lamps	3-11-1	C81.63-91
BA9	"Go" and "Not-Go" Plug Gauges for Miniature-Based Lampholders	3-14-1	C81.63-91
BA9,	Lampholder Minimum & Maximum Retention Gauge	3-15-1	C81.63z-98
BA9, B15, B22, BY22d	"Not-Go" Gauges for Caps on Finished Lamps	7006-10-8	C81.63v-00
BA15	"Go" Gauge for Candelabra-Bayonet-Based Lamps	3-20-2	C81.63k-97
BA15	"Not-Go" Gauge for Candelabra-Bayonet-Based Lamps	3-21-2	C81.63-91
BA15	"Go" and "Not-Go" Plug Gauges for Candelabra-Bayonet Lampholders	3-24-1	C81-63-91
B15d, B22d, BY22d	Gauges for Testing the Insertion of Caps in Lampholders	7006-4A-2	C81.63v-00
B15d, B22d, B22d-3, By22d	Gauges for the Slots in Lampholders	7006-13-5	C81.63v-00
B22d, BY22d	Supplementary "Go" Gauges for Lampholders	7006-12A-2	C81.63v-00
B22d, BY22d	Gauges for Checking Contact Position and Contact Force in Bayonet Lampholders	7006-15A-2	C81.63v-00
BY22d	"Go" Gauge for Caps on Finished Lamps	7006-17A-1	C81.63v-00
BY22d	Plug Gauge for Lampholders	7006-17B-1	C81.63v-00
E5	Threaded "Go" Gauge for Midget Screw-Based Lamps	3-100-1	C81.63-91
E5	"Not-Go" Gauge for Midget Screw-Based Lamps	3-101-1	C81.63-91
E5	Threaded "Go" Gauge for Midget Screw Lampholders	3-104-1	C81.63-91
E5	"Not-Go" Plug Gauge for Midget Screw Lampholders	3-105-1	C81.63-91
E10	"Not-Go" Ring Gauge for Miniature Screw-Based Lamps & Unmounted Bases	3-111-2	C81.63p-97
E10	Threaded Gauge for Testing Contact-Making of Miniature Screw-Based Lamps	3-112-1	C81.63-91
E10	Threaded "Go" Gauge for Miniature-Screw Lampholders	3-115-1	C81.63-91
E10	"Not-Go" Plug Gauge for Miniature-Screw Lampholders	3-116-1	C81.63-91
E10	Threaded Gauge for Testing Contact-Making of Miniature-Screw Lampholders	3-117-1	C81.63-91
E11	Threaded "Go" Gauge for Mini-Can Screw-Based Lamps & Unmounted Bases	3-123-2	C81.63f-96
E11	"Go" and Contact-Making Gauge "B" for Mini-Can Screw Lampholders	3-124-2	C81.63f-96
E11	"Go" and Contact-Making Gauge "A" for Mini-Can Screw Lampholders	3-125-2	C81.63f-96
E12	Threaded "Go" Gauge for Candelabra Screw-Based Lamps	3-130-2	C81.63a-93
E12	"Go" Ring Gauge for Candelabra Screw-Based Lamps	3-131-1	C81.63a-93
E12	"Not-Go" Ring Gauge for Candelabra Screw-Based Lamps	3-132-2	C81.63a-93
E12	Gauge for Testing Contact-Making of Candelabra Screw-Based Lamps	3-133-2	C81.63a-93
E12	Threaded "Go" Gauge for Candelabra Screw Lampholders	3-136-2	C81.63a-93

Copyright National Electrical Manufacturers Association
Provided by IHS under license with NEMA
No reproduction or networking permitted without license from IHS
Not for Resale

Universal Contents of C81.63
Gauges for Electric Lamp Bases and Lampholders

System	Title	Std. Sheet No.	Published In
E12	"Not-Go" Plug Gauge for Candelabra Screw Lampholders	3-137-2	C81.63a-93
E12	Threaded Gauge for Testing Contact-Making of Candelabra Screw Lampholders	3-138-2	C81.63a-93
E17	Threaded "Go" Gauge for Intermediate Screw-Based Lamps	3-144-2	C81.63f-96
E17	"Not-Go" Ring Gauge for Intermediate Screw-Based Lamps	3-145-2	C81.63f-96
E17	Gauge for Testing Contact-Making of Intermediate Screw-based Lamps	3-146-1	C81.63-91
E17	Threaded "Go" Gauge for Intermediate Screw Lampholders	3-149-2	C81.63f-96
E17	"Not-Go" Plug Gauge for Intermediate Screw Lampholders	3-150-2	C81.63f-96
E17	Threaded Gauge for Testing Contact-Making of Intermediate Screw Lampholders	3-151-2	C81.63f-96
E26	Threaded "Go" Gauge for Medium Screw-Based Lamps	3-156-1	C81.63-91
E26	"Not-Go" Ring Gauge for Lamps Having Bases with E26 Threads	3-158-1	C81.63-91
E26	Threaded "Go" Gauge for Unmounted, Nonskirted Medium-Screw Bases	3-159-1	C81.63-91
E26/50x39 & E26/53x39	Threaded "Go" Gauges for Unmounted, Skirted Medium-Screw Bases and Medium [Skirted] Screw-Based Lamps	3-160-1	C81.63-91
E26d	Gauge with Reference Diameter of 0.520 Inch for Unmounted and Mounted Double-Contact Medium-Screw Bases	3-163-1	C81.63-91
E26d	Gauge with Reference Diameter of 0.410 Inch for Double-Contact Medium Screw-Based Lamps	3-164-1	C81.63-91
E26	Gauge for Testing Contact-Making of Nonskirted Medium Screw-Based Lamps	3-165-1	C81.63-91
E26/50x39	Gauge for Testing Contact-Making of Skirted Medium Screw-Based Lamps	3-166-1	C81.63-91
E26	Threaded "Go" Gauge for Single-Contact Medium-Screw Lampholders	3-169-1	C81.63-91
E26	"Not-Go" Plug Gauge for Medium-Screw Lampholders	3-170-1	C81.63-91
E26	Threaded Gauge for Testing Contact-Making of Single-Contact Medium-Screw Lampholders	3-171-1	C81.63-91
E26d	Threaded "Go" Gauge for Double-Contact Medium-Screw Lampholders	3-174-1	C81.63-91
E26d	Gauges for Checking Radial Position of Intermediate Contact of Double-Contact Medium-Screw Lampholders	3-175-1	C81.63-91
E26d	Threaded Contact-Making Gauges for Testing the Relative Positions of the Contacts in Double-Contact Medium-Screw Lampholders	3-176-1	C81.63-91
E26d	Threaded Gauge for Testing Contact-Making of Metal-Shell, Paper-Lined Double-Contact Medium-Screw Lampholders	3-177-1	C81.63-91
E26d	Threaded Gauge for Testing Contact-Making of Porcelain or Molded Double-Contact Medium-Screw Lampholders	3-178-1	C81.63-91
E26d	Threaded Gauge for Testing Unacceptable Contact-Making in Double-Contact Medium-Screw Lampholders	3-179-1	C81.63-91
E39	Gauge for Finished Lamps Fitted With E39 Caps for Testing Contact-Making	7006-24A-1	C81.63g-97
E39	"Go" Gauge for Caps on Finished Lamps	7006-24B-1	C81.63g-97
E39	"Not-Go" Gauge for Caps on Finished Lamps	7006-24C-1	C81.63g-97

Copyright National Electrical Manufacturers Association
Provided by IHS under license with NEMA
No reproduction or networking permitted without license from IHS
Not for Resale

Universal Contents of C81.63
Gauges for Electric Lamp Bases and Lampholders

System	Title	Std. Sheet No.	Published In
E39	Gauge for Testing Protection Against Bulb-Neck Damage and for Testing Contact-Making in Lampholders	7006-24D-1	C81.63g-97
E39	"Go" Gauge for Screw Thread of Lampholders	7006-24E-1	C81.63g-97
E39	Gauge for Testing Maximum Insertion Torque in Lampholders with Shell-grip Features	7006-24F-1	C81.63g-97
E39	Gauge for Testing Minimum Insertion Torque in Lampholders with Shell-grip Features	7006-24G--1	C81.63g-97
E39	"Not-Go" Plug Gauge for Mogul Screw Lampholders	3-191-2	C81.63a-93
EP39	Threaded "Go" Gauge for Position-Oriented Mogul Screw-Based Lamps	3-202-1	C81.63-91
EP39	Gauge for Testing Contact-Making of Position-Oriented Mogul Screw-Based Lamps	3-203-1	C81.63-91
EP39	Threaded Gauge for Testing Minimum Insertion Clearance of Position-Oriented Mogul-Screw Lampholders	3-204-1	C81.63-91
EP39	Threaded Gauge for Testing Contact-Making of Position-Oriented Mogul-Screw Lampholders	3-205-1	C81.63-91
Fa8	"Go" Gauge for Single-Pin Bases on Finished Lamps	3-250-1	C81.63-91
Fa8	"Not-Go" Gauge for Single-Pin Bases on Finished Lamps	3-251-1	C81.63-91
Fa8	"Go" and Contact-Making Gauge for Single-Pin Lampholders	3-254-1	C81.63-91
G3.9	"Go" Gauge for Based Lamps	3-300-1	C81.63-91
G3.9	Double-Ended "Go" Gauge for Connectors	3-303-1	C81.63-91
G3.9	Minimum Retention Force Gauge for Contact of Connectors	3-304-1	C81.63-91
GU4	"Go" and "Not-Go" Gauge for Bi-Pin Bases	7006-108-2	C81.63w-98
GU4	Gauges for Checking Maximum Insertion Force and Maximum Withdrawal Force in Lampholders	7006-108A-1	C81.63g-97
GU4	Gauges for Checking the Minimum Retention Force in Lampholders	7006-108B-1	C81.63g-97
GU4	"Go" Gauge for Lampholders	7006-108C-1	C81.63g-97
GU4/GZ4	Single Pin Gauge for Checking Contact Making in Lampholders	7006-108D-1	C81.63g-97
GZ4	Min. Contact Retention Force for Connector [See GZ6.35 - 3-350-1]		
GZ4	"Go" Gauge for Bi-Pin Lamp Bases	7006-67-1	C81.63x-00
GZ4	"Go" Gauge for Connector for Bi-Pin Lamp Base	7006-67A-1	C81.61x-00
G5	"Go" and "Not-Go" Gauge for Miniature-Bi-Pin Bases on Finished Lamps	3-310-1	C81.63-91
G5	Pin Torsion Test Device for Miniature Bi-Pin Base	3-311-1	C81.63e-96
G5	"Go" Gauges for Miniature-Bi-Pin Lampholders	3-313-1	C81.63-91
G5	Torsion Test Devices for Miniature Bi-Pin Lampholders	3-314-2	C81.63e-96
G5	Double-Ended Gauge Maximum-Length Lamp and Minimum Lampholder Spacing for Miniature-Bi-Pin Lampholders	3-317-1	C81.63-91
G5	Double-Ended Gauge, Minimum-Length Lamp and Maximum Lampholder Spacing for Miniature-Bi-Pin Lampholders	3-318-1	C81.63-91
G5.3	Gauge for Based Lamps	3-320-1	C81.63-91
G5.3	"Go" Gauge for Lampholders	3-326-1	C81.63-91

Copyright National Electrical Manufacturers Association
Provided by IHS under license with NEMA
No reproduction or networking permitted without license from IHS
Not for Resale

Universal Contents of C81.63
Gauges for Electric Lamp Bases and Lampholders

System	Title	Std. Sheet No.	Published In
GU5.3	"Go" and "Not Go" Gauge for Bi-Pin Bases	7006-109-1	C81.63g-97
GU5.3	Gauges for Checking Maximum Insertion and Maximum Withdrawal Force in Lampholder	7006-109A-1	C81.63g-97
GU5.3	Gauges for Checking Minimum Retention Force in Lampholders	7006-109B-1	C81.63g-97
GU5.3	"Go" Gauge for Lampholders	7006-109C-1	C81.63g-97
GX5.3	"Go" Gauge for Based Lamps	3-321-1	C81.63-91
GX/GY5.3	"Not-Go" Gauges for Based Lamps	3-323-1	C81.63-91
GX5.3	"Go" Gauge for Lampholders	3-327-1	C81.63-91
GX5.3	Dual-Pin Retention Gauges for Lampholders and Connectors	3-331-1	C81.63-91
GX5.3	Single-Pin Retention Gauge for Lampholders and Connectors	3-333-1	C81.63-91
GY5.3	"Go" Gauge for Based Lamps	3-322-1	C81.63-91
GY5.3	"Go" Gauge for Lampholders and Connectors	3-328-1	C81.63-91
GY5.3	Dual-Pin Retention Gauges for Lampholders and Connectors	3-332-1	C81.63-91
GY5.3	Single-Pin Retention Gauge for Lampholders and Connectors	3-334-1	C81.63-91
G/GY6.35	"Go" Gauges for Based Lamps	3-340-1	C81.63-91
G/GY/GZ6.35	"Go" and "Not-Go" Gauges for Pin Diameter	3-341-1	C81.63a-93
G/GY6.35	"Go" Gauge for Lampholders	3-345-1	C81.63-91
G/GY6.35	Minimum Retention Force Gauge for Contacts of Lampholders	3-349-1	C81.63-91
GZ6.35	"Go" Gauge for Lamp Base	3-342-1	C81.63a-93
GZ6.35	"Go" Gauge for Connector	3-346-1	C81.63a-93
GZ6.35/GZ4	Minimum Contact Retention Force Gauge for GZ4 and GZ6.35 Connectors	3-350-1	C81.63a-93
2G/GX7	"Go" and "Not-Go" Gauge for Caps on Finished Lamps	7006-102-1	C81.63g-97
2G7	Gauge "A" for Checking Maximum Insertion Force and Maximum Withdrawal Force in Lampholders	7006-102A-1	C81.63g-97
2G/GX7	Gauge "B" for Checking Maximum Insertion Force in Lampholders	7006-102B-1	C81.63g-97
2G7	Gauge "C" for Checking Minimum Retention Force in Lampholders	7006-102C-1	C81.63g-97
2GX7	Gauge "A" for Checking Maximum Insertion Force and Maximum Withdrawal Force in Lampholders	7006-103-1	C81.63g-97
2GX7	Gauge "C" for Checking Minimum Retention Force in Lampholders	7006-103A-1	C81.63g-97
2G7, 2GX7, 2G11, G23/GX23, G/GX/GY24, G/GX/GY32	Single-Pin Gauge "D" for Checking Maximum Withdrawal Force of Contacts in Lampholders	7006-69D-5	C81.63t-98
	Single-Pin Gauge "E" for Checking Minimum Retention Force of Contacts in Lampholders	7006-69E-5	C81.63t-98
GU7	"Go" and "Not Go" Gauge for Bi-Pin Lamp Bases	7006-113-1	C81.63ss1-99
GU7	"Go" Gauge for Checking Maximum Insertion and Withdrawal Torques in Lampholders	7006-113A-1	C81.63ss1-99
G/GX7.9	"Go" Gauge for Based Lamps	3-356-1	C81.63-91
G/GX7.9	"Go" Gauges for Lampholders	3-359-1	C81.63-91
G/GX7.9	Minimum Contact Retention Force Gauge for Lampholders	3-362-1	C81.63-91
G9.5	"Go" Gauge for Based Lamps	3-368-1	C81.63-91
G9.5	"Go" Gauge for Lampholders	3-372-1	C81.63-91
G9.5	Minimum Contact Retention Force Gauge for Lampholders	3-377-1	C81.63-91

Copyright National Electrical Manufacturers Association
Provided by IHS under license with NEMA
No reproduction or networking permitted without license from IHS
Not for Resale

Universal Contents of C81.63
Gauges for Electric Lamp Bases and Lampholders

System	Title	Std. Sheet No.	Published In
GY/GZ9.5	"Go" Gauges for Based Lamps	3-369-1	C81.63-91
GY/GZ9.5	"Go" Gauges for Lampholders	3-373-1	C81.63-91
GY/GZ9.5	"Not-Go" Gauge for Lampholders	3-374-1	C81.63-91
G10q	"Go" Gauge for Four-Pin Circular Fluorescent Lamp Base on Finished Lamps	3-383-1	C81.63-91
G10q	Contact Spacing Gauges for Four-Pin Lampholders for Circular Fluorescent Lamps	3-386-1	C81.63-91
G10q	Contact Depth Gauge for Four-Pin Lampholders for Circular Fluorescent Lamps	3-387-1	C81.63-91
2G11	"Go" Gauge for Caps on Finished Lamps	7006-82-1	C81.63g-97
2G11	Gauge "A" for Checking Maximum Insertion Force and Maximum Withdrawal Force in Lampholders	7006-82A-1	C81.63g-97
2G11	Plug Gauge "B" for Checking Maximum Insertion Force and Maximum Withdrawal Force in Lampholders	7006-82B-1	C81.63g-97
2G11	Gauge "C" for Checking Minimum Retention Force in Lampholders	7006-82C-1	C81.63g-97
2G11	Single Pin Gauge "D" for Maximum Withdrawal Force on Contacts of Lampholder	3-399-2	C81.63a-93
2G11	Single Pin Gauge "E" for Minimum Withdrawal Force on Contacts of Lampholder	3-400-2	C81.63a-93
G12	"Go" and "Not-Go" Gauge for Caps on Finished Lamps	7006-80-1	C81.63g-97
G12	Plug Gauge "A" for Checking Lampholders	7006-80A-1	C81.63g-97
G12	Plug Gauge "B" for Checking Lampholders	7006-80B-1	C81.63g-97
G12	Plug Gauge "C" for Checking Lampholders	7006-80C-1	C81.63g-97
G12, PG/X12	Single Pin Gauge "D" for Checking Lampholders	7006-80D-1	C81.63ss-99
G12, PG/X12	Single Pin Gauge "E" for Checking Lampholders	7006-80E-1	C81.63ss-99
G13	"Go" and "Not-Go" Gauge for Medium Bi-Pin Bases on Finished Lamps	3-406-2	C81.63b-94
G13	"Go" and "Not-Go" Gauge for Unmounted Medium Bi-Pin Bases	3-407-2	C81.63b-94
G13	Pin Torsion Device for Medium Bi-Pin Bases	3-410-1	C81.63-91
G13	Torsion Test Device for Medium Bi-Pin Lampholders	3-414-1	C81.63-91
G13	Double-Ended "Go" Gauges for a Combined Pair of Medium Bi-Pin Lampholders	3-417-2	C81.63b-94
G13	Double-Ended Gauges for Testing Contact-Making for a Combined Pair of Medium Bi-Pin Lampholders Mounted at Maximum Spacing	3-418-2	C81.63b-94
2G13	"Go" Gauges for Bases	3-420-2	C81.63s-98
2G13	"Go" Gauges for Testing Insertion and Contact-Making for Lampholders	3-423-1	C81.63-91
2G13	Gauge for Testing Contact-Making for Lampholders	3-424-1	C81.63-91
G16d	"Go" Gauge for Mogul and Extended Mogul End-Prong Bases	3-430-3	C81.63n-97
G16d	"Go" Gauge for Mogul End-Prong Connector	3-433-3	C81.63n-97
G17t/q	"Go" Gauge for Based Lamps (Pin Arrangement No. 1)	3-439-1	C81.63-91
G17q	"Go" Gauge for Lampholders (Pin Arrangement No. 1)	3-443-1	C81.63-91
GX17q	"Go" Gauge for Based Lamps (Pin Arrangement No.2)	3-440-1	C81.63-91

Copyright National Electrical Manufacturers Association
Provided by IHS under license with NEMA
No reproduction or networking permitted without license from IHS
Not for Resale

Universal Contents of C81.63
Gauges for Electric Lamp Bases and Lampholders

System	Title	Std. Sheet No.	Published In
GX17q	"Go" Gauge for Four-Pin Prefocus Lampholders (Pin Arrangement No. 2)	3-444-1	C81.63-91
G/GX17q	Two-Pin Contact-Making Gauge for Four-Pin Prefocus Lampholders	3-445-1	C81.63-91
G/GX17q	Rotation Gauge for Four-Pin Prefocus Lampholders	3-446-1	C81.63-91
G20	"Go" Gauge for Mogul Bi-Pin Bases on Finished Lamps	3-452-1	C81.63-91
G20	"Go" Gauges for Mogul Bi-Pin Lampholders	3-455-1	C81.63-91
G20	Torsion Test Device for Mogul Bi-Pin Lampholders	3-456-1	C81.63-91
G20	Double-Ended Gauge, Maximum Length Lamp and Minimum Lampholder Spacing for Mogul Bi-Pin Lampholders	3-459-1	C81.63-91
G20	Double-Ended Gauge, Minimum Length Lamp and Maximum Lampholder Spacing for Mogul Bi-Pin Lampholders	3-460-1	C81.63-91
G22	"Go" and "Not-Go" Gauge for Medium-Bipost-Based Lamps	3-466-1	C81.63-91
G22	"Go" Gauge for Medium Bipost Lampholders	3-469-1	C81.63-91
G23	"Go" and "Not Go" Gauge for Bi-Pin Caps on Finished Lamps	7006-69-2	C81.63g-97
G23	Plug Gauge "A" for Checking Maximum Insertion Force and Maximum Withdrawal Force for Lampholders	7006-69A-1	C81.63g-97
G/GX23	Plug Gauge "B" for Checking Maximum Insertion Force in Lampholders	7006-69B-2	C81.63g-97
G23	Plug Gauge "C" for Checking Minimum Retention Force in Lampholders	7006-69C-2	C81.63t-98
GX23	"Go" and "Not Go" Gauge for Bi-Pin Cap on Finished Lamps	7006-86-1	C81.63g-97
GX23	Plug Gauge "A" for Checking Maximum Insertion Force and Maximum Withdrawal Force in Lampholders	7006-86A-1	C81.63g-97
GX23	Plug Gauge "C" for Checking Minimum Retention Force in Lampholders	7006-86B-1	C81.63g-97
G/GX23,G24, G32, GX32d	Single Pin Gauge "D" for Checking Maximum Withdrawal Force of Contacts in Lampholders	3-486-3	C81.63b-94
G/GX23,G24, G32, GX32d	Single Pin Gauge "E" for Checking Minimum Retention Force of Contact in Lampholders	3-487-3	C81.63b-94
G/GX/GY24	"Go" and "Not Go" Gauge for Caps	7006-78-2	C81.63g-97
G/GX/GY24	Plug Gauges "A" for Checking Maximum Insertion Force and Maximum Withdrawal Force in Lampholders	7006-78A-2	C81.63g-97
G/GX/GY24	Plug Gauges "B" for Checking Maximum Insertion Force in Lampholders	7006-78B-2	C81.63g-97
G/GX/GY24	Plug Gauges "C" for Checking Minimum Retention Force in Lampholders	7006-78C-2	C81.63g-97
G/GX/GY24	"Not Go" Gauges "F" for Checking Non-Interchangeability of Caps in Lampholders	7006-78F-3	C81.63g-97
G/GX/GY24	"Go" Gauges "G" for Checking Key Slots in Lampholders	7006-78G-2	C81.63g-97
G/GX/GY32	"Go" and "Not Go" Gauges for Caps on Finished Lamps	7006-87-2	C81.63g-97
G/GY32	Plug Gauges "A_1" for Checking Maximum Insertion Force and	7006-87A-2	C81.63g-97

Copyright National Electrical Manufacturers Association
Provided by IHS under license with NEMA
No reproduction or networking permitted without license from IHS
Not for Resale

Universal Contents of C81.63
Gauges for Electric Lamp Bases and Lampholders

System	Title	Std. Sheet No.	Published In
	Maximum Withdrawal Force in Lampholders		
G/GX/GY32	Plug Gauges "B" for Checking Maximum Insertion Force in Lampholders	7006-87B-2	C81.63g-97
G/GX/GY32	Plug Gauges "C" for Checking Minimum Retention Force in Lampholders	7006-87C-2	C81.63g-97
G/GX/GY32	"Not Go" Gauges "F" for Checking Non-Interchangeability of Caps in Lampholders	7006-87D-2	C81.63g-97
G/GX/GY32	"Go" Gauges "G" for Checking Key Slots in Lampholders	7006-87E-2	C81.63g-97
GX32	Plug Gauge "A_2" for Checking Maximum Insertion Force and Maximum Withdrawal Force in Lampholders	7006-87F-2	C81.63g-97
G38	"Go" Gauge for Mogul Bipost-Based Lamps	3-519-1	C81.63-91
G38	"Go" and "Not-Go" Gauge for Posts of Mogul Bipost-Based Lamps	3-520-1	C81.63-91
G38	"Go" Gauge for Mogul Bipost Lampholders	3-523-1	C81.63-91
PG/PGX12	"Go" and "Not Go" Gauges for Caps on Finished Lamps	7006-81-2	C81.63ss-99
PG/PGX12	Plug Gauges "A" for Checking Lampholders	7006-81A-2	C81.63ss-99
PG/PGX12	Plug Gauges "B" for Checking Lampholders	7006-81B-2	C81.63ss-99
PG/PGX12	Plug Gauges "C" for Checking Lampholders	7006-81C-2	C81.63ss-99
PG/PGX12	Plug Gauges "F" for Checking Contact-Making in Lampholders	7006-81F-2	C81.63ss-99
PG/PGX12	Plug Gauges "G" for Checking Contact-Making in Lampholders	7006-81G-2	C81.63ss-99
PG12	"Go" Gauge for Caps on Finished Lamps for Checking the Height of the Lugs	7006-81H-1	C81.63g-97
P30	"Go" & "Not-Go" Gauge for Diameter of Collar on Prefocus Bases on Finished Lamps	3-709-1	C81.63-91
P40	"Go" Gauge for Mogul Prefocus-Based Lamps and for Unmounted Bases	3-715-1	C81.63-91
P40	"Go" Gauge for Mogul Prefocus Lampholders	3-718-1	C81.63-91
R7s	"Go" Gauge for Recessed Single-Contact Lampholders at Minimum Spacing	3-770-1	C81.63-91
R17d	"Go" and "Not-Go" Gauge for Recessed Double-Contact Bases on Finished Lamps	3-777-1	C81.63-91
R17d	"Go" Gauge for Recessed Double-Contact Lampholders	3-780-1	C81.63-91
R17d	Contact-Making Gauge for Recessed Double-Contact Lampholders	3-781-1	C81.63-91
R17d	Double-Ended "Go" Gauge, Maximum Length Lamp and Minimum Lampholder Spacing, for Recessed Double-Contact Lampholders	3-784-1	C81.63-91
R17d	Double-Ended "Go" Gauge, Minimum-Length Lamp and Maximum Lampholder Spacing, for Recessed Double-Contact Lampholders	3-785-1	C81.63-91
SX4	"Go" Ring Gauge for Submidget-Flanged-Based Lamps	3-850-1	C81.63-91
SX4	"Not-Go" Ring Gauge for Submidget-Flanged-Based Lamps	3-851-1	C81.63-91
S14s	Gauge "A" for Lampholders	7006-112A-1	C81.63t-99
S14s	Gauge "B" for Lampholders	7006-112B-1	C81.63t-99
S14s	Gauge "C" for Lampholders	7006-112C-1	C81.63t-99
S14d	Gauge "A" for Lampholders	7006-112D-1	C81.63t-99
S14d	Gauges "B1" and "B2" for Lampholders	7006-112E-1	C81.63t-99

Copyright National Electrical Manufacturers Association
Provided by IHS under license with NEMA
No reproduction or networking permitted without license from IHS
Not for Resale

Universal Contents of C81.63
Gauges for Electric Lamp Bases and Lampholders

System	Title	Std. Sheet No.	Published In
W2.1x4.9d	Minimum and Maximum Retention Gauges	3-900-1	C81.63h-96
W2.1x9.2d	Minimum and Maximum Retention Gauges	3-920-1	C81.63h-96
W2.5x16	"Go" Gauges for Checking Bases	7006-104-1	C81.63u-98
W2.5x16	"Go" Gauges for Checking Bases	7006-104A-1	C81.63u-98
Fluor.Starters	"Go" Gauges for Fluorescent Lamp Starter Holders	3-900-1	C81.63-91
Fluor.Starters	Contact-Making & Retention Force Gauge for Fluorescent Lamp Starter Holders	3-901-1	C81.63-91

Copyright National Electrical Manufacturers Association
Provided by IHS under license with NEMA
No reproduction or networking permitted without license from IHS

Not for Resale

"Go" Gauge for BA9 Miniature-Bayonet-Based Lamps

The drawing is intended only to illustrate the essential dimensions of the gauge.

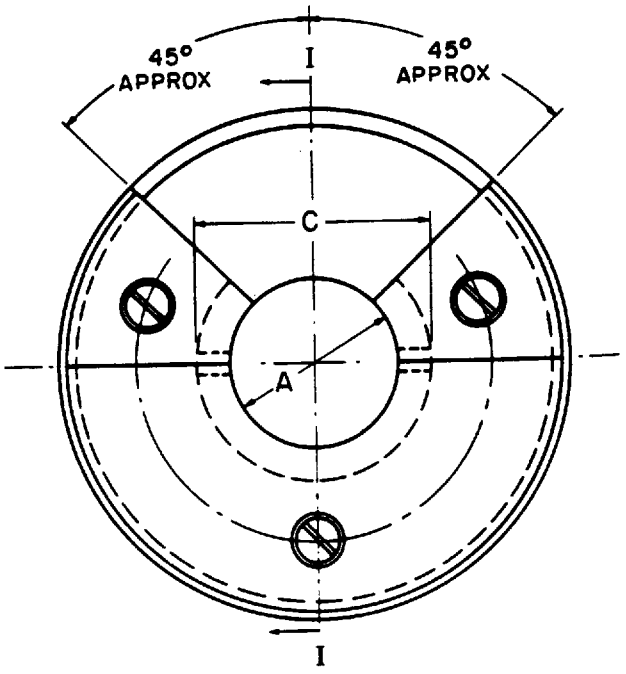

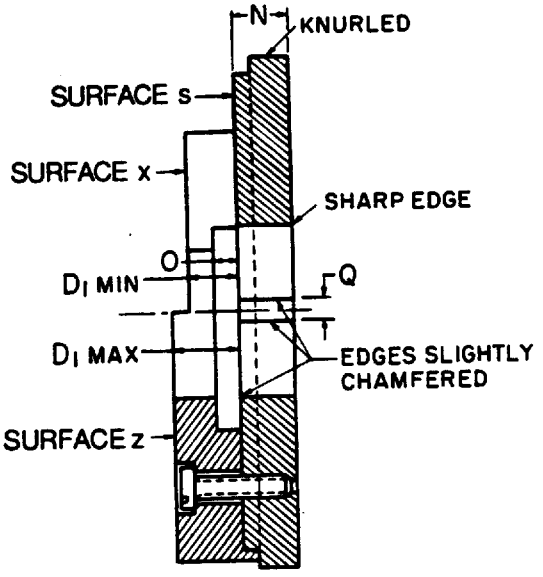

Section I-I

Reference	Dimension in	Tolerance in	Nearest metric equivalent mm
A	0.366	+0.0005	9.30
C	0.432	+0.0005	10.97
D_1 min	0.180	−0.0005	4.57
D_1 max	0.255	+0.0005	6.48
N	0.180	−0.0005	4.57
O	0.120	±0.001	3.05
Q	0.083	+0.0005	2.11

Purpose
To check dimension A max, C max, D_1 min, D_1 max, N min, and the combination of E max (pin diameter) and the pin alignment tolerance.

For details of BA9 bases, see ANSI C81.61, Standard Sheet 1-10.

Testing
Insert the base into the gauge, passing the pins through slots Q. Turn the base through a small angle and hold it so that the pins are in close contact with surface s. Check the position of the contact.

Copyright National Electrical Manufacturers Association
Provided by IHS under license with NEMA
No reproduction or networking permitted without license from IHS
Not for Resale

"Not-Go" Gauge for BA9 Miniature-Bayonet-Based Lamps

The drawing is intended only to illustrate the essential dimensions of the gauge.

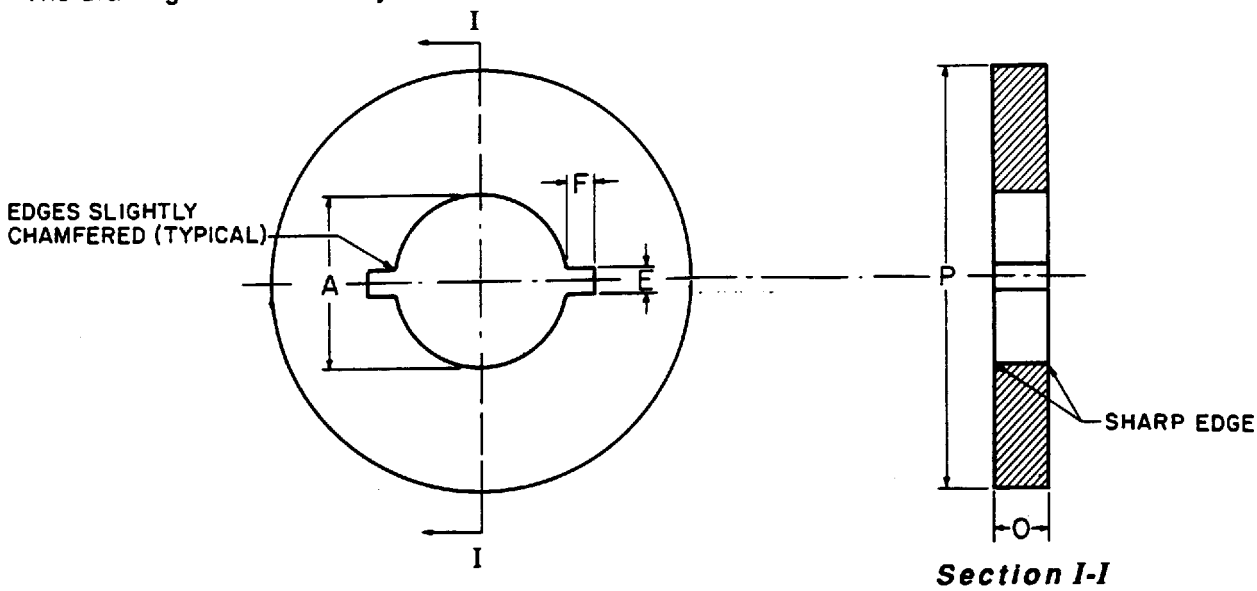

Section I-I

Reference	Dimension in	Tolerance in	Nearest metric equivalent mm
A	0.357	−0.0005	9.07
E	0.125	±0.020	3.18
F	0.125	±0.020	3.18
O	0.250	approx	7.0
P	1.5	approx	38.0

Purpose
To check dimension A min.

For details of BA9 bases, see ANSI C81.61, Standard Sheet 1-10.

Testing
Attempt to insert the base into the gauge.

Copyright National Electrical Manufacturers Association
Provided by IHS under license with NEMA
No reproduction or networking permitted without license from IHS
Not for Resale

"Go" and "Not-Go" Plug Gauges for BA9 Miniature-Bayonet Lampholders

Gauge	Diameter in	Tolerance in	Nearest metric equivalent mm
"Go"	0.367	−0.0005	9.31
"Not-Go"	0.373	+0.0005	9.48

NOTE – The basic part of this Standard Sheet was derived from SAE (Society of Automotive Engineers) J567b.

For details of BA9 bases, see ANSI C81.61, Standard Sheet 1-10.

Testing
Insert the "Go" gauge into the lampholder. Attempt to insert the "Not-Go" gauge.

Copyright National Electrical Manufacturers Association
Provided by IHS under license with NEMA
No reproduction or networking permitted without license from IHS Not for Resale

BA9 Lampholder Minimum And Maximum Retention Gauges

The drawing is intended only to indicate the dimensions to be controlled.

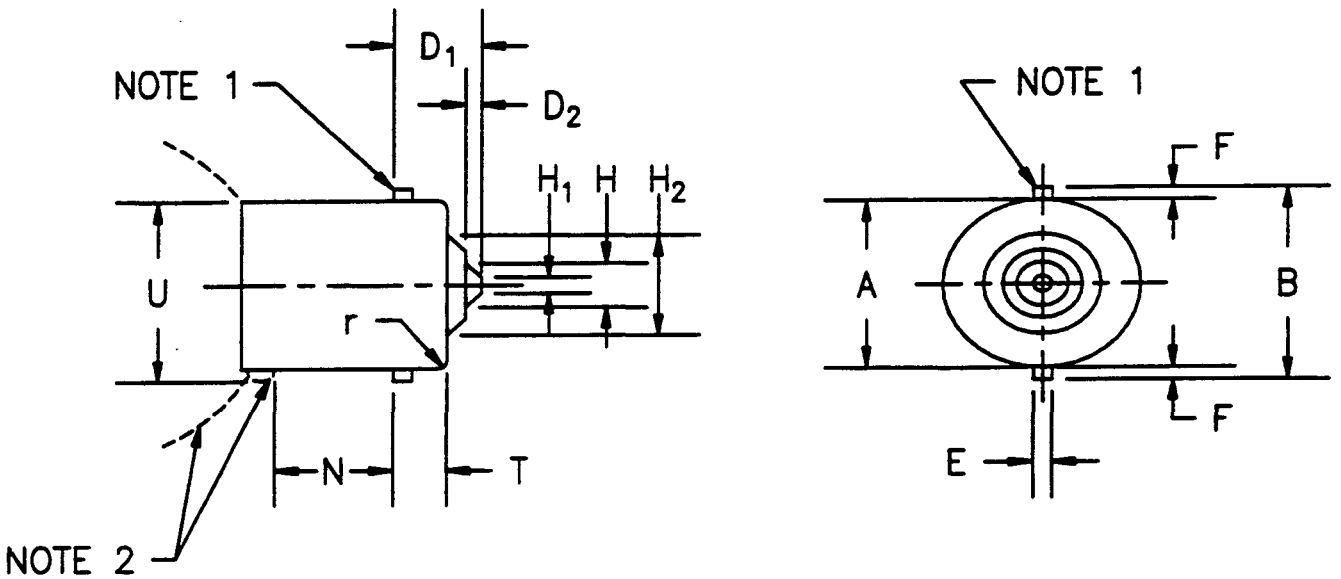

Standard Dimensions (millimeters)				
Reference	Min. Gauge	Tolerance	Max Gauge	Tolerance
A	9.07	-0.01	9.30	+0.01
B	10.26	-0.01	10.97	+0.01
D1 (Note 1)	4.57	-0.01	6.48	+0.01
D2	0.38	-0.01	1.27	-0.13
E	1.55	-0.01	1.70	+0.01
F	0.64	-0.01	—	—
H	3.73	-0.03	4.32	+0.03
H1	1.52	+0.13	1.52	+0.13
H2	6.40	NOM	6.40	NOM
N	4.57	-0.01	—	—
r	0.80	NOM	0.80	NOM
T	2.41	-0.03	3.33	+0.01
U	—	—	10.41	+0.01

NOTES:
1. Pin alignment tolerance is +/-0.03.
2. Allowance for bulb envelope and side solder may be required depending on the construction of the Lampholder.

Copyright © 1998 by National Electrical Manufacturers Association
1300 North 17th Street, Suite 1847, Rosslyn, VA 22209

First Edition
February 1999

Copyright National Electrical Manufacturers Association
Provided by IHS under license with NEMA
No reproduction or networking permitted without license from IHS
Not for Resale

Purpose

To check BA9 Lampholders for retention of bases of both minimum and maximum dimensions.

Testing

Insert both the minimum and maximum gages in sequence into the lampholder until fully seated and rotated until locked. The maximum gauge's insertion force and rotational torque shall not exceed the values specified on ANSI C81.62 Standard Sheet 2-10.

Holder

See ANSI C81.62 Standard Sheet 2-10.

Base

See ANSI C81.6 Standard Sheet 1-10.

Copyright © 1998 by National Electrical Manufacturers Association
1300 North 17th Street, Suite 1847, Rosslyn, VA 22209

First Edition
February 1999

Copyright National Electrical Manufacturers Association
Provided by IHS under license with NEMA
No reproduction or networking permitted without license from IHS
Not for Resale

"NOT GO" GAUGES FOR CAPS ON FINISHED LAMPS
CALIBRES "N'ENTRE PAS" POUR CULOTS SUR LAMPES TERMINEES
BA9, B15, B22 & BY22d

Dimensions in millimetres - Dimensions en millimètres

The drawing is intended only to illustrate the essential dimensions of the gauges.
Le dessin a pour seul but d'illustrer les dimensions essentielles des calibres.

For details of caps BA9, B15, B22 and BY22d,
see sheets 7004-14, 7004-11, 7004-10 and 7004-17 respectively.

Pour les détails des culots BA9, B15, B22 et BY22d,
voir feuilles 7004-14, 7004-11, 7004-10 et 7004-17 respectivement.

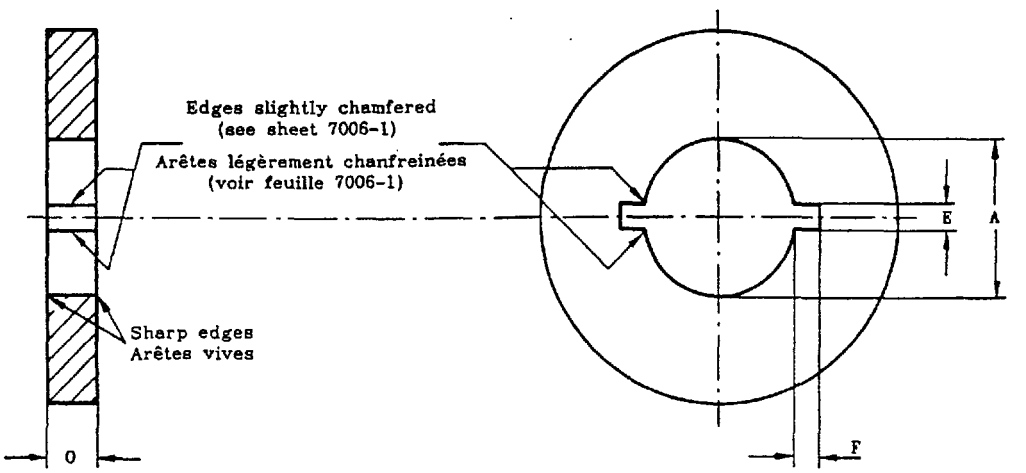

PURPOSE: To check dimension A min. of caps BA9, B15, B22 and BY22d on finished lamps respectively.

TESTING: Caps on finished lamps shall be assumed to be correct if the gauge does not pass over the cap by its own weight.

The gauge for B15 may also be used for checking unmounted caps.

BUT: Vérification de la dimension A min. des culots BA9, B15, B22 et BY22d sur lampes terminées respectivement.

ESSAI: Un culot sur une lampe terminée est jugé conforme si le calibre n'entre pas, sous l'effet de son propre poids, autour du culot.

Le calibre pour B15 peut aussi être utilisé pour la vérification des culots non assemblés.

Reference	Dimension				Tolerance
	BA9	B15	B22	BY22d	
A	9,08	15,0	21,75	21,5	+ 0,0 - 0,01
E	2,5	3,5	3,5	3,5	+ 0,5 - 0,5
F	3,5	3,5	3,5	3,5	+ 0,5 - 0,5
O	6	7	7	7	+ 0,1 - 0,1
Mass kg. Masse	0,020	0,050	0,100	0,100	+ 10% - 10%

Copyright National Electrical Manufacturers Association
Provided by IHS under license with NEMA
No reproduction or networking permitted without license from IHS
Not for Resale

"Go" Gauge for BA15 Candelabra Bayonet- Based Lamps

The Drawing is intended to illustrate essential dimensions of the gauge.

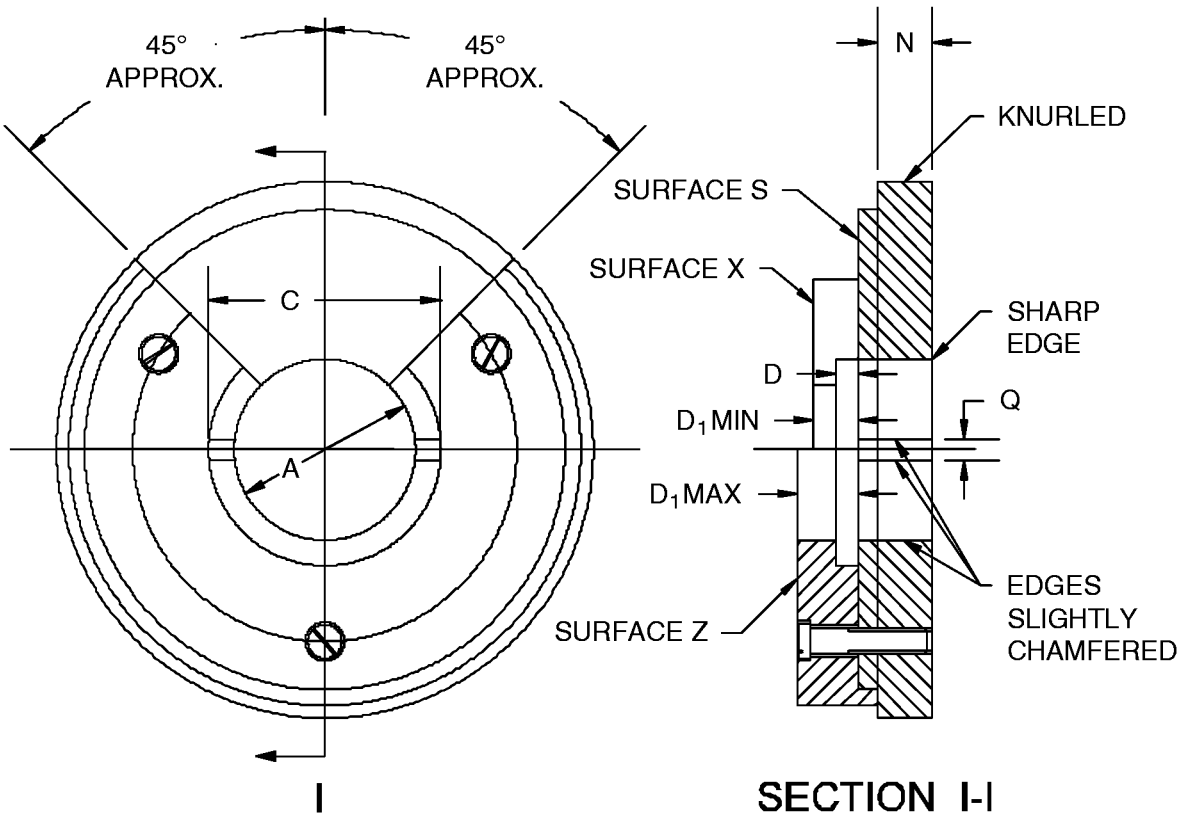

Reference	Dimension (inch)	Tolerance (inch)	Nearest Metric Equivalent (millimeters)
A	0.6025	+0.0005	15.30
C	0.668	+0.0005	16.97
D_1 MIN	0.249	-0.0005	6.0
D1 MAX	0.316	+0.0008	8.03
N	0.350	-0.0005	8.9
O	0.120	±0.001	3.05
Q	0.096	+0.0005	2.44

Copyright © 1997 by American National Standard Lighting Group- NEMA
1300 North 17th Street Suite 1847, Rosslyn, VA 22209

Copyright National Electrical Manufacturers Association
Provided by IHS under license with NEMA
No reproduction or networking permitted without license from IHS
Not for Resale

PURPOSE

To check dimension A max, C max, D1 min, D1 max, N min, and the combination of E max (pin diameter) and the pin alignment.

Copyright © 1997 by American National Standard Lighting Group- NEMA
1300 North 17th Street Suite 1847, Rosslyn, VA 22209

Copyright National Electrical Manufacturers Association
Provided by IHS under license with NEMA
No reproduction or networking permitted without license from IHS

Not for Resale

"Not-Go" Gauge for BA15 Candelabra-Bayonet-Based Lamps

The drawing is intended only to illustrate essential dimensions of the gauge.

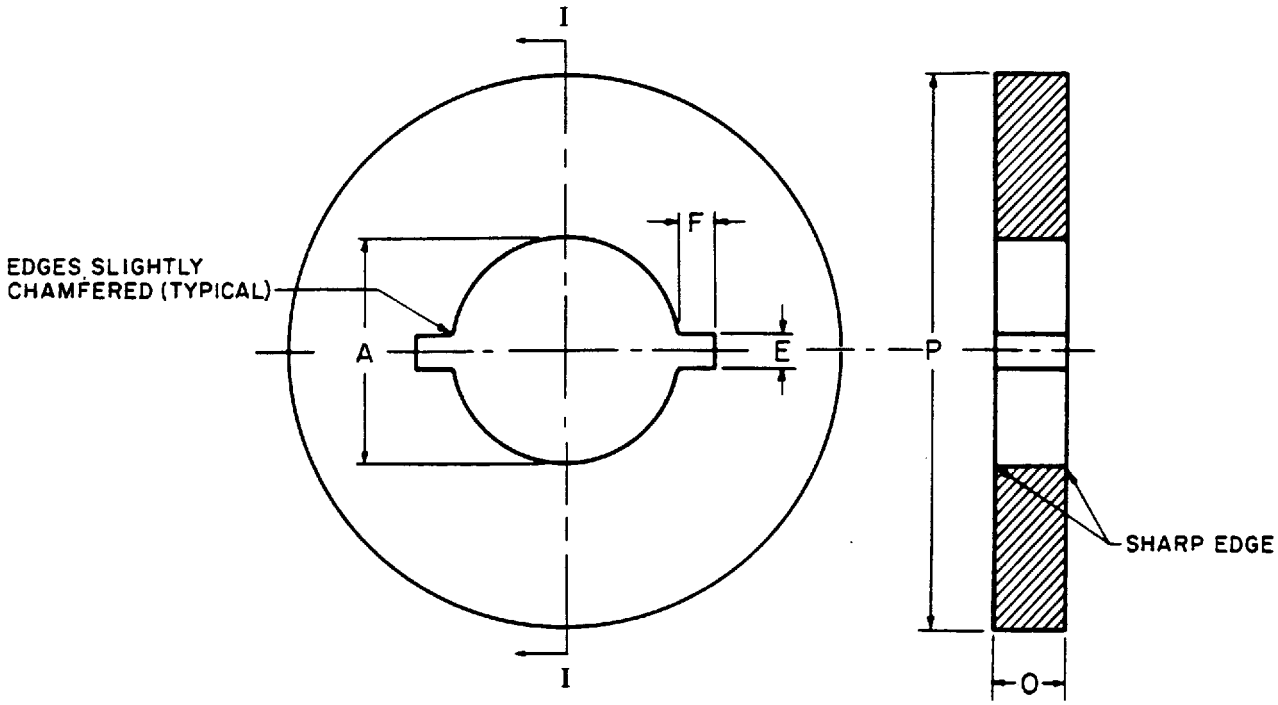

Section I-I

Reference	Dimension in	Tolerance in	Nearest Metric Equivalent mm
A	0.5925	−0.0005	15.05
E	0.140	±0.020	3.5
F	0.140	±0.020	3.5
O	0.250	approx	7.0
P	1.5	approx	38.0

Purpose
To check dimension A min.

For details of BA15 bases, see ANSI C81.61, Standard Sheet 1-20.

Testing
Attempt to insert the base into the gauge.

Copyright National Electrical Manufacturers Association
Provided by IHS under license with NEMA
No reproduction or networking permitted without license from IHS
Not for Resale

"Go" and "Not-Go" Plug Gauges for BA15 Candelabra-Bayonet Lampholders

In certain designs of lampholders, the inside diameter of the shell can be accurately checked only with the lampholder mounted in the fixture in which it is to be used. The "Go" and "Not-Go" plug gauges have diameters as listed in the following table. In checking tension-type lampholders, a reasonable amount of force may be used for inserting the "Go" gauge.

Gauge	Diameter in	Tolerance in	Nearest Metric Equivalent mm
"Go"	0.6035	–0.0005	15.33
"Not-Go"	0.6095	+0.0005	15.48

NOTE – The basic part of this Standard Sheet was derived from SAE J567b.

For details of BA15 bases, see ANSI C81.61, Standard Sheet 1-20.

Testing
Insert the "Go" gauge into the lampholder. Attempt to insert the "Not-Go" gauge.

Copyright National Electrical Manufacturers Association
Provided by IHS under license with NEMA
No reproduction or networking permitted without license from IHS
Not for Resale

GAUGES FOR TESTING THE INSERTION OF CAPS IN LAMPHOLDERS

CALIBRES POUR VERIFIER L'INSERTION DES CULOTS DANS LES DOUILLES

B15d, B22d & BY22d

Dimensions in millimetres - Dimensions en millimètres

The drawing is intended only to illustrate the essential dimensions of the gauges.
Le dessin a pour seul but d'illustrer les dimensions essentielles des calibres.

For details of caps, B15d, B22d and BY22d, see sheets 7004-11, 7004-10 and 7004-17 respectively.

Pour les détails des culots B15d, B22d et BY22d, voir feuilles 7004-11, 7004-10, 7004-17 respectivement.

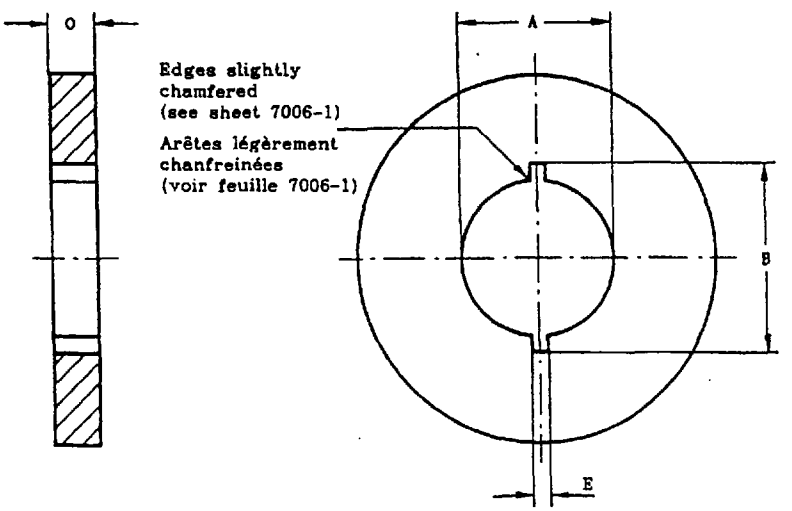

PURPOSE: To check B15d, B22d and BY22d cap dimensions for insertion of the cap on the finished lamp in the lampholder.

TESTING: Without using undue force it shall be possible to insert the cap into the gauge until the pins have passed completely through the slots.

BUT: Vérification des dimensions des culots B15d, B22d et BY22d pour l'insertion du culot sur lampe terminée dans la douille.

ESSAI: Il doit être possible, sans effort exagéré, d'insérer le culot dans le calibre jusqu'à ce que les ergots soient passés complètement à travers les encoches.

Reference	Dimension			Tolerance
	B15d	B22d	BY22d	
A	15,25	22,15	22,0	+ 0,01 - 0,0
B	17,45	27,55	27,0	+ 0,01 - 0,0
E	2,5			+ 0,0 - 0,04
O	6,5			+ 0,1 - 0,1

Copyright National Electrical Manufacturers Association
Provided by IHS under license with NEMA
No reproduction or networking permitted without license from IHS
Not for Resale

6470247 0523162 627

GAUGES FOR THE SLOTS IN LAMPHOLDERS
CALIBRES POUR LES ENCOCHES DES DOUILLES
B15d, B22d, B22d-3 & BY22d

Dimensions in millimetres - Dimensions en millimètres

The drawing is intended only to illustrate the essential dimensions of the gauges.
Le dessin a pour seul but d'illustrer les dimensions essentielles des calibres.

For details of lampholders B15d, B22d, B22d-3 and BY22d, see sheets 7005-16, 7005-10, 7005-10A and 7005-17 respectively.

Pour les détails des douilles B15d, B22d, B22d-3 et BY22d, voir feuilles 7005-16, 7005-10, 7005-10A et 7005-17 respectivement.

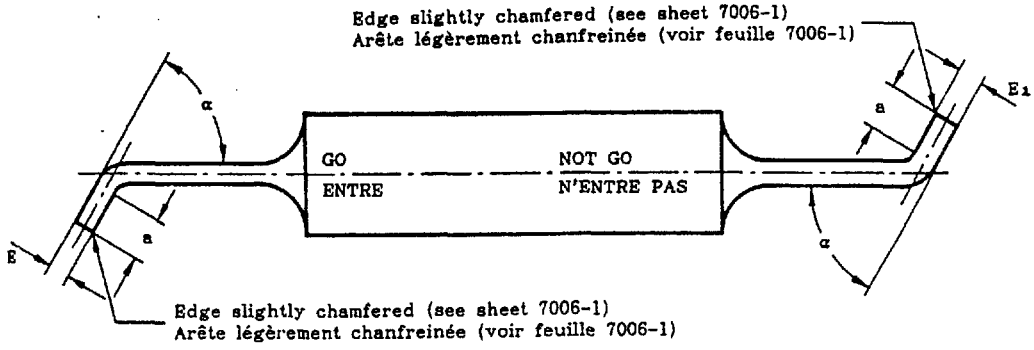

PURPOSE: To check the minimum and maximum width of the slots of lampholders B15d, B22d, B22d-3 and BY22d respectively.

TESTING: The slot is assumed to be correct, if the "GO" side of the gauge enters the slot and passes under the projection until it stops in the resting place of the bayonet pins and if the "NOT GO" side of the gauge does not enter the straight part of the slot.

BUT: Vérification de la largeur minimale et maximale des encoches des douilles B15d, B22d, B22d-3 et BY22d respectivement.

ESSAI: Pour que l'encoche soit jugée conforme, il faut que l'extrémité "ENTRE" du calibre pénètre dans l'encoche et, après avoir passé sous le bossage, vienne à l'emplacement prévu pour l'ergot, et que l'extrémité "N'ENTRE PAS" ne puisse pas pénétrer dans la partie rectiligne de l'encoche.

Reference	Dimension		Tolerance
	B15d	B22d, B22d-3 & BY22d	
E	2,7		+ 0,0 - 0,01
E1	3,2	3,8	+ 0,01 - 0,0
a	6		+ 0,5 - 0,5
α	Approx. 60°		-

Copyright National Electrical Manufacturers Association
Provided by IHS under license with NEMA
No reproduction or networking permitted without license from IHS
Not for Resale

SUPPLEMENTARY "GO" GAUGES FOR LAMPHOLDERS
CALIBRES "ENTRE" SUPPLEMENTAIRES POUR LES DOUILLES
B22d & BY22d

Dimensions in millimetres - Dimensions en millimètres

The drawing is intended only to illustrate the essential dimensions of the gauges.
Le dessin a pour seul but d'illustrer les dimensions essentielles des calibres.

For details of lampholders B22d and BY22d, see sheets 7005-10 and 7005-17 respectively.
Pour les détails des douilles B22d et BY22d, voir feuilles 7005-10 et 7005-17 respectivement.

Note. - Special attention is drawn to the rerstricted use of these gauges. See "PURPOSE" below.
Note. - L'attention est spécialement attirée sur l'utilisation restrictive de ces calibres.
Voir "BUT" ci-dessous.

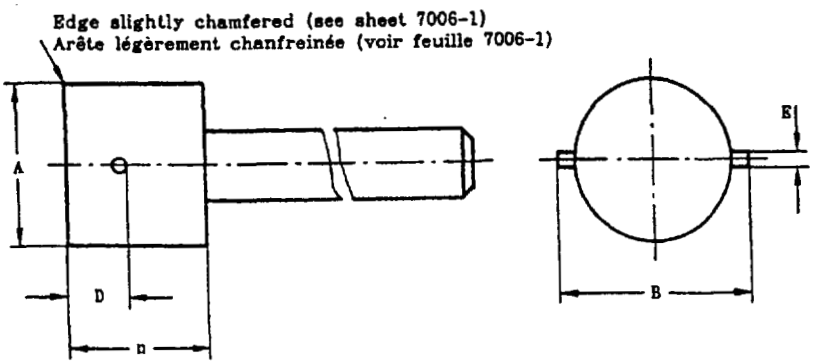

PURPOSE: The gauge shall be used solely to check interchangeability with respect to the corresponding caps B22d and BY22d on finished lamps respectively, after the test for resistance to heat in normal service.

TESTING: It shall be possible to insert the gauge into the holder and to locate the pins at the resting points without using undue force.

BUT: Le calibre doit être utilisé seulement pour vérifier l'interchangeabilité en ce qui concerne les culots B22d et BY22d sur les lampes terminées respectivement, après l'essai pour résistance à la chaleur sous les conditions normales de fonctionnement.

ESSAI: Il doit être possible d'introduire le calibre dans la douille et de placer les ergots au point de repos sans exercer une force anormale.

Reference	Dimension		Tolerance
	B22d	BY22d	
A	22,2		+ 0,01 - 0,0
B	27,55		+ 0,01 - 0,0
D	8,02	9,02	+ 0,01 - 0,0
E	2,2		+ 0,01 - 0,0
n	20		+ 1 - 1

Copyright National Electrical Manufacturers Association
Provided by IHS under license with NEMA
No reproduction or networking permitted without license from IHS
Not for Resale

GAUGES FOR CHECKING CONTACT POSITION AND CONTACT FORCE IN BAYONET LAMPHOLDERS
CALIBRES POUR LA VERIFICATION DE LA POSITION DU CONTACT ET DE LA FORCE DE CONTACT DANS LES DOUILLES A BAIONNETTE
B22d & BY22d

Dimensions in millimetres - Dimensions en millimètres

The drawing is intended only to illustrate the dimensions essential for interchangeability.
Le dessin a pour seul but d'illustrer les dimensions essentielles pour l'interchangeabilité.

For details of lampholders B22d and BY22d, see sheets 7005-10 and 7005-17 respectively.
Pour les détails des douilles B22d et BY22d, voir feuilles 7005-10 et 7005-17 respectivement.

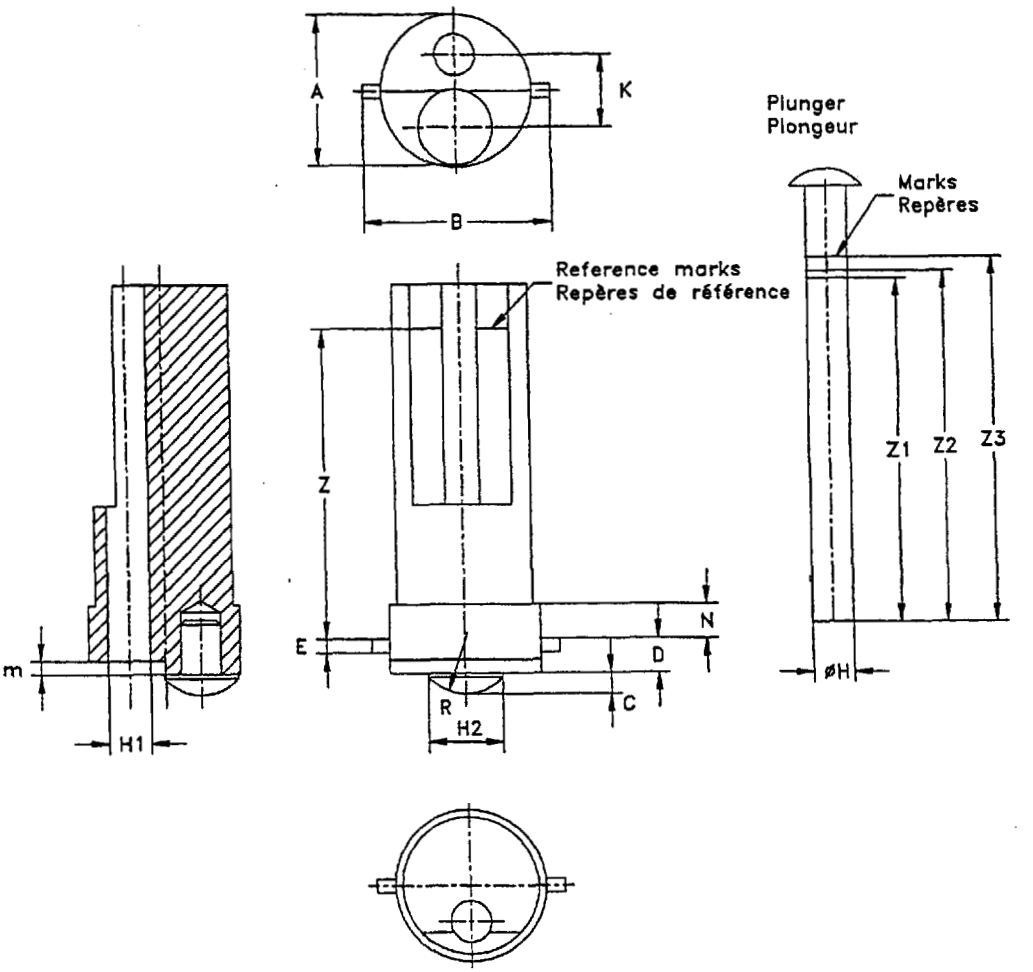

The drawing does not show a means of clamping the gauge in the lampholder.
The manner in which such means are provided depends on the design of the lampholder under test. However, it must be ensured that in every case both pins of the gauge are held firmly against the corresponding resting points of the lampholder.

Le dessin n'indique pas un mode de fixation du calibre dans la douille.
La façon d'assurer cette fixation dépend de la conception de la douille essayée. Toutefois, il doit être assuré dans tous les cas que les deux ergots du calibre sont maintenus fermement contre les points de repos correspondants de la douille.

Copyright National Electrical Manufacturers Association
Provided by IHS under license with NEMA
No reproduction or networking permitted without license from IHS
Not for Resale

GAUGES FOR CHECKING CONTACT POSITION AND CONTACT FORCE IN BAYONET LAMPHOLDERS
CALIBRES POUR LA VERIFICATION DE LA POSITION DU CONTACT ET DE LA FORCE DE CONTACT DANS LES DOUILLES A BAIONNETTE
B22d & BY22d

Dimensions in millimetres - Dimensions en millimètres

Reference	Dimension B22d	Dimension BY22d	Tolerance
A	22,15	22	+ 0,0 - 0,1
B	27,55		+ 0,0 - 0,2
C	3,0		+ 0,05 - 0,05
D	5,0	6,0	+ 0,0 - 0,05
E	2		+ 0,2 - 0,0
H	6,0		+ 0,0 - 0,03
H1	6,01		+ 0,03 - 0,0
H2	11		+ 0,1 - 0,0
K	10,5		+ 0,1 - 0,1
N	Approx. 5 (1)		-- --
R	7,5		+ 0,2 - 0,2
Z	Approx. 45		-- --
Z1	Z + 4,9		+ 0,05 - 0,05
Z2	Z + 6,0	Z + 7,5	+ 0,05 - 0,05
Z3	Z + 8,0	Z + 9,0	+ 0,05 - 0,05
m	2		+ 0,1 - 0,1

(1) This value is optional and is recommended where the gauge is used for checking conventional pendant type holders. It is intended to simulate as nearly as possible the barrel of the lamp cap.
(1) Cette valeur est facultative et recommandée lorsque le calibre est utilisé pour la vérification des douilles de type conventionnel. Elle a pour but de simuler aussi bien que possible le corps du culot.

PURPOSE: To check lampholders B22d and BY22d with respect to:
a) Dimension Dmax.
b) The minimum and maximum forces of the individual contacts corresponding with those resulting from the fitting of caps B22d and BY22d of which the values of dimension D1 are minimum and maximum respectively.

TESTING:
a) To check dimension Dmax.
With the relevant gauge held firmly in the lampholder and with both retention pins held against the corresponding resting points, the plunger is inserted into the bore provided until it touches one of the holder contacts. With the lampholder held with its axis vertical and with the gauge uppermost, the mark Z1 on the plunger shall coincide with or be above the reference marks on the gauge body. During this test no force shall be applied to the plunger.
The test is repeated for the other holder contact.

b) To check the minimum and maximum contact force.
With the relevant gauge assembled in the lampholder as in a) above, an axial force is applied to the plunger until mark Z2 coincides with the reference marks on the gauge body. At this position the force shall be measured and shall be not less than:
- for B22d lampholders, the minimum force specified in table 3 of IEC 61184, or
- for BY22d lampholders, the minimum force specified on lampholder sheet 7005-17.

The force is then increased until mark Z3 coincides with the relevant marks. At this position the force shall be measured and shall be not more than:
- for B22d lampholders, the maximum force specified in table 3 of IEC 61184, or
- for BY22d lampholders, the maximum force specified on lampholder sheet 7005-17.

The test is repeated for the other holder contact.

Copyright National Electrical Manufacturers Association
Provided by IHS under license with NEMA
No reproduction or networking permitted without license from IHS
Not for Resale

GAUGES FOR CHECKING CONTACT POSITION AND CONTACT FORCE IN BAYONET LAMPHOLDERS
CALIBRES POUR LA VERIFICATION DE LA POSITION DU CONTACT ET DE LA FORCE DE CONTACT DANS LES DOUILLES A BAIONNETTE
B22d & BY22d

Dimensions in millimetres - Dimensions en millimètres

BUT: Vérification des douilles B22d et BY22d en ce qui concerne:
a) Dimension Dmax.
b) Les forces minimale et maximale de contact individuel correspondant avec les forces obtenues lorsqu'on introduit des culots B22d et BY22d pour lesquels les valeurs de la dimension D1 sont respectivement minimale et maximale.

ESSAI:
a) Vérification de la dimension Dmax.
Le calibre intéressé maintenu fermement dans la douille et les deux ergots maintenus contre les points de repos correspondants, le plongeur est introduit à l'intérieur de l'évidement du calibre jusqu'à ce qu'il touche un des contacts de la douille. La douille étant tenue de telle sorte que son axe soit vertical et le calibre étant maintenu au-dessus, le repère Z1 sur le plongeur doit coïncider avec ou être au-dessus du repère de référence figurant sur le corps du calibre. Durant cet essai, aucune force ne doit être appliquée au plongeur.
L'essai est répété pour l'autre contact de la douille.

b) Vérification des forces de contact minimale et maximale.
Le calibre intéresé étant introduit dans la douille comme ci-dessus en a), une force axiale est appliquée au plongeur jusqu'à ce que le repère Z2 coïncide avec le repère de référence figurant sur le corps du calibre. A cette position, la force sera mesurée et ne doit pas être inférieure à:
- pour douilles B22d, la force minimale spécifiée dans le tableau 3 de la CEI 61184, ou
- pour douilles BY22d, la force minimale spécifiée dans la feuille de douille 7005-17.

La force est alors augmentée juqu'à ce que la repère Z3 coïncide avec le repère de référence. A cette position, la force sera mesurée et ne doit pas être supérieure à:
- pour douilles B22d, la force maximale spécifiée dans le tableau 3 de la CEI 61184, ou
- pour douilles BY22d, la force maximale spécifiée dans la feuille de douille 7005-17.

L'essai est répété pour l'autre contact de la douille.

Copyright National Electrical Manufacturers Association
Provided by IHS under license with NEMA
No reproduction or networking permitted without license from IHS
Not for Resale

GAUGES FOR CHECKING CONTACT POSITION AND CONTACT FORCE IN BAYONET LAMPHOLDERS
CALIBRES POUR LA VERIFICATION DE LA POSITION DU CONTACT ET DE LA FORCE DE CONTACT DANS LES DOUILLES A BAIONNETTE
B15d

Dimensions in millimetres - Dimensions en millimètres

The drawing is intended only to illustrate the dimensions essential for interchangeability.
Le dessin a pour seul but d'illustrer les dimensions essentielles pour l'interchangeabilité.

For details of lampholders B15d, see sheet 7005-16.
Pour les détails des douilles B15d, voir feuille 7005-16.

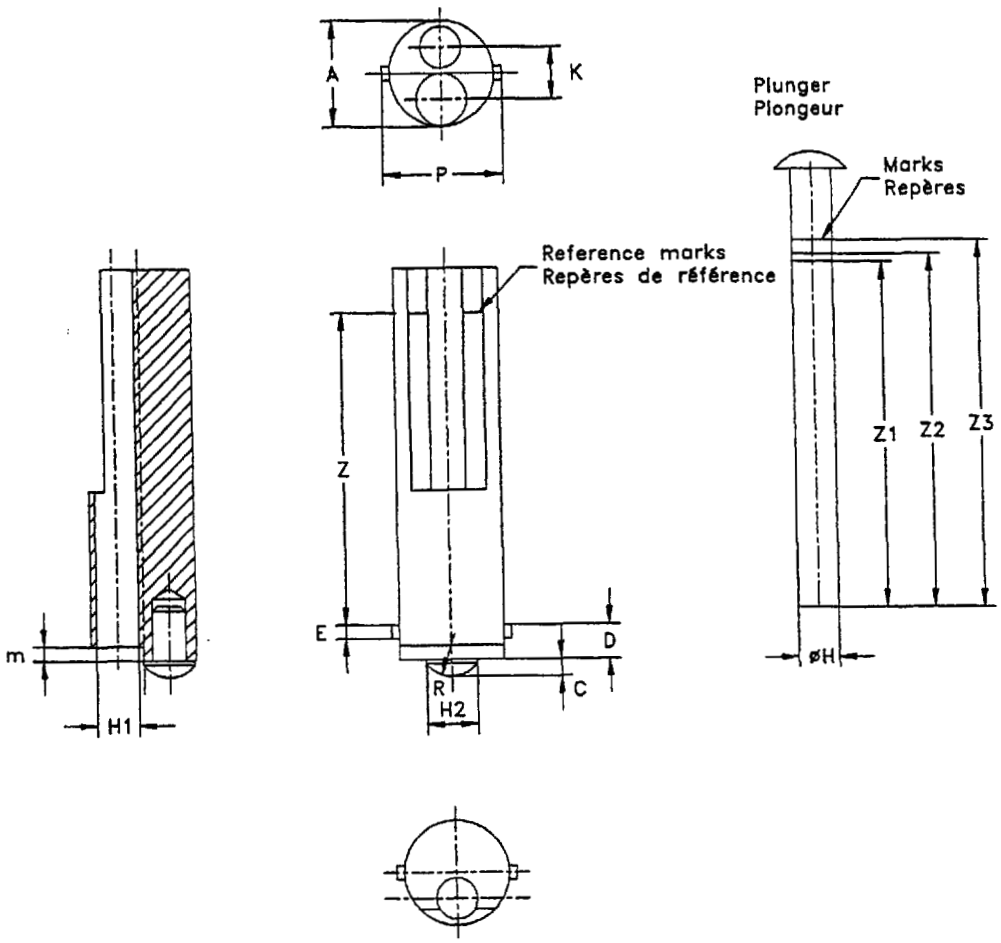

The drawing does not show a means of clamping the gauge in the lampholder.
The manner in which such means are provided depends on the design of the lampholder under test. However, it must be ensured that in every case both pins of the gauge are held firmly against the corresponding resting points of the lampholder.

Le dessin n'indique pas un mode de fixation du calibre dans la douille.
La façon d'assurer cette fixation dépend de la conception de la douille essayée. Toutefois, il doit être assuré dans tous les cas que les deux ergots du calibre sont maintenus fermement contre les points de repos correspondants de la douille.

Copyright National Electrical Manufacturers Association
Provided by IHS under license with NEMA
No reproduction or networking permitted without license from IHS
Not for Resale

GAUGES FOR CHECKING CONTACT POSITION AND CONTACT FORCE IN BAYONET LAMPHOLDERS
CALIBRES POUR LA VERIFICATION DE LA POSITION DU CONTACT ET DE LA FORCE DE CONTACT DANS LES DOUILLES A BAIONNETTE
B15d

Dimensions in millimetres - Dimensions en millimètres

Reference	Dimension	Tolerance
A	15,25	+ 0,0 - 0,1
C	2,5	+ 0,05 - 0,05
D	5,0	+ 0,0 - 0,05
E	2	+ 0,2 - 0,0
H	6,0	+ 0,0 - 0,03
H1	6,01	+ 0,03 - 0,0
H2	7,5	+ 0,1 - 0,0
K	7,5	+ 0,1 - 0,1
P	17,45	+ 0,0 - 0,2
R	4,7	+ 0,2 - 0,2
Z	Approx. 45	-- --
Z1	Z + 4,9	+ 0,05 - 0,05
Z2	Z + 6,0	+ 0,05 - 0,05
Z3	Z + 7,5	+ 0,05 - 0,05
m	2	+ 0,1 - 0,1

PURPOSE: To check lampholders B15d with respect to:
a) Dimension Dmax.
b) The minimum and maximum forces of the individual contacts corresponding with those resulting from the fitting of caps B15d of which the values of dimension D1 are minimum and maximum respectively.

TESTING:
a) To check dimension Dmax.
With the relevant gauge held firmly in the lampholder and with both retention pins held against the corresponding resting points, the plunger is inserted into the bore provided until it touches one of the holder contacts. With the lampholder held with its axis vertical and with the gauge uppermost, the mark Z1 on the plunger shall coincide with or be above the reference marks on the gauge body. During this test no force shall be applied to the plunger.
The test is repeated for the other holder contact.

b) To check the minimum and maximum contact force.
With the relevant gauge assembled in the lampholder as in a) above, an axial force is applied to the plunger until mark Z2 coincides with the reference marks on the gauge body. At this position the force shall be measured and shall be not less than the minimum force specified in table 3 of IEC 61184.
The force is then increased until mark Z3 coincides with the relevant marks. At this position the force shall be measured and shall be not more than the maximum force specified in table 3 of IEC 61184.
The test is repeated for the other holder contact.

BUT: Vérification des douilles B15d en ce qui concerne:
a) Dimension Dmax.
b) Les forces minimale et maximale de contact individuel correspondant avec les forces obtenues lorsqu'on introduit des culots B15d pour lesquels les valeurs de la dimension D1 sont respectivement minimale et maximale.

Copyright National Electrical Manufacturers Association
Provided by IHS under license with NEMA
No reproduction or networking permitted without license from IHS

Not for Resale

GAUGES FOR CHECKING CONTACT POSITION AND CONTACT FORCE IN BAYONET LAMPHOLDERS
CALIBRES POUR LA VERIFICATION DE LA POSITION DU CONTACT ET DE LA FORCE DE CONTACT DANS LES DOUILLES A BAIONNETTE
B15d

Dimensions in millimetres - Dimensions en millimètres

ESSAI:

a) Vérification de la dimension Dmax.

Le calibre intéressé maintenu fermement dans la douille et les deux ergots maintenus contre les points de repos correspondants, le plongeur est introduit à l'intérieur de l'évidement du calibre jusqu'à ce qu'il touche un des contacts de la douille. La douille étant tenue de telle sorte que son axe soit vertical et le calibre étant maintenu au-dessus, le repère Z1 sur le plongeur doit coïncider avec le repère de référence figurant sur le corps du calibre ou être au-dessus. Durant cet essai, aucune force ne doit être appliquée au plongeur.

L'essai est répété pour l'autre contact de la douille.

b) Vérification des forces de contact minimale et maximale.

Le calibre concerné étant introduit dans la douille comme ci-dessus en a), une force axiale est appliquée au plongeur jusqu'à ce que le repère Z2 coïncide avec le repère de référence figurant sur le corps du calibre. A cette position, la force sera mesurée et ne doit pas être inférieure à la force minimale spécifiée dans le tableau 3 de la CEI 61184.

La force est alors augmentée jusqu'à ce que la repère Z3 coïncide avec le repère de référence. A cette position, la force sera mesurée et ne doit pas être supérieure à la force maximale spécifiée dans le tableau 3 de la CEI 61184.

L'essai est répété pour l'autre contact de la douille.

Copyright National Electrical Manufacturers Association
Provided by IHS under license with NEMA
No reproduction or networking permitted without license from IHS

Not for Resale

"GO" GAUGE FOR CAP ON FINISHED LAMPS
CALIBRE "ENTRE" POUR CULOT SUR LAMPES TERMINEES
BY22d

Dimensions in millimetres - Dimensions en millimètres

The drawing is intended only to illustrate the essential dimensions of the gauge.
Le dessin a pour seul but d'illustrer les dimensions essentielles du calibre.

For details of cap BY22d, see sheet 7004-17.
Pour les détails du culot BY22d, voir feuille 7004-17.

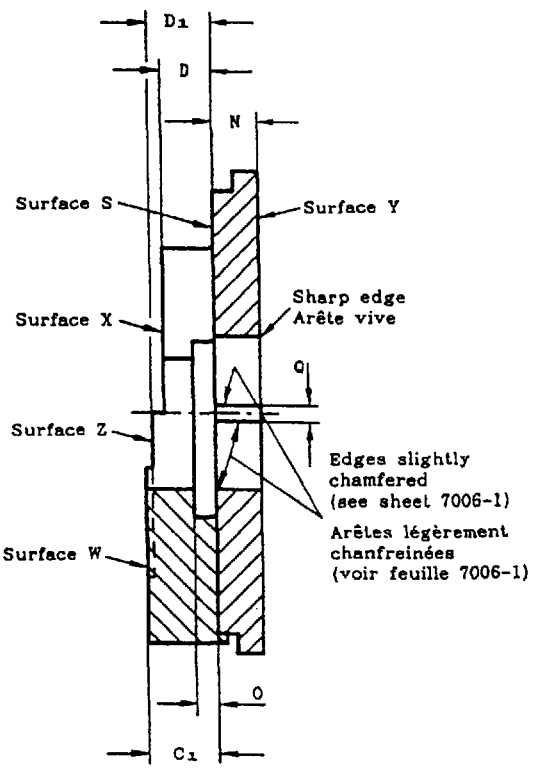

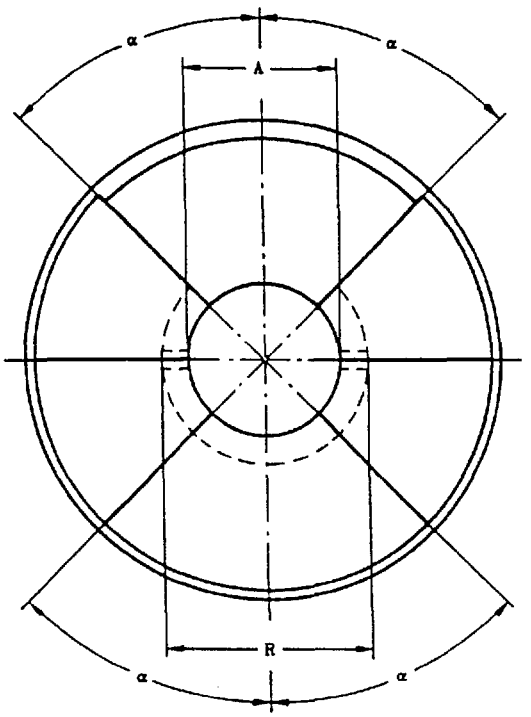

PURPOSE: To check dimensions A max., C_1 max., D_1 max., N min. and the diametrical position of the pins of cap BY22d on finished lamps.

TESTING: The cap shall enter the gauge at surface Y until the pins have passed through the slots Q. The cap is then rotated through a small angle and pulled so that the pins are in close contact with surface S. In this position, the contact making surfaces shall not be below surface X nor shall they project beyond surface Z and the extreme end of the cap shall not project beyond surface W. Dimension N of the gauge checks the diameter of the cap for a sufficient length to ensure interchangeability of the cap in the holders.

Reference	Dimension	Tolerance
A	22,0	+ 0,01 - 0,0
C_1	10,2	+ 0,02 - 0,0
D	7,5	+ 0,0 - 0,01
D_1	9,0	+ 0,02 - 0,0
N	6,7	+ 0,0 - 0,01
O	3,05	+ 0,0 - 0,05
Q	2,5	+ 0,0 - 0,04
R	29,5	+ 0,0 - 1,0
α	Approx. 45°	-

BUT: Vérification des dimensions A max., C_1 max., D_1 max., N min. et de la position diamétrale des ergots du culot BY22d sur lampes terminées.

ESSAI: Le culot doit entrer dans le calibre du côté de la surface Y jusqu'à ce que les ergots aient traversé les encoches Q. Le culot est alors tourné d'un petit angle et appliqué de manière que les ergots soient en contact étroit avec la surface S. Dans cette position, les surfaces de contact doivent émerger de la surface X, mais ne doivent pas émerger de la surface Z et l'extrémité du culot ne doit pas émerger de la surface W. La dimension N du calibre vérifie le diamètre du culot sur une longueur suffisante pour assurer l'interchangeabilité du culot par rapport aux douilles.

Copyright National Electrical Manufacturers Association
Provided by IHS under license with NEMA
No reproduction or networking permitted without license from IHS
Not for Resale

PLUG GAUGE FOR LAMPHOLDERS

CALIBRE TAMPON POUR DOUILLES

BY22d

Dimensions in millimetres - Dimensions en millimètres

The drawing is intended only to illustrate the essential dimensions of the gauge.
Le dessin a pour seul but d'illustrer les dimensions essentielles du calibre.

For details of lampholder BY22d, see sheet 7005-17.
Pour les détails de la douille BY22d, voir feuille 7005-17.

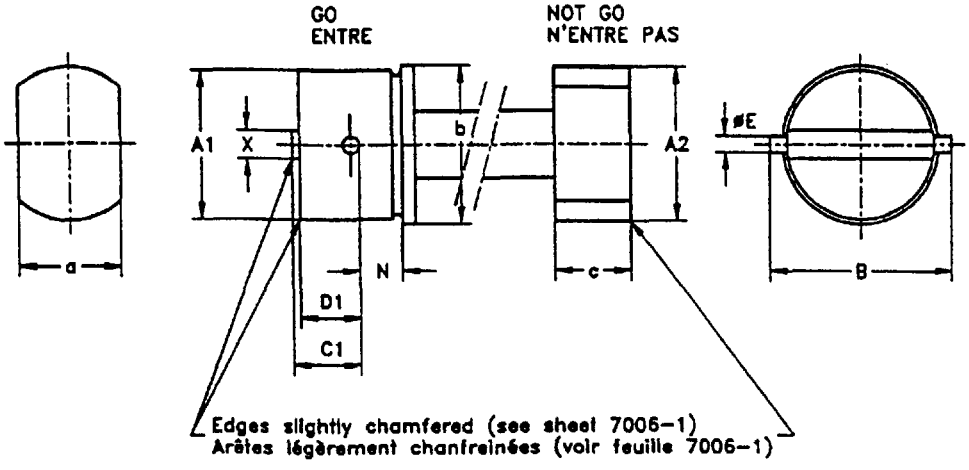

Reference	Dimension	Tolerance
A1	22,3	+ 0,0 - 0,01
A2	23,0	+ 0,01 - 0,0
B	27,65	+0,0 - 0,01
C1	10,23	+ 0,0 - 0,01
D1	9,03	+ 0,0 - 0,01
E	2,5	+ 0,01 - 0,0
N	6,5	+ 0,02 - 0,0
X	4,23	+ 0,0 - 0,01
a	15,5	+ 1,0 - 0,0
b	23,7	+ 0,5 - 0,0
c	11,5	+ 1,0 - 0,0
Mass Masse	0,3 kg	+ 10 % - 10 %

PURPOSE: To check dimensions Amin., Amax., Bmin., C1min., D1min., Nmax. and the diametrical position of the slots of lampholders BY22d.

TESTING: It shall be possible to insert the "Go" side of the gauge into the lampholder and turn it so that the pins pass the lowest points of the retaining slots without using undue force.
It shall not be possible to insert the "Not Go" side of the gauge by its own weight.
This test shall be made at least twice, the gauge being turned through approximately 90° the second time.

BUT: Vérification des dimensions Amin., Amax., Bmin., C1min., D1min., Nmax. et de la position diamétrale des encoches des douilles BY22d.

ESSAI: Il doit être possible d'insérer le côté «Entre» du calibre dans la douille et de le tourner de façon que les ergots passent sous les points les plus bas des encoches de maintien sans excercer un effort anormal.
Il ne doit pas être possible d'insérer le côté «N'entre pas» du calibre sous l'effet de son propre poids.
Cet essai doit être effectué au moins deux fois, le calibre étant, la deuxième fois, tourné d'un angle d'environ 90°.

Copyright National Electrical Manufacturers Association
Provided by IHS under license with NEMA
No reproduction or networking permitted without license from IHS

Not for Resale

Threaded "Go" Gauge for E5 Midget-Screw-Based Lamps

The drawing is intended only to illustrate essential dimensions of the gauge.

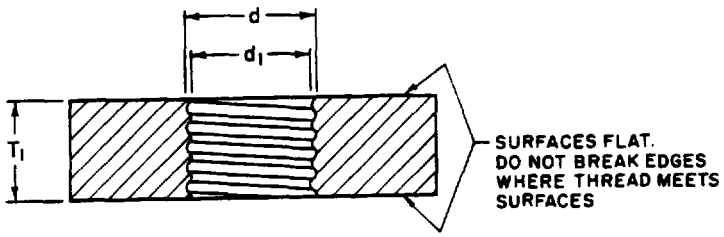

Reference	Dimension in	Tolerance in	Nearest Metric Equivalent mm
T_1	0.213	–0.0003	5.41
d	0.210	+0.0012	5.33
d_1	0.188	+0.0012	4.77

The form of the screw threads shall be in accordance with the dimensions shown in ANSI C81.61, Standard Sheet 1-100.

Purpose
To check the threaded length (dimension T_1) and the maximum thread diameter of the bases.

For details of E5 bases, see ANSI C81.61, Standard Sheet 1-100.

Testing
Screw the lamp into the gauge and check the position of the contact.

Remove the lamp counting the number of turns for disengagement.

Copyright National Electrical Manufacturers Association
Provided by IHS under license with NEMA
No reproduction or networking permitted without license from IHS Not for Resale

"Not-Go" Gauge for E5 Midget-Screw-Based Lamps

The drawing is intended only to illustrate essential dimensions of the gauge.

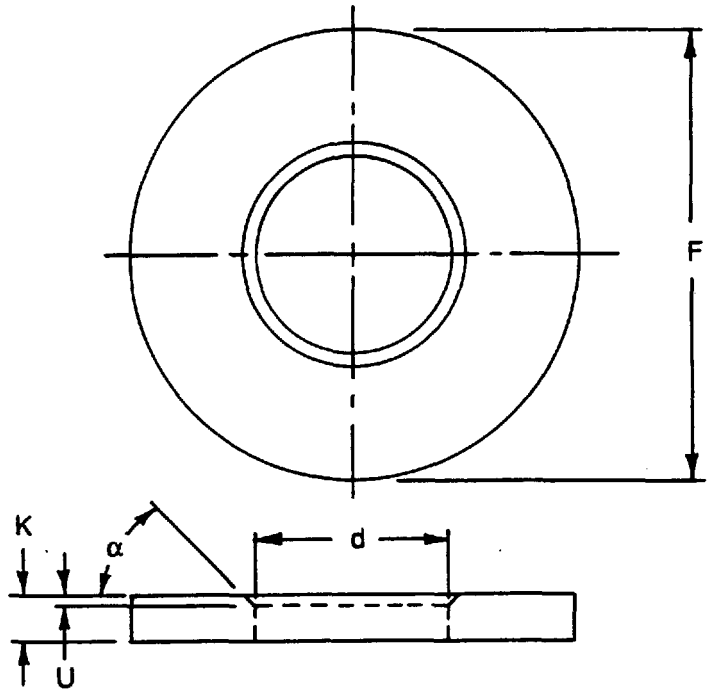

Reference	Dimension in	Tolerance in	Metric equivalent mm
F	1.125	approx	28.58
K	0.170	±0.005	4.32
U	0.010	±0.003	0.25
d	0.206	−0.0003	5.23
α (degrees)	45°	nominal	45°

The weight of the gauge shall be at least 17 grams and not more than 21 grams.

Purpose
To check the minimum major diameter of the screw threads on finished lamps.

For details of E5 bases, see ANSI C81.61, Standard Sheet 1-100.

Testing
Place the gauge over the base thread of a finished lamp held base up and check the position of the center contact relative to the opposite surface of the gauge.

The gauge may be used on unmounted bases.

Copyright National Electrical Manufacturers Association
Provided by IHS under license with NEMA
No reproduction or networking permitted without license from IHS Not for Resale

Threaded "Go" Gauge for E5 Midget-Screw Lampholders

The drawing is intended only to illustrate the essential dimensions of the gauge.

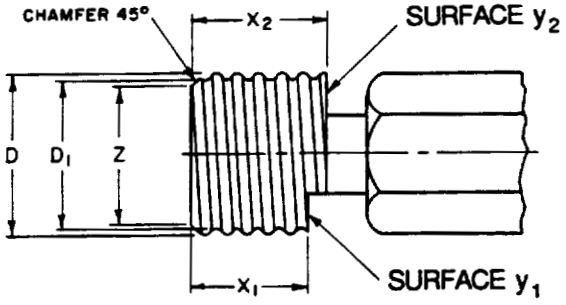

Reference	Dimension in	Tolerance in	Nearest metric equivalent mm
D	0.212	–0.0012	5.38
D_1	0.190	–0.0012	4.83
X_1	0.191	–0.001	4.85
X_2	0.211	+0.001	5.36
Z	0.152	–0.010	3.86

NOTES

1 The form of the screw threads shall be in accordance with the dimensions shown in ANSI C81.62, Standard Sheet 2-100.

2 The sharp part of the edge of the thread at the underside of the gauge shall be broken with a radius of approximately 0.020 in (0.50 mm).

Purpose
To check the minimum dimensions of the screw thread of a lampholder and the minimum and maximum values of dimension X.

Testing
Screw the gauge into the lampholder and check the position of the rim of the screwshell relative to surfaces y_1 and y_2.

Copyright National Electrical Manufacturers Association
Provided by IHS under license with NEMA
No reproduction or networking permitted without license from IHS
Not for Resale

"Not-Go" Plug Gauge for E5 Midget-Screw Lampholders

The drawing is intended only to illustrate essential dimensions of the gauge.

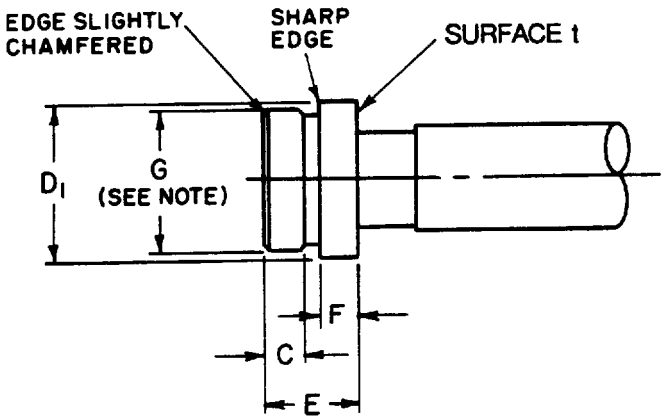

Reference	Dimension in	Tolerance in	Nearest metric equivalent mm
C	0.050	−0.003	1.27
D_1	0.194	+0.0005	4.93
E	0.120	±0.005	3.05
F	0.050	−0.002	1.27
G (Note)	0.188	−0.001	4.78

NOTE – For centering purposes only.

Mass lb		Nearest metric equivalent g	
Min	**Max**	**Min**	**Max**
0.013	0.022	6	10

Purpose
To check the maximum minor diameter D_1 of the screw threads of midget-screw lampholders.

For details of E5 lampholders, see ANSI C81.62, Standard Sheet 2-100.

Testing
Attempt to insert the gauge into the lampholder and check the position of the threads relative to surface t.

Copyright National Electrical Manufacturers Association
Provided by IHS under license with NEMA
No reproduction or networking permitted without license from IHS
Not for Resale

"Not-Go" Ring Gauge for E10 Miniature-Screw-Based Lamps and Unmounted Bases

The drawing is intended only to illustrate essential dimensions of the gauge.

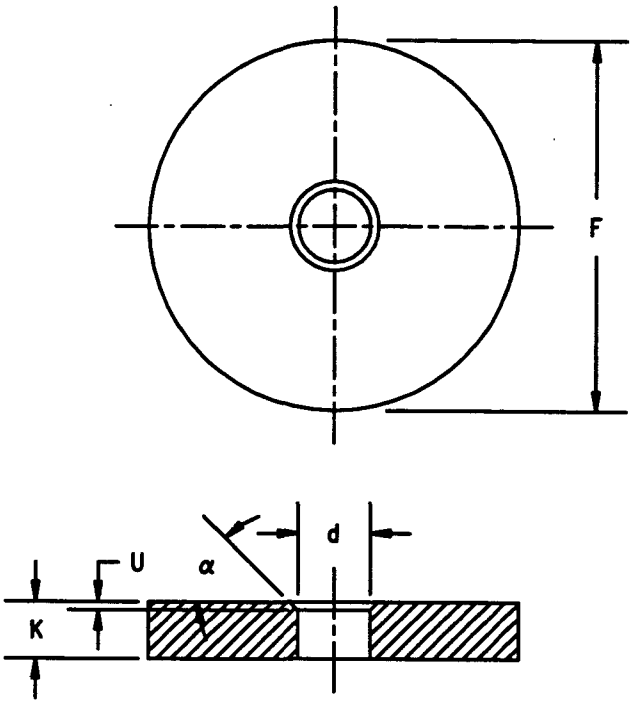

Reference	Dimension in	Tolerance in	Nearest metric equivalent mm
F	1.9	Approx.	49
K	0.295	+0.002	7.5
U	0.039	-0.004	1.0
d	0.365	-0.0004	9.27
α (degrees)	45°	nominal	45°

Mass lb	Tolerance	Nearest metric equivalent g
0.18	±10%	80

Copyright © 1997 by National Electrical Manufacturers Association
1300 North 17th Street, Suite 1847, Rosslyn, VA 22209

First Edition
December 1997

Copyright National Electrical Manufacturers Association
Provided by IHS under license with NEMA
No reproduction or networking permitted without license from IHS
Not for Resale

Purpose

To check the minimum major diameter of the screw threads on finished lamps and unmounted bases.

For details of E10 bases, see ANSI C81.61, Standard Sheet 1-111.

Testing

Place the gauge on the base threads of a finished lamp, hold base up, and check the position of the center contact relative to the opposite surface of the gauge.

Copyright © 1997 by National Electrical Manufacturers Association
1300 North 17th Street, Suite 1847, Rosslyn, VA 22209

First Edition
December 1997

Copyright National Electrical Manufacturers Association
Provided by IHS under license with NEMA
No reproduction or networking permitted without license from IHS
Not for Resale

Threaded Gauge for Testing Contact-Making of E10 Miniature-Screw-Based Lamps

The drawing is intended only to illustrate essential dimensions of the gauge.

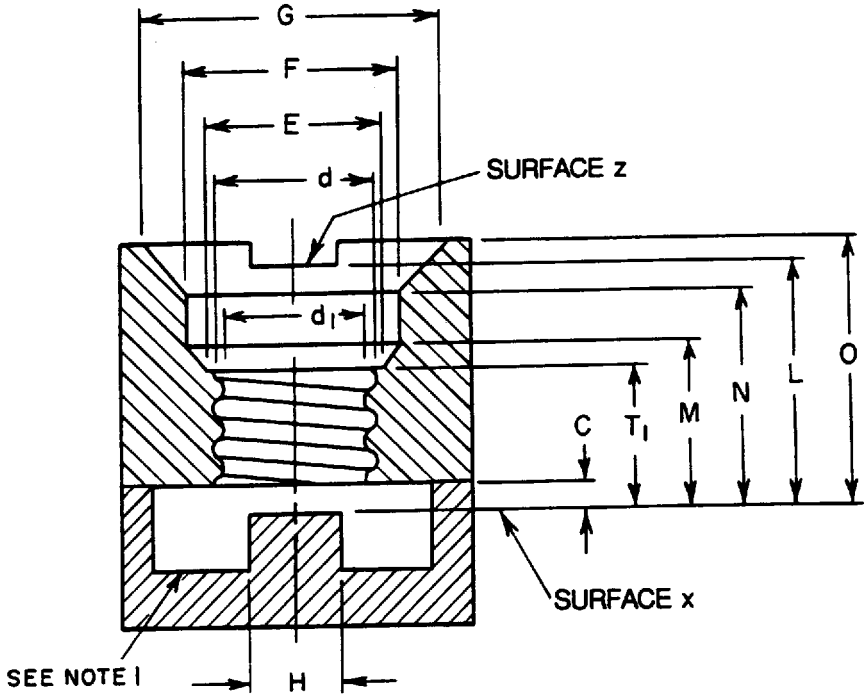

Reference	Dimension in	Tolerance in	Nearest metric equivalent mm
C	0.070	−0.001	1.78
E (dia)	0.400	−0.0005	10.16
F (dia)	0.477	−0.0005	12.12
G (dia)	0.683	−0.0005	17.35
H (dia)	0.187	±0.001	4.75
L	0.563	+0.001	14.30
M	0.375	+0.001	9.52
N	0.491	+0.001	12.47
O	0.594	+0.001	15.09
T_1	0.320	−0.0005	8.13
d (dia)	0.3765	+0.0012	9.563
d_1 (dia)	0.3365	+0.0012	8.547

NOTES

1 Two inspection windows, 180 degrees apart.

2 Edge of starting thread should not be broken.

Copyright National Electrical Manufacturers Association
Provided by IHS under license with NEMA
No reproduction or networking permitted without license from IHS
Not for Resale

The form of the screw threads shall be in accordance with the dimensions shown in ANSI C81.61, Standard Sheet 1-111.

Purpose
To check the following dimensions and contours of finished lamps having E10 *miniature screw* bases:

a) the contour of the bulb shoulder and adjacent portion of the base;

b) the thread dimensions;

c) threaded length;

d) number of effective threads;

e) the projection of solder from the skirt of the base;

f) the overall length of the base, including eyelet solder.

For details of E10 bases, see ANSI C81.61, Standard Sheet 1-111.

Testing
Screw the lamp into the gauge and check for contact at surface x. Check for any protrusion of conductive material above surface z.

Copyright National Electrical Manufacturers Association
Provided by IHS under license with NEMA
No reproduction or networking permitted without license from IHS
Not for Resale

Threaded "Go" Gauge for E10 Miniature-Screw Lampholders

The drawing is intended only to illustrate essential dimensions of the gauge.

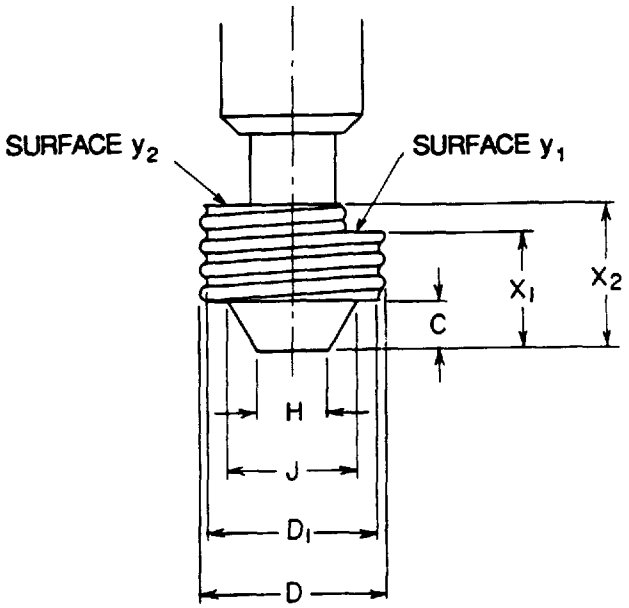

Reference	Dimension in	Tolerance in	Nearest metric equivalent mm
C	0.059	−0.002	1.5
D	0.3775	−0.0012	9.59
D_1	0.3375	−0.0012	8.57
H	0.187	−0.002	4.75
J	0.300	−0.002	7.62
X_1	0.272	−0.001	6.9
X_2	0.311	+0.001	7.9

NOTES

1 The form of the screw threads shall be in accordance with the dimensions shown in ANSI C81.62, Standard Sheet 2-111.

2 The sharp part of the edge of the thread at the underside of the gauge shall be broken with a radius of approximately 0.020 in (0.50 mm).

Purpose
To check the minimum dimensions of the lampholder screw thread and the minimum and maximum values of dimension X.

For details of E10 lampholders, see ANSI C81.62, Standard Sheet 2-111.

Testing
Screw this gauge into the lampholder and check the position of the rim of the screw shell relative to surface y_1 and y_2.

Copyright National Electrical Manufacturers Association
Provided by IHS under license with NEMA
No reproduction or networking permitted without license from IHS
Not for Resale

"Not-Go" Plug Gauge for E10 Miniature-Screw Lampholders

The drawing is intended only to illustrate essential dimensions of the gauge.

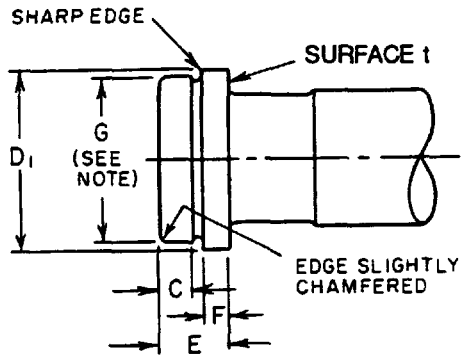

Reference	Dimension in	Tolerance in	Nearest metric equivalent mm
C	0.080	−0.003	2.03
D_1	0.3435	+0.0005	8.72
E	0.200	±0.005	5.08
F	0.080	−0.002	2.03
G (Note)	0.335	−0.001	8.51
NOTE – For centering purposes only.			

Mass lb		Nearest Metric Equivalent g	
Min	**Max**	**Min**	**Max**
0.039	0.170	63	77

Purpose
To check the maximum of screw thread diameter D_1 of E10 miniature-screw lampholders.

For details of E10 lampholders, see ANSI C81.62, Standard Sheet 2-111.

Testing
Attempt to insert the gauge into the lampholder and check the position of the threads relative to surface t.

Copyright National Electrical Manufacturers Association
Provided by IHS under license with NEMA
No reproduction or networking permitted without license from IHS
Not for Resale

Threaded Gauge for Testing Contact-Making of E10 Miniature-Screw Lampholders

The drawing is intended only to illustrate essential dimensions of the gauge.

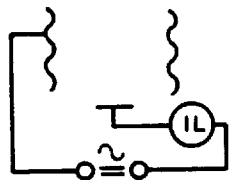

TEST CIRCUIT

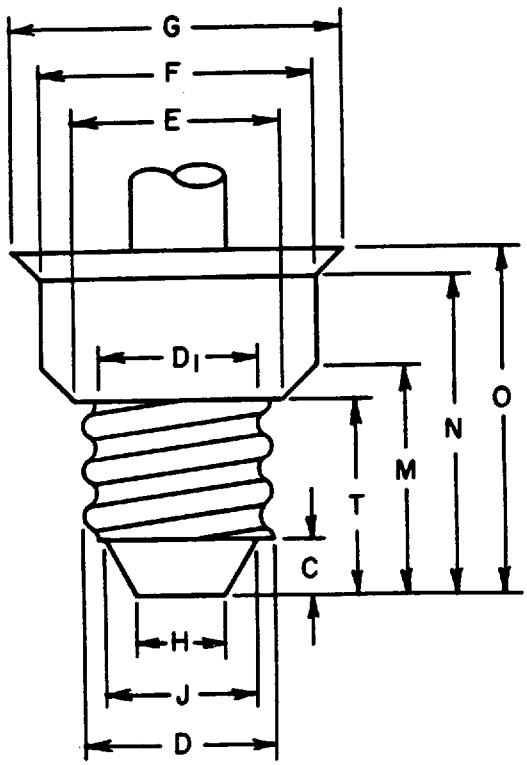

Reference	Dimension in	Tolerance in	Nearest metric equivalent mm
C	0.059	−0.002	1.50
D (dia)	0.3765	+0.0012	9.563
D_1 (dia)	0.3365	+0.0012	8.547
E (dia)	0.400	+0.0005	10.16
F (dia)	0.477	+0.0005	12.12
G (dia)	0.683	+0.0005	17.35
H (dia)	0.187	−0.002	4.75
J (dia)	0.300	−0.002	7.62
M	0.375	−0.001	9.52
N	0.491	−0.001	12.47
O	0.594	−0.001	15.09
T	0.320	−0.0005	8.13

The form of the screw threads shall be in accordance with the dimensions shown in ANSI C81.62, Standard Sheet 2-111.

Copyright National Electrical Manufacturers Association
Provided by IHS under license with NEMA
No reproduction or networking permitted without license from IHS
Not for Resale

ANSI C81.63-1991
Std Sheet 3-117-1

Purpose
To check lampholder dimensions for contact-making with a finished lamp.

For details of E10 lampholders, see ANSI C81.62, Standard Sheet 2-111.

Testing
Screw the gauge into the lampholder and check the indicator lamp. Also, check for clearance between the gauge and the upper edge of the lampholder.

Copyright National Electrical Manufacturers Association
Provided by IHS under license with NEMA
No reproduction or networking permitted without license from IHS
Not for Resale

Threaded "Go" Gauge for E11 Mini-Can Screw-Based Lamps and Unmounted Bases

The drawing is intended only to indicate the essential dimensions of the gauge.

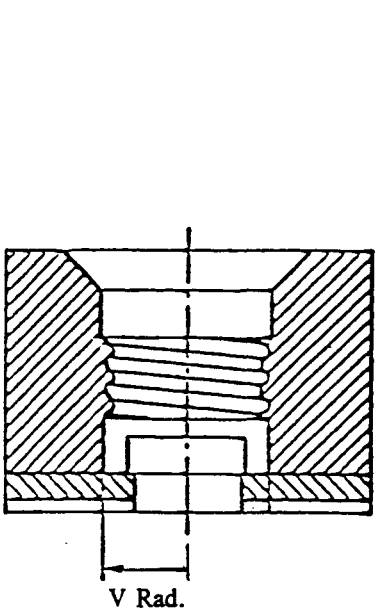

Section II-II

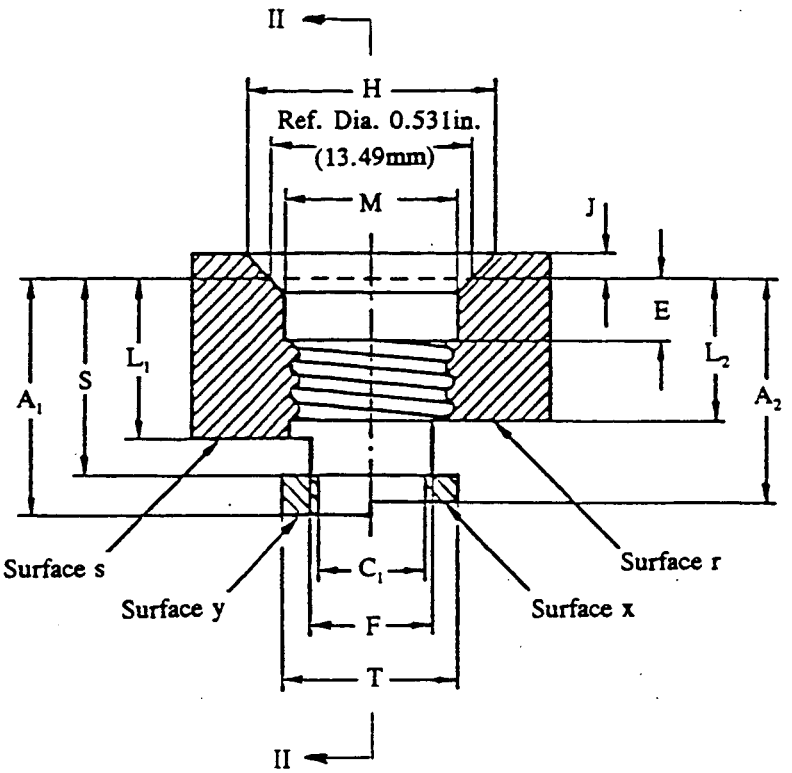

Section I-I

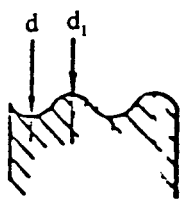

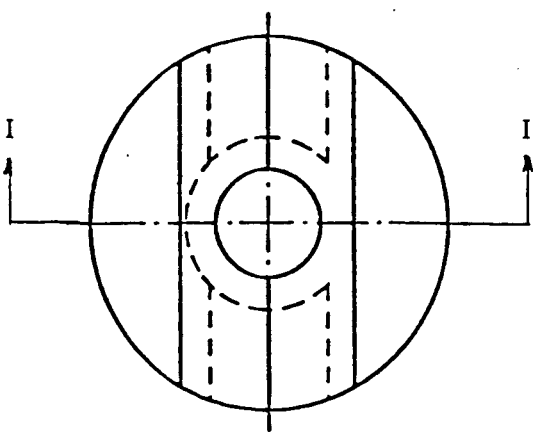

Copyright National Electrical Manufacturers Association
Provided by IHS under license with NEMA
No reproduction or networking permitted without license from IHS
Not for Resale

Reference	Dimension (inch)	Tolerance (inch)	Nearest Metric Equivalent (millimeters)
A_1	0.615	+0.001	15.62
A_2	0.550	-0.001	13.97
C_1	0.276	+0.005	7.0
E	0.161	+0.001	4.09
F	0.314	±0.005	8.0
H	0.654	+0.001	16.63
J	0.062	-0.001	1.57
L_1	0.415	+0.001	10.54
L_2	0.370	-0.001	9.40
M	0.465	+0.001	11.81
S	0.512	±0.001	13.0
T	0.456	±0.001	11.6
V (rad.)(Note 1)	0.216	+0.005	5.5
d	0.425	+0.0012	10.80
d_1	0.385	+0.0012	9.78

NOTES
1 Dimension V represents a clearance area below the cut of the screw threads.
2 The sharp part of the edge of the thread shall be broken with a radius of 0.2mm to 0.3mm (0.008in. to 0.012in.).

Purpose

To check the maximum dimensions of the screw thread diameter d and d_1 and dimensions L_{min}, L_{max}, A_{min}, and A_{max} of a base on a finished lamp or unmounted base.

Testing

Screw the lamp or unmounted base into the gauge while measuring the torque required to seat the lamp. Check that the sloping shoulder of the base seats against the 45° shoulder of the gauge, the relationship of the bottom of the metal shell with surface r and s and the position of the center contact with respect to surface x and y of the gauge.

Remove the lamp or unmounted base and count the number of turns for disengagement.

Compare the observed and measured results to the limits specified in ANSI C81.61, standard sheet 1-123.

Copyright National Electrical Manufacturers Association
Provided by IHS under license with NEMA
No reproduction or networking permitted without license from IHS
Not for Resale

"Go" and Contact-Making Gauge "B" for E11 Mini-Can Screw Lampholders

The drawing is intended only to indicate the essential dimensions of the gauge.

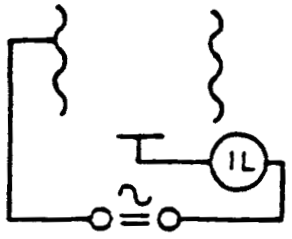

TEST CIRCUIT

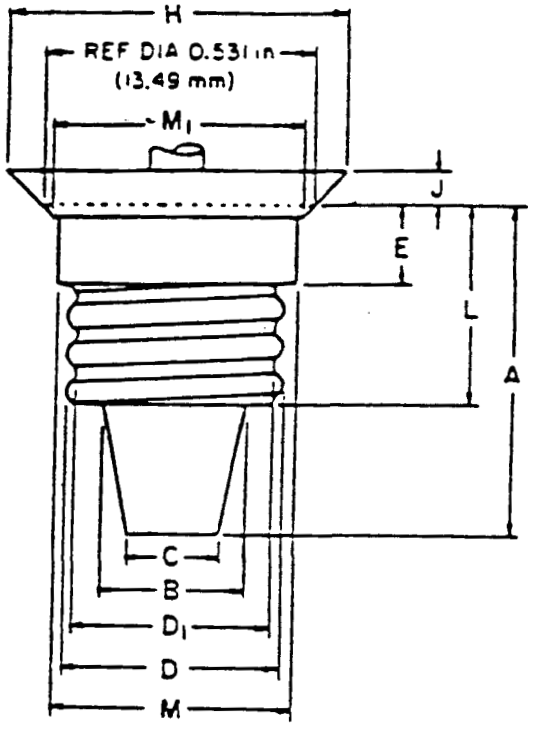

Copyright National Electrical Manufacturers Association
Provided by IHS under license with NEMA
No reproduction or networking permitted without license from IHS
Not for Resale

Reference	Dimension (inch)	Tolerance (inch)	Nearest Metric Equivalent (millimeters)
A	0.548	+0.001	13.84
B	0.244	-0.001	6.2
C (Note 1)	0.140	-0.001	3.56
D	0.4275	-0.0003	10.86
D_1	0.3875	-0.0003	9.84
E	0.138	-0.001	3.5
H	0.654	-0.001	16.63
J	0.062	+0.001	1.57
L	0.368	-0.001	9.35
M	0.425	-0.001	10.8
M_1	0.479	-0.001	12.17

NOTE
1 In IEC this dimension is 2.8mm.

The form of the screw threads shall be in accordance with the dimensions shown on ANSI C81.62 Std. Sheet 2-123.

Purpose

To check lampholder dimensions for acceptance and contact-making of a base with maximum thread diameters and minimum length.

For details of the E11 lampholder, see ANSI C81.62, Std. Sheet 2-123.

Testing

Screw the gauge fully into the lampholder while measuring the torque. Check the relationship of the sloping shoulder of the gauge to the tapered surface of the lampholder and observe the indicator lamp.

Compare the observed and measured results with the limits specified in ANSI C81.62, Std. Sheet 2-123.

Copyright National Electrical Manufacturers Association
Provided by IHS under license with NEMA
No reproduction or networking permitted without license from IHS
Not for Resale

"Go" and Contact-Making Gauge "A" for E11 Mini-Can Screw Lampholders

The drawing is intended only to indicate the essential dimensions of the gauge.

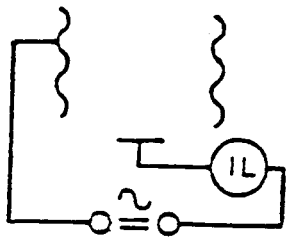

TEST CIRCUIT

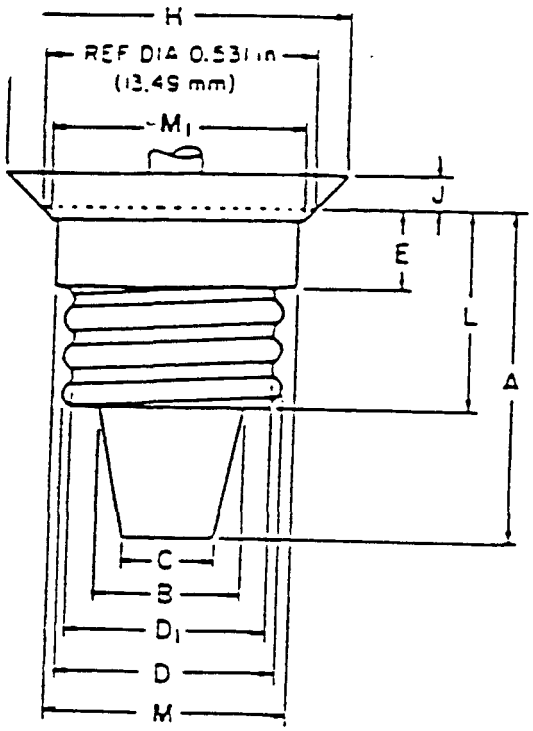

Copyright National Electrical Manufacturers Association
Provided by IHS under license with NEMA
No reproduction or networking permitted without license from IHS
Not for Resale

Reference	Dimension (inch)	Tolerance (inch)	Nearest Metric Equivalent (millimeters)
A	0.617	-0.001	15.67
B	0.314	-0.001	8.0
C (Note 1)	0.140	-0.001	3.56
D	0.4275	-0.0012	10.86
D_1	0.3875	-0.0012	9.84
E	0.163	-0.001	4.14
H	0.654	-0.001	16.63
J	0.062	+0.001	1.57
L	0.417	-0.001	10.60
M	0.467	-0.001	11.86
M_1	0.479	-0.001	12.17

NOTE
1 In IEC this dimension is 4.01mm.

The form of the screw threads shall be in accordance with the dimensions shown on ANSI C81.62 Std. Sheet 2-123.

Purpose

To check lampholder dimensions for acceptance and contact-making of a base with maximum thread diameters and maximum length.

For details of the E11 lampholder, see ANSI C81.62 standard sheet 2-123.

Testing

Screw the gauge fully into the lampholder while measuring the torque. Check the relationship of the sloping shoulder of the gauge to the tapered surface of the lampholder, the position of the holder with respect to the top surface of the gauge and observe the indicator lamp.

Compare the observed and measured results with the limits specified in ANSI C81.62, standard sheet 2-123.

Copyright National Electrical Manufacturers Association
Provided by IHS under license with NEMA
No reproduction or networking permitted without license from IHS
Not for Resale

Threaded "Go" Gauge for E12 Candelabra Screw Based Lamps

ANSI C81.63a-1993
Std Sheet 3-130-2

The drawing is intended only to illustrate essential dimensions of the gauge.

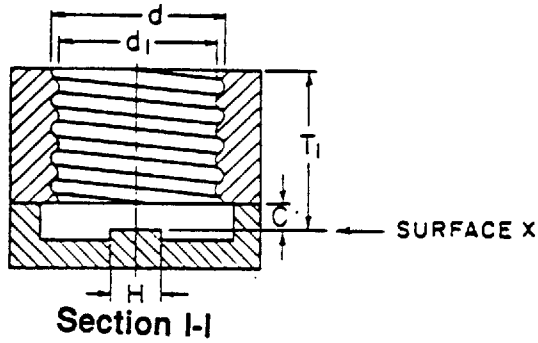

Section I-I

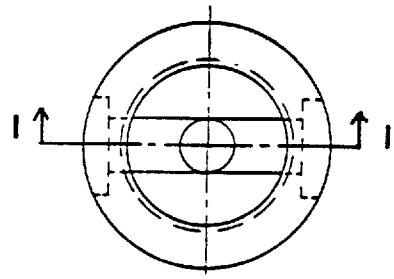

Reference	Dimension (inch)	Tolerance (inch)	Nearest Metric Equivalent (millimeters)
C	0.063	-0.001	1.60
H	0.187	±0.001	4.75
T_1	0.440	-0.001	11.17
d	0.468	+0.0012	11.887
dl	0.418	+0.0012	10.617

The form of the screw threads shall be in accordance with the dimensions shown on ANSI C81.61-1991, Standard Sheet 1-131.

Purpose
To check thread diameter (dimensions d and d_1) and threaded length (dimension T_1) of E12 candelabra screw bases on finished lamps.

Testing
Screw the lamp into the gauge and check for contact at surface X. Remove the lamp, counting the number of turns for disengagement.

Copyright National Electrical Manufacturers Association
Provided by IHS under license with NEMA
No reproduction or networking permitted without license from IHS
Not for Resale

"Go" Ring Gauge for E12 Candelabra Screw-Based Lamps

ANSI C81.63a-1993
Std Sheet 3-131-1

The drawing is intended only to illustrate the essential dimensions of the gauge.

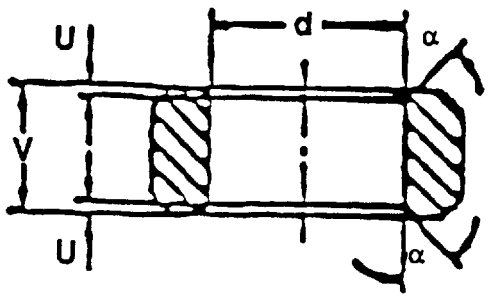

Reference	Dimension (inch)	Tolerance (inch)	Nearest Metric Equivalent (millimeters)
U	0.002	±0.004	0.05
V	0.276	±0.008	7.00
d	0.468	±0.0002	11.887
α	45° approx.		45° approx.

Purpose
To check the maximum outside (major) diameter, dimension d, of E12 candelabra bases on finished lamps.

Testing
Check to see if the gauge passes over the threads of the base.

Copyright National Electrical Manufacturers Association
Provided by IHS under license with NEMA
No reproduction or networking permitted without license from IHS
Not for Resale

"Not-Go" Ring Gauge for E12 Candelabra Screw Based Lamps

ANSI C81.63a-1993
Std Sheet 3-132-2

The drawing is intended only to illustrate essential dimensions of the gauge.

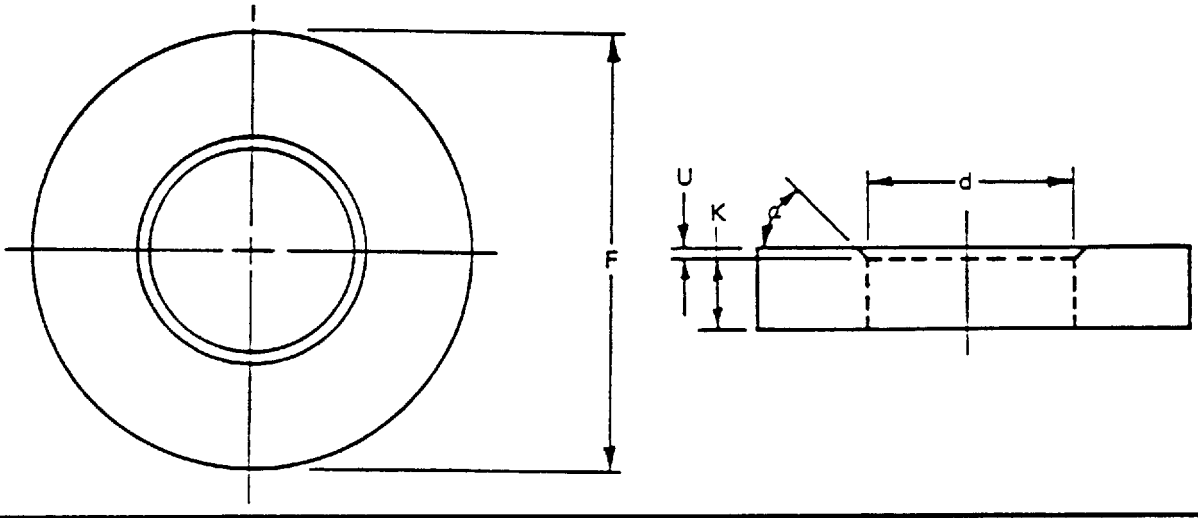

Reference	Dimension (inch)	Tolerance (inch)	Nearest Metric Equivalent (millimeters)
F	1.8	Approx	46
K	0.335	+0.005	6.35
d	0.455	-0.0003	11.56
U	0.039	±0.005	1.0
	45	Nominal	450

Mass (pound)	Tolerance	Nearest Metric Equivalent (grams)
0.20	±10%	90

Purpose
To check the minimum major diameter of the screw threads on finished lamps. For details of E12 bases, see ANSI C81.61-1991, Standard Sheet 1-131.

Testing
Place the chamfered end of the gauge over the base threads of a finished lamp held base-up and check the position of the center contact relative to the opposite surface of the gauge.
NOTE: This gauge may also be used for unmounted bases.

Copyright National Electrical Manufacturers Association
Provided by IHS under license with NEMA
No reproduction or networking permitted without license from IHS
Not for Resale

Gauge for Testing Contact Making of E12 Candelabra Screw-Based Lamps

ANSI C81.63a-1993
Std Sheet 3-133-2

The drawing is intended only to illustrate essential dimensions of the gauge.

The gauge is for use with general purpose, Christmas, and decorative lamps.

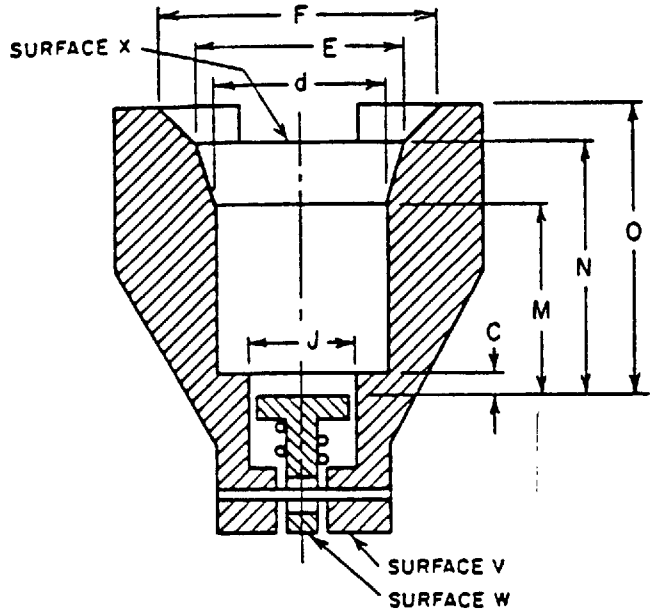

NOTE: The plunger of the gauge is shown in the test position. When the plunger is at rest, surface W shall be retracted deeper than surface V.

Reference	Dimension (inch)	Tolerance (inch)	Nearest Metric Equivalent (millimeters)
C	0.063	+0.001	1.60
E (dia)	0.562	-0.001	14.27
F (dia)	0.750	-0.001	19.05
J (dia)	0.300	+0.001	7.62
M	0.520	+0.001	13.21
N	0.687	+0.001	17.45
O	0.781	+0.001	19.84
d	0.470	-0.0002	11.94

Purpose

To check the lamp dimensions, particularly the combination of base length and bulb shoulder shape, for their effect on contact making in the lampholder.

For details of the E12 candelabra screw base, see ANSI C81.61-1991, Standard Sheet 1-131.

Testing

Push the base of a lamp into the gauge until it stops and check the relationship of surfaces W and V. Also, check the presence of any conductive material above surface X.

Copyright National Electrical Manufacturers Association
Provided by IHS under license with NEMA
No reproduction or networking permitted without license from IHS
Not for Resale

Threaded "Go" Gauge for E12 Candelabra Screw Lampholders

The drawing is intended only to illustrate essential dimensions of the gauge.

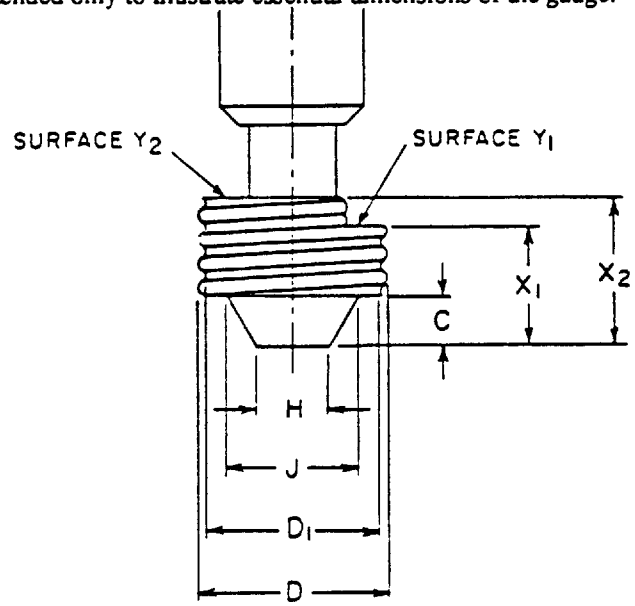

Reference	Dimension (inch)	Tolerance (inch)	Nearest Metric Equivalent (millimeters)
C	0.059	-0.002	1.50
D	0.470	-0.0012	11.938
D_1	0.420	-0.0012	10.668
H	0.187	-0.002	4.75
J	0.305	-0.002	7.75
X_1	0.375	-0.001	9.53
X_2	0.440	+0.001	10.41

The sharp part of the edge of the thread at the underside of the gauge shall be broken with a radius of approximately 0.5 mm.

The form of the E12 lampholder screw threads shall be in accordance with the dimensions shown on ANSI C81.62-1991, Standard Sheet 2-131.

Purpose
To check the minimum dimensions of the lampholder screw thread and the minimum and maximum values of dimension X.

Testing
Screw the gauge into the lampholder and check the position of the threaded portion of the holder relative to surface Y_1 and Y_2.

Copyright National Electrical Manufacturers Association
Provided by IHS under license with NEMA
No reproduction or networking permitted without license from IHS
Not for Resale

"Not Go" Plug Gauge for E12 Candelabra Screw Lampholders

ANSI C81.63a-1993
Std Sheet 3-137-2

The drawing is intended only to illustrate essential dimensions of the gauge.

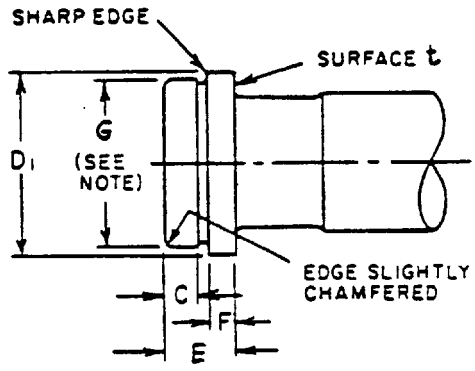

Reference	Dimension (inch)	Tolerance (inch)	Nearest Metric Equivalent (millimeters)
C	0.110	-0.003	2.80
D_1	0.426	+0.0005	10.82
D_2 (Note)	0.418	-0.001	10.62
K	0.250	±0.005	6.35
K_1	0.110	-0.002	2.80

Mass (pounds)	Tolerance	Nearest Metric Equivalent (grams)
3.35	±10%	95

NOTE: For centering purposes only.

Purpose

To check the maximum minor diameter D_1 of the screw threads of E12 candelabra screw lampholders.

For details of the E12 candelabra screw lampholder, see ANSI C81.62-1991, Standard Sheet 2-131.

Testing

Attempt to insert the gauge into the lampholder and check the position of the thread relative to surface T.

Copyright National Electrical Manufacturers Association
Provided by IHS under license with NEMA
No reproduction or networking permitted without license from IHS
Not for Resale

Threaded Gauge for Testing Contact Making of E12 Candelabra Screw Lampholders

ANSI C81.63a-1993
Std Sheet 3-138-2

The drawing is intended only to illustrate essential dimensions of the gauge.

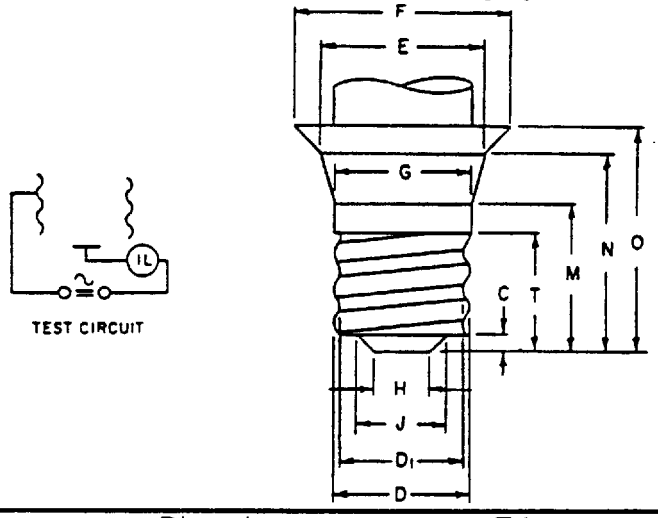

Reference	Dimension (inch)	Tolerance (inch)	Nearest Metric Equivalent (millimeters)
C	0.063	-0. 002	1.60
D (dia)	0.468	+0.0012	11.89
D_1 (dia)	0.418	+0.0012	10.62
E (dia)	0.562	+0.001	14.27
F (dia)	0.750	+0.001	19.05
G	0.470	+0.001	11.94
H (dia)	0.187	-0.002	4.75
J	0.305	-0.002	7.75
M	0.520	-0.001	13.21
N	0.687	-0.001	17.45
O	0.781	-0.001	19.84
T	0.440	-0.0005	11.17

The form of the screw threads shall be in accordance with the dimension shown on ANSI C81.62-1991, Standard Sheet 2-131.

The gauge shall be made of metal with the exception of an insulated handle at the top.

Purpose
To check lampholder dimensions for contact making with a finished lamp.

For details of E12 candelabra screw lampholders, see ANSI C81.62-1991, 2-131.

Testing
Screw the gauge fully into the lampholder and check the indicator lamp. Also, check the clearance between the gauge and the upper edge of the holder.

Copyright National Electrical Manufacturers Association
Provided by IHS under license with NEMA
No reproduction or networking permitted without license from IHS
Not for Resale

"GO" GAUGE FOR CAPS ON FINISHED LAMPS

CALIBRE "ENTRE" POUR CULOTS SUR LAMPES TERMINEES

E17

Dimensions in millimetres - Dimensions en millimètres

The drawing is intended only to illustrate the dimensions essential for interchangeability.
Le dessin a pour seul but d'illustrer les dimensions essentielles pour l'interchangeabilité.

For details of cap E17, see sheet 7004-26.
Pour les détails du culot E17, voir feuille 7004-26.

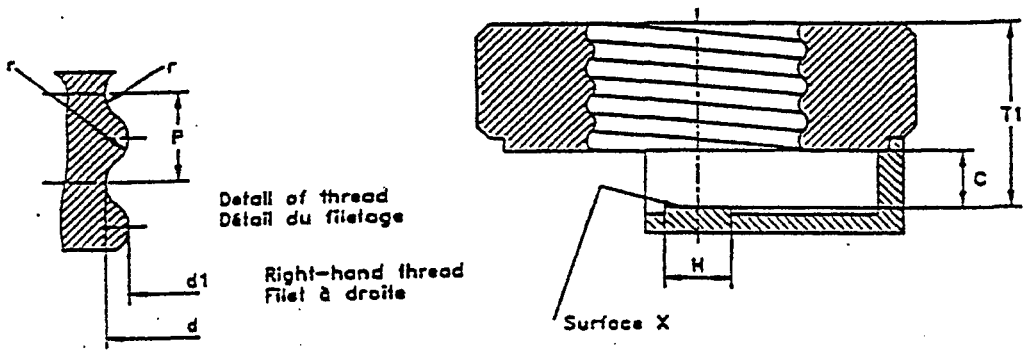

The sharp part of the edge of the thread at the entrance of the gauge shall be broken with a radius of 0,2 mm to 0,3 mm.
Le bord vif de la partie filetée à l'entrée du calibre doit être arrondi avec un rayon de 0,2 mm à 0,3 mm.

PURPOSE: To check the maximum dimensions of the screw thread and dimension T1min of E17 caps on finished lamps.

TESTING: When the cap on a finished lamp has been screwed into the gauge as far as it will go, the central contact shall touch surface X. When the lamp is removed from the gauge, at least two full turns shall be required to disengage the threads.

Reference	Dimension	Tolerance	Limit after wear Limite après usage
C	2,36	+ 0,0 - 0,05	
H	4,75	+ 0,05 - 0,5	
P	2,822	–	
T1	15,24	+ 0,0 - 0,025	
d	16,64	+ 0,025 - 0,0	16,70
d1	15,27	+ 0,025 - 0,0	15,33
r	0,897	–	

BUT: Vérification des dimensions maximales du filetage et de la dimension T1min des culots E17 sur lampes terminées.

ESSAI: Lorsque le culot sur lampe terminée est vissé complètement dans le calibre, le contact central doit toucher la surface X. Lors de l'enlèvement de la lampe du calibre, au moins deux tours complets doivent être accomplis pour désengager les filetages.

Copyright National Electrical Manufacturers Association
Provided by IHS under license with NEMA
No reproduction or networking permitted without license from IHS
Not for Resale

"NOT GO" GAUGE FOR CAPS ON FINISHED LAMPS

CALIBRE "N'ENTRE PAS" POUR CULOTS SUR LAMPES TERMINEES

E17

Dimensions in millimetres - Dimensions en millimètres

The drawing is intended only to illustrate the dimensions essential for interchangeability.
Le dessin a pour seul but d'illustrer les dimensions essentielles pour l'interchangeabilité.

For details of cap E17, see sheet 7004-26.
Pour les détails du culot E17, voir feuille 7004-26.

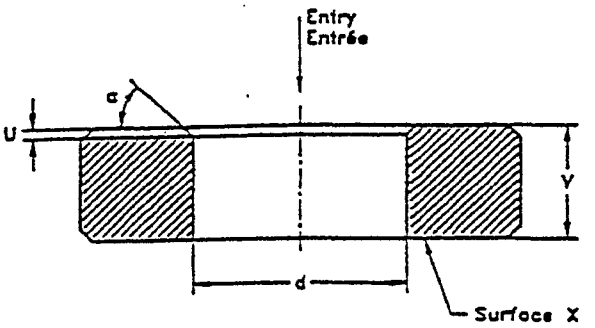

PURPOSE: To check the minimum outside (major) diameter of the screw thread, dimension d, of E17 caps on finished lamps.

TESTING: When the gauge is placed over the thread of the cap on a finished lamp, held cap uppermost, the central contact shall not project beyond surface X.
Only the weight of the gauge itself shall be used in the test.

Reference	Dimension	Tolerance
U	1,0	+ 0,0 - 0,1
V	13,0	+ 0,05 - 0,0
d	16,28	+ 0,0 - 0,01
α	Approx. 45°	–
Mass Masse	0,129 kg	+ 10 % - 10 %

BUT: Vérification du minimum du diamètre extérieur (majeur) du filetage, dimension d, des culots E17 sur lampes terminées.

ESSAI: Lorsque le calibre est placé sur le filetage du culot sur une lampe terminée, le culot étant en haut, le contact central ne doit pas dépasser la surface X.
L'essai doit être effectué sous l'effet du seul poids du calibre.

Copyright National Electrical Manufacturers Association
Provided by IHS under license with NEMA
No reproduction or networking permitted without license from IHS
Not for Resale

GAUGE FOR TESTING CONTACT-MAKING OF LAMPS FITTED WITH CAPS
CALIBRE POUR LA VERIFICATION DE LA REALITE DU CONTACT POUR LAMPES MUNIES DU CULOT
E17

Dimensions in millimetres - Dimensions en millimètres

The drawing is intended only to illustrate the dimensions essential for interchangeability.
Le dessin a pour seul but d'illustrer les dimensions essentielles pour l'interchangeabilité.

For details of cap E17, see sheet 7004-26.
Pour les détails du culot E17, voir feuille 7004-26.

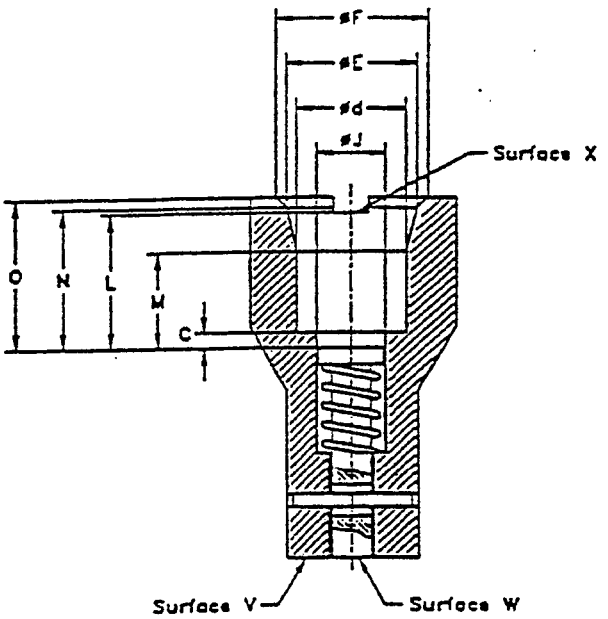

The plunger of the gauge is shown in the test position. When the plunger is at rest, surface W shall be retracted deeper than surface V.

Le plongeur du calibre est montré dans sa position d'essai. En position de repos, la surface W du plongeur doit être en retrait de la surface V.

Reference	Dimension	Tolerance
C	2,36	+ 0,025 - 0,0
E	19,84	+ 0,0 - 0,025
F	23,01	+ 0,0 - 0,025
J	10,54	+ 0,025 - 0,0
L	21,44	+ 0,025 - 0,0
M	15,24	+ 0,025 - 0,0
N	22,23	+ 0,025 - 0,0
O	23,88	+ 0,025 - 0,0
d	16,69	+ 0,0 - 0,008

PURPOSE: To check lamp dimensions for contact-making in E17 lampholders.

TESTING: The shape of the lamp with regard to the fit in the lampholder is assumed to be correct, if the lamp can be pushed into the gauge until plane W reaches plane V or projects beyond it.

BUT: Vérification des dimensions de la lampe pour la réalité du contact dans les douilles E17.

ESSAI: La forme de la lampe est présumée correcte si la lampe entre dans le calibre jusqu'à ce que le plan W soit de niveau avec le plan V ou en fasse saillie.

Copyright National Electrical Manufacturers Association
Provided by IHS under license with NEMA
No reproduction or networking permitted without license from IHS
Not for Resale

"GO" GAUGE FOR LAMPHOLDERS

CALIBRE "ENTRE" POUR DOUILLES

E17

Dimensions in millimetres - Dimensions en millimètres

The drawing is intended only to illustrate the dimensions essential for interchangeability.
Le dessin a pour seul but d'illustrer les dimensions essentielles pour l'interchangeabilité.

For details of holder E17, see sheet 7005-20.
Pour les détails de la douille E17, voir feuille 7005-20.

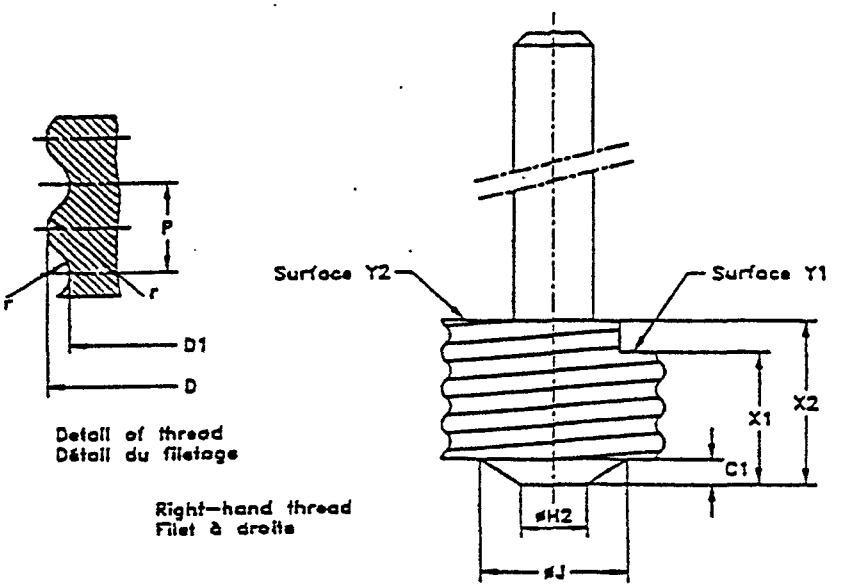

The sharp part of the edge of the thread at the underside of the gauge shall be broken with a radius of approximately 0,5 mm.

L'arête de la partie filetée au fond du calibre doit être arrondie à un rayon de 0,5 mm approximativement.

Reference	Dimension	Tolerance	Limit after wear Limite après usage
CT	2,36	+ 0,0 - 0,05	
D	16,69	+ 0,0 - 0,025	16,66
D1	15,32	+ 0,0 - 0,025	15,29
H2	5,33	+ 0,0 - 0,05	
J	10,67	+ 0,0 - 0,05	
P	2,822	-	
X1	12,0	+ 0,0 - 0,025	
X2	14,0	+ 0,025 - 0,0	
r	0,897	—	

PURPOSE: To check the minimum dimensions of the screw thread and dimension X of E17 lampholders.

TESTING: It shall be possible to screw the gauge into the lampholder smoothly. When the gauge is screwed in as far as it will go, the rim of the screwed shell of the lampholder shall be co-planar with or project beyond surface Y1, but it shall not project beyond surface Y2.

BUT: Vérification des dimensions minimales du filetage et de la dimension X des douilles E17.

ESSAI: Il doit être possible de visser le calibre dans la douille sans exercer un effort anormal. Lorsque le calibre est complètement vissé, le bord du filetage de la douille doit être de niveau avec la surface Y1 ou en saillie, mais il ne doit pas dépasser la surface Y2.

Copyright National Electrical Manufacturers Association
Provided by IHS under license with NEMA
No reproduction or networking permitted without license from IHS
Not for Resale

"NOT GO" GAUGE FOR LAMPHOLDERS

CALIBRE "N'ENTRE PAS" POUR DOUILLES

E17

Dimensions in millimetres - Dimensions en millimètres

The drawing is intended only to illustrate the dimensions essential for interchangeability.
Le dessin a pour seul but d'illustrer les dimensions essentielles pour l'interchangeabilité.

For details of holder E17, see sheet 7005-20.
Pour les détails de la douille E17, voir feuille 7005-20.

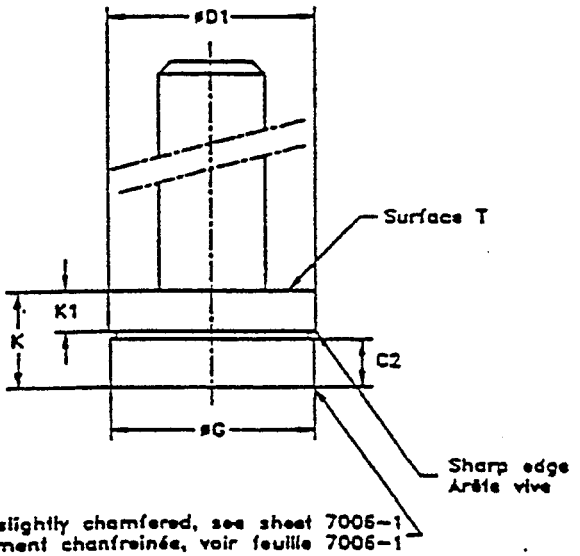

Edge slightly chamfered, see sheet 7006-1
Arête légèrement chanfreinée, voir feuille 7006-1

Reference	Dimension	Tolerance
C2	3,81	+ 0,0 - 0,08
D1	15,49	+ 0,01 - 0,0
G	15,24	+ 0,0 - 0,025
K	7,62	+ 0,13 - 0,13
K1	3,18	+ 0,0 - 0,05
Mass Masse	0,135 kg	+ 10 % - 10 %

PURPOSE: To check the maximum minor diameter, dimension D1, of the E17 lampholder screw thread.

TESTING: When the gauge is placed in the thread of the holder, held open end uppermost, the rim of the screwed shell of the lampholder shall not project beyond surface T. Only the mass of the gauge itself shall be used in the test.

BUT: Vérification du diamètre intérieur maximal, dimension D1, du filetage de la douille E17.

ESSAI: Lorsque le calibre est placé dans le filetage de la douille, tenue de façon que l'extrémité ouverte soit dirigée vers le haut, le bord du filetage de la douille ne doit pas dépasser la surface T. L'essai doit être effectué sous l'effet de la seule masse du calibre.

Copyright National Electrical Manufacturers Association
Provided by IHS under license with NEMA
No reproduction or networking permitted without license from IHS
Not for Resale

GAUGE FOR TESTING CONTACT-MAKING IN LAMPHOLDERS

CALIBRE POUR LA VERIFICATION DE LA REALITE DU CONTACT DANS LES DOUILLES

E17

Dimensions in millimetres - Dimensions en millimètres

The drawing is intended only to illustrate the dimensions essential for interchangeability.
Le dessin a pour seul but d'illustrer les dimensions essentielles pour l'interchangeabilité.

For details of holder E17, see sheet 7005-20.
Pour les détails de la douille E17, voir feuille 7005-20.

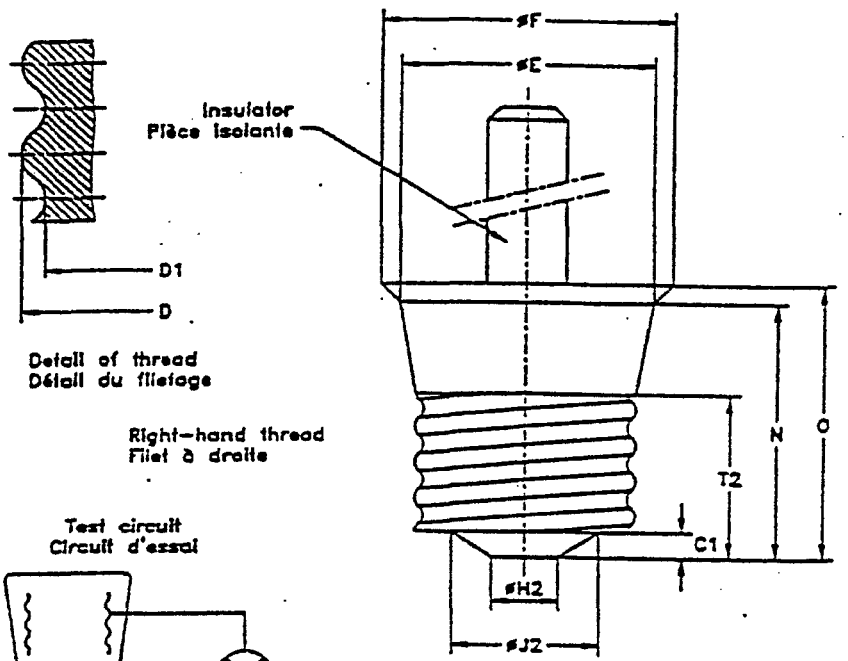

Test circuit
Circuit d'essai

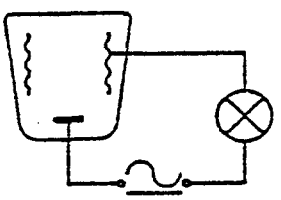

Reference	Dimension	Tolerance
C	2,36	+ 0,0 - 0,05
D	16,64	+ 0,025 - 0,0
D1	15,27	+ 0,025 - 0,0
E	19,84	+ 0,02 - 0,0
F	23,01	+ 0,02 - 0,0
H2	5,33	+ 0,0 - 0,05
J2	10,67	+ 0,0 - 0,05
N	22,23	+ 0,0 - 0,02
O	23,80	+ 0,0 - 0,02
T2	15,11	+ 0,0 - 0,025

The form of the screw thread shall be in accordance with the dimensions shown on sheet 7004-26. The gauge shall be made of metal with the exception of an insulated handle at the top.

La forme du filetage doit être conforme aux dimensions indiquées sur la feuille 7004-26. Le calibre doit être en métal, à l'exception du manche isolé, à son extrémité.

PURPOSE: To check lampholders E17 for contact-making.

TESTING: When the gauge has been fully screwed into the holder, the indicator lamp, shown in the test circuit shall light.

BUT: Vérification des douilles E17 en ce qui concerne la réalité du contact.

ESSAI: Lorsque le calibre est vissé à fond dans la douille, la lampe indicatrice du circuit d'essai doit s'allumer.

Copyright National Electrical Manufacturers Association
Provided by IHS under license with NEMA
No reproduction or networking permitted without license from IHS
Not for Resale

Threaded "Go" Gauge for E26 Medium-Screw-Based Lamps

The drawing is intended only to illustrate essential dimensions of the gauge.

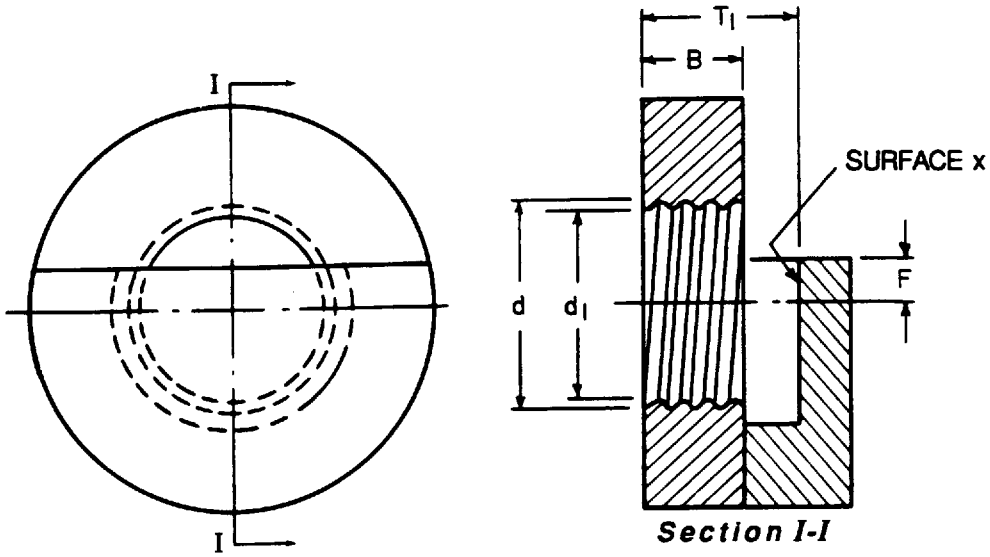

Reference	Dimension in	Tolerance in	Nearest metric equivalent mm
B (Note)	0.500	±0.005	12.70
F	0.230	±0.005	5.84
T_1 (Note)	0.770	–0.001	19.56
d	1.043	+0.0012	26.49
d_1	0.977	+0.0012	24.82

NOTE – For screw-plug fuses, the B and T_1 dimensions are 0.420 in (10.67 mm) and 0.690 in (17.53 mm), respectively.

The form of the screw threads shall be in accordance with the dimensions shown in ANSI C81.61, Standard Sheet 1-157.

Purpose

To check thread diameter (dimensions d and d_1) and threaded length (dimension T_1) of medium screw bases on finished lamps. This gauge is for use with lamps having either single- or double-contact medium screw bases.

For details of E26 bases, see ANSI C81.61, Standard Sheets 1-157 and 1-158.

Copyright National Electrical Manufacturers Association
Provided by IHS under license with NEMA
No reproduction or networking permitted without license from IHS
Not for Resale

Testing

Screw the lamp into the gauge and check for contact at surface x. Remove the lamp, counting the number of turns for disengagement.

Copyright National Electrical Manufacturers Association
Provided by IHS under license with NEMA
No reproduction or networking permitted without license from IHS
Not for Resale

"Not-Go" Ring Gauge for Lamps Having Bases with E26 Threads

The drawing is intended only to illustrate essential dimensions of the gauge.

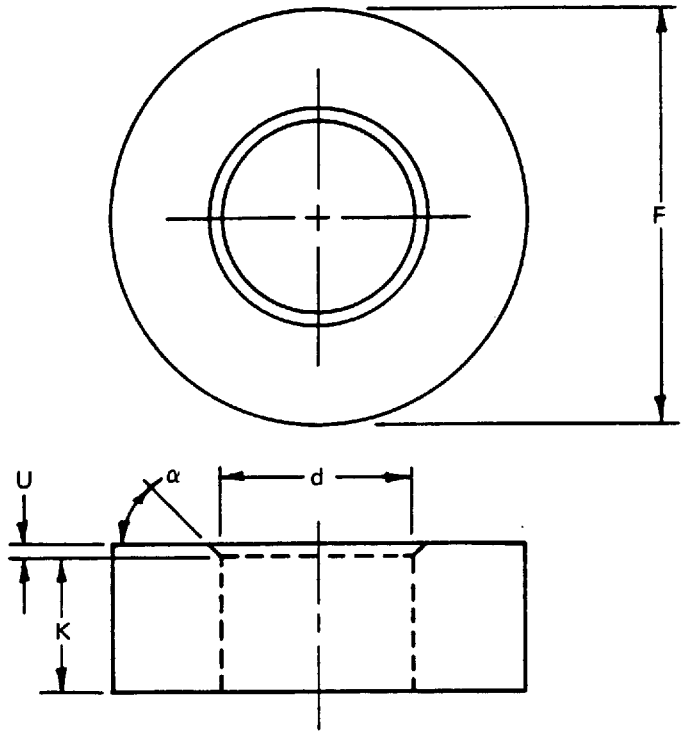

Reference	Dimension in	Tolerance in	Nearest metric equivalent mm
F	1.8	approx	46
K	0.630	±0.005	16.0
U	0.039	±0.005	1.0
d	1.029	−0.0005	26.14
α (degrees)	45°	nominal	45°

Weight lb	Tolerance	Nearest metric equivalent g
0.33	±10%	150

Copyright National Electrical Manufacturers Association
Provided by IHS under license with NEMA
No reproduction or networking permitted without license from IHS
Not for Resale

ANSI C81.63-1991
Std Sheet 3-158-1

Purpose

To check the minimum major diameter of the screw threads on finished lamps.

For details of E26 bases, see ANSI C81.61, Standard Sheets 1-157, 1-158, 1-159, and 1-162.

Testing

Place the chamfered end of the gauge over the base threads of the lamp, held base up, and check the position of the center contact.

NOTE – The gauge is for use with lamps having either single- or double-contact E26 medium screw bases. It may also be used for unmounted bases.

Copyright National Electrical Manufacturers Association
Provided by IHS under license with NEMA
No reproduction or networking permitted without license from IHS
Not for Resale

Threaded "Go" Gauge for Unmounted, Nonskirted E26 Medium-Screw Bases

The drawing is intended only to illustrate essential dimensions of the gauge.

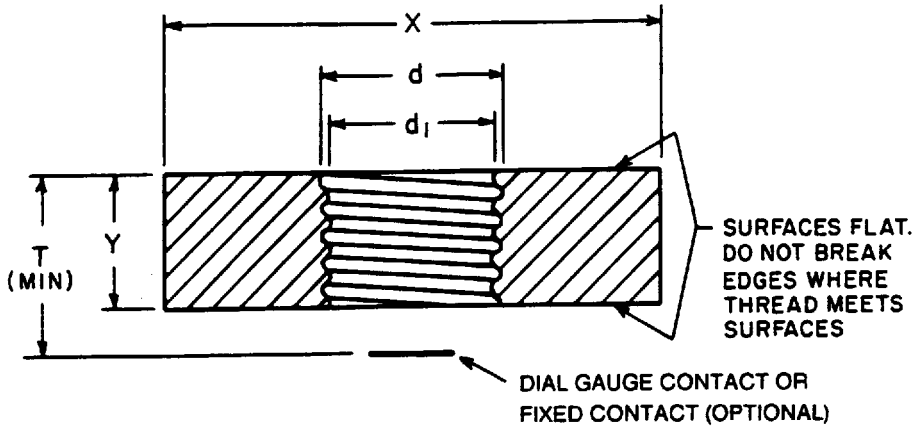

Reference	Dimension in	Tolerance in	Nearest metric equivalent mm
T	0.770	−0.001	19.56
X	2.625	±0.02	66.68
Y	0.688	±0.02	17.49
d	1.037	+0.0012	26.34
d_1	0.971	+0.0012	24.66

The form of the screw threads shall be in accordance with the dimensions shown in ANSI C81.61, Standard Sheet 1-157.

Purpose
To check insertion depth, minimum number of effective threads, and maximum thread diameter of unmounted bases.

For details of E26 bases, see ANSI C81.61, Standard Sheets 1-157 and 1-158.

Testing
Screw the base into the gauge and check the depth value (T).

NOTE – This gauge is for use with single- or double-contact E26 medium-screw nonskirted bases.

Copyright National Electrical Manufacturers Association
Provided by IHS under license with NEMA
No reproduction or networking permitted without license from IHS
Not for Resale

Threaded "Go" Gauges for Unmounted E26/50×39 and E26/53×39 Skirted Medium-Screw Bases and E26/50×39 and E26/53×39 Medium-Screw-Based Lamps

Two separate gauges are required. One to accommodate unmounted bases (T) and one to accommodate screw-based lamps (T_1).

The drawing is intended only to illustrate essential dimensions of the gauge.

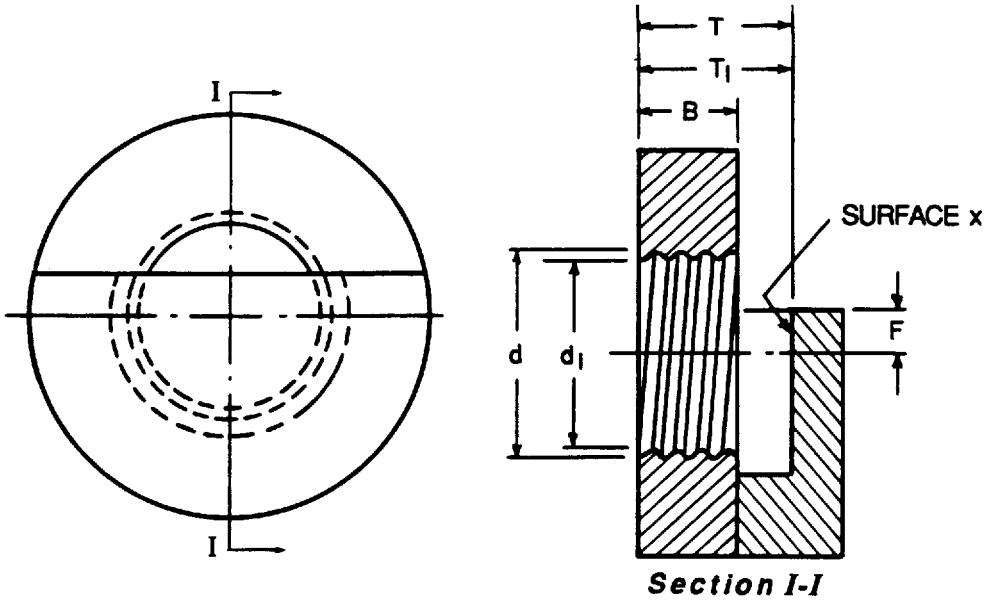

Section I-I

Reference	Dimension in	Tolerance in	Nearest metric equivalent mm
B	0.500	±0.005	12.70
F	0.230	±0.005	5.84
T (Note 1)	0.759	−0.001	19.28
T_1 (Note 2)	0.770	−0.001	19.56
d	1.042	+0.0012	26.47
d_1	0.976	+0.0012	24.79

NOTES

1 This dimension applies to unmounted bases.

2 This dimension applies to screw-based lamps.

Copyright National Electrical Manufacturers Association
Provided by IHS under license with NEMA
No reproduction or networking permitted without license from IHS
Not for Resale

The form of the screw threads shall be in accordance with the dimensions shown in ANSI C81.61, Standard Sheet 1-157.

Purpose
To check thread diameter (dimensions d and d_1) and threaded length of unmounted (dimension T) and mounted skirted (dimension T_1) medium screw base.

For details of the E26/50x39 and E26/53x39 unmounted and mounted skirted medium screw bases, see ANSI C81.61, Standard Sheets 1-159 and 1-162.

Testing
Screw the unmounted base or finished lamp into the gauge and check for contact with surface x. Remove the base or lamp, counting the number of turns for disengagement.

Copyright National Electrical Manufacturers Association
Provided by IHS under license with NEMA
No reproduction or networking permitted without license from IHS Not for Resale

Gauge with Reference Diameter of 0.520 Inch for Unmounted and Mounted E26d Double-Contact Medium-Screw Bases

The drawing is intended only to illustrate essential dimensions of the gauge.

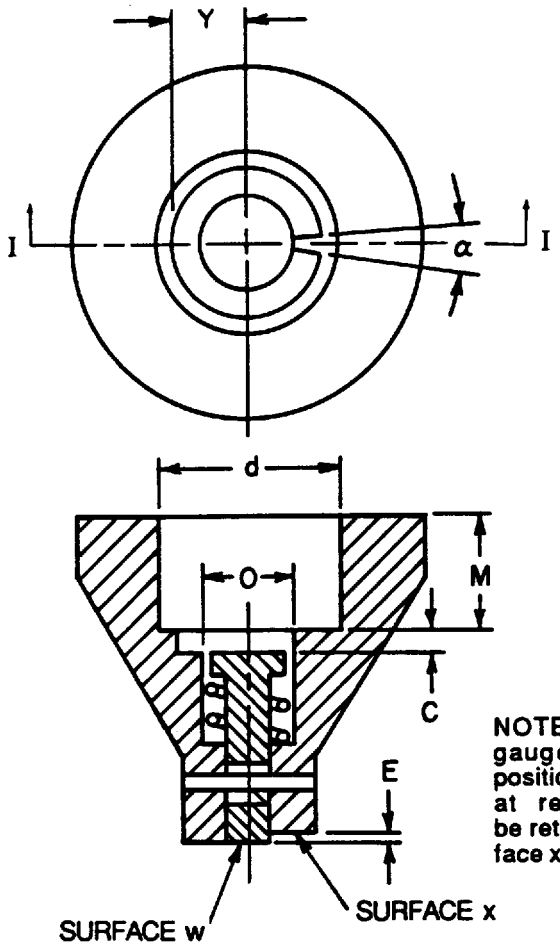

NOTE – The plunger of the gauge is shown in the test position. When the plunger is at rest, surface w shall be retracted deeper than surface x.

Section I-I

Copyright National Electrical Manufacturers Association
Provided by IHS under license with NEMA
No reproduction or networking permitted without license from IHS
Not for Resale

Reference	Dimension in	Tolerance in	Nearest metric equivalent mm
C	0.125	+0.0005	3.17
E	0.020	–0.0005	0.5
M	0.669	±0.004	17.0
O	0.520	±0.0005	13.2
Y	0.433	±0.004	11.0
d	1.045	–0.0005	26.54
α (degrees)	10°	±1°	10°

Purpose
To check the dimensions C max and C_1 max.

For details of E26d bases, see ANSI C81.61, Standard Sheet 1-158.

Testing
Push the unmounted base or finished lamp into the gauge. Check the relationship of surface w to the appropriate test surface.

Copyright National Electrical Manufacturers Association
Provided by IHS under license with NEMA
No reproduction or networking permitted without license from IHS
Not for Resale

Gauge with Reference Diameter of 0.410 Inch for E26d Double-Contact Medium-Screw-Based Lamps

The drawing is intended only to illustrate essential dimensions of the gauge.

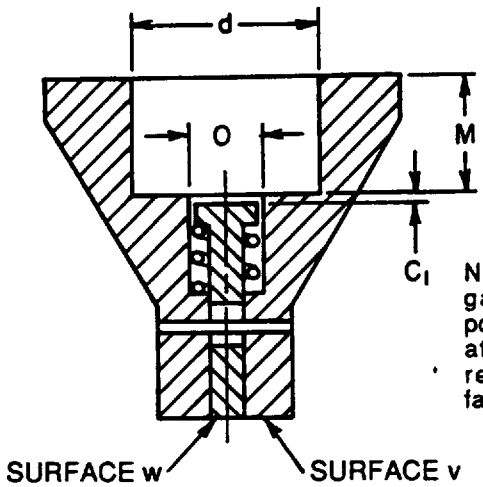

NOTE – The plunger of the gauge is shown in the test position. When the plunger is at rest, surface w shall be retracted deeper than surface v.

Reference	Dimension in	Tolerance in	Nearest metric equivalent mm
C_1	0.031	–0.0005	0.79
M	0.748	±0.004	19.0
O	0.410	–0.0005	10.4
d	1.045	+0.0005	26.54

Purpose
To check the dimension C_1 min on finished lamps.

For details of E26d bases, see ANSI C81.61, Standard Sheet 1-158.

Testing
Push the base of the lamp into the gauge and check the relationship of surfaces w and v.

Copyright National Electrical Manufacturers Association
Provided by IHS under license with NEMA
No reproduction or networking permitted without license from IHS
Not for Resale

Gauge for Testing Contact-Making of Nonskirted E26 Medium-Screw-Based Lamps

The drawing is intended only to illustrate essential dimensions of the gauge.

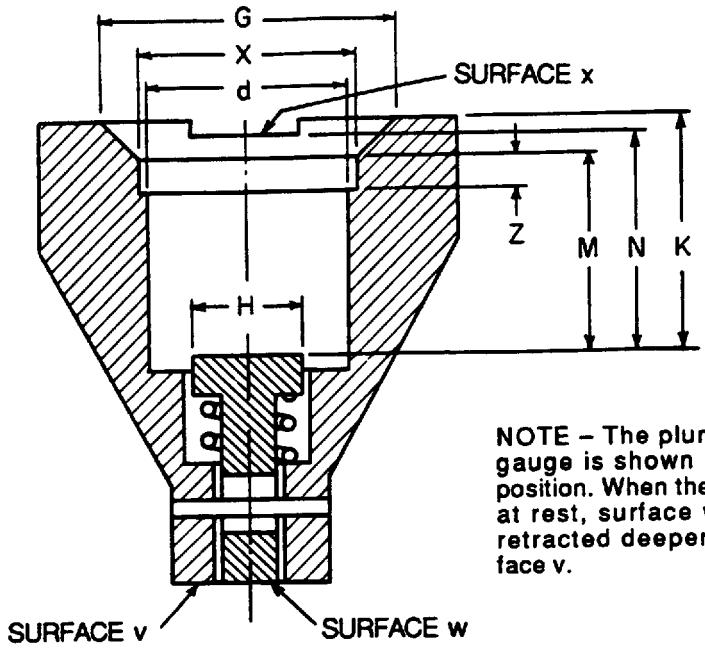

NOTE – The plunger of the gauge is shown in the test position. When the plunger is at rest, surface w shall be retracted deeper than surface v.

Reference	Dimension in	Tolerance in	Nearest metric equivalent mm
G	1.386	−0.0005	35.20
H	0.551	±0.004	14
K	1.100	+0.001	27.94
M	0.962	+0.001	24.43
N	1.000	+0.001	25.4
X	1.110	−0.0005	28.19
Z	0.177	±0.004	4.5
d	1.045	−0.0005	26.54

Purpose

To check the lamp dimensions, particularly the combination of base length and bulb shoulder shape, for their effect on contact-making in the lampholder.

For details of E26 bases, see ANSI C81.61, Standard Sheets 1-157 and 1-158.

Copyright National Electrical Manufacturers Association
Provided by IHS under license with NEMA
No reproduction or networking permitted without license from IHS
Not for Resale

Testing

Push the base of the lamp into the gauge and check the relationship of surfaces w and v. Also, check for the presence of any conductive material above surface x.

NOTE – This gauge is for use with lamps having either single- or double-contact E26 medium screw bases.

Copyright National Electrical Manufacturers Association
Provided by IHS under license with NEMA
No reproduction or networking permitted without license from IHS
Not for Resale

Gauge for Testing Contact-Making of E26/50×39 Skirted Medium-Screw-Based Lamps

The drawing is intended only to illustrate essential dimensions of the gauge.

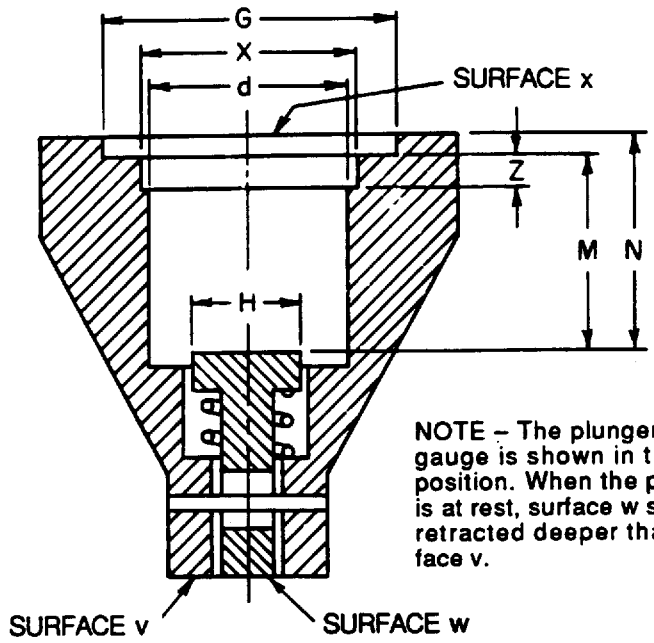

NOTE – The plunger of the gauge is shown in the test position. When the plunger is at rest, surface w shall be retracted deeper than surface v.

Reference	Dimension in	Tolerance in	Nearest metric equivalent mm
G (dia)	1.590	+0.004	40.39
H (dia)	0.551	±0.004	14.00
M	1.057	+0.001	26.85
N	1.150	+0.001	29.21
X (dia)	1.110	+0.001	28.19
Z	0.272	±0.004	6.91
d (dia)	1.045	−0.0005	26.54

Purpose

To check the base dimensions, particularly the base length, skirt shape, and projection of solder or other conductive material from the top of the metal shell, for their effect on contact-making in the lampholder.

For details of E26/50×39 skirted medium screw bases, see ANSI C81.61, Standard Sheet 1-159.

Copyright National Electrical Manufacturers Association
Provided by IHS under license with NEMA
No reproduction or networking permitted without license from IHS
Not for Resale

Testing
Push the lamp into the gauge until it stops and check the relationship of surfaces v and w. Also, check for the presence of any conductive material above surface x.

Copyright National Electrical Manufacturers Association
Provided by IHS under license with NEMA
No reproduction or networking permitted without license from IHS
Not for Resale

Threaded "Go" Gauge for E26 Single-Contact Medium-Screw Lampholders

The drawing is intended only to illustrate essential dimensions of the gauge.

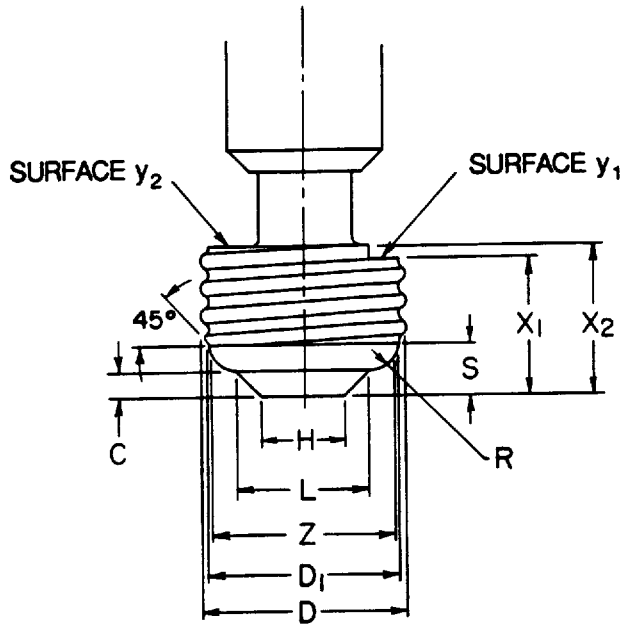

Reference	Dimension in	Tolerance in	Nearest metric equivalent mm
C	0.125	+0.002	3.17
D	1.045	−0.0005	26.54
D_1	0.979	−0.0005	24.87
H	0.460	±0.001	11.68
L	0.665	±0.001	16.89
R	0.125	±0.004	3.17
S	0.270	±0.004	6.86
X_1	0.672	−0.001	17.07
X_2	0.750	+0.001	19.05
Z	0.906	±0.001	23.00

NOTES

1 The form of the screw threads shall be in accordance with the dimensions shown in ANSI C81.62, Standard Sheet 2-157.

2 The sharp part of the edge of the thread at the underside of the gauge shall be broken with a radius of approximately 0.020 in (0.50 mm).

Copyright National Electrical Manufacturers Association
Provided by IHS under license with NEMA
No reproduction or networking permitted without license from IHS
Not for Resale

ANSI C81.63-1991
Std Sheet 3-169-1

Purpose
To check the minimum dimensions of the lampholder screw thread and the minimum and maximum values of dimension X.

Testing
Screw the gauge fully into the lampholder and check the relationship of the rim of the holder's screw shell to surfaces y_1 and y_2.

Copyright National Electrical Manufacturers Association
Provided by IHS under license with NEMA
No reproduction or networking permitted without license from IHS
Not for Resale

"Not-Go" Plug Gauge for E26 Medium-Screw Lampholders

The drawing is intended only to illustrate essential dimensions of the gauge.

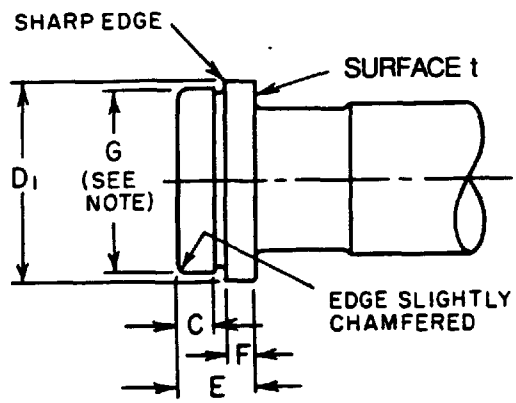

Reference	Dimension in	Tolerance in	Nearest metric equivalent mm
C	0.177	−0.005	4.50
D_1	0.987	+0.0005	25.07
E	0.400	±0.005	10.16
F	0.157	−0.003	3.99
G (Note)	0.976	−0.002	24.79

NOTE – For centering purposes only.

Mass lb		Nearest metric equivalent g	
Min	**Max**	**Min**	**Max**
0.648	0.798	294	362

Purpose

To check the maximum of the minor diameter D_1 of the screw threads of E26 medium screw lampholders.

For details of E26 lampholders, see ANSI C81.62, Standard Sheets 2-157 and 2-158.

Copyright National Electrical Manufacturers Association
Provided by IHS under license with NEMA
No reproduction or networking permitted without license from IHS
Not for Resale

Testing
Attempt to insert the gauge into the lampholder and check the relationship of the thread to surface t.

NOTE – This gauge is for use with single- and double-contact E26 medium screw lampholders.

Copyright National Electrical Manufacturers Association
Provided by IHS under license with NEMA
No reproduction or networking permitted without license from IHS
Not for Resale

Threaded Gauge for Testing Contact-Making of E26 Single-Contact Medium-Screw Lampholders

ANSI C81.63-1991
Std Sheet 3-171-1

The drawing is intended only to illustrate essential dimensions of the gauge.

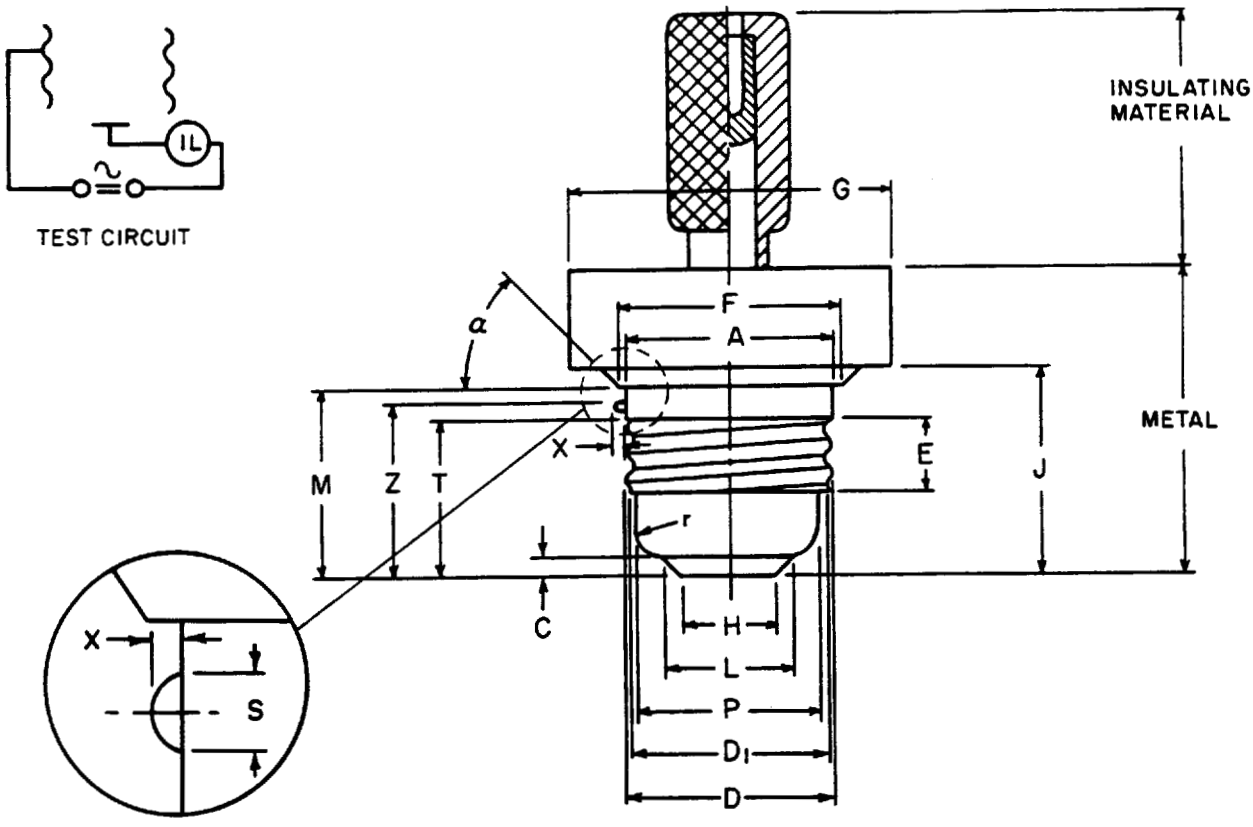

Copyright National Electrical Manufacturers Association
Provided by IHS under license with NEMA
No reproduction or networking permitted without license from IHS
Not for Resale

Reference	Dimension in	Tolerance in	Nearest metric equivalent mm
A	1.031	+0.0008	26.20
C	0.125	+0.002	3.18
D	1.043	+0.0012	26.49
D_1	0.977	+0.0012	24.82
E	0.436	±0.002	11.07
F	1.085	+0.0008	27.56
G	1.614	+0.0008	41.0
H	0.447	±0.001	11.35
J	1.010	+0.002	25.65
L	0.665	±0.001	16.89
M	0.950	−0.002	24.13
P	0.945	−0.002	24.00
S	0.100	+0.005	2.54
T (Note 1)	0.760	−0.002	19.30
X	0.035 (Note 2)	+0.001	0.89 (Note 2)
Z	0.866	+0.004	22.0
r	0.125	±0.005	3.18
α (degrees)	45°	±30'	45°

NOTES

1 For screw-plug fuses, dimension T of the gauge is 0.690 in (17.27 mm).

2 Future objective: 0.040 in (1.02 mm).

The form of the screw threads shall be in accordance with dimensions shown in ANSI C81.62, Standard Sheet 2-157.

Purpose

To check those holder dimensions that relate to contact-making with the lamps.

For details of the E26 single-contact medium screw lampholders, see ANSI C81.62, Standard Sheet 2-157.

Testing

Screw the gauge fully into the holder and check the indicator lamp (IL). Also, check the clearance between the gauge and the upper edge of the holder.

NOTE – The gauge specified for testing contact-making of E26d double-contact, paper-lined lampholders may also be used for testing E26 single-contact lampholders. (See ANSI C81.63, Standard Sheet 3-177.)

Copyright National Electrical Manufacturers Association
Provided by IHS under license with NEMA
No reproduction or networking permitted without license from IHS
Not for Resale

Threaded "Go" Gauge for E26d Double-Contact Medium-Screw Lampholders

The drawing is intended only to illustrate essential dimensions of the gauge.

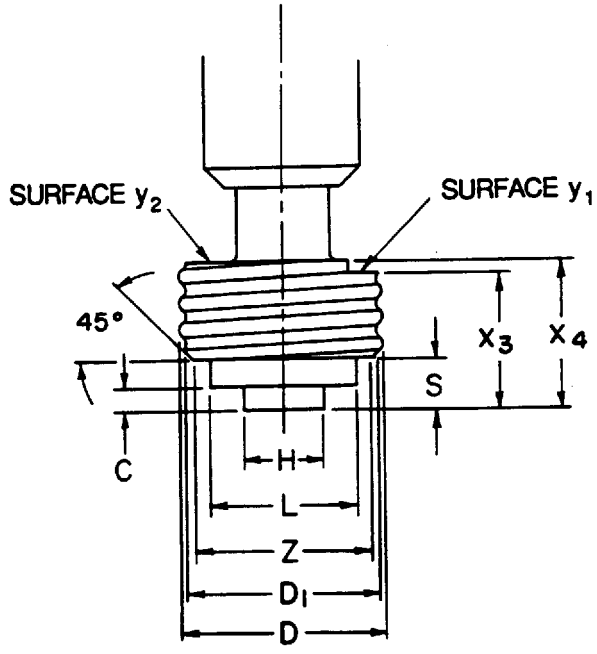

Reference	Dimension in	Tolerance in	Nearest metric equivalent mm
C	1.125	+0.002	3.17
D	1.045	−0.0012	26.54
D_1	0.979	−0.0012	24.87
H	0.394	−0.002	10.0
L	0.760	−0.002	19.3
S	0.220	±0.004	5.58
X_3	0.685	−0.001	17.40
X_4	0.750	+0.001	19.05
Z	0.906	±0.001	23.00

NOTES

1 The form of the screw threads shall be in accordance with the dimensions shown in ANSI C81.62, Standard Sheet 2-158.

2 The sharp part of the edge of the thread at the underside of the gauge shall be broken with a radius of approximately 0.020 in (0.50 mm).

Copyright National Electrical Manufacturers Association
Provided by IHS under license with NEMA
No reproduction or networking permitted without license from IHS
Not for Resale

ANSI C81.63-1991
Std Sheet 3-174-1

Purpose

To check the minimum dimensions of the screw threads of a double-contact E26d medium-screw lampholder.

For details of the E26d double-contact medium-screw lampholder, see ANSI C81.62, Standard Sheet 2-158.

Testing

Screw the gauge fully into the lampholder and check the relationship of the rim of the screw shell to surfaces y_1 and y_2.

Copyright National Electrical Manufacturers Association
Provided by IHS under license with NEMA
No reproduction or networking permitted without license from IHS
Not for Resale

Gauges for Checking Radial Position of Intermediate Contact of E26d Double-Contact Medium-Screw Lampholders

The drawing is intended only to illustrate essential dimensions of the gauge.

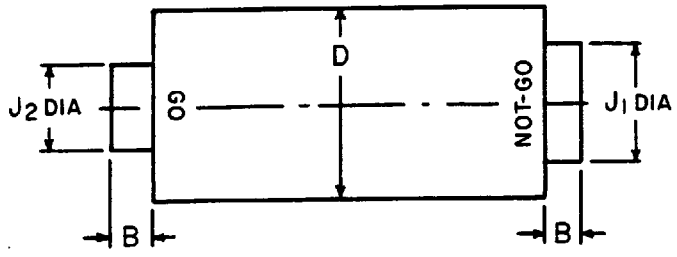

Reference	Dimension in	Tolerance in	Nearest metric equivalent mm
B	0.200	approx	5.0
D	0.979	–0.0005	24.87
J_1	0.520	+0.0005	13.2
J_2	0.410	–0.0005	10.4

Purpose
To check the position of the intermediate contact, with respect to its radial distance from the center of the lampholder.

For details of E26d lampholders, see ANSI C81.62, Standard Sheet 2-158.

Testing
Attempt to slip the projecting boss at each end of the gauge past the intermediate contact. Always center the gauge in the holder properly.

Copyright National Electrical Manufacturers Association
Provided by IHS under license with NEMA
No reproduction or networking permitted without license from IHS
Not for Resale

Threaded Contact-Making Gauges for Testing the Relative Positions of the Contacts in E26d Double-Contact Medium-Screw Lampholders

Two similar gauges are required. They are referred to in the table as "gauge A" and "gauge B" and differ only with respect to dimension C_1.

The drawing is intended only to illustrate essential dimensions of the gauges.

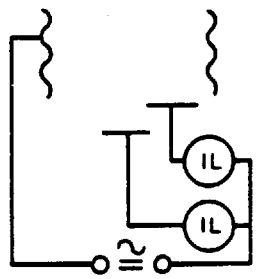

TEST CIRCUIT

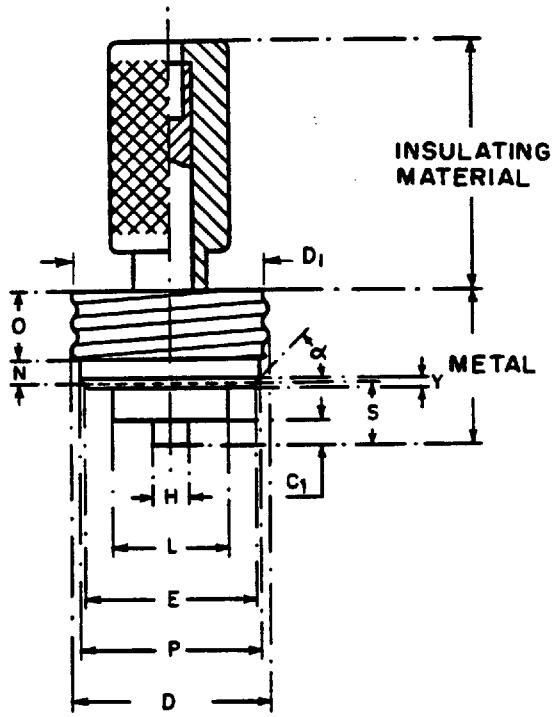

Copyright National Electrical Manufacturers Association
Provided by IHS under license with NEMA
No reproduction or networking permitted without license from IHS
Not for Resale

ANSI C81.63-1991
Std Sheet 3-176-1

Reference	Dimension in		Tolerance in	Nearest metric equivalent mm	
	Gauge A	Gauge B		Gauge A	Gauge B
C_1	0.031	–	−0.0004	0.79	–
C_1	–	0.125	+0.0004	–	3.17
D	1.043	1.043	+0.0012	26.49	26.49
D_1	0.977	0.977	+0.0012	24.82	24.82
E	0.906	0.906	–	23	23
H	0.197	0.197	±0.004	5.0	5.0
L	0.610	0.610	−0.0008	15.5	15.5
N	0.118	0.118	±0.008	3.0	3.0
O	0.354	0.354	±0.008	9.0	9.0
P	0.945	0.945	−0.002	24.0	24.0
S (Note 1)	0.325	0.325	+0.0008	8.25	8.25
Y	0.040	0.040	±0.004	1.0	1.0
α (degrees)	45°	45°	±30'	45°	45°

NOTES

1 This dimension is required for compliance with the IEC publications. It is not a part of this American National Standard.

2 The form of the screw threads shall be in accordance with the dimensions shown in ANSI C81.62, Standard Sheet 2-158.

Purpose

To check that the contacts of a E26d double-contact medium screw lampholder are capable of assuming simultaneously the positions corresponding to: (1) dimensions C_1 min and S_1 max and (2) dimensions C_1 max and S_1 max (both specified for the base on a finished lamp as shown on ANSI C81.61, Standard Sheet 1-158).

For details of the E26d double-contact medium screw lampholder, see ANSI C81.62, Standard Sheet 2-158.

Testing

Screw each gauge A and B, in sequence, fully into the lampholder and check the indicator lamps.

Copyright National Electrical Manufacturers Association
Provided by IHS under license with NEMA
No reproduction or networking permitted without license from IHS
Not for Resale

Threaded Gauge for Testing Contact-Making of Metal-Shell, Paper-Lined E26d Double-Contact Medium-Screw Lampholders

ANSI C81.63-1991
Std Sheet 3-177-1

The drawing is intended only to illustrate essential dimensions of the gauge.

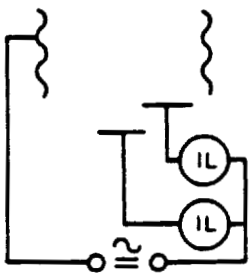

TEST CIRCUIT

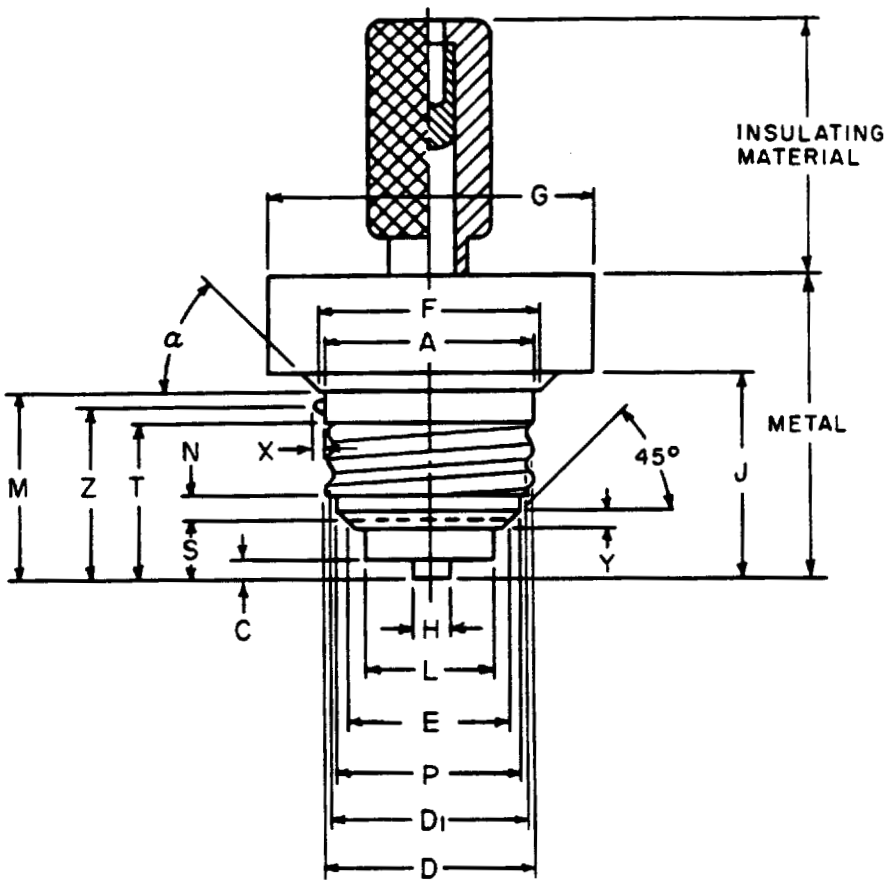

Copyright National Electrical Manufacturers Association
Provided by IHS under license with NEMA
No reproduction or networking permitted without license from IHS
Not for Resale

Reference	Dimension in	Tolerance in	Nearest metric equivalent mm
A	1.031	+0.0008	26.20
C	0.105	+0.002	2.67
D	1.043	+0.0012	26.49
D_1	0.977	+0.0012	24.82
E (Note 1)	0.906	−0.002	23.00
F	1.085	+0.0008	27.56
G	1.614	+0.0008	41.0
H	0.172	−0.0008	4.37
J	1.010	+0.002	25.65
L	0.610	−0.0008	15.49
M	0.950	−0.002	24.13
N	0.118	±0.008	3.0
P	0.945	−0.002	24.00
S (Note 1)	0.305	−0.002	7.75
T	0.760	−0.002	19.30
X	0.355 (Note 2)	+0.001	0.89 (Note 2)
Y	0.040	±0.004	1.0
Z	0.866	±0.004	22.0
α (degrees)	45°	±30'	45°

NOTES

1 Dimensions E and S are required for compliance with IEC publications. It is not a part of this American National Standard.

2 Future objective: 0.040 in (1.02 mm).

The form of the screw threads shall be in accordance with the dimensions shown in ANSI C81.62, Standard Sheet 2-158.

Purpose
To check those holder dimensions that relate to contact-making with the lamps.

For details of E26d lampholders, see ANSI C81.62, Standard Sheet 2-158.

Testing
Screw the gauge fully into the holder and check the indicator lamps.

Copyright National Electrical Manufacturers Association
Provided by IHS under license with NEMA
No reproduction or networking permitted without license from IHS
Not for Resale

Threaded Gauge for Testing Contact-Making of Porcelain or Molded E26d Double-Contact Medium-Screw Lampholders

The drawing is intended only to illustrate essential dimensions of the gauge.

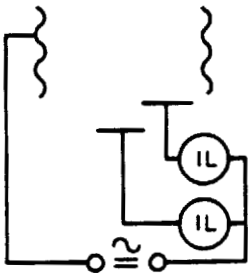

TEST CIRCUIT

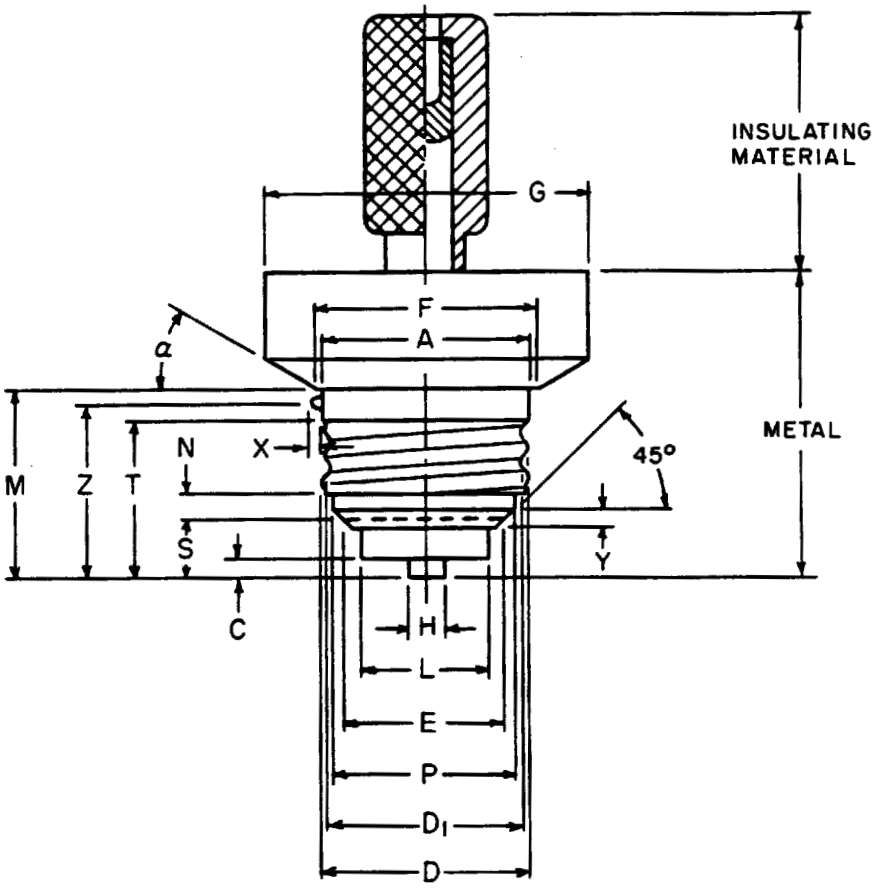

Copyright National Electrical Manufacturers Association
Provided by IHS under license with NEMA
No reproduction or networking permitted without license from IHS
Not for Resale

Reference	Dimension in	Tolerance in	Nearest metric equivalent mm
A	1.031	+0.0008	26.20
C	0.105	+0.002	2.67
D	1.043	+0.0012	26.49
D_1	0.977	+0.0012	24.82
E (Note 1)	0.906	−0.002	23.00
F	1.085	+0.0008	27.56
G	1.614	+0.0008	41.0
H	0.172	−0.0008	4.37
L	0.610	−0.0008	15.49
M	0.945	−0.002	24.00
N	0.118	±0.008	3.0
P	0.945	−0.002	24.00
S (Note 1)	0.305	−0.002	7.75
T	0.760	−0.002	19.30
X	0.355 (Note 2)	+0.001	0.89 (Note 2)
Y	0.040	±0.004	1.0
Z	0.866	±0.004	22.0
α (degrees)	30°	±30'	30°

NOTES

1 Dimensions E and S are required for compliance with IEC publications. It is not a part of this American National Standard.

2 Future objective: 0.040 in (1.02 mm).

The form of the screw threads shall be in accordance with the dimensions shown in ANSI C81.62, Standard Sheet 2-158.

Purpose
To check those holder dimensions that relate to contact-making with the lamps.

For details of E26d lampholders, see ANSI C81.62, Standard Sheet 2-158.

Testing
Screw the gauge fully into the holder and check the indicator lamps.

Copyright National Electrical Manufacturers Association
Provided by IHS under license with NEMA
No reproduction or networking permitted without license from IHS
Not for Resale

Threaded Gauge for Testing Unacceptable Contact-Making in E26d Double-Contact Medium-Screw Lampholders

ANSI C81.63-1991
Std Sheet 3-179-1

The drawing is intended only to illustrate essential dimensions of the gauge.

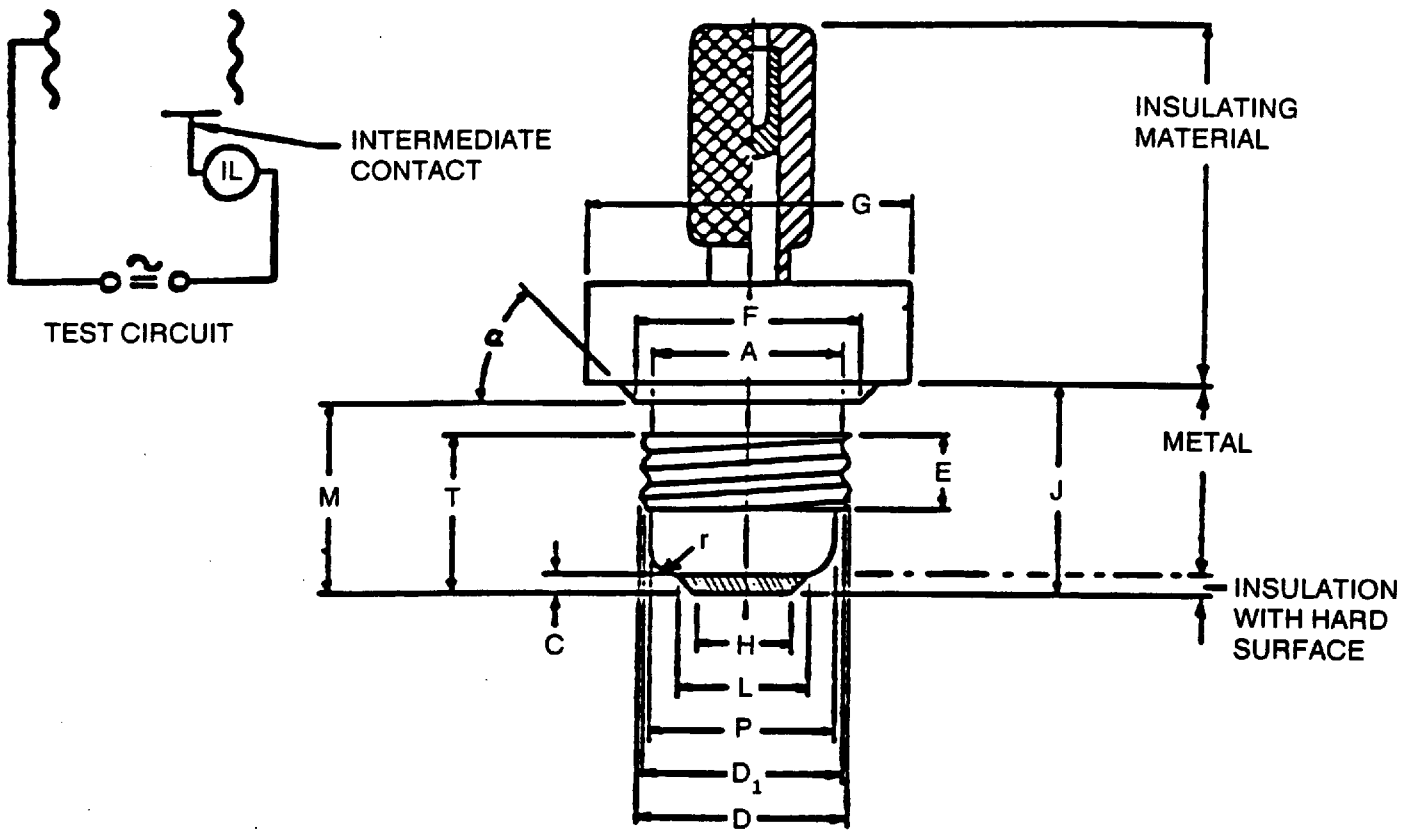

Copyright National Electrical Manufacturers Association
Provided by IHS under license with NEMA
No reproduction or networking permitted without license from IHS
Not for Resale

ANSI C81.63-1991
Std Sheet 3-179-1

Reference	Dimension in	Tolerance in	Nearest metric equivalent mm
A	0.965	±0.002	24.51
C	0.129	−0.001	3.28
D	1.036	+0.0012	26.31
D_1	0.970	+0.0012	24.64
E	0.436	±0.002	11.07
F	1.085	+0.0008	27.56
G	1.609	±0.005	40.87
H	0.360	±0.001	9.14
J	1.010	+0.002	25.65
L	0.602	−0.001	15.29
M	0.950	−0.002	24.13
P	0.945	−0.002	24.00
T	0.850	±0.002	21.59
r	0.125	±0.005	3.18
α (degrees)	45°	±30'	45°

The form of the screw threads shall be in accordance with the dimensions shown in ANSI C81.62, Standard Sheet 2-158.

Purpose
To check for undesirable contact that might occur between the intermediate contact of an E26 double-contact lampholder and the shell of an E26 single-contact base.

For details of E26d lampholders, see ANSI C81.62, Standard Sheet 2-158.

Testing
Screw the gauge fully into the holder and check the indicator lamps.

Copyright National Electrical Manufacturers Association
Provided by IHS under license with NEMA
No reproduction or networking permitted without license from IHS
Not for Resale

Gauge for Testing Contact-Making of E39 Mogul Screw Based Lamps

ANSI C81.63a-1993
Std Sheet 3-187-2

The drawing is intended only to illustrate essential dimensions of the gauge.

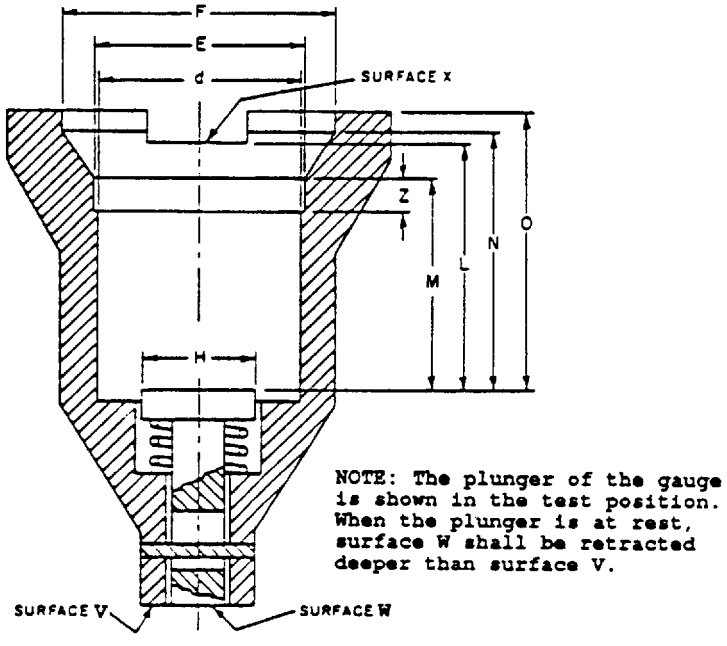

Reference	Dimension (inch)	Tolerance (inch)	Nearest Metric Equivalent (millimeters)
E (dia)	1.700	-0.001	43.18
F (dia)	2.500	-0.001	63.50
H (dia)	0.630	-0.004	16.00
L	1.800	+0.002	45.72
M	1.611	+0.001	40.92
N	2.211	+0.001	56.16
O	2.400	+0.003	60.96
Z	0.410	±0.004	10.41
d (dia)	1.562	-0.001	39.67

Purpose
To check the lamp dimensions, particularly the combination of base length and bulb shoulder shape, for their effect on contact making in the lampholder.

For details of the E39 base, see ANSI C81.61-1991, Standard Sheet 1-185.

Testing
Push the base of the lamp into the gauge unit until it stops and check the relationship of gauge surfaces W and V. Also, check for the presence of any conductive material above gauge surface X.

Copyright National Electrical Manufacturers Association
Provided by IHS under license with NEMA
No reproduction or networking permitted without license from IHS
Not for Resale

Threaded "Go" Gauge for E39 Mogul Screw Based Lamps

ANSI C81.63a-1993
Std Sheet 3-185-2

The drawing is intended only to illustrate essential dimensions of the gauge.

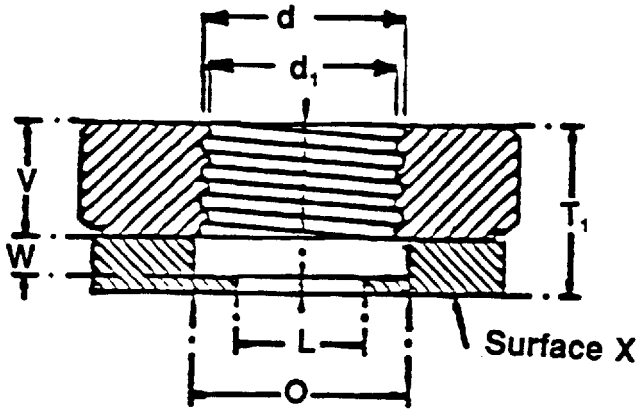

Reference	Dimension (inch)	Tolerance (inch)	Nearest Metric Equivalent (millimeters)
V	0.866	±0.005	22.00
W	0.236	—	5.99
L	1.063	±0.005	27.00
O	1.614	±0.01	41.00
T_1	1.190	-0.001	30.23
d	1.558	+0.0012	39.56
d_1	1.458	+0.0012	37.02

The form of the screw threads shall be in accordance with the dimensions shown on ANSI C81.61-1991, Standard Sheet 1-185.

NOTE: The metric equivalents for dimensions d and d_1 are rounded downward to achieve better international harmonization.

Purpose

To check thread diameter (dimensions d and d_1) and threaded length (dimension T_1) on E39 mogul screw bases on finished lamps. See ANSI C81.61-1991, Standard Sheet 1-185.

Testing

Screw the lamp into the gauge and check for contact at surface X. Remove the lamp and count the number of turns for disengagement.

Copyright National Electrical Manufacturers Association
Provided by IHS under license with NEMA
No reproduction or networking permitted without license from IHS
Not for Resale

"Not-Go" Ring Gauge for E39 Mogul Screw Based Lamps

ANSI C81.63a-1993
Std Sheet 3-186-2

The drawing is intended only to illustrate essential dimensions of the gauge.

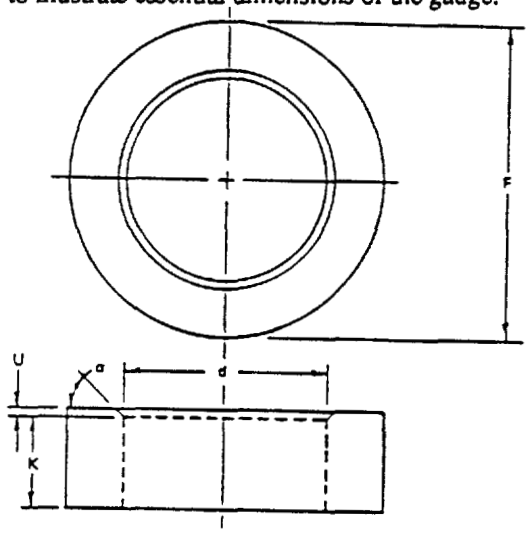

Reference	Dimension (inch)	Tolerance (inch)	Nearest Metric Equivalent (millimeters)
F	2.2	Approximate	55
K	0.945	±0.002	24.0
d	1.537	-0.0005	39.04
U	0.039	±0.005	1.0
α	45°	Nominal	45°

Mass (pounds)	Tolerance	Nearest Metric Equivalent (grams)
0.51	±10%	230

Purpose
To check the minimum major diameter of the screw threads on finished lamps. For details of E39 bases, see ANSI C81.61-1991, Standard Sheet 1-185.

Testing
Place the chamfered end of the gauge over the base threads of the lamp, held base-up, and check the position of the center contact relative to the opposite surface of the gauge.

Copyright National Electrical Manufacturers Association
Provided by IHS under license with NEMA
No reproduction or networking permitted without license from IHS
Not for Resale

Threaded Gauge for Testing Contact Making of E39 Mogul Screw Lampholders

ANSI C81.63a-1993
Std Sheet 3-192-2

The drawing is intended only to illustrate essential dimensions of the gauge.

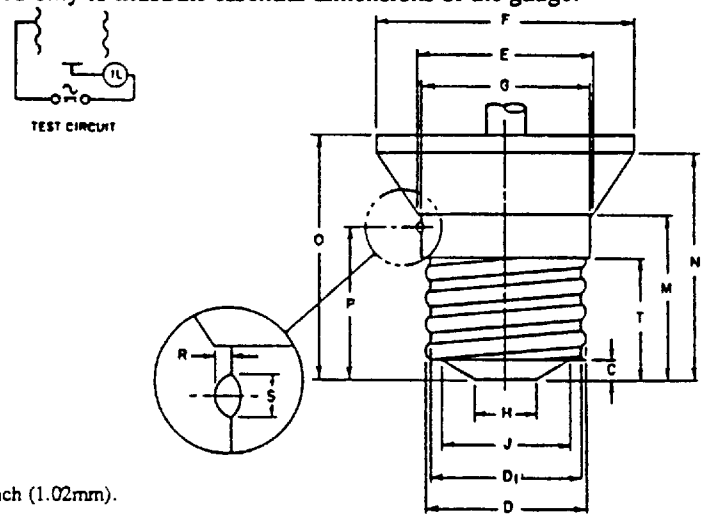

• Future objective: 0.010 inch (1.02mm).

Reference	Dimension (inch)	Tolerance (inch)	Nearest Metric Equivalent (millimeters)
C	0.187	-0.005	4.75
D	1.558	+0.0012	39.56
D_1	1.458	+0.0012	37.02
E	1.700	+0.002	43.18
F	2.500	+0.002	63.50
G	1.620	+0.001	41.15
H	0.610	-0.002	15.49
J	1.250	-0.002	31.75
M	1.611	-0.002	40.92
N	2.211	-0.002	56.16
O	2.400	±0.005	60.96
P	1.500	+0.005	38.10
R	0.035*	+0.001	0.89*
S (dia)	0.100	+0.005	2.54
T	1.187	-0.002	30.15

The form of the screw threads shall be in accordance with the dimensions shown on ANSI C81.62-1991, Standard Sheet 2-185.

The sharp part of the edge of the thread at the underside of the gauge shall be broken with a radius of approximately 0.5 mm on "Go" plug gauges as well as on threaded "Go" gauges.

Purpose
To check lampholder dimensions for contact making with a finished lamp. For details of the E39 lampholders, see ANSI C81.62-1991, Standard Sheet 2-185.

Testing
Screw the gauge fully into the lampholder and check the indicator lamp. Also, check the clearance between the gauge and the upper edge of the holder with the appropriate feeler gauge.

Copyright National Electrical Manufacturers Association
Provided by IHS under license with NEMA
No reproduction or networking permitted without license from IHS
Not for Resale

Threaded "Go" Gauge for E39 Mogul Screw Lampholders

ANSI C81.63a-1993
Std Sheet 3-190-2

The drawing is intended only to illustrate essential dimensions of the gauge.

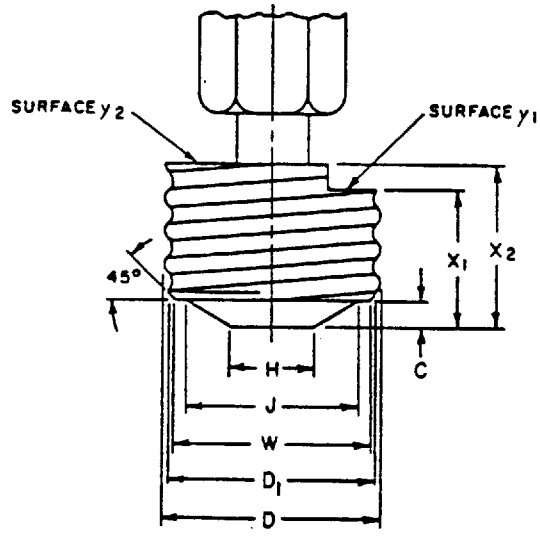

Reference	Dimension (inch)	Tolerance (inch)	Nearest Metric Equivalent (millimeters)
C	0.187	-0.0005	4.75
D	1.565	-0.0012	39.75
D_1	1.465	-0.0012	37.21
H	0.610	-0.001	15.49
J	1.250	-0.001	31.75
W	1.425	±0.001	36.20
X_1	1.000	-0.001	25.40
X_2	1.185	+0.001	30.10

The form of the screw threads shall be in accordance with the dimensions shown on ANSI C81.62-1991, Standard Sheet 2-185.

Purpose

To check the minimum dimensions of the lampholder screw thread and the minimum and maximum values of dimension X. This gauge is not intended for use as a torque testing device. See ANSI C81.63-1991, Standard Sheets 3-195 and 3-196 for torque testing of lampholders with shell-gripping features.

For details of E39 lampholders, see ANSI C81.62-1991, Standard Sheet 2-185.

Testing

Screw the gauge into the lampholder and check the relationship of the threaded portion of the holder with surfaces Y_1 and Y_2.

Copyright National Electrical Manufacturers Association
Provided by IHS under license with NEMA
No reproduction or networking permitted without license from IHS
Not for Resale

Threaded Maximum Torsion Test Device for E39 Mogul Screw Lampholders with Shell Grip Feature

ANSI C81.63a-1993
Std Sheet 3-195-2

The drawing is intended only to illustrate essential dimensions of the gauge.

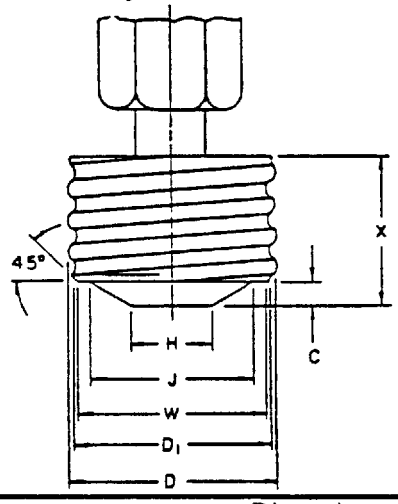

Threaded Surface Hardness:
Rockwell C61-63

Threaded Surface Finish:
8 Microinches

Reference	Dimension (inch)	Tolerance (inch)	Nearest Metric Equivalent (millimeters)
C	0.187	-0.0005	4.75
D	1.553	-0.0012	39.44
D_1	1.453	-0.0012	36.90
H	0.610	-0.003	15.49
J	1.250	-0.003	31.75
W	1.425	±0.001	36.20
X	1.185	+0.020	30.10

NOTES:

(1)The form of the screw threads shall be in accordance with the dimensions shown on ANSI C81.61-1991, Standard Sheet 1-185.

(2)This test plug is designed to simulate an unmounted E39 mogul screw base. Dimension D (1.553 in [39.44 mm]) is used because the allowance to 1.558 in. (39.58 mm) for out-of-roundness of a base on a finished lamp (as shown in ANSI C81.61-1991, Standard Sheet 1-185) probably can be absorbed by flexure of the gripping system.

Purpose

To check new, unused, fully-assembled lampholders with shell gripping features in regards to acceptance of a maximum size base. This test is not appropriate for used and weathered holders that may have uncontrolled characteristics contributing to the insertion torque. This test service does not apply to lampholders that employ gripping action at locations other than the screw shell of the lamp base.

For details of E39 lampholders, see ANSI C81.62-1991, Standard Sheet 2-185.

Testing

The lampholders shall be tested as follows. A calibrated torque wrench shall be used as equipment.

(1) Start screwing the test plug into the lampholder by hand. It shall be possible to screw the plug until fully seated without exceeding the specified torque value.

(2) After completing step 1, without changing the position of the test service, it shall be possible to remove the plug from the lampholder without exceeding the specified removal torque value.

Copyright National Electrical Manufacturers Association
Provided by IHS under license with NEMA
No reproduction or networking permitted without license from IHS
Not for Resale

Threaded Minimum Torsion Test Device for E39 Mogul Screw Lampholders with Shell Grip Feature

The drawing is intended only to illustrate essential dimensions of the gauge.

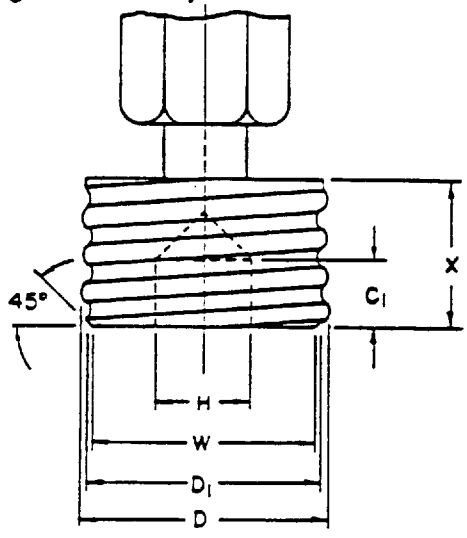

Thread Surface Harness:
Rockwell C60, Minimum

Thread Surface Finish:
8 Microinches

Reference	Dimension (inch)	Tolerance (inch)	Nearest Metric Equivalent (millimeters)
C_1	0.250	+0.010	6.35
D	1.537	+0.0012	39.04
D_1	1.437	+0.0012	36.50
H (Note 1)	0.750	±0.003	19.05
W	1.425	±0.001	36.20
X	1.000	±0.020	25.40

NOTES:
(1) Dimension H may be adjusted to avoid interference with the center contact of certain lampholder designs.
(2) The form of the screw threads shall be in accordance with the dimensions shown on ANSI C81.61-1991, Standard Sheet 1-185.

Purpose

To check new, unused, fully-assembled lampholders with shell gripping features in regards to removal and unintentional loosening of a finished lamp. This test is not appropriate for used and weathered holders that may have uncontrolled characteristics contributing to withdrawal torque. This test service does not apply to lampholders that employ gripping action at locations other than the screw shell of the base.

For details of E39 lampholders, see ANSI C81.62-1991, Standard Sheet 2-185.

Testing

This test is to be made after the lampholder under test has been evaluated by the test plug shown in Standard Sheet 3-195. The center contact may be removed for test purposes if interference with dimension H still occurs.

A calibrated torque wrench is required as equipment in addition to this test plug. After inserting the device fully into the lampholder, the specified minimum torque shall be applied to remove it.

Copyright National Electrical Manufacturers Association
Provided by IHS under license with NEMA
No reproduction or networking permitted without license from IHS
Not for Resale

"Not-Go" Plug Gauge for E39 Mogul Screw Lampholders

The drawing is intended only to illustrate essential dimensions of the gauge.

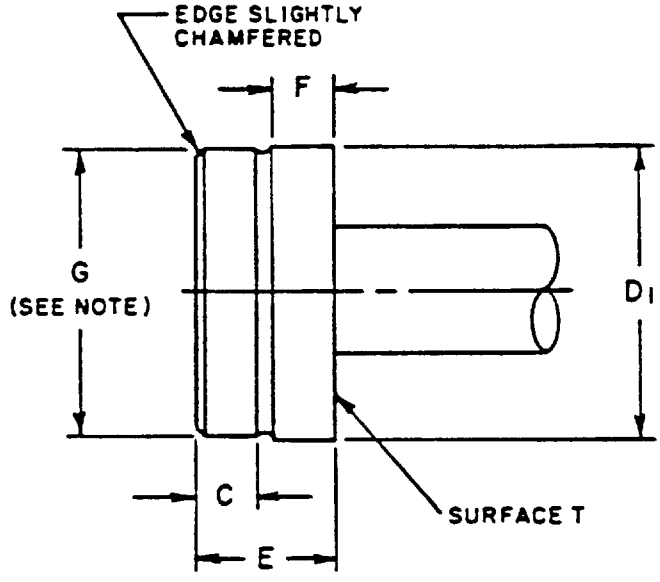

Reference	Dimension (inch)	Tolerance (inch)	Nearest Metric Equivalent (millimeters)
C	0.312	-0.005	7.92
D_1	1.477	+0.0005	37.52
E	0.687	±0.005	17.45
F	0.312	-0.005	7.92
G (Note)	1.465	-0.001	37.21

NOTE: For centering purposes only.

The mass of the gauge shall be at least 680 grams (23.985 oz) and not more than 900 grams (31.746 oz).

Purpose

To check the maximum minor diameter D_1 of the screw threads. For details of E39 lampholders, see ANSI C81.62-1991, Standard Sheet 2-185.

Testing

Attempt to insert the gauge into the lampholder and check the relationship of the thread to surface T.

Copyright National Electrical Manufacturers Association
Provided by IHS under license with NEMA
No reproduction or networking permitted without license from IHS
Not for Resale

Threaded "Go" Gauge for Position-Oriented EP39 Mogul-Screw-Based Lamps

The drawing is intended only to illustrate essential dimensions of the gauge.

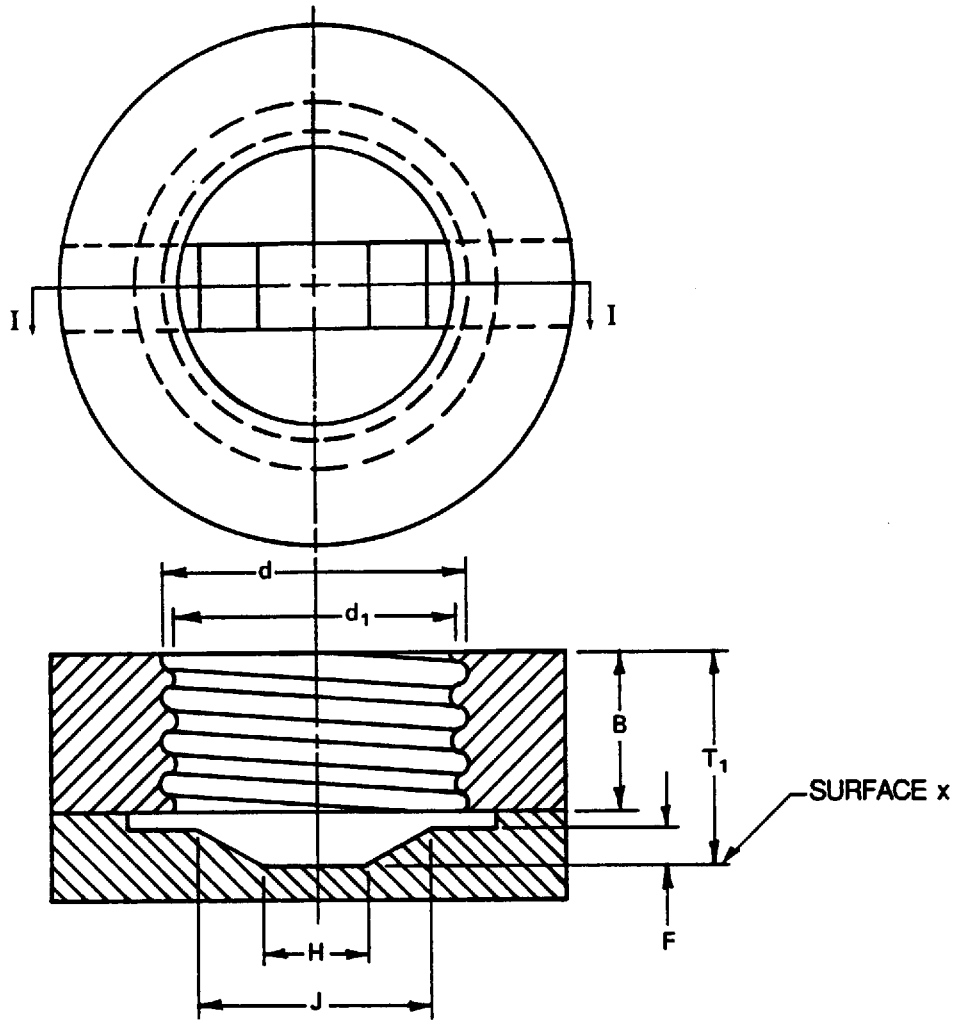

Section I-I

Copyright National Electrical Manufacturers Association
Provided by IHS under license with NEMA
No reproduction or networking permitted without license from IHS
Not for Resale

ANSI C81.63-1991
Std Sheet 3-202-1

Reference	Dimension in	Tolerance in	Nearest metric equivalent mm
B	0.626	±0.005	15.90
F	0.187	−0.001	4.75
H	0.595	±0.001	15.11
J	1.250	+0.001	31.75
T_1	0.950	−0.001	24.13
d	1.560	+0.0012	39.62
d_1	1.460	+0.0012	37.08

The form of the screw threads shall be in accordance with the dimensions shown on ANSI C81.61, Standard Sheet 1-202.

Purpose
To check thread diameter (dimensions d and d_1) and threaded length (dimension T_1).

For details of EP39 bases, see ANSI C81.61, Standard Sheet 1-202.

Testing
Screw the lamp into the gauge and check for contact at surface x.

Copyright National Electrical Manufacturers Association
Provided by IHS under license with NEMA
No reproduction or networking permitted without license from IHS
Not for Resale

Gauge for Testing Contact-Making of Position-Oriented EP39 Mogul-Screw-Based Lamps

The drawing is intended only to illustrate essential dimensions of the gauge.

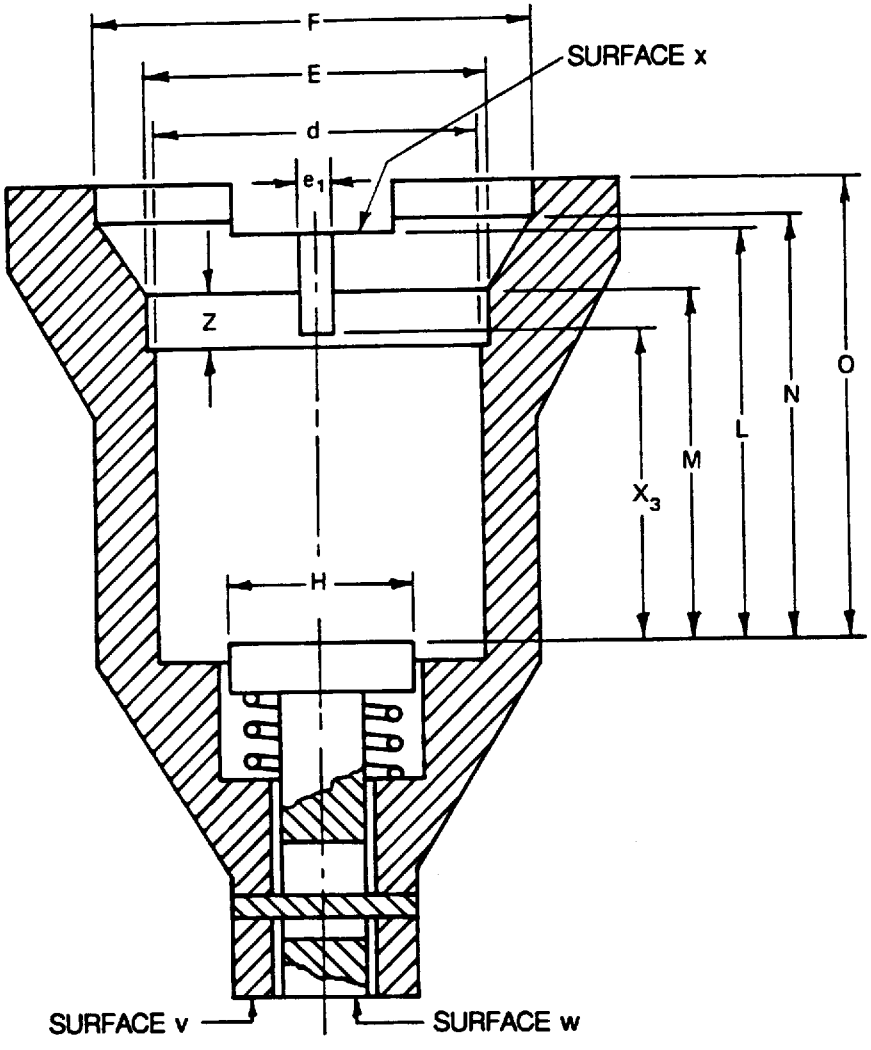

NOTE – The plunger of the gauge is shown in the test position. When the plunger is at rest, surface w shall be retracted deeper than surface v.

Copyright National Electrical Manufacturers Association
Provided by IHS under license with NEMA
No reproduction or networking permitted without license from IHS
Not for Resale

Reference	Dimension in	Tolerance in	Nearest metric equivalent mm
E (dia)	1.700	–0.001	43.18
F (dia)	2.500	–0.001	63.50
H (dia)	0.630	–0.004	16.00
L	1.800	+0.002	45.72
M	1.611	+0.001	40.92
N	2.211	+0.001	56.16
O	2.400	+0.003	60.96
X_3	0.9525	–0.0005	24.19
Z	0.410	±0.004	10.41
d (dia)	1.565	–0.001	39.75
e_1	0.100	+0.001	2.54

Purpose
To check the lamp dimensions, particularly the combination of base length and bulb shoulder shape, for their effect on contact-making in the lampholder.

For details of EP39 bases, see ANSI C81.61, Standard Sheet 1-202.

Testing
Push the base of the lamp into the gauge until it stops and check the relationship of surfaces w and v. Also, check for the presence of any conductive material above surface x.

Copyright National Electrical Manufacturers Association
Provided by IHS under license with NEMA
No reproduction or networking permitted without license from IHS
Not for Resale

Threaded Gauge for Testing Minimum Insertion Clearance of EP39 Position-Oriented Mogul-Screw Lampholders

The drawing is intended only to illustrate essential dimensions of the gauge.

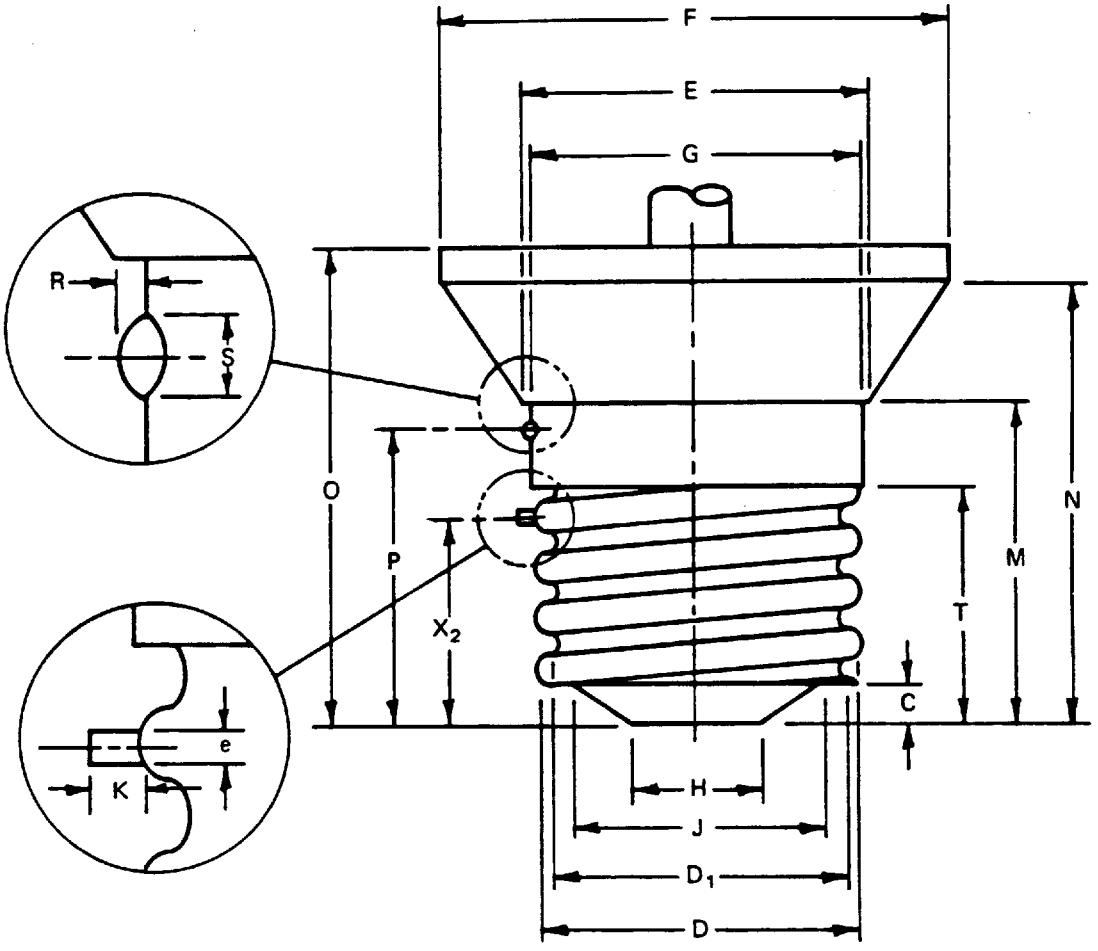

Copyright National Electrical Manufacturers Association
Provided by IHS under license with NEMA
No reproduction or networking permitted without license from IHS
Not for Resale

Reference	Dimension in	Tolerance in	Nearest metric equivalent mm
C	0.187	−0.0005	4.75
D	1.560	+0.0012	39.62
D_1	1.460	+0.0012	37.08
E	1.700	+0.002	43.18
F	2.500	+0.002	63.50
G	1.620	+0.001	41.15
H	0.610	−0.002	15.49
J	1.250	−0.002	31.75
K	0.093	+0.001	2.36
M	1.611	−0.002	40.92
N	2.211	−0.002	56.16
O	2.400	±0.005	60.96
P	1.500	+0.005	38.10
R	0.035 (Note)	+0.001	0.89 (Note)
S (dia)	0.100	+0.005	2.54
T	1.187	−0.002	30.15
X_2	1.050	+0.001	26.67
e	0.095	±0.0005	2.41

NOTE – Future objective: 0.040 in (1.02 mm).

The form of the screw threads shall be in accordance with the dimensions shown in ANSI C81.62, Standard Sheet 2-202.

Purpose
To check lampholders for clearance of maximum-length bases.

For details of EP39 lampholders, see ANSI C81.62, Standard Sheet 2-202.

Testing
Screw the gauge into the lampholder until the pin engages the pin-lock stop.

Copyright National Electrical Manufacturers Association
Provided by IHS under license with NEMA
No reproduction or networking permitted without license from IHS
Not for Resale

Threaded Gauge for Testing Contact-Making of EP39 Position-Oriented Mogul-Screw Lampholders

The drawing is intended only to illustrate the essential dimensions of the gauge.

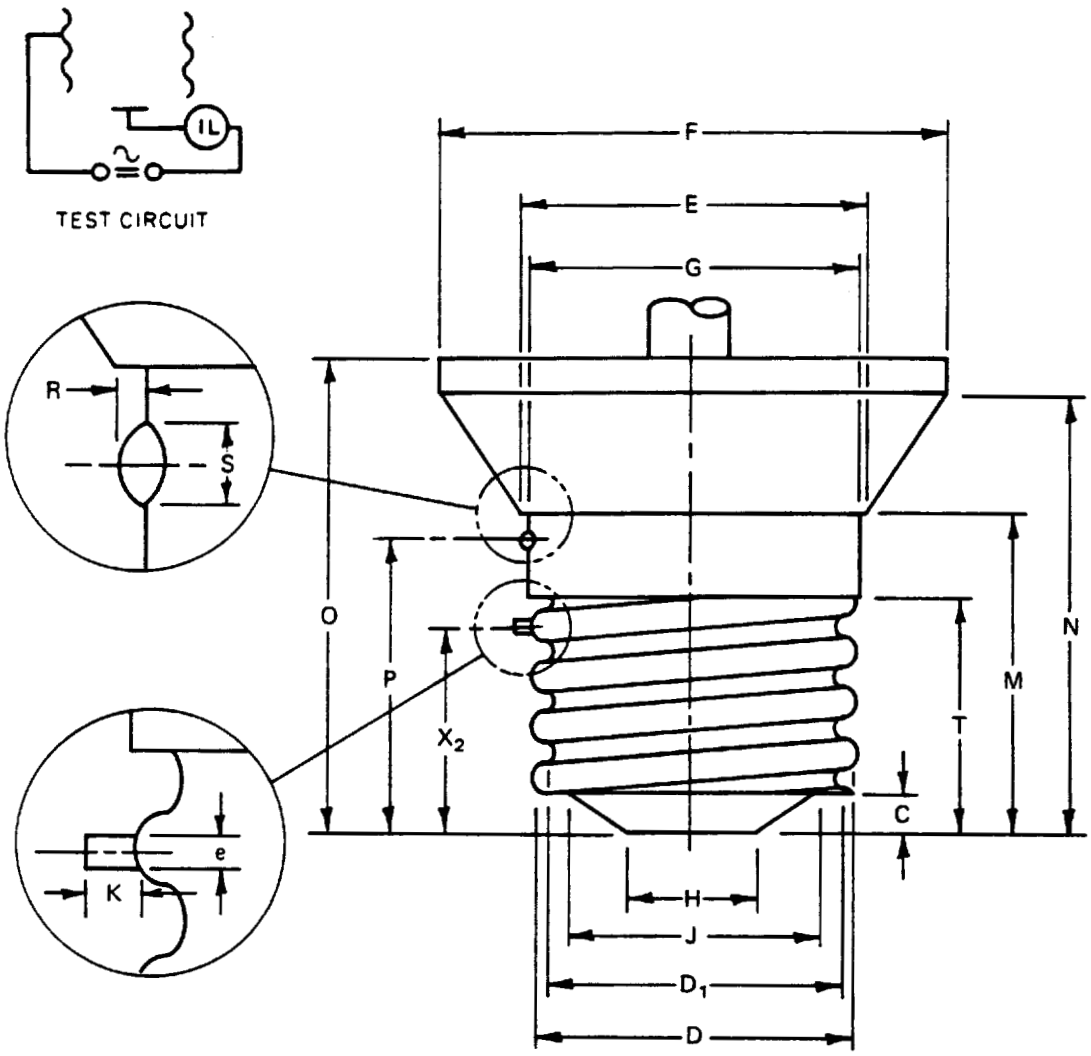

Copyright National Electrical Manufacturers Association
Provided by IHS under license with NEMA
No reproduction or networking permitted without license from IHS
Not for Resale

Reference	Dimension in	Tolerance in	Nearest metric equivalent mm
C	0.187	–0.0005	4.75
D	1.560	+0.0012	39.62
D_1	1.460	+0.0012	37.08
E	1.700	+0.002	43.18
F	2.500	+0.002	63.50
G	1.620	+0.001	41.15
H	0.610	–0.002	15.49
J	1.250	–0.002	31.75
K	0.093	+0.001	2.36
M	1.611	–0.002	40.92
N	2.211	–0.002	56.16
O	2.400	±0.005	60.96
P	1.500	+0.005	38.10
R	0.035 (Note)	+0.001	0.89 (Note)
S (dia)	0.100	+0.005	2.54
T	1.187	–0.002	30.15
X_2	1.000	+0.001	23.40
e	0.095	±0.0005	2.41

NOTE – Future objective: 0.040 in (1.02 mm).

The form of the screw threads shall be in accordance with the dimensions shown in ANSI C81.62, Standard Sheet 2-202.

Purpose
To check lampholders for contact-making with a finished lamp.

For details of EP39 lampholders, see ANSI C81.62, Standard Sheet 2-202.

Testing
Screw the gauge fully into the holder, up to the pin-engaging lock, and check the indicator lamp (IL).

Copyright National Electrical Manufacturers Association
Provided by IHS under license with NEMA
No reproduction or networking permitted without license from IHS
Not for Resale

"Go" Gauge for Single-Pin Fa8 Bases on Finished Lamps

The drawing is intended only to illustrate essential dimensions of the gauge.

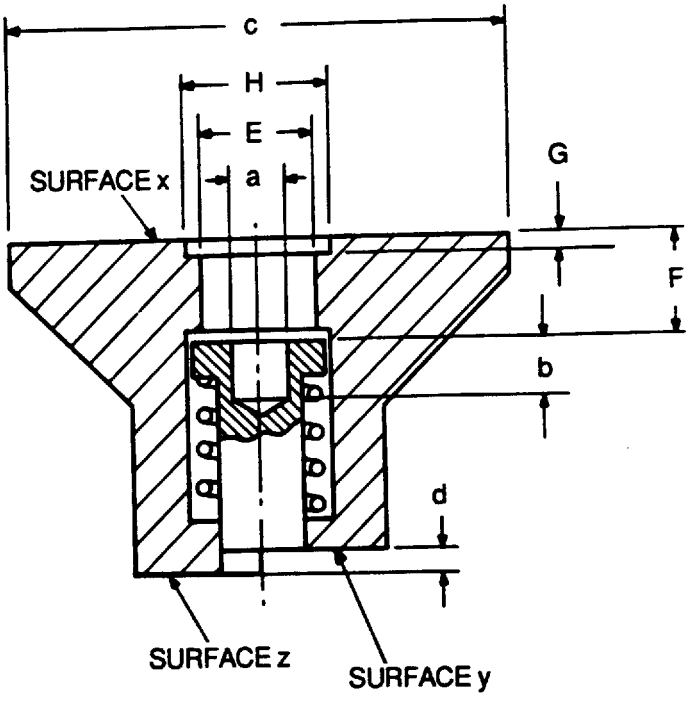

Reference	Dimension in	Tolerance in	Nearest metric equivalent mm
E	0.325	+0.0004	8.26
F	0.271	−0.0004	6.88
G	0.020	+0.0004	0.51
H	0.380	+0.0004	9.65
a	0.177	±0.0002	4.50
b	0.160	±0.02	4.06
c	1.5	approx	38.1
d	0.052	+0.0004	1.32

Purpose
To check pin maximum diameter, minimum and maximum length, boss height maximum, and width maximum.

For details of Fa8 bases, see ANSI C81.61, Standard Sheet 1-250.

Testing
Insert the lamp into the gauge and check for contact at surface x. Also check the relationship of the gauge plunger to surfaces y and z.

Copyright National Electrical Manufacturers Association
Provided by IHS under license with NEMA
No reproduction or networking permitted without license from IHS
Not for Resale

"Not-Go" Gauge for Fa8 Single-Pin Bases on Finished Lamps

The drawing is intended only to illustrate essential dimensions of the gauge.

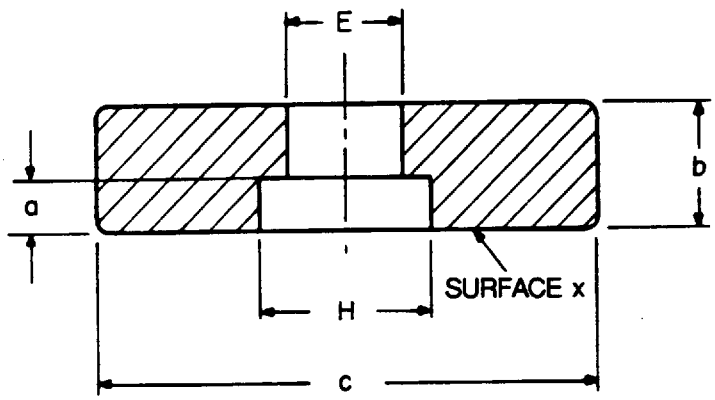

Reference	Dimension in	Tolerance in	Nearest metric equivalent mm
E	0.300	−0.0004	7.62
H	0.475	±0.05	12.06
a	0.118	±0.0004	3.00
b	0.40	approx	1.02
c	1.5	approx	38.1

Purpose
To check the minimum size of pins.

For details of Fa8 bases, see ANSI C81.61, Standard Sheet 1-250.

Testing
Attempt to insert the pin of a base into the gauge and check for contact at surface x.

Copyright National Electrical Manufacturers Association
Provided by IHS under license with NEMA
No reproduction or networking permitted without license from IHS
Not for Resale

"Go" and Contact-Making Gauge for Fa8 Single-Pin Lampholders

The drawing is intended only to illustrate essential dimensions of the gauge.

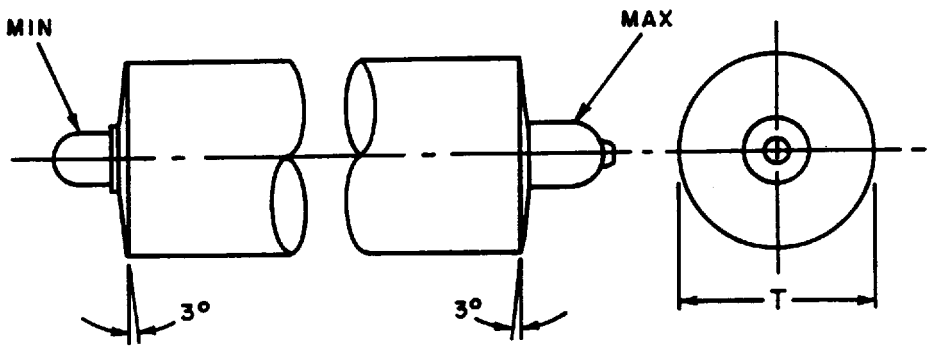

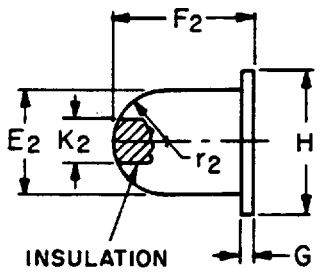

DETAIL OF MINIMUM PIN

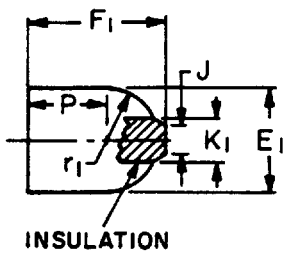

DETAIL OF MAXIMUM PIN

Copyright National Electrical Manufacturers Association
Provided by IHS under license with NEMA
No reproduction or networking permitted without license from IHS
Not for Resale

Reference	Dimension in	Tolerance in	Nearest metric equivalent mm
E_1	0.325	−0.0005	8.26
E_2	0.300	+0.0005	7.62
F_1	0.380	−0.0005	9.65
F_2	0.300	+0.0005	7.62
G	0.020	−0.0005	0.51
H	0.380	+0.0005	9.65
J	0.065	−0.0005	1.65
K_1	0.177	−0.0005	4.50
K_2	0.177	+0.0005	4.50
P	0.1875	−0.0005	4.76
T (Note)	0.860 (T-6)	–	21.84 (T-6)
	1.110 (T-8)	–	28.19 (T-8)
	1.6 (T-12)	–	40.64 (T-12)
r_1	$E_1 + 2$	–	–
r_2	$E_2 + 2$	–	–

NOTE – This dimension is shown separately for T-6, T-8, and T-12 bulb lamps.

Purpose
To check lampholders for acceptance and proper contact-making (at a point other than on the tip of the pin) with regard to a base having maximum pin dimensions, and a base having minimum pin dimensions.

For details of Fa8 lampholders, see ANSI C81.62, Standard Sheet 2-250.

Testing
Insert, first one end and then the other end, of the gauge into the lampholder and rotate in a manner that provides 3 degrees of misalignment between the gauge and the lampholder. The continuity test shall be made at a voltage not greater than 6 V.

Copyright National Electrical Manufacturers Association
Provided by IHS under license with NEMA
No reproduction or networking permitted without license from IHS
Not for Resale

"Go" Gauge for G3.9-Based Lamps

The drawing is intended only to illustrate essential dimensions of the gauge.

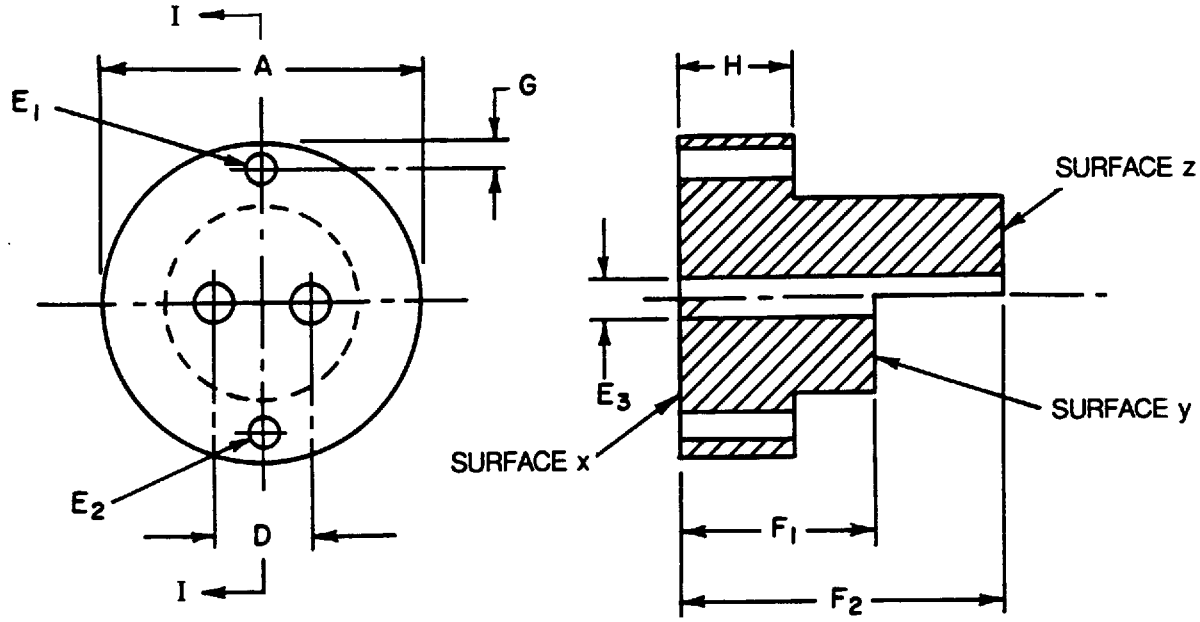

Section I-I

Reference	Dimension mm	Tolerance mm
A	13.00	−0.50
D	3.97	±0.01
E_1	1.54	−0.01
E_2	1.60	+0.01
E_3 (Note)	2.00	+0.01
F_1	7.00	−0.03
F_2	12.00	+0.03
G	2.00	+0.20
H	5.00	+0.20

NOTE – An allowance of 0.40 mm is included to accommodate pin spacing and alignment.

Purpose

To check combined pin diameters, length, and spacing, as well as the individual minimum and maximum pin diameters.

For details of G3.9 bases, see ANSI C81.61, Standard Sheet 1-300.

Copyright National Electrical Manufacturers Association
Provided by IHS under license with NEMA
No reproduction or networking permitted without license from IHS
Not for Resale

Testing
Insert the base on a finished lamp into the gauge until it meets with surface x of the gauge.

Copyright National Electrical Manufacturers Association
Provided by IHS under license with NEMA
No reproduction or networking permitted without license from IHS
Not for Resale

Double-Ended "Go" Gauge for G3.9 Connectors

The drawing is intended only to illustrate essential dimensions of the gauge.

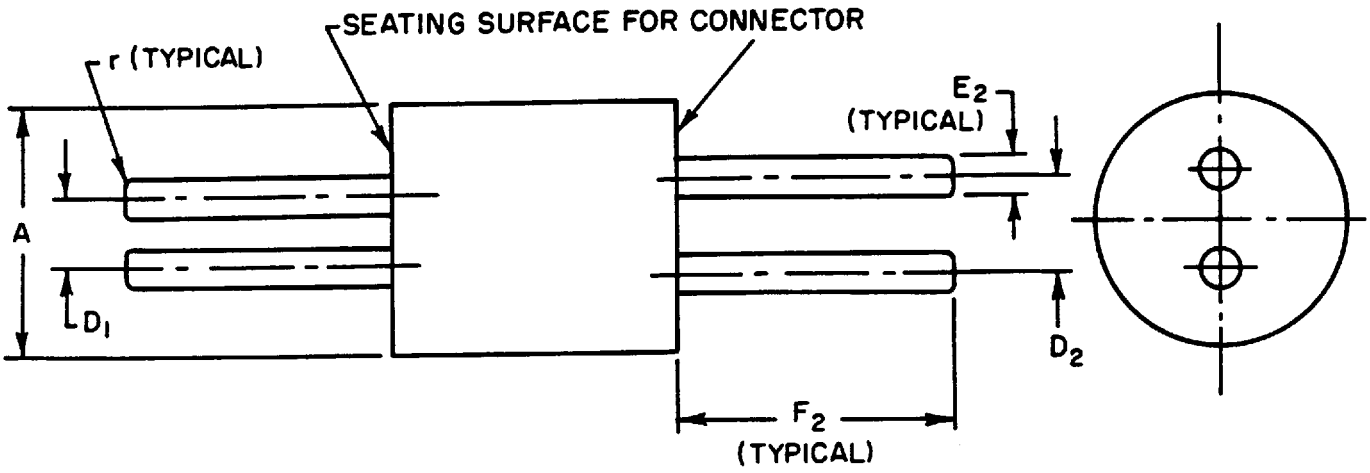

Reference	Dimension mm	Tolerance mm
A	12.00	+0.10
D_1	3.58	−0.01
D_2	4.36	+0.01
E_2	1.62	−0.01
F_2	12.20	−0.10
r	0.30	±0.20

Purpose
To check connectors for accommodation of the base pin diameters and length.

For details of G3.9 connectors, see ANSI C81.62, Standard Sheet 2-300.

Testing
Insert each end of this gauge into the connector.

Copyright National Electrical Manufacturers Association
Provided by IHS under license with NEMA
No reproduction or networking permitted without license from IHS
Not for Resale

Minimum Retention Force Gauge for Contacts of G3.9 Connector

The drawing is intended only to illustrate essential dimensions of the gauge.

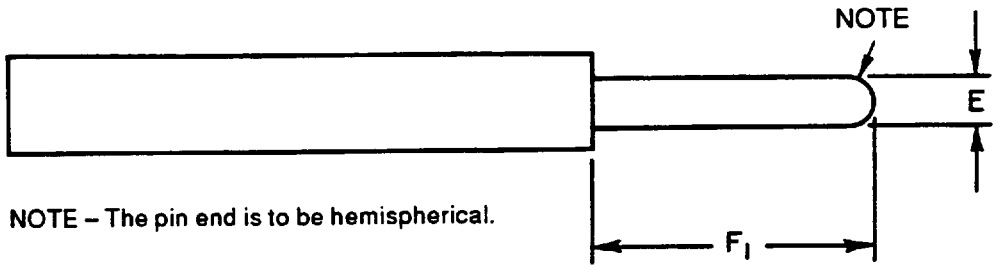

NOTE – The pin end is to be hemispherical.

Reference	Dimension mm	Tolerance mm
E (dia)	1.52	+0.01
F_1	7.00	–0.10

Mass g	Tolerance	Nearest Equivalent lb
350	±10%	0.77

Purpose
To check the minimum retention force of the contacts.

For details of G3.9 connectors, see ANSI C81.62, Standard Sheet 2-300.

Testing
After first checking the connectors for acceptance of the "Go" gauge (ANSI C81.63, Standard Sheet 3-303), insert this gauge into each of the lampholder contacts.

Copyright National Electrical Manufacturers Association
Provided by IHS under license with NEMA
No reproduction or networking permitted without license from IHS
Not for Resale

"GO" GAUGE FOR BI-PIN LAMP BASES

CALIBRE "ENTRE" POUR SOCLES DE LAMPE A DEUX BROCHES

GZ4

Dimensions in millimetres - Dimensions en millimètres

The drawing is intended only to illustrate the essential dimensions of the gauge.
Le dessin a pour seul but d'illustrer les dimensions essentielles du calibre.

For details of bi-pin lamp base GZ4, see sheet 7004-67.
Pour les détails du socle de lampe à deux broches GZ4, voir feuille 7004-67.

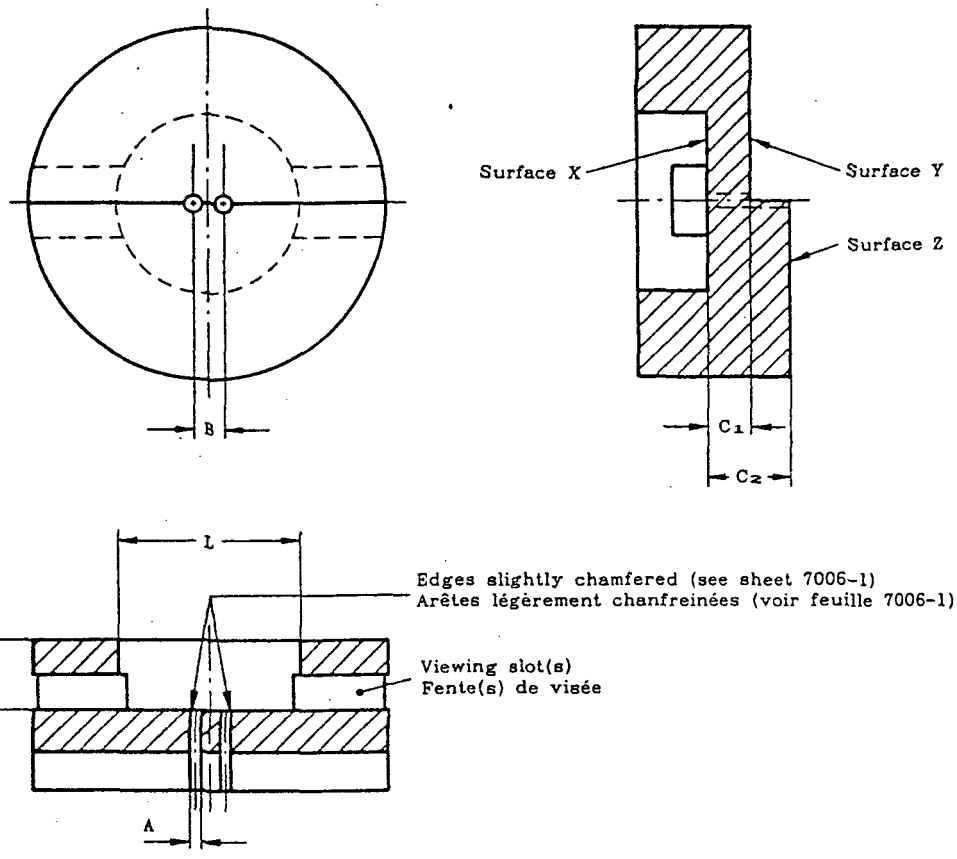

Reference	Dimension	Tolerance
A	1,3	+ 0,01 - 0,0
B	4,0	+ 0,01 - 0,01
C_1	6,0	+ 0,0 - 0,02
C_2	11,5	+ 0,02 - 0,0
L	25,0	+ 0,0 - 0,02
N	10,0	+ 0,02 - 0,0

PURPOSE: To check bi-pin lamp bases GZ4 with regard to dimension C and the fit in the connector.

TESTING: When the lamp is completely inserted in the gauge until the lamp is in contact with surface X, the pins shall be co-planar with or project beyond surface Y, but they shall not project beyond surface Z.

BUT: Vérification des socles à deux broches GZ4 en ce qui concerne dimension C et leur assemblage au connecteur.

ESSAI: Lorsque le socle est complètement introduit dans le calibre, jusqu'à entrer en contact avec la surface X, les broches doivent être coplanaires avec la surface Y ou la dépasser mais ne doivent pas dépasser la surface Z.

Copyright National Electrical Manufacturers Association
Provided by IHS under license with NEMA
No reproduction or networking permitted without license from IHS
Not for Resale

"GO" GAUGE FOR CONNECTOR FOR BI-PIN LAMP BASE

CALIBRE "ENTRE" POUR CONNECTEUR POUR SOCLE DE LAMPES A DEUX BROCHES

GZ4

Dimensions in millimetres - Dimensions en millimètres

The drawing is intended only to illustrate the essential dimensions of the gauge.
Le dessin a pour seul but d'illustrer les dimensions essentielles du calibre.

For details of connector GZ4, see sheet 7005-67.
Pour les détails du connecteur GZ4, voir feuille 7005-67.

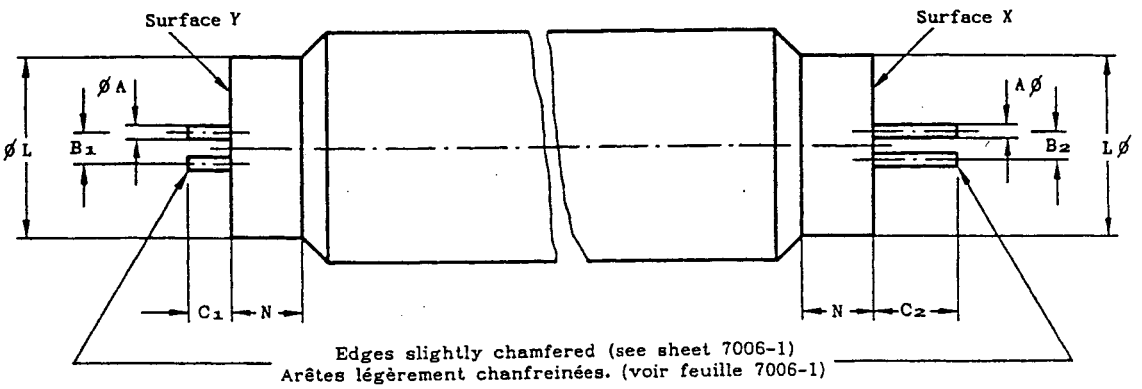

PURPOSE: To check connectors GZ4 with regard to the fit of the lamp base.

TESTING: It shall be possible to insert each end of the gauge in turn, until the appropriate surface X or or Y is in contact with the adjacent surface of the connector.
After this test it shall be verified that the contacts of the connector satisfy the requirements of the gauge for checking the minimum contact force in connectors GZ4 shown on sheet 7006-59A.

BUT: Vérification des connecteurs GZ4 en ce qui concerne leur assemblage au socle.

ESSAI: Il doit être possible d'insérer successivement les broches de chaque extrémité du calibre jusqu'à ce que la surface X ou respectivement la surface Y soit en contact avec la surface adjacente du connecteur.
Après cet essai, on doit vérifier que les contacts du connecteur satisfont aux exigences du calibre de vérification de la force minimale de contact dans les connecteurs GZ4 indiquée sur la feuille 7006-59A.

Reference	Dimension	Tolerance
A	1,06	+ 0,01 - 0,0
B_1	4,26	+ 0,02 - 0,0
B_2	3,74	+ 0,0 - 0,02
C_1	6,0	+ 0,0 - 0,02
C_2	11,5	+ 0,0 - 0,02
L	25,0	+ 0,02 - 0,0
N	10,0	+ 0,0 - 0,02

Copyright National Electrical Manufacturers Association
Provided by IHS under license with NEMA
No reproduction or networking permitted without license from IHS
Not for Resale

"Go" and "Not-Go" Gauge for Miniature-Bipin Bases on Finished Lamps

The drawing is intended only to illustrate essential dimensions of the gauge.

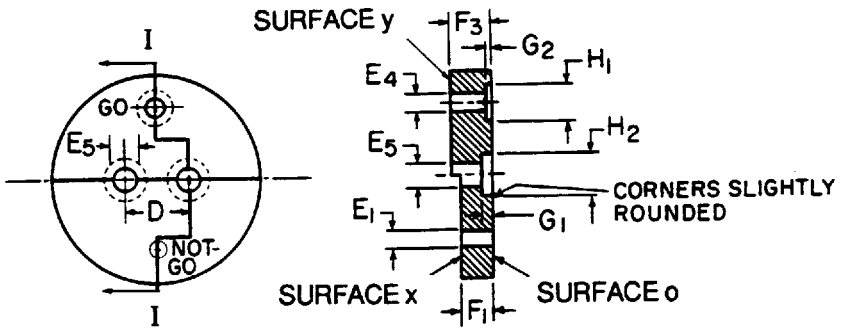

Section I-I

Reference	Dimension in	Tolerance in	Nearest metric equivalent mm
D	0.187	±0.0002	4.74
E_1	0.090	−0.0004	2.29
E_4	0.105	+0.0004	2.67
E_5	0.110	+0.0004	2.79
F_1	0.260	−0.001	6.60
F_3	0.300	+0.001	7.62
G_1	0.040	±0.005	1.02
G_2	0.030	+0.0005	0.76
H_1	0.130	+0.0005	3.3
H_2	0.160	+0.005	4.06

Purpose

To check pin minimum and maximum diameter, minimum and maximum length, and the combination of pin diameter and spacing (including bosses).

For details of G5 bases, see ANSI C81.61, Standard Sheet 1-310.

Testing

Insert the pins of the bases of finished lamps into the two gauge holes E5 at the surface o.

Insert each individual pin into hole E_4 at the surface o.

Attempt to insert each pin into hole E_1.

Copyright National Electrical Manufacturers Association
Provided by IHS under license with NEMA
No reproduction or networking permitted without license from IHS
Not for Resale

PIN TORSION TEST DEVICE FOR G5 MINIATURE BIPIN BASE

The drawing is intended only to illustrate the essential dimensions of the gauge.

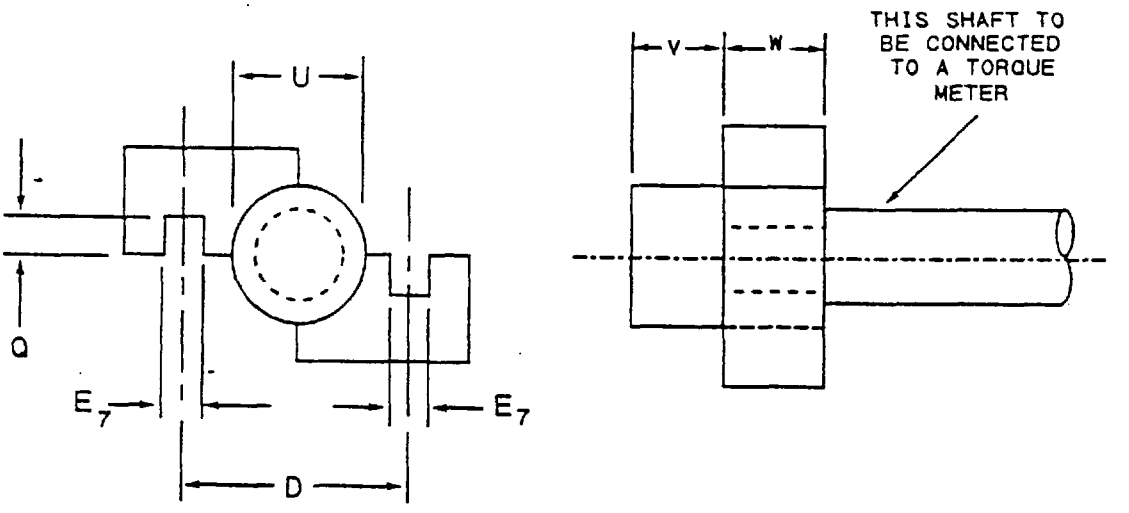

Reference	Dimension (Inch)	Tolerance (inch)	Nearest Metric Equivalent (millimeters)
D	0.187	±0.001	4.75
E_7	0.120	±0.005	3.05
Q	0.050	±0.005	1.27
U	0.031	±0.010	0.79
V	0.180	±0.002	4.57
W	0.025	±0.010	6.35

Note—For base design where the space between pins is on a plane different than the "base face" plane, adjustment to dimensions "V" and/or "U" may be necessary.

Purpose

To provide a standard means of applying a torsion test to the contact pins.

For details of G5 bases, see ANSI C81.61, Standard Sheet 1-310.

Testing

With the test lamp in line with the axis of the shaft of the test device, insert the base pins into the E_7 grooves. Press the base face against the end of the spacer "V" to assure application of the test torque at the proper distance along the base pins. Manually apply a rotational force to the lamp to force the pins into the E_7 grooves. Continue to apply torque to the lamp to reach the value specified on the base sheet on the torque meter and maintain that value for the specified time.

Copyright National Electrical Manufacturers Association
Provided by IHS under license with NEMA
No reproduction or networking permitted without license from IHS
Not for Resale

Copyright National Electrical Manufacturers Association
Provided by IHS under license with NEMA
No reproduction or networking permitted without license from IHS

Not for Resale

"Go" Gauges for G5 Miniature-Bipin Lampholders

Two separate double-ended gauges are required: a minimum pin-spacing gauge and a maximum pin-spacing gauge.

The drawing is intended only to illustrate essential dimensions of the gauge.

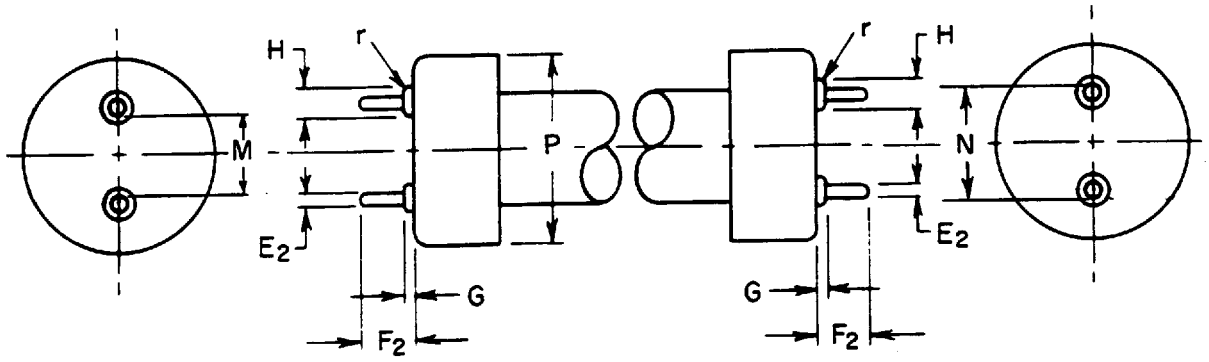

MINIMUM PIN SPACING GAUGE

MAXIMUM PIN SPACING GAUGE

Reference	Dimension in	Tolerance in	Nearest metric equivalent mm
E_2	0.096	–0.0004	2.44
F_2	0.265	–0.001	6.73
G	0.030	–0.0004	0.76
H	0.130	–0.0004	3.3
M	0.082	+0.0005	2.1
N (Note 1)	0.292	–0.0005	7.42
P	0.61	approx	15.5
r	0.015	+0.003	0.38

NOTES

1 The spacing shown is the objective for future design. It is recognized that some designs will not accept a gauge having a dimension N greater than 0.278 in.

2 Pin ends are hemispherical in shape.

3 Pins should be of hardened steel.

Copyright National Electrical Manufacturers Association
Provided by IHS under license with NEMA
No reproduction or networking permitted without license from IHS
Not for Resale

Purpose
To check that lampholders will accept and permit removal of lamps having either minimum spacing between the pins or maximum spacing across the pins.

For details of G5 lampholders, see ANSI C81.62, Standard Sheet 2-310.

Testing
Insert the minimum and maximum pin-spacing gauges in sequence into the lampholder and check for the contact of the gauge face to the holder face.

Check lampholders for good engagement with the pins of the minimum spacing gauge after having been tested with the gauge having pins set at maximum spacing.

During the above procedure, check for contact between the gauge faces and holder faces, ease of insertion and removal and engagement of pins of the minimum spacing gauge with the lampholder contacts.

Refer to the "Gauging" section of ANSI C81.62, Standard Sheet 2-310.

Copyright National Electrical Manufacturers Association
Provided by IHS under license with NEMA
No reproduction or networking permitted without license from IHS
Not for Resale

TORSION TEST DEVICES FOR G5 MINIATURE BIPIN LAMPHOLDER

In making tests on individual inflexible (rigidly fixed) lampholders as called for on ANSI C81.62, Standard Sheet 2-310, the torque or force is applied by means of test devices which simulate bases on finished lamps. Three similar test devices are required. They are referred to as Device A, Device B, and Device C; they differ only in respect to pin diameter and spacing. Device A simulates a base with maximum diameter pins at minimum spacing. Device B simulates minimum diameter pins at maximum spacing. Device C simulates minimum diameter pins at nominal spacing.

The drawing is intended only to illustrate the essential dimensions of the gauges.

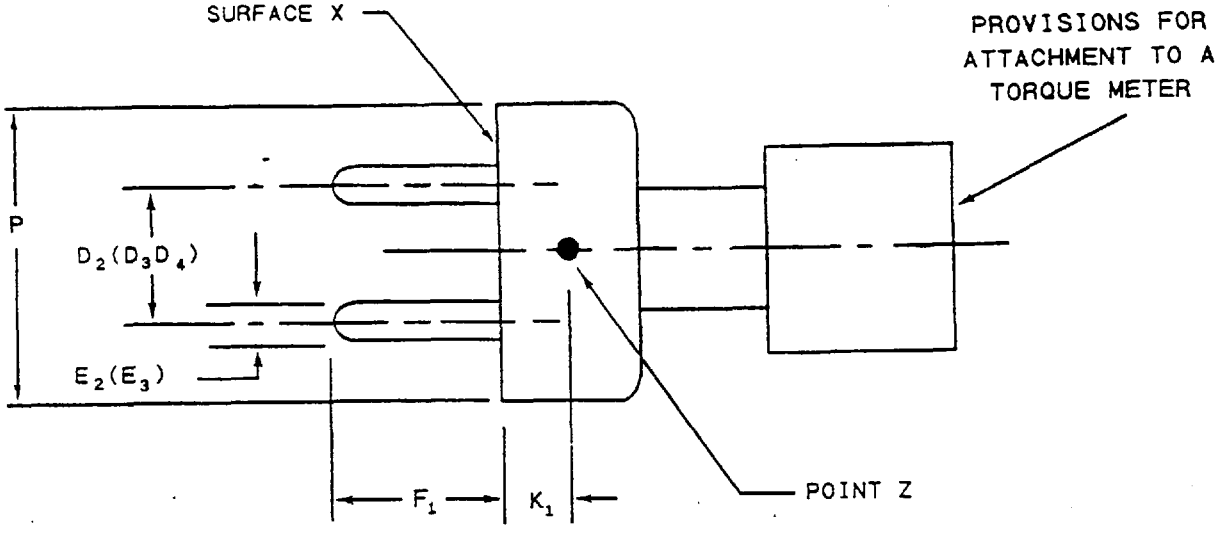

Reference	Dimensions			Tolerance (inches)	Nearest Metric Equivalent (millimeters)
	Device A (inches)	Device B (inches)	Device C (inches)		
D_2	0.177	—	—	±0.0003	4.50
D_3	—	0.206	—	±0.0003	5.23
D_4	—	—	0.187	±0.0003	4.75
E_2	0.096	—	—	±0.0004	2.44
E_3	—	0.090	0.090	±0.0004	2.29
F_1	0.240	0.240	0.240	±0.010	6.10
K_1	0.250	0.250	0.250	approx.	6.35
P	0.610	0.610	0.610	approx.	15.49

1 Notes
2 Pin ends shall be hemispherical in shape.
3 Pins shall be made of hardened steel
4 Point Z is located on the circumference, dimension P, in a place running along the axis of the device and perpendicular to the plane through the pins.
5 Provide means of attaching a pull scale at point Z and the opposite end.

Copyright National Electrical Manufacturers Association
Provided by IHS under license with NEMA
No reproduction or networking permitted without license from IHS
Not for Resale

Purpose

To provide standard means of applying torsion tests to inflexible rotational holders specified for the lampholder on Standard Sheet 2-310.

For details of G5 lampholders, see ANSI C81.62, Standard Sheet 2-310.

Testing

Use Device A and Device B, in sequence, in each lampholder under test.

A calibrated torque meter is required for making this test, in addition to the test devices.

Insert the test device until surface x is in contact with the face of the holder. Torque may be applied to either the test device of the lampholder, the other being rigidly mounted. Maintain the test device in position perpendicular to the holder face, during the test. Measurements shall be made during the insertion motion and withdrawal motion. The readings shall comply with the appropriate limits for inflexible, rotational holders specified for the lampholder on ANSI C81.62, Standard Sheet 2-310.

Copyright National Electrical Manufacturers Association
Provided by IHS under license with NEMA
No reproduction or networking permitted without license from IHS
Not for Resale

Double-Ended Gauge Maximum-Length Lamp and Minimum Lampholder Spacing, for Miniature-Bipin Lampholders

The drawing is intended only to illustrate essential dimensions of the gauge.

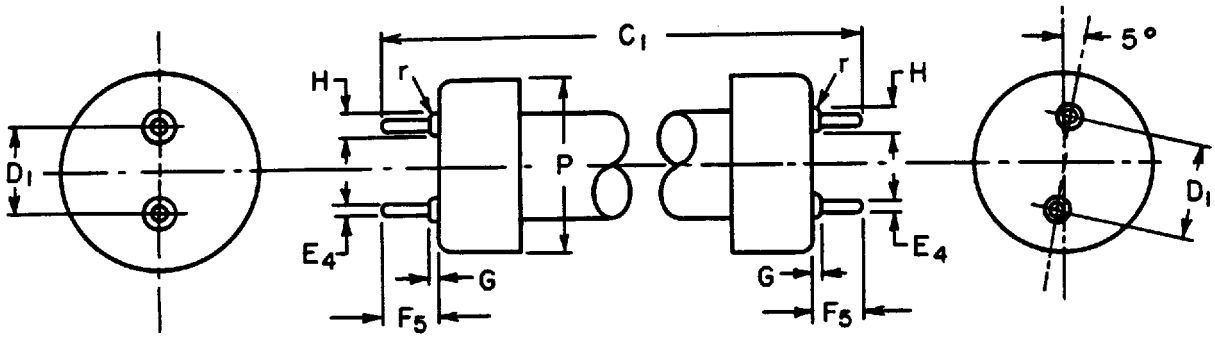

Reference	Dimension in	Tolerance in	Nearest metric equivalent mm
C_1 (Note 1)	8.91	−0.004	226.3
D_1	0.187	±0.0003	4.75
E_4	0.105	−0.0004	2.67
F_5	0.280	±0.0005	7.11
G	0.030	−0.0004	0.76
H	0.130	−0.0004	3.3
P	0.61	approx	15.5
r	0.015	±0.0003	0.38

NOTES

1 For convenience in the use of the gauge, this length represents a lamp having a nominal length of 9 in (228.6 mm).

2 Pin ends are hemispherical in shape.

3 Pins should be of hardened steel.

The two ends of the gauge are so aligned that the plane containing the axes of the pins at one end forms an angle of 5° ± 0.25° with the plane containing the axes of the pins at the other end.

Copyright National Electrical Manufacturers Association
Provided by IHS under license with NEMA
No reproduction or networking permitted without license from IHS
Not for Resale

Purpose
To check a combined pair of lampholders to ascertain that at their minimum permissible spacing (as recommended by the manufacturer) they will accept a lamp of maximum length and with maximum rotational misalignment between the planes of the base pins at the two ends of the lamp.

For details of G5 lampholders, see ANSI C81.62, Standard Sheet 2-310.

Testing
With the holders mounted at their minimum permissible spacing (as recommended by the manufacturer) with respect to a nominal lamp length of 9 in (228.6 mm), insert and remove the gauge.

Copyright National Electrical Manufacturers Association
Provided by IHS under license with NEMA
No reproduction or networking permitted without license from IHS
Not for Resale

Double-Ended Gauge, Minimum-Length Lamp and Maximum Lampholder Spacing, for G5 Miniature-Bipin Lampholders

The drawing is intended only to illustrate essential dimensions of the gauge.

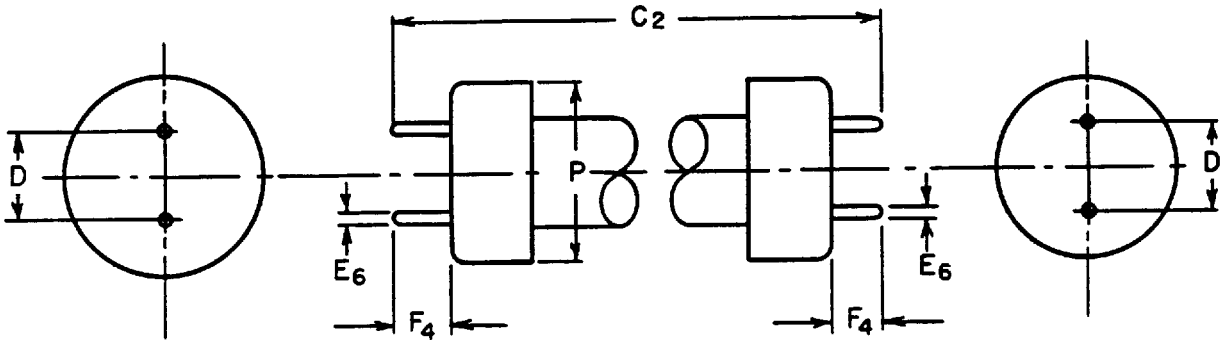

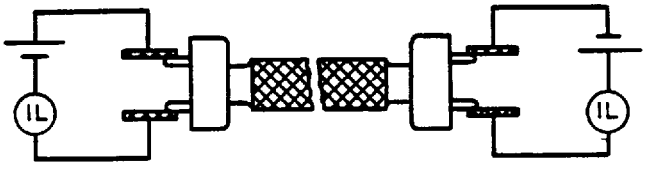

TEST CIRCUIT

Reference	Dimension in	Tolerance in	Nearest metric equivalent mm
C_2 (Note 1)	8.80	+0.004	223.5
D	0.187	±0.0003	4.75
E_6	0.070	+0.0004	1.78
F_4	0.270	±0.0005	6.86
P	0.61	approx	15.5

NOTES

1 For convenience in the use of the gauge, this dimension represents a lamp having a nominal length of 9 in (228.6 mm).

2 Pin ends are hemispherical in shape.

3 Pins should be of hardened steel.

Copyright National Electrical Manufacturers Association
Provided by IHS under license with NEMA
No reproduction or networking permitted without license from IHS
Not for Resale

Purpose

To check a combined pair of lampholders to ascertain that at their maximum permissible spacing (as recommended by the manufacturer), they will make contact with all four pins of a minimum-length lamp.

For details of G5 lampholders, see ANSI C81.62, Standard Sheet 2-310.

Testing

With the holders mounted at their maximum permissible spacing (as recommended by the manufacturer) with respect to a nominal length lamp of 9 in (228.6 mm), insert the gauge and check both indicator lamps (IL) of the test circuit.

Copyright National Electrical Manufacturers Association
Provided by IHS under license with NEMA
No reproduction or networking permitted without license from IHS
Not for Resale

Gauge for G5.3-Based Lamps

The drawing is intended only to illustrate essential dimensions of the gauge.

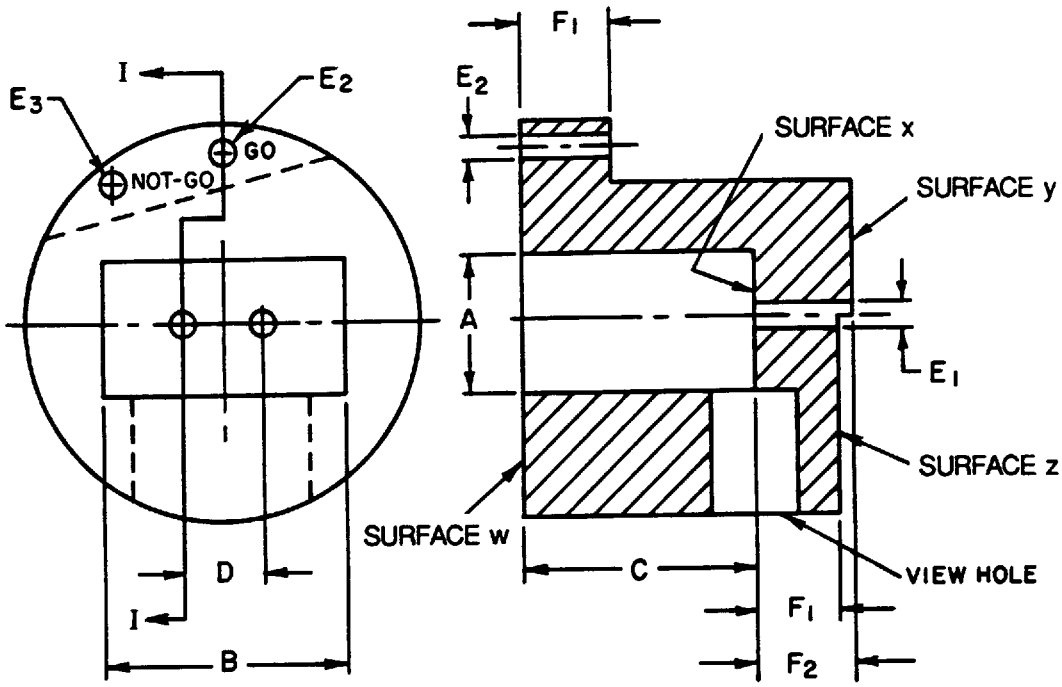

Section I-I

Reference	Dimension in	Tolerance in	Nearest metric equivalent mm
A	0.350	+0.001	8.89
B	0.750	+0.001	19.05
C	0.600	−0.001	15.24
D	0.210	±0.0002	5.33
E_1	0.075	+0.0005	1.91
E_2	0.065	+0.0005	1.65
E_3	0.058	−0.0005	1.47
F_1	0.240	−0.001	6.10
F_2	0.280	+0.001	7.11

Copyright National Electrical Manufacturers Association
Provided by IHS under license with NEMA
No reproduction or networking permitted without license from IHS
Not for Resale

ANSI C81.63-1991
Std Sheet 3-320-1

Purpose
To check combined pin diameters and displacement, individual minimum and maximum pin diameters and lengths, minimum base height, and maximum base length and width.

For details of G5.3 bases, see ANSI C81.61, Standard Sheet 1-320.

Testing
Insert the base on a finished lamp into the gauge until the reference plane of the base meets with surface x of the gauge.

Each individual pin shall be tested for diameter in holes E_2 and E_3.

Copyright National Electrical Manufacturers Association
Provided by IHS under license with NEMA
No reproduction or networking permitted without license from IHS
Not for Resale

"Go" Gauge for G5.3 Lampholders

The drawing is intended only to illustrate essential dimensions of the gauge.

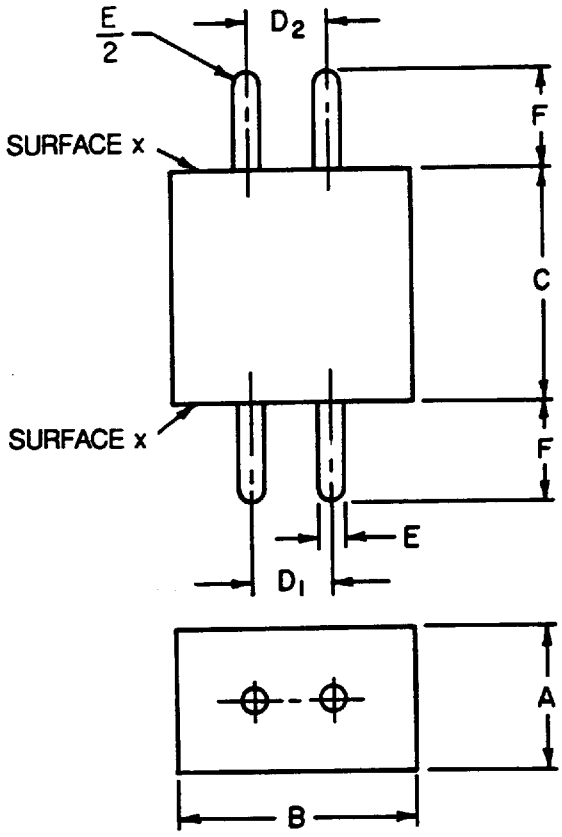

Reference	Dimension in	Tolerance in	Nearest metric equivalent mm
A	0.352	−0.001	8.94
B	0.752	−0.001	19.10
C	0.598	+0.001	15.20
D_1	0.220	±0.0002	5.59
D_2	0.200	±0.0002	5.08
E	0.066	−0.0005	1.68
F	0.282	−0.001	7.16

Copyright National Electrical Manufacturers Association
Provided by IHS under license with NEMA
No reproduction or networking permitted without license from IHS
Not for Resale

ANSI C81.63-1991
Std Sheet 3-326-1

Purpose

To check base length, width, and height along with pin diameter, length, and spacing.

For details of G5.3 lampholders, see ANSI C81.62, Standard Sheet 2-320.

Testing

Insert each end of gauge into the lampholder and check for seating of surface x on the reference plane of the holder.

Copyright National Electrical Manufacturers Association
Provided by IHS under license with NEMA
No reproduction or networking permitted without license from IHS
Not for Resale

"Go" Gauge for GX5.3-Based Lamps

The drawing is intended only to illustrate essential dimensions of the gauge.

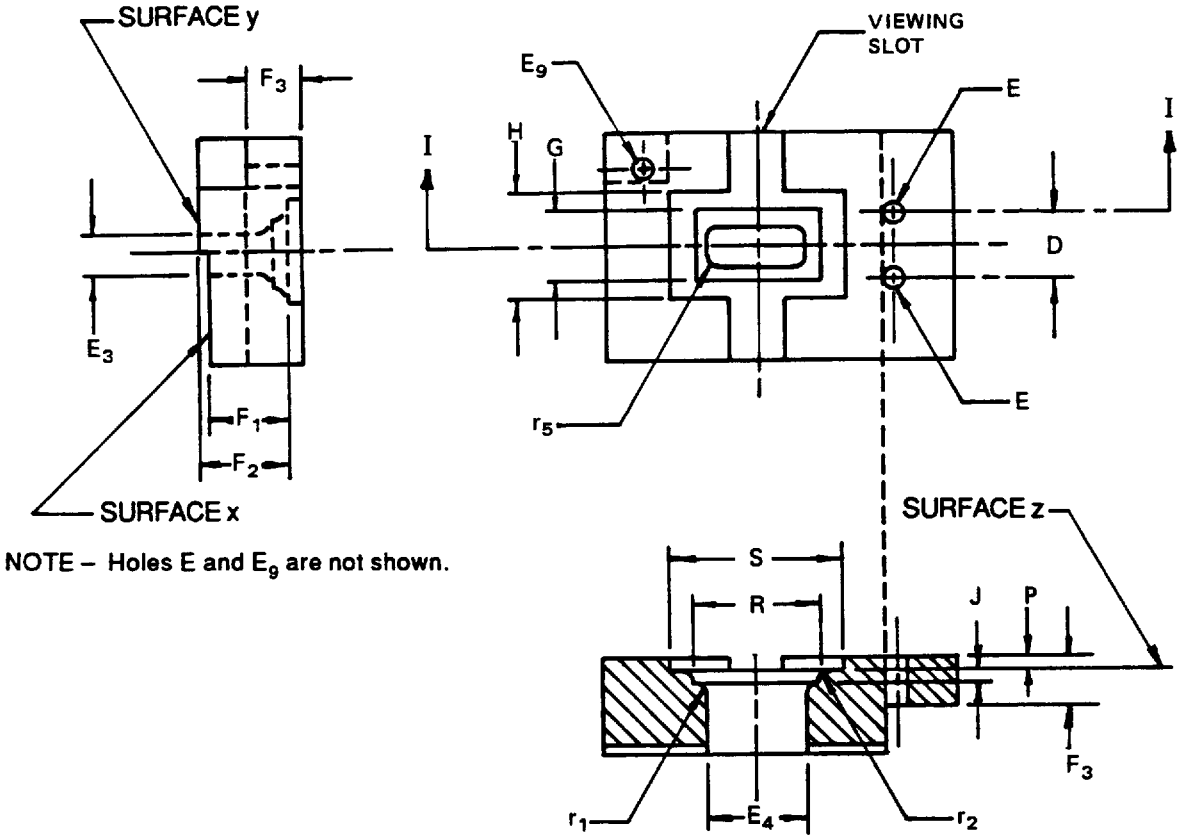

NOTE – Holes E and E_9 are not shown.

Section I-I

Copyright National Electrical Manufacturers Association
Provided by IHS under license with NEMA
No reproduction or networking permitted without license from IHS
Not for Resale

Reference	Dimension in	Tolerance in	Nearest metric equivalent mm
D	0.210	±0.001	5.33
E (Notes 1, 2)	0.073	+0.001	1.85
E_3 (Note 3)	0.153	+0.001	3.89
E_4 (Note 3)	0.363	+0.001	9.22
E_9	0.063	+0.001	1.60
F_1	0.205	−0.001	5.21
F_2	0.265	+0.001	6.73
F_3	0.155	−0.001	3.94
G	0.295	+0.001	7.49
H	0.415	+0.001	10.54
J	0.030	+0.001	0.76
P	0.030	±0.001	0.76
R	0.515	+0.001	13.08
S	0.660	+0.001	16.76
r_1	0.020	+0.001	0.51
r_2	0.015	+0.001	0.38
r_5	0.028	−0.001	0.71

NOTES

1 An allowance of ±0.010 in (±0.25 mm) is included on the common centerline of the pins to accommodate pin spacing and misalignment tolerances.

2 This dimension includes allowances for a maximum diameter pin and a total lateral misalignment of 0.010 in (0.25 mm).

3 In addition to the allowances in Notes 1 and 2, an allowance of 0.040 in (1.02 mm) in any direction is included to make accommodations for paired pin displacement with respect to the centers of dimensions G and R.

4 Enlarged pin volume along length W is partially controlled by radius r_1.

Purpose
To check maximum pin diameter, pin alignment, pin penetration and spacing, maximum and minimum pin length, and the maximums of dimensions G, H, J, R, and S.

Copyright National Electrical Manufacturers Association
Provided by IHS under license with NEMA
No reproduction or networking permitted without license from IHS
Not for Resale

For details of GX5.3 bases, see ANSI C81.61, Standard Sheet 1-321.

Testing

a) Insert the individual pins into hole E_9.

b) Insert the pair of pins in the holes labeled E.

c) Insert the pins into the E_3 – E_4 slot.

Copyright National Electrical Manufacturers Association
Provided by IHS under license with NEMA
No reproduction or networking permitted without license from IHS
Not for Resale

"Not-Go" Gauges for GX5.3- and GY5.3-Based Lamps

The drawing is intended only to illustrate essential dimensions of the gauge.

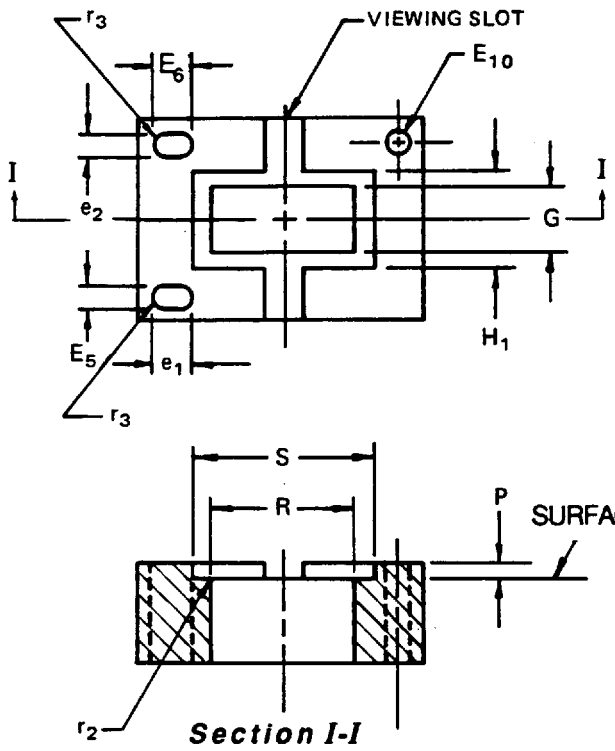

Figure 1 – "H Not-go" gauge

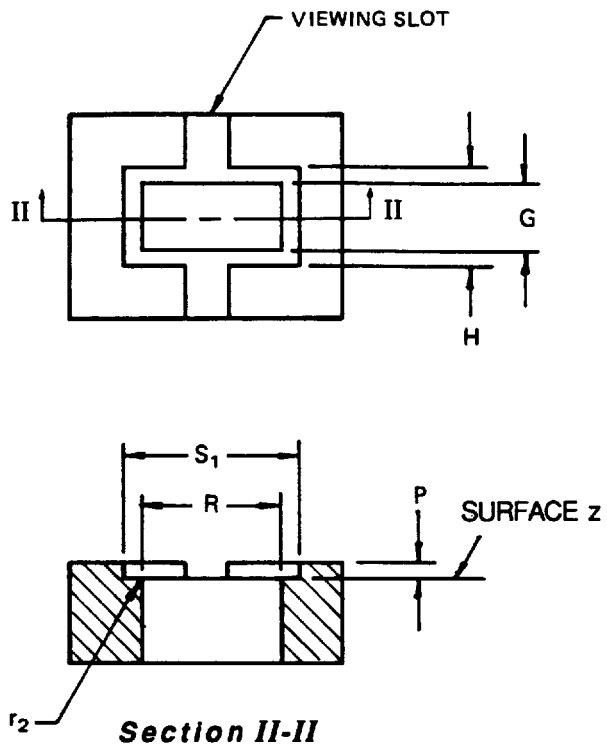

Figure 2 – "S Not-go" gauge

Copyright National Electrical Manufacturers Association
Provided by IHS under license with NEMA
No reproduction or networking permitted without license from IHS
Not for Resale

ANSI C81.63-1991
Std Sheet 3-323-1

Reference	Dimension in	Tolerance in	Nearest metric equivalent mm
E_5	0.023	–0.001	0.58
E_6	0.070	–0.001	1.78
E_{10}	0.057	–0.001	1.45
G	0.295	+0.001	7.49
H	0.415	+0.001	10.54
H_1	0.355	–0.001	9.02
P	0.030	+0.001	0.76
R	0.515	+0.001	13.08
S	0.660	+0.001	16.76
S_1	0.600	–0.001	15.24
e_1	0.102	+0.010	2.6
e_2	0.043	+0.010	1.1
r_2	0.015	+0.001	0.38
r_3	0.012	–0.001	0.30

Purpose
To check the minimum round pin diameter and minimum flat pin dimensions of GX5.3- and GY5.3-based lamps. Also, to gauge minimums of dimensions H and S for assurance that sufficient area is provided for surface z.

For details of GX5.3 and GY5.3 bases, see ANSI C81.61, Standard Sheets 1-321 and 1-322, respectively.

Testing
After evaluation by one of the "Go" gauges (ANSI C81.63, Standard Sheet 3-321 or 3-322), the test base is to be checked under the appropriate following procedure:

a) Test for GX5.3 bases:

1) Insert individual pins into the E_{10} hole.

2) Insert the pins into the viewing slot side of the "H Not-Go" gauge.

3) Insert the pins into the viewing slot side of the "S Not-Go" gauge.

b) Test for GY5.3 bases:

1) Insert individual flat pins in both the e_1–E_5 and the e_2– E_6 holes.

2) Insert a base in both the "H Not-Go" gauge and the "S Not-Go" gauge.

3) Insert the pins into the viewing slot side of the "H Not-Go" gauge.

4) Insert the pins into the viewing slot side of the "S Not-Go" gauge.

Copyright National Electrical Manufacturers Association
Provided by IHS under license with NEMA
No reproduction or networking permitted without license from IHS
Not for Resale

"Go" Gauge for GX5.3 Lampholders

ANSI C81.63-1991
Std Sheet 3-327-1

The drawing is intended only to illustrate essential dimensions of the gauge.

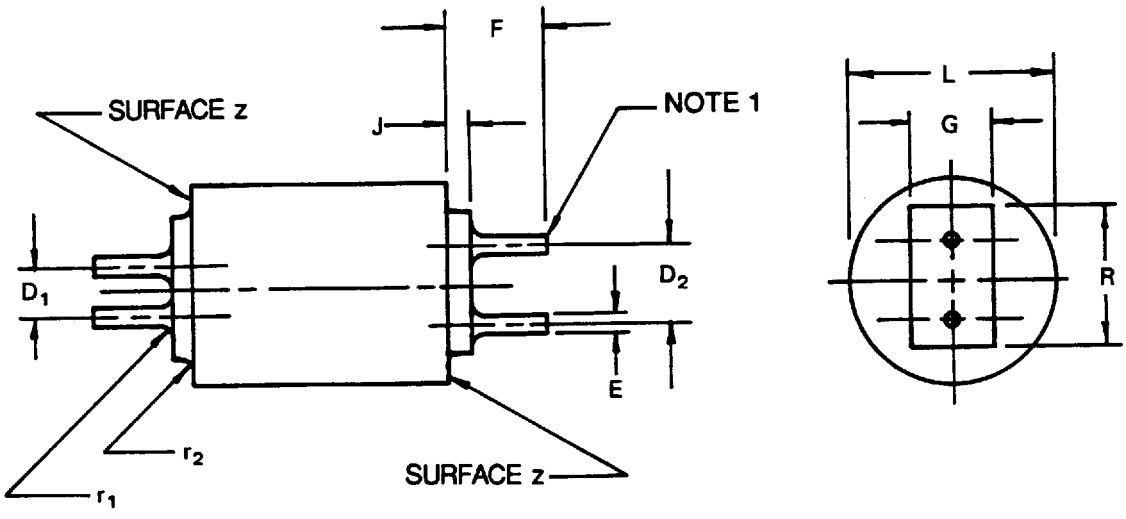

Copyright National Electrical Manufacturers Association
Provided by IHS under license with NEMA
No reproduction or networking permitted without license from IHS
Not for Resale

Reference	Dimension in	Tolerance in	Nearest metric equivalent mm
D_1	0.200	+0.001	5.08
D_2	0.220	−0.001	5.59
E (Note 2)	0.065	−0.001	1.65
F (Note 2)	0.267	−0.001	6.78
G	0.297	−0.001	7.54
J	0.032	−0.001	0.81
L	0.984	±0.010	25.0
R	0.517	−0.001	13.13
r_1	0.020	−0.001	0.51
r_2	0.017	−0.001	0.43

NOTES

1 Slight chamfer or radius required on ends of pins.

2 Dimensions E and F are the diameter and length of all pins on the gauge.

3 The gauge has allowances for critical pin diameter and paired-pin spacing only.

Purpose

To check various styles of GX5.3 lampholders for proper acceptance of lamp bases.

For details of GX5.3 lampholders, see ANSI C81.62, Standard Sheet 2-321.

Testing

Insert each end of this gauge into the contact assembly and check to see if surface z seats on the face of the holder. For those holders designed for slide-in type insertion of a lamp, the gauge shall be inserted in a similar manner.

Copyright National Electrical Manufacturers Association
Provided by IHS under license with NEMA
No reproduction or networking permitted without license from IHS
Not for Resale

Dual-Pin Retention Gauges for GX5.3 Lampholders and Connectors

The drawing is intended only to illustrate essential dimensions of the gauge.

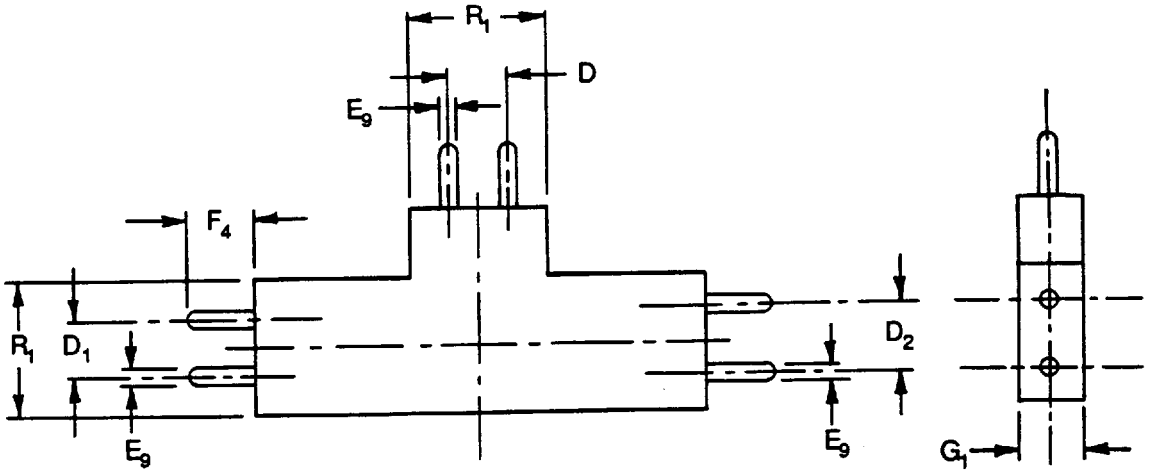

Reference	Dimension in	Tolerance in	Nearest metric equivalent mm
D	0.210	±0.001	5.33
D_1	0.192	+0.001	4.88
D_2	0.228	−0.001	5.78
E_9 (Note 1)	0.057	−0.001	1.45
F_4 (Note 1)	0.236	±0.002	6.0
G_1	0.236	+0.004	6.0
R_1	0.472	+0.004	12.0

NOTES

1 Dimensions E_9 and F_4 are the diameter and length of all pins on the gauge.

2 Pin ends shall be hemispherical in shape.

3 Pins shall be made of hardened steel.

4 Due to the secondary nature of the fit of bases to connectors and contact assemblies, holder gauge dimensions are not necessarily related precisely to the base gauge dimension.

Copyright National Electrical Manufacturers Association
Provided by IHS under license with NEMA
No reproduction or networking permitted without license from IHS
Not for Resale

Purpose
To check retention forces of a GX5.3 lampholder or connector.

For details of GX5.3 lampholders and connectors, see ANSI C81.62, Standard Sheet 2-321.

Testing
Each end of the gauge shall be used in each lampholder under test.

Maintain the gauge in a position perpendicular to the lampholder face throughout the various tests.

A calibrated force gauge is required as test equipment.

a) For connector designs:

1) Place the pin in the holes of the connector and push in, using a force gauge in an axial direction;

2) Pull the gauge out of the connector, applying force in an axial direction with an appropriate force gauge.

b) For contact assembly designs:

1) Place the pins of the gauge in the lampholder groove(s) with the intended orientation;

2) Push the gauge into the groove(s) until it bottoms out, using the force gauge;

3) Push the gauge out of the groove(s) using the force gauge.

Copyright National Electrical Manufacturers Association
Provided by IHS under license with NEMA
No reproduction or networking permitted without license from IHS
Not for Resale

Single-Pin Retention Gauge for GX5.3 Lampholders and Connectors

The drawing is intended only to illustrate essential dimensions of the gauge.

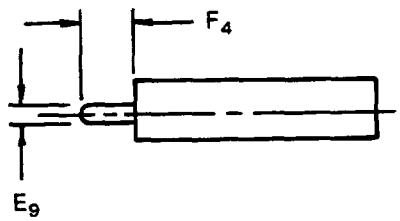

Reference	Dimension in	Tolerance in	Nearest metric equivalent mm
E_9	0.057	−0.001	1.45
F_4	0.175	−0.001	4.45

NOTES

1 Pin end shall be hemispherical in shape.

2 Pins shall be made of hardened steel.

Purpose

To check the retention force of GX5.3 lampholder contacts on a pin in any position.

For details of GX5.3 lampholders, see ANSI C81.62, Standard Sheet 2-231.

Testing

Insert the pin of the gauge into a lampholder hole or groove and push to the proper depth. Push or pull with a force gauge to remove the retention gauge.

Copyright National Electrical Manufacturers Association
Provided by IHS under license with NEMA
No reproduction or networking permitted without license from IHS
Not for Resale

"Go" Gauge for GY5.3-Based Lamps

The drawing is intended only to illustrate essential dimensions of the gauge.

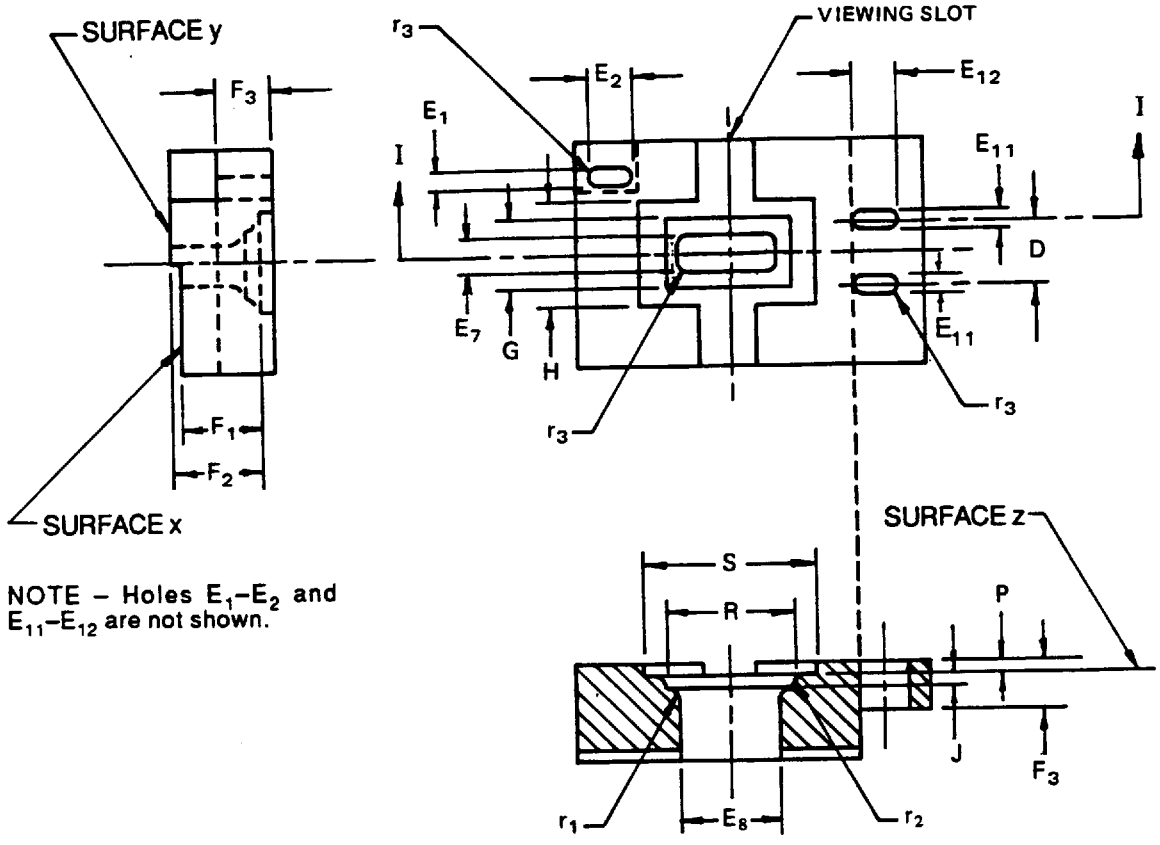

NOTE – Holes E_1–E_2 and E_{11}–E_{12} are not shown.

Section I-I

Copyright National Electrical Manufacturers Association
Provided by IHS under license with NEMA
No reproduction or networking permitted without license from IHS
Not for Resale

Reference	Dimension in	Tolerance in	Nearest metric equivalent mm
D	0.210	±0.001	5.33
E_1	0.031	+0.001	0.079
E_2	0.090	+0.001	2.29
E_7 (Note 1)	0.180	+0.001	4.57
E_8 (Note 1)	0.331	+0.001	8.41
E_{11} (Note 2)	0.041	+0.001	1.04
E_{12} (Note 3)	0.100	+0.001	2.54
F_1	0.205	−0.001	5.21
F_2	0.265	+0.001	6.73
F_3	0.155	−0.001	3.94
G	0.295	+0.001	7.49
H	0.415	+0.001	10.54
J	0.030	+0.001	0.76
P	0.030	±0.001	0.76
R	0.515	+0.001	13.08
S	0.660	+0.001	16.76
r_1	0.020	+0.001	0.51
r_2	0.015	+0.001	0.38
r_3	0.012	−0.001	0.030

NOTES

1 In addition to the allowances in Notes 2 and 3, an allowance of 0.040 in (1.02 mm) in any direction is included to make accommodations for paired pin displacement with respect to the centers of dimensions G and R.

2 An allowance of ±0.010 in (±0.25 mm) is included on the common centerline of the pins to accommodate pin spacing and misalignment tolerances.

3 This dimension includes allowances for maximum pin width and a total lateral misalignment of 0.010 in (0.25 mm).

4 Enlarged pin volume along length W is partially controlled by the radius r_1.

Copyright National Electrical Manufacturers Association
Provided by IHS under license with NEMA
No reproduction or networking permitted without license from IHS
Not for Resale

Purpose

To check maximum pin dimensions E_1 and E_2, pin alignment and spacing, maximum and minimum pin iength, and the maximums of dimensions G, H, J, R, and S.

For details of GY5.3 bases, see ANSI C81.61, Standard Sheet 1-322.

Testing

a) Insert the individual pins into the E_1–E_2 hole.

b) Insert the pair of pins into the holes of E_{11}–E_{12}.

c) Insert the pins into the E_7–E_8 slot.

Copyright National Electrical Manufacturers Association
Provided by IHS under license with NEMA
No reproduction or networking permitted without license from IHS
Not for Resale

"Go" Gauge for GY5.3 Lampholders and Connectors

The drawing is intended only to illustrate essential dimensions of the gauge.

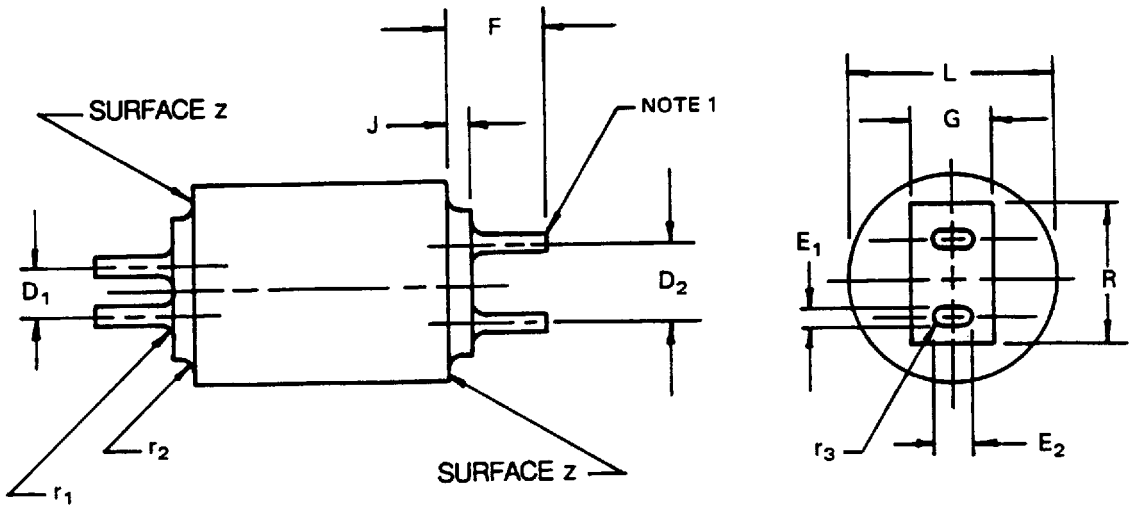

Reference	Dimension in	Tolerance in	Nearest metric equivalent mm
D_1	0.200	+0.001	5.08
D_2	0.220	−0.001	5.59
E_1	0.033	−0.001	0.84
E_2 (Note 2)	0.092	−0.001	2.34
F (Note 2)	0.267	−0.001	6.78
G	0.297	−0.001	7.54
J	0.032	−0.001	0.81
L	0.984	±0.010	25.0
R	0.517	−0.001	13.13
r_1	0.020	−0.001	0.51
r_2	0.017	−0.001	0.43
r_3	0.012	+0.001	0.30

NOTES

1 Slight chamfer or radius required on ends of pins.

2 Dimensions E_2 and F are the diameter and length of all pins on the gauge.

3 The gauge has allowances for critical pin diameter and paired pin spacing only.

Copyright National Electrical Manufacturers Association
Provided by IHS under license with NEMA
No reproduction or networking permitted without license from IHS
Not for Resale

ANSI C81.63-1991
Std Sheet 3-328-1

Purpose
To check various styles of GY5.3 lampholders for proper acceptance of lamp bases.

For details of GY5.3 lampholders, see ANSI C81.62, Standard Sheet 2-322.

Testing
Insert each end of this gauge into the holder to check the seating of surface z on the face of the holder. This applies to both connector and contact assembly types of holders. For those holders designed for slide-in type insertion of a lamp, the gauge shall be inserted in a similar manner.

Copyright National Electrical Manufacturers Association
Provided by IHS under license with NEMA
No reproduction or networking permitted without license from IHS
Not for Resale

Dual Pin Retention Gauges for GY5.3 Lampholders and Connectors

The drawing is intended only to illustrate essential dimensions of the gauge.

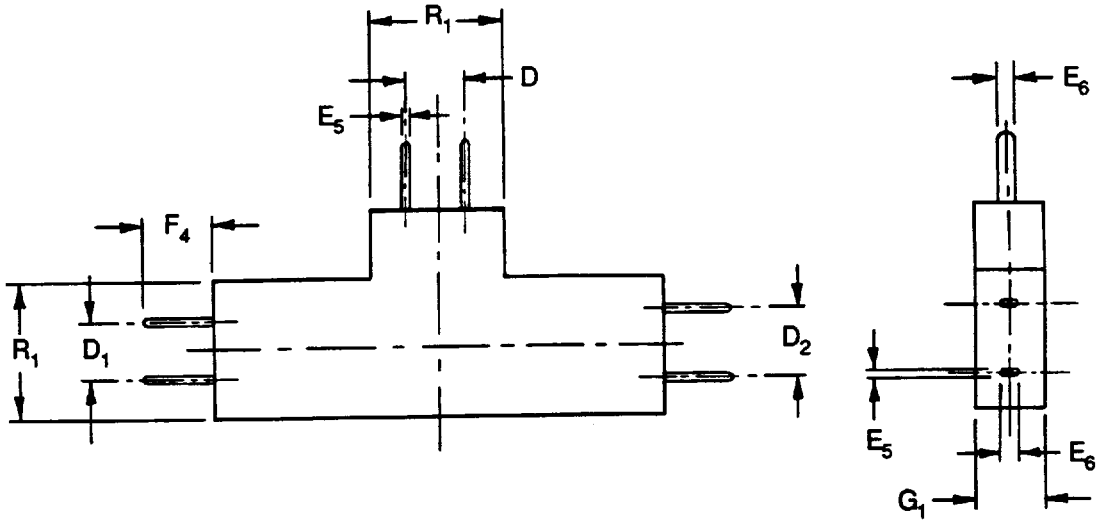

Reference	Dimension in	Tolerance in	Nearest metric equivalent mm
D	0.210	±0.001	5.33
D_1	0.200	+0.001	5.08
D_2	0.220	±0.001	5.59
E_5 (Note 1)	0.023	−0.001	0.58
E_6 (Note 1)	0.070	−0.001	1.78
F_4 (Note 1)	0.236	±0.002	6.0
G_1	0.236	+0.004	6.0
R_1	0.472	+0.004	12.0

NOTES

1 Dimensions E_5, E_6, and F_4 are the dimensions of all pins on the gauge.

2 Pin ends shall be rounded.

3 Pins shall be made of hardened steel.

4 Due to the secondary nature of the fit of bases to connectors and contact assemblies, holder gauge dimensions are not necessarily related precisely to the base gauge dimensions.

Copyright National Electrical Manufacturers Association
Provided by IHS under license with NEMA
No reproduction or networking permitted without license from IHS
Not for Resale

Purpose
To check retention forces of a simulated base in a lampholder.

For details of GY5.3 lampholders, see ANSI C81.62, Standard Sheet 2-322.

Testing
Each end of the gauge shall be used in each lampholder under test.

Maintain the gauge in a position perpendicular to the lampholder face throughout the various tests.

A calibrated force gauge is required as test equipment.

a) For connector designs:

1) Place the pin in the holes of the connector and push in, using a force gauge in an axial direction;

2) Pull the gauge out of the connector, applying force in an axial direction with an appropriate force gauge.

b) For contact assembly designs:

1) Place the pins of the gauge in the lampholder groove(s) with the intended orientation;

2) Push the gauge into the groove(s) until it bottoms out, using the force gauge;

3) Push the gauge out of the groove(s) using the force gauge.

Copyright National Electrical Manufacturers Association
Provided by IHS under license with NEMA
No reproduction or networking permitted without license from IHS
Not for Resale

Single-Pin Retention Gauge for GY5.3 Lampholders and Connectors

The drawing is intended only to illustrate essential dimensions of the gauge.

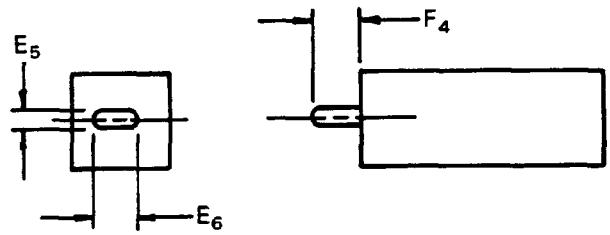

Reference	Dimension *in*	Tolerance *in*	Nearest metric equivalent *mm*
E_5	0.023	−0.001	0.58
E_6	0.070	−0.001	1.78
F_4	0.175	−0.001	4.45

NOTES

1 Pin end shall be rounded.

2 Pins shall be made of hardened steel.

Purpose

To check the retention force of a single pin at any location in the lampholder contacts.

For details of GY5.3 lampholders, see ANSI C81.62, Standard Sheet 2-322.

Testing

Insert the pin of the gauge into a hole or groove and push to the proper depth. Push or pull with a force gauge to remove the retention gauge.

Copyright National Electrical Manufacturers Association
Provided by IHS under license with NEMA
No reproduction or networking permitted without license from IHS Not for Resale

"Go" Gauges for G6.35- and GY6.35-Based Lamps

The drawing is intended only to illustrate essential dimensions of the gauge.

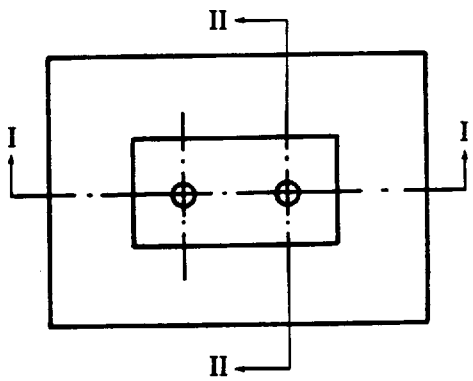

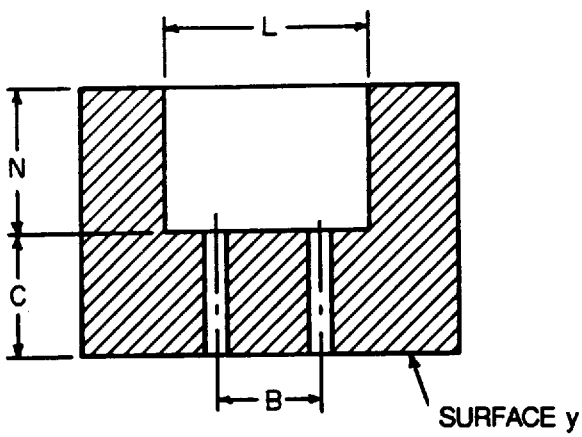

Section I-I

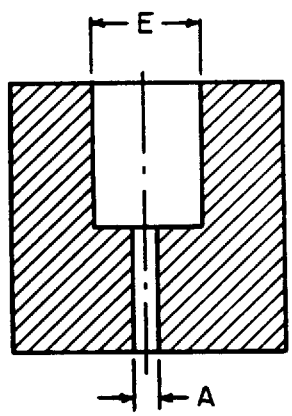

Section II-II

Copyright National Electrical Manufacturers Association
Provided by IHS under license with NEMA
No reproduction or networking permitted without license from IHS
Not for Resale

Reference	Dimensions in (Note 1)				Tolerance in	Metric equivalent mm			
	G6.35-15	G6.35-20	G6.35-25	G6.35-30		G6.35-15	G6.35-20	G6.35-25	G6.35-30
A (Note 2)	0.051	0.051	0.051	0.051	+0.0004	1.3	1.3	1.3	1.3
B	0.250	0.250	0.250	0.250	±0.0002	6.35	6.35	6.35	6.35
C	0.295	0.295	0.295	0.295	−0.001	7.5	7.5	7.5	7.5
E	0.295	0.295	0.354	0.354	+0.001	7.5	7.5	9.0	9.0
L	0.591	0.787	0.984	1.181	+0.001	15.0	20.0	25.0	30.0
N	0.374	0.374	0.512	0.591	−0.001	9.5	9.5	13.0	15.0

NOTES

1 The inch units of measurement were derived from the metric values. This accounts for the fact that converting from inches to metric equivalent does not necessarily round off as shown.

2 Dimensions for G6.35-based lamps and GY6.35-based lamps are the same except dimension A for GY6.35-based lamps has a value of 0.061 in (1.55 mm).

Purpose

To check maximum contour above the reference plane, the combined diameter and spacing of the pins, and the minimum length of the pins.

For details of G6.35 and GY6.35 bases, see ANSI C81.61, Standard Sheet 1-340.

Testing

Insert the base in the appropriate gauge and check to see if the pins are coplanar with surface y.

Copyright National Electrical Manufacturers Association
Provided by IHS under license with NEMA
No reproduction or networking permitted without license from IHS
Not for Resale

"Go" and "Not Go" Gauges for G6.35, GY6.35 and GZ6.35 Pin Diameter

The drawing is intended only to show the dimensions to be controlled.

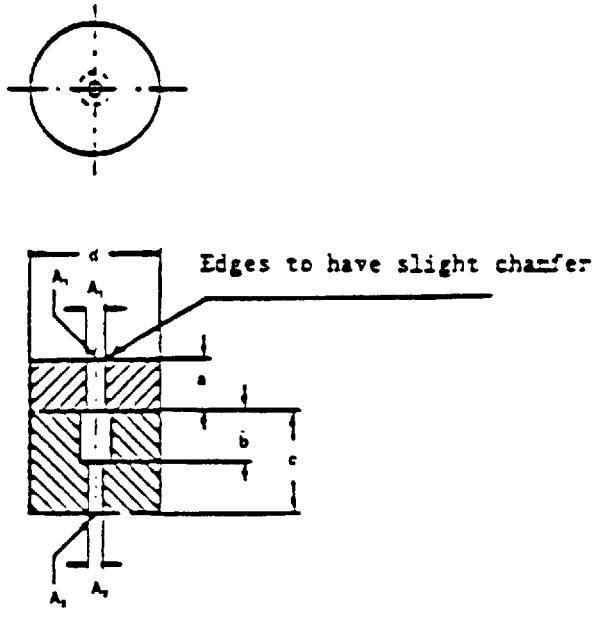

Reference	Dimensions (millimeters) G6.35 and GZ6.35	GY6.35	Tolerance (millimeters)
A_1	1.05	1.3	+0.01
A_2	0.95	1.2	-0.01
a	4.00	4.0	±0.5
b	4.00	4.0	±0.5
c	8.00	8.0	±0.5
d	10.00	10.0	-0.5

Purpose
To check the dimension A_{max} and A_{min} of G6.35, GY6.35, and GZ6.35 lamp bases.

For details of G6.35 and GY6.35 bases, see ANSI C81.61-1991, Standard Sheet 1-340, and for GZ6.35 bases, see ANSI C81.61-1991, Standard Sheet 1-341.

Testing
Attempt to insert each individual pin into gauge holes a_1 and a_2.

Copyright National Electrical Manufacturers Association
Provided by IHS under license with NEMA
No reproduction or networking permitted without license from IHS
Not for Resale

"Go" Gauge for G6.35 and GY6.35 Lampholders

The drawing is intended only to illustrate essential dimensions of the gauge.

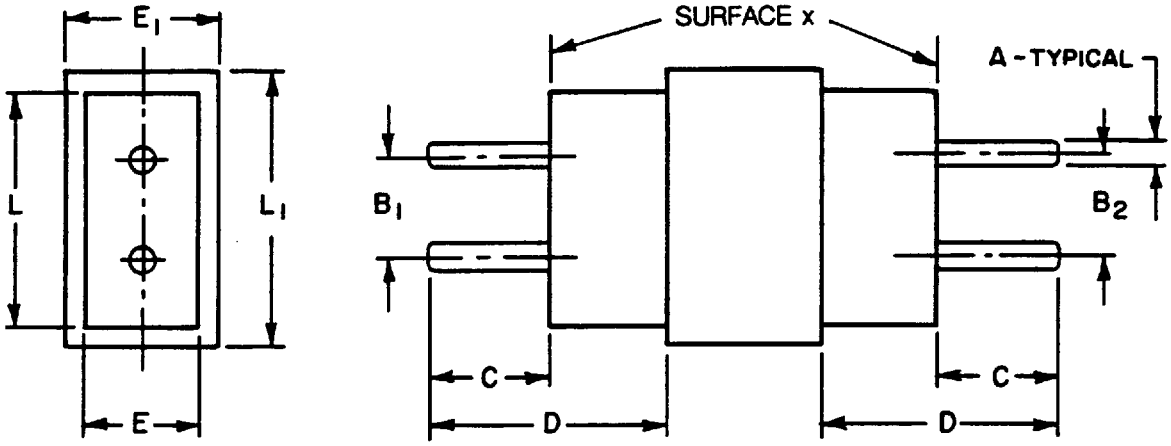

Reference	Dimension in	Tolerance in	Nearest metric equivalent mm
A (Note 1)	0.042	−0.0004	1.07
B_1	0.260	+0.0004	6.60
B_2	0.240	−0.0004	6.10
C	0.293	+0.001	7.44
D	0.665	+0.001	16.89
E	0.297	−0.001	7.54
E_1	0.400	±0.010	10.16
L (Note 2)	0.593	−0.001	15.06
L_1	0.700	±0.010	17.78

NOTES

1 Dimensions A for GY6.35 shall be 0.052 in (1.32 mm).

2 Gauges for lampholders with L dimensions other than 0.593 in (15.06 mm) are shown in IEC Publication 61-3, *Lamp caps and holders together with gauges for the control of interchangeability and safety, Part 3: Gauges.*

Copyright National Electrical Manufacturers Association
Provided by IHS under license with NEMA
No reproduction or networking permitted without license from IHS
Not for Resale

ANSI C81.63-1991
Std Sheet 3-345-1

Purpose

To check G6.35 and GY6.35 lampholders with regard to fit of lamp bases.

For details of G6.35 and GY6.35 lampholders, see ANSI C81.62, Standard Sheet 2-340.

Testing

Insert each end of the appropriate "Go" gauge in turn until the pins come to a stop.

After this test, it shall be verified that the contacts of the lampholder satisfy the requirements of the gauge for minimum contact force.

--`,,`,,`-`-`,,`,,`,`,,`---

Copyright National Electrical Manufacturers Association
Provided by IHS under license with NEMA
No reproduction or networking permitted without license from IHS

Not for Resale

Minimum Retention Force Gauge for Contacts of G6.35 and GY6.35 Lampholders

The drawing is intended only to illustrate essential dimensions of the gauge.

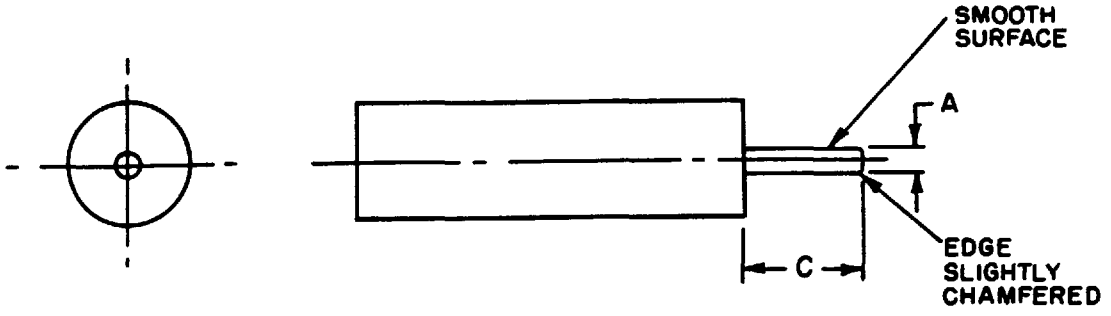

Reference	G6.35			GY6.35		
	Dimension in	Tolerance in	Nearest metric equivalent mm	Dimension in	Tolerance in	Nearest metric equivalent mm
A	0.0365	–0.0004	0.93	0.0465	–0.0004	1.18
C	0.293	+0.001	7.44	0.293	+0.001	7.44

Base	Mass lb	Tolerance lb	Nearest metric equivalent g
G6.35	0.5	+0.05	227
GY6.35	0.5	+0.05	277

Purpose
To check the minimum retention force of the contacts.

For details of G6.35 and GY6.35 lampholders, see ANSI C81.62, Standard Sheet 2-340.

Testing
After first checking the lampholder for acceptance of "Go" gauge 3-345, this gauge shall be fully inserted into each of the lampholder contacts. With the lampholder held "gauge down," check to see if the gauge falls out by its own weight.

Copyright National Electrical Manufacturers Association
Provided by IHS under license with NEMA
No reproduction or networking permitted without license from IHS
Not for Resale

"Go" Gauge for GZ6.35 Lamp Base

ANSI C81.63a-1993
Std Sheet 3-342-1

The drawing is intended only to show the dimensions to be controlled.

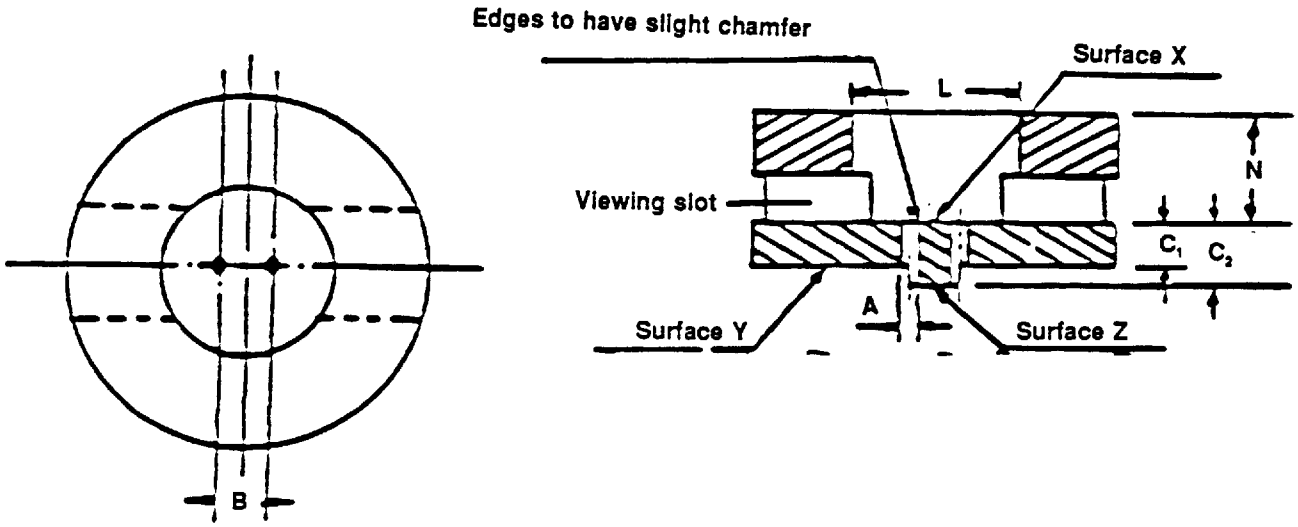

Reference	Dimensions (millimeters)	Tolerance (millimeters)
A	1.3	+0.01
B	6.35	±0.01
C_1	6.0	-0.02
C_2	8.5	+0.02
L	25.0	-0.02
N	10.0	+0.02

Purpose
To check GZ6.35 lamp bases with regard to fit in connectors.

For details of GZ6.35 bases, see ANSI C81.61-1991, Standard Sheet 1-341.

Testing
Attempt to insert the gauge so that the base is fully seated against gauge surface X. In this position, check the relationship of the pin ends to gauge surfaces Y and Z.

Copyright National Electrical Manufacturers Association
Provided by IHS under license with NEMA
No reproduction or networking permitted without license from IHS
Not for Resale

"Go" Gauge for GZ6.35 Connector

ANSI C81.63a-1993
Std Sheet 3-346-1
Page 1

The drawing is intended only to show the dimensions to be controlled.

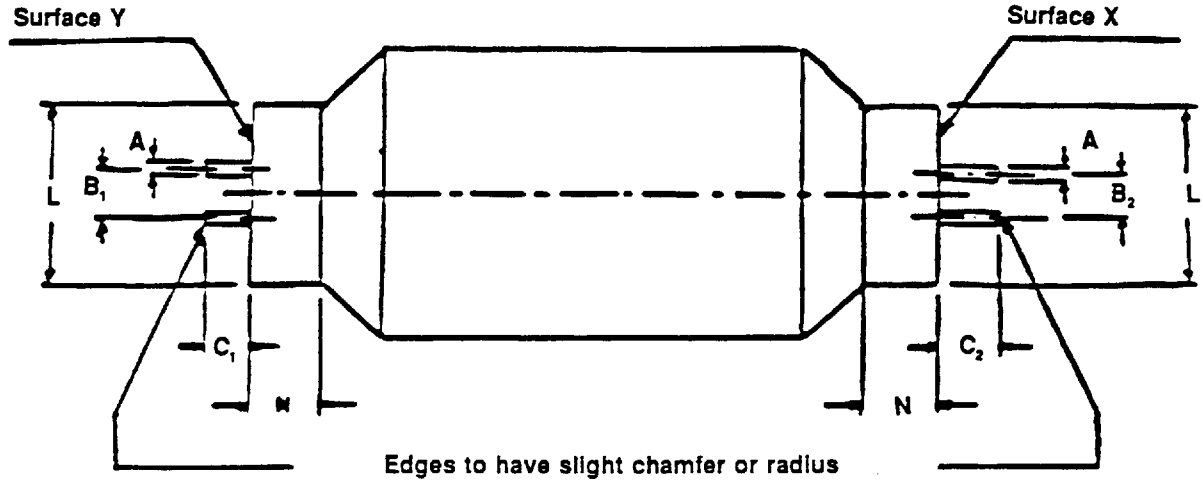

Reference	Dimensions (millimeters)	Tolerance (millimeters)
A	1.07	-0.01
B_1	6.63	-0.02
B_2	6.07	+0.02
C_1	6.0	-0.02
C_2	8.5	-0.02
L	25.0	+0.02
N	10.0	-0.02

Purpose
To check GZ6.35 connectors with regard to fit of lamp bases.

For details of GZ6.35 connectors, see ANSI C81.62-1991, Standard Sheet 2-342.

Testing
Attempt to insert each end of the gauge, in turn, into the connector, and check the relationship of the appropriate gauge surfaces X and Y to the corresponding surface of the connector.

Copyright National Electrical Manufacturers Association
Provided by IHS under license with NEMA
No reproduction or networking permitted without license from IHS
Not for Resale

Minimum Contact Retention Force Gauge for GZ4 and GZ6.35 Connectors

ANSI C81.63a-1993
Std Sheet 3-350-1

The drawing is intended only to show the dimensions to be controlled.

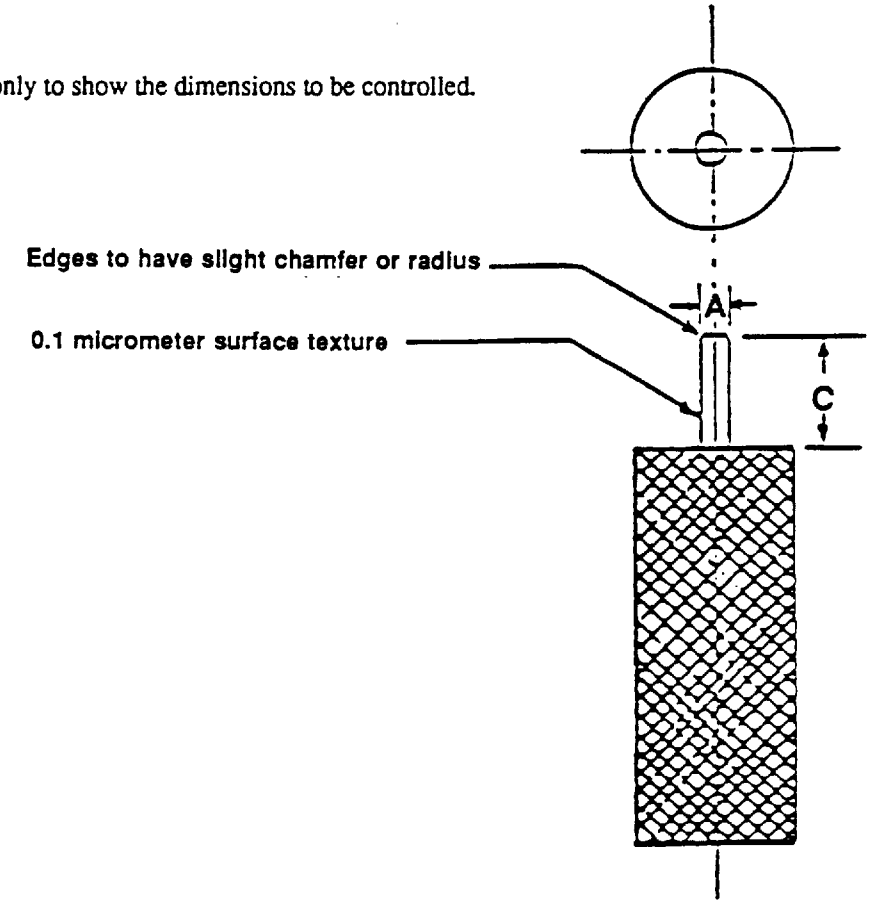

Reference	Dimensions (millimeters)	Tolerance (millimeters)
A	0.94	+0.005
C	6.00	+0.2
Mass	0.05 kg	-0.005 kg

Purpose
To check the minimum contact retention force of contacts in GZ6.35 connectors.

For details of GZ6.35 connectors, see ANSI C81.63-1991, Standard Sheet 2-342.

Testing
Insert the gauge into each contact of the connector with the connector in an inverted position, and check whether or not the gauge falls out.

Copyright National Electrical Manufacturers Association
Provided by IHS under license with NEMA
No reproduction or networking permitted without license from IHS
Not for Resale

SINGLE-PIN GAUGE "D" FOR CHECKING MAXIMUM WITHDRAWAL FORCE OF CONTACTS IN LAMPHOLDERS
CALIBRE A BROCHE SIMPLE "D" POUR LA VERIFICATION DE LA FORCE MAXIMALE D'EXTRACTION DANS LES DOUILLES
2G(X)7, 2G10, 2G11, G(X)23, G(X)(Y)24, G(X)(Y)32

Dimensions in millimetres - Dimensions en millimètres

The drawing is intended only to illustrate the essential dimensions of the gauge.
Le dessin a pour seul but d'illustrer les dimensions essentielles du calibre.

For details of holders 2G7, 2GX7, 2G10, 2G11, G23, GX23, G24, GX24, GY24, G32, GX32 and GY32, see sheets 7005-102, 7005-103, 7005-118, 7005-82, 7005-69, 7005-86, 7005-78 and 7005-87 respectively.
Pour les détails des douilles 2G7, 2GX7, 2G10, 2G11, G23, GX23, G24, GX24, GY24, G32, GX32 and GY32, voir feuilles 7005-102, 7005-103, 7005-118, 7005-82, 7005-69, 7005-86, 7005-78 et 7005-87 respectivement.

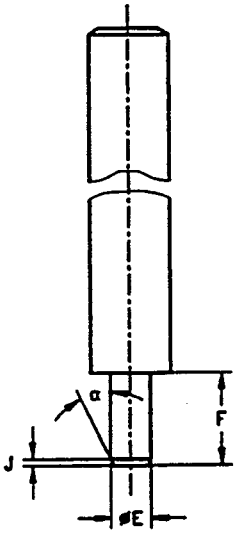

PURPOSE: To check the maximum force related to withdrawal of cap-pins with maximum dimensions from the individual contacts of lampholders 2G7, 2GX7, 2G10, 2G11, G23, GX23, G24d-.., G24q-.., GX24d-.., GX24q-.., GY24d-.., G32d-.., G32q-.., GX32d-.. and GX32q-..

TESTING: After the gauge has been fully inserted into one of the lampholder contacts, the force required to withdraw it shall not exceed the value specified for this gauge on sheets 7005-102, 7005-103, 7005-118, 7005-82, 7005-69, 7005-86, 7005-78 and 7005-87.
The test shall be repeated on the other contact(s).

BUT: Vérification de la force maximale d'extraction des broches aux dimensions maximales des contacts individuels des douilles 2G7, 2GX7, 2G10, 2G11, G23, GX23, G24d-.., G24q-.., GX24d-.., GX24q-.., GY24d-.., G32d-.., G32q-.., GX32d-.. et GX32q-..

ESSAI: Après insertion totale du calibre dans l'un des contacts de la douille, la force nécessaire à son extraction ne doit pas excéder la valeur spécifiée pour ce calibre dans les feuilles 7005-102, 7005-103, 7005-118, 7005-82, 7005-69, 7005-86, 7005-78 et 7005-87.
L'essai doit être répété avec le ou les autres contacts.

Reference	Dimension	Tolerance
E	2,67	+ 0,01 - 0,0
F	6,8	+ 0,01 - 0,0
J	0,4	+ 0,05 - 0,05
α	30°	+ 1° - 1°

For checking lampholders GY32d-.., see relevant note on lampholder sheet.
Pour la vérification des douilles GY32d-.., voir la note correspondante sur la feuille de la douille.

Surface finish 0,4 μm over length F
Finition 0,4 μm sur longueur F

Copyright National Electrical Manufacturers Association
Provided by IHS under license with NEMA
No reproduction or networking permitted without license from IHS
Not for Resale

SINGLE-PIN GAUGE "E" FOR CHECKING MINIMUM RETENTION FORCE OF CONTACTS IN LAMPHOLDERS
CALIBRE A BROCHE SIMPLE "E" POUR LA VERIFICATION DE LA FORCE MINIMALE DE RETENUE DANS LES DOUILLES
2G(X)7, 2G10, 2G11, G(X)23, G(X)(Y)24, G(X)(Y)32

Dimensions in millimetres - Dimensions en millimètres

The drawing is intended only to illustrate the essential dimensions of the gauge.
Le dessin a pour seul but d'illustrer les dimensions essentielles du calibre.

For details of holders 2G7, 2GX7, 2G10, 2G11, G23, GX23, G24, GX24, GY24, G32, GX32 and GY32, see sheets 7005-102, 7005-103, 7005-118, 7005-82, 7005-69, 7005-86, 7005-78 and 7005-87 respectively.
Pour les détails des douilles 2G7, 2GX7, 2G10, 2G11, G23, GX23, G24, GX24, GY24, G32, GX32 and GY32, voir feuilles 7005-102, 7005-103, 7005-118, 7005-82, 7005-69, 7005-86, 7005-78 et 7005-87 respectivement.

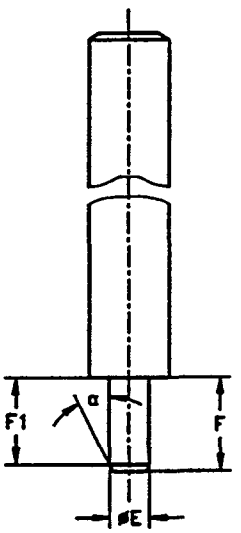

PURPOSE: To check the minimum retention force related to minimum cap-pin dimensions in the individual contacts of lampholders 2G7, 2GX7, 2G10, 2G11, G23, GX23, G24d-.., G24q-.., GX24d-.., GX24q-.., GY24d-.., G32d-.., G32q-.., GX32d and GX32q-...

TESTING: After the gauge has been fully inserted into one of the lampholder contacts, the force required to withdraw it shall be not less than the value specified for this gauge on sheets 7005-102, 7005-103, 7005-118, 7005-82, 7005-69, 7005-86, 7005-78 and 7005-87.
The test shall be repeated on the other contact(s).

BUT: Vérification de la force minimale de retenue des broches relative à des contacts individuels de dimensions minimales des douilles 2G7, 2GX7, 2G10, 2G11, G23, GX23, G24d-.., G24q-.., GX24d-.., GX24q-.., GY24d-.., G32d-.., G32q-.., GX32d-.. et GX32q-...

ESSAI: Après insertion totale du calibre dans l'un des contacts de la douille, la force nécessaire à son extraction ne doit pas être inférieure à la valeur spécifiée pour ce calibre dans les feuilles 7005-102, 7005-103, 7005-118, 7005-82, 7005-69, 7005-86, 7005-78 et 7005-87.
L'essai doit être répété avec le ou les autres contacts.

Reference	Dimension	Tolerance
E	2,29	+ 0,0 - 0,01
F	6,0	+ 0,0 - 0,02
F1	5,5	+ 0,0 - 0,05
α	30°	+ 1° - 1°

For checking lampholders GY32d-.., see relevant note on lampholder sheet.
Pour la vérification des douilles GY32d-.., voir la note correspondante sur la feuille de la douille.

Surface finish 0,4 μm over length F
Finition 0,4 μm sur longueur F

Copyright National Electrical Manufacturers Association
Provided by IHS under license with NEMA
No reproduction or networking permitted without license from IHS
Not for Resale

"GO" AND "NOT GO" GAUGE FOR BI-PIN LAMP BASES

CALIBRE "ENTRE" ET "N'ENTRE PAS" POUR SOCLES DE LAMPES A DEUX BROCHES GU7

Dimensions in millimetres - Dimensions en millimètres

The drawing is intended only to illustrate the dimensions essential for interchangeability.
Le dessin a pour seul but d'illustrer les dimensions essentielles pour l'interchangeabilité.

For details of base GU7, see sheet 7004-113.
Pour les détails du socle GU7, voir feuille 7004-113.

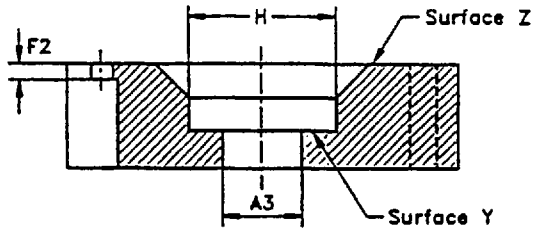

Section X–X
Coupe X–X

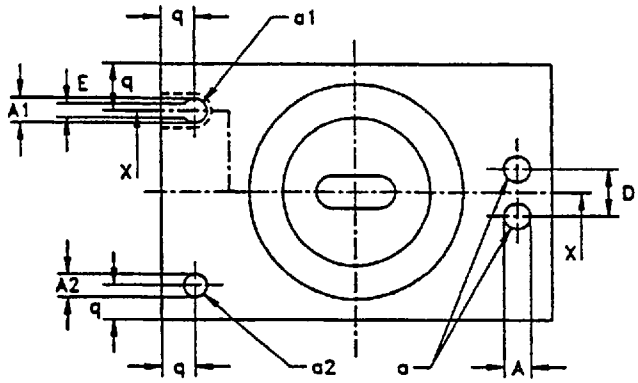

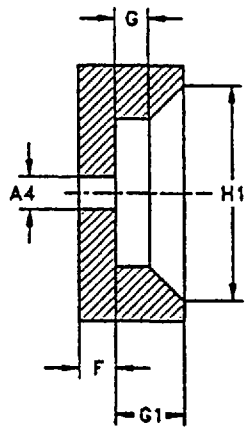

Reference	Dimension	Tolerance
A (1)	3,85	+ 0,02 - 0,0
A1	3,6	+ 0,02 - 0,0
A2	3,4	+ 0,0 - 0,02
A3	10,85	+ 0,02 - 0,0
A4	3,6	+ 0,02 - 0,0
D	7,0	+ 0,025 - 0,025
E	2,1	+ 0,02 - 0,0
F	5,4	+ 0,02 - 0,0
F2	2,4	+ 0,0 - 0,02
G	6,0	+ 0,02 - 0,0
G1	12,0	+ 0,02 - 0,0
H	20,0	+ 0,0 - 0,02
H1	32,0	+ 0,02 - 0,0
q	4,95	Max.

(1) An allowance of 0,25 mm is included to accomodate pin spacing and alignment errors.

(1) Un espace de 0,25 mm est prévu pour tenir compte des erreurs d'écartement et des erreurs d'alignement des broches.

Copyright National Electrical Manufacturers Association
Provided by IHS under license with NEMA
No reproduction or networking permitted without license from IHS
Not for Resale

"GO" AND "NOT GO" GAUGE FOR BI-PIN LAMP BASES

CALIBRE "ENTRE" ET "N'ENTRE PAS" POUR SOCLES DE LAMPES A DEUX BROCHES

GU7

Dimensions in millimetres - Dimensions en millimètres

PURPOSE: To check the base GU7 in the following respects:
- the diameter of the individual pins (dimension A);
- the combined displacement and diameter of the pins (dimensions A and D);
- the length of the pins (dimensions F1 plus J);
- the recess length and diameter of the pins (dimensions F2 and E).

TESTING: It shall be possible to insert the individual pins of the base from surface Z into the hole "a1" and remove the pin along the slot.
It shall not be possible to insert the pins of the base into hole "a2".
It shall be possible to insert both pins of the base simultaneously into holes "a" until the reference plane of the base is in contact with surface Z of the gauge.
It shall be possible to insert the base into the gauge until the reference plane of the base is in contact with surface Y of the gauge. In this position the ends of the pins shall be co-planar with or project beyond the surface of the gauge.

BUT: Vérification du socle GU7 concernant:
- le diamètre de chacune des broches (dimension A);
- le déplacement combiné des broches et leur diamètre (dimensions A et D);
- la longueur des broches (dimensions F1 plus J);
- la longueur et le diamètre de l'évidement des broches (dimensions F2 et E).

ESSAI: Il doit être possible d'insérer chaque broche du socle à travers la surface Z dans le trou "a1" et d'extraire la broche le long de la fente.
Il ne doit pas être possible d'insérer les broches du socle dans le trou "a2".
Il doit être possible d'insérer simultanément les deux broches du socle dans les trous "a" jusqu'à ce que le plan de référence du socle soit en contact avec la surface Z du calibre.
Il doit être possible d'insérer le socle dans le calibre jusqu'à ce que le plan de référence du socle soit en contact avec la surface Y du calibre. Dans cette position, les extrémités des broches doivent se trouver dans le même plan que celui de la surface du calibre, ou saillir au-delà de cette surface.

Copyright National Electrical Manufacturers Association
Provided by IHS under license with NEMA
No reproduction or networking permitted without license from IHS
Not for Resale

"GO" GAUGE AND GAUGE FOR CHECKING THE MAXIMUM INSERTION AND WITHDRAWAL TORQUES IN LAMPHOLDERS GU7

CALIBRE "ENTRE" ET CALIBRE POUR LA VERIFICATION DES TORSIONS MAXIMALES D'INSERTION ET D'EXTRACTION DANS LES DOUILLES GU7

Dimensions in millimetres - Dimensions en millimètres

The drawing is intended only to illustrate the dimensions essential for interchangeability.
Le dessin a pour seul but d'illustrer les dimensions essentielles pour l'interchangeabilité.

For details of holder GU7, see sheet 7005-113.
Pour les détails de la douille GU7, voir feuille 7005-113.

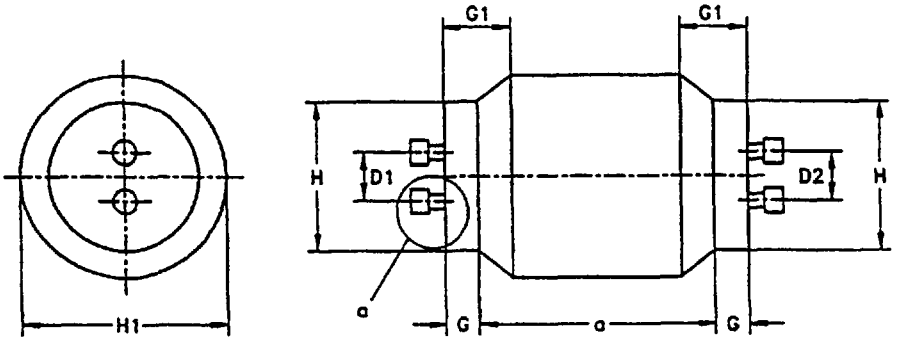

Detail a
Détail a

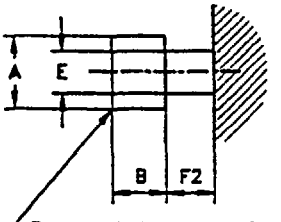

Scale 3:1
Echelle 3:1

Edges slightly chamfered, see sheet 7006-1
Arêtes légèrement chanfreinées, voir feuille 7006-1

Reference	Dimension	Tolerance
A	3,6	+ 0,02 - 0,0
B	2,7	+ 0,0 - 0,02
D1	7,25	+ 0,0 - 0,025
D2	6,75	+ 0,025 - 0,0
E	2,1	+ 0,02 - 0,0
F2	2,4	+ 0,0 - 0,02
G	6,0	+ 0,0 - 0,02
G1	12,0	+ 0,0 - 0,02
H	20,0	+ 0,0 - 0,02
H1	32,0	+ 0,0 - 0,02
a	25	+ 0,1 - 0,1

PURPOSE: To check the maximum insertion torque and the maximum withdrawal torque related to "maximum" lamp bases.
To check for proper acceptance of "maximum" GU7 lamp bases.

TESTING: It shall be possible to insert each end of the gauge in turn into the lampholder with a torque not exceeding .. Nm (u.c.) and to remove the gauge from the lampholder with a torque not exceeding .. Nm (u.c.).

BUT: Vérification du couple maximal d'insertion et du couple maximal d'extraction en rapport avec des socles de lampes de dimensions maximales.
Vérification de la réception correcte de socles de lampes GU7 de dimensions maximales.

ESSAI: Il doit être possible d'insérer tour à tour chaque extrémité du calibre dans la douille en utilisant un couple inférieur ou égale à ... Nm (à l'étude) et d'extraire le calibre de la douille en utilisant un couple inférieur ou égale à ... Nm (à l'étude).

Copyright National Electrical Manufacturers Association
Provided by IHS under license with NEMA
No reproduction or networking permitted without license from IHS
Not for Resale

"Go" Gauges for G7.9- and GX7.9-Based Lamps

Two separate gauges are required. The G7.9 and GX7.9 gauges differ with respect to the arrangement of the holes. The drawing shows the G7.9 version. The GX7.9 gauge has the large and small holes interchanged.

The drawing is intended only to illustrate essential dimensions of the gauge.

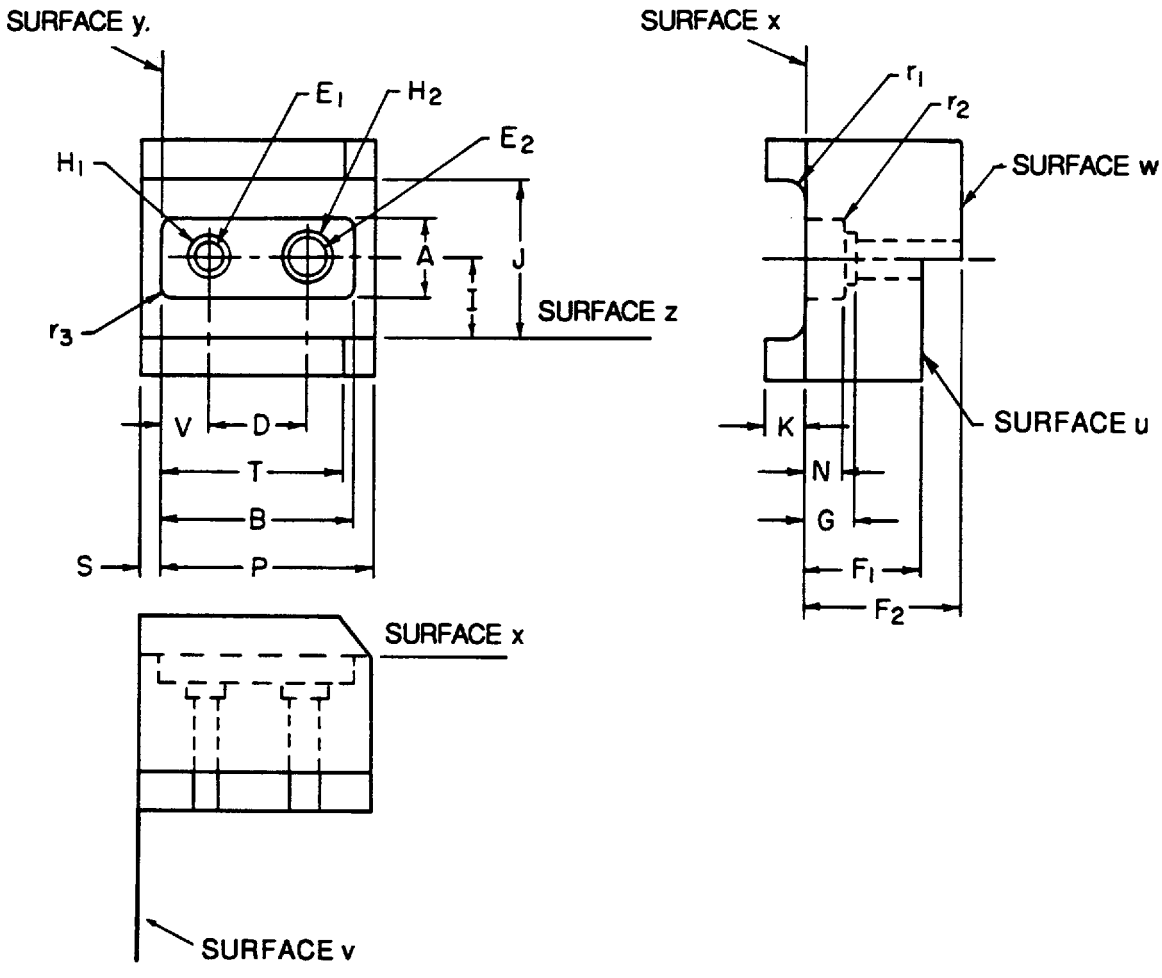

Copyright National Electrical Manufacturers Association
Provided by IHS under license with NEMA
No reproduction or networking permitted without license from IHS
Not for Resale

Reference	Dimension in	Tolerance in	Nearest metric equivalent mm
A	0.278	+0.001	7.06
B	0.622	+0.001	15.80
D	0.312	±0.001	7.92
E_1 (dia) (Note 1)	0.108	+0.001	2.74
E_2 (dia) (Note 1)	0.140	+0.001	3.56
F_1	0.526	–0.001	13.36
F_2	0.575	+0.001	14.61
G	0.167	+0.001	4.24
H_1 (dia) (Note 1)	0.145	+0.001	3.68
H_2 (dia) (Note 1)	0.190	+0.001	4.83
I (Note 2)	–	–	–
J	0.563	+0.001	14.30
K	0.152	–0.001	3.86
N	0.123	+0.001	3.12
P	0.708	–0.001	17.98
S	0.107	+0.001	2.72
T	0.600	+0.001	15.24
V	0.157	+0.001	3.99
r_1	0.046	–0.001	1.17
r_2	0.021	–0.001	0.53
r_3	0.057	–0.001	1.45

NOTES

1 The diameter of these holes is 0.010 in (0.25 mm) larger than the maximum pin, or pin boss, diameter, in order to allow for variations in pin spacing and alignment.

2 Dimension I = J/2.

Purpose

To check maximum dimensions of the base (dimensions A, B, E_1, E_2, G, H_1, H_2, J, K, N, S, V, and r_3) and maximum and minimum pin length.

For details of the G7.9 and GX7.9 bases, see ANSI C81.61, Standard Sheet 1-356.

Testing

The individual pin diameters are to be checked with an appropriate ring gauge.

Copyright National Electrical Manufacturers Association
Provided by IHS under license with NEMA
No reproduction or networking permitted without license from IHS
Not for Resale

Then, insert the base in the appropriate gauge and check for contact between reference plane X of the base and surface x of the gauge. If and when the base is fully seated, check the relation of the pin ends of both pins with surfaces u and w.

To check dimension S of the base, press the base so that its surface y is in contact with surface y of the gauge. Check to see if the base protrudes beyond surface s. Also, dimension r_3 is checked at this time.

Copyright National Electrical Manufacturers Association
Provided by IHS under license with NEMA
No reproduction or networking permitted without license from IHS
Not for Resale

"Go" Gauges for G7.9 and GX7.9 Lampholders

Two separate gauges are required. The G7.9 and GX7.9 gauges differ with respect to their pin arrangements. The drawing shows the G7.9 version. For the GX7.9, the large and small pins are interchanged.

The drawing is intended only to illustrate essential dimensions of the gauge.

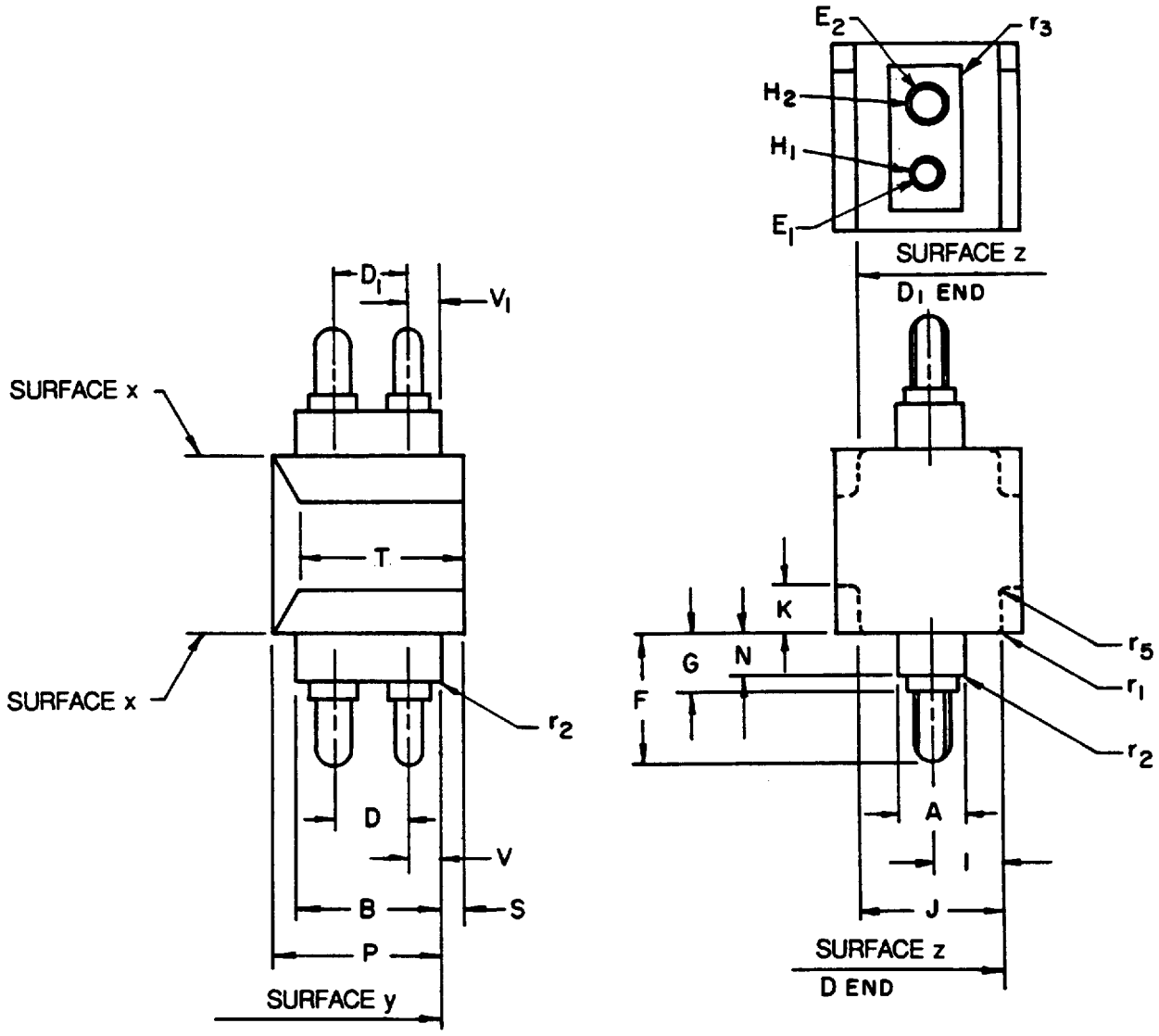

Copyright National Electrical Manufacturers Association
Provided by IHS under license with NEMA
No reproduction or networking permitted without license from IHS
Not for Resale

ANSI C81.63-1991
Std Sheet 3-359-1

Reference	Dimension in	Tolerance in	Nearest metric equivalent mm
A	0.284	−0.001	7.21
B	0.630	−0.001	16.00
D	0.301	+0.001	7.65
D_1	0.324	−0.001	8.23
E_1 (dia) (Note 1)	0.098	+0.001	2.49
E_2 (dia) (Note 1)	0.130	+0.001	3.30
F (Note 1)	0.577	−0.001	14.66
G	0.169	−0.001	4.29
H_1 (dia)	0.135	+0.001	3.43
H_2 (dia)	0.180	+0.001	4.57
I (Note 2)	–	–	–
J	0.565	−0.001	14.35
K	0.167	+0.001	4.24
N	0.125	−0.001	3.18
P	0.706	+0.001	17.93
S	0.104	+0.001	2.64
T	0.598	+0.001	15.19
V	0.159	−0.001	4.04
V_1	0.163	−0.001	4.14
r_1	0.044	+0.001	1.12
r_2	0.019	+0.001	0.48
r_3	0.055	+0.001	1.40
r_5	0.016	−0.001	0.41

NOTES

1 Dimensions E_1, E_2 and F apply at both ends of the gauge.

2 Dimension I = J/2.

Purpose

To check the lampholder with respect to the fit of a maximum lamp with maximum and minimum pin spacings.

For details of the G7.9 and GX7.9 lampholders, see ANSI C81.62, Standard Sheet 2-356.

Testing

Insert the maximum and minimum ends of the appropriate gauge into the lampholder and check for contact between surface x of the gauge and reference plane x of the lampholder.

Copyright National Electrical Manufacturers Association
Provided by IHS under license with NEMA
No reproduction or networking permitted without license from IHS
Not for Resale

Minimum Contact Retention Force Gauge for G7.9 and GX7.9 Lampholders

This drawing is intended only to illustrate the essential dimensions of the gauge.

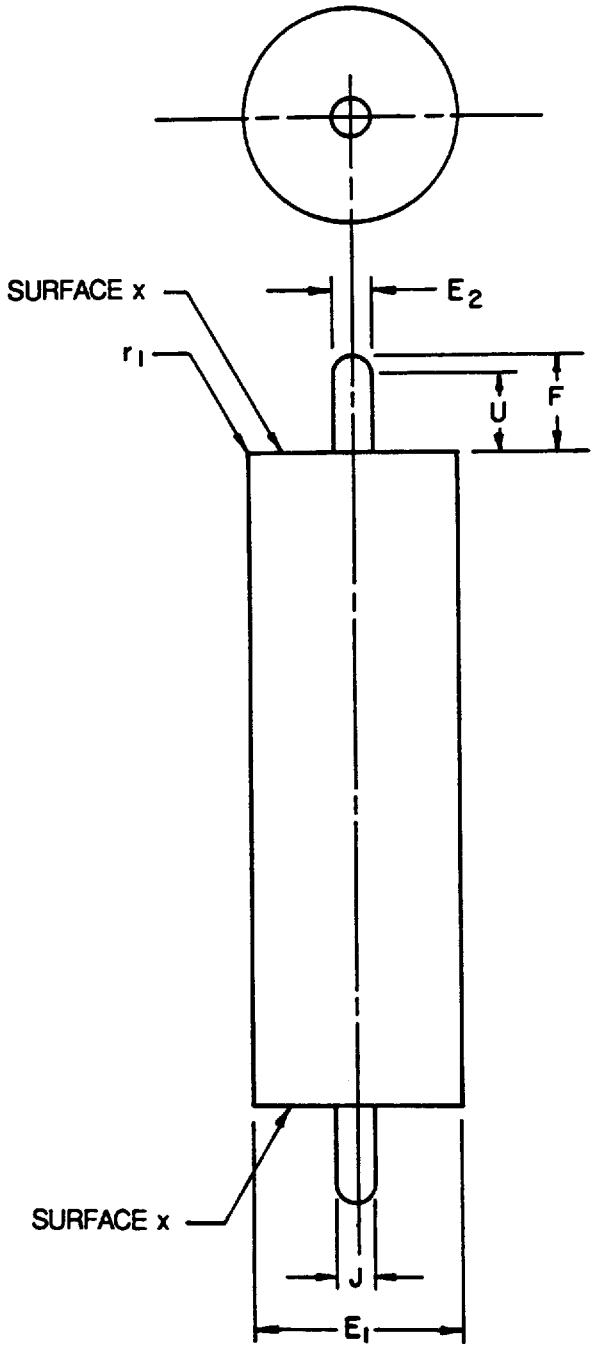

Copyright National Electrical Manufacturers Association
Provided by IHS under license with NEMA
No reproduction or networking permitted without license from IHS
Not for Resale

Reference	Dimension in	Tolerance in	Metric equivalent mm
E_1	0.091	–0.001	2.31
E_2	0.123	–0.001	3.12
F	0.524	+0.001	13.31
J	0.500	+0.001	12.70
U (Note)	0.461	–0.001	11.71
r_1	0.044	+0.001	1.12

NOTE – Dimension U is the minimum length of the contact-making portion of the pin.

Mass lb	Tolerance	Metric equivalent kg
1	±10%	0.45

Purpose
To check the minimum retention force of the contacts.

For details of the G7.9 and GX7.9 lampholders, see ANSI C81.62, Standard Sheet 2-356.

Testing
After first checking the lampholder for acceptance of the "Go" gauge, insert the proper end of this retention gauge into the proper lampholder contacts so that surface x is in contact with reference plane x of the lampholder. With the lampholder held recess-down in a vertical position, check whether the gauge falls out by its own weight.

Copyright National Electrical Manufacturers Association
Provided by IHS under license with NEMA
No reproduction or networking permitted without license from IHS
Not for Resale

"GO" GAUGE FOR UNMOUNTED CAPS (NOT FOR USE ON FINISHED LAMPS)
CALIBRE "ENTRE" POUR CULOTS NON ASSEMBLES (NE PAS UTILISER SUR DES LAMPES TERMINEES)
GR8

Dimensions in millimetres - Dimensions en millimètres

The drawing is intended only to illustrate the dimensions essential for interchangeability.
Le dessin a pour seul but d'illustrer les dimensions essentielles pour l'interchangeabilité.

For details of cap GR8, see sheet 7004-68.
Pour les détails du culot GR8, voir feuille 7004-68.

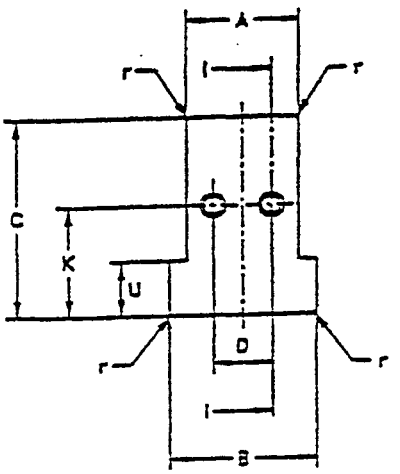

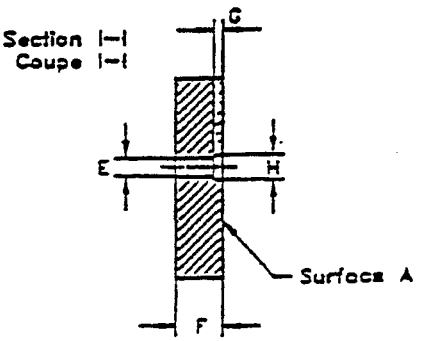

Reference	Dimension	Tolerance
A	15,5	+ 0,0 - 0,01
B	20,3	+ 0,0 - 0,01
C	29,0	+ 0,0 - 0,01
D	8,0	+ 0,005 - 0,005
E	2,6	+ 0,01 - 0,0
F	6,6	+ 0,0 - 0,01
G	1,27	+ 0,01 - 0,0
H	3,61	+ 0,02 - 0,0
K	16,1	+ 0,0 - 0,02
U	8,0	+ 0,5 - 0,5
r	0,8	+ 0,05 - 0,0

PURPOSE: To check dimensions Amin, Bmin, Fmin, Kmin and the combined diameter and displacement of the pins of unmounted bi-pin caps GR8.

TESTING: The pins of the cap shall enter the gauge at surface A and, when fully inserted, the reference plane of the cap and the surface of the gauge shall contact.

BUT: Vérification des dimensions Amin, Bmin, Fmin, Kmin ainsi que de la combinaison des diamètres et de l'espacement des broches des culots à deux broches GR8 non assemblés.

ESSAI: Les broches du culot doivent pénétrer dans le calibre par la surface A et, lorsque le culot est poussé à fond, le plan de référence du culot doit être en contact avec la surface du calibre.

Surface finish: 0,4 µm.
Finition: 0,4 µm.

Copyright National Electrical Manufacturers Association
Provided by IHS under license with NEMA
No reproduction or networking permitted without license from IHS
Not for Resale

GAUGE FOR CAPS TO ENSURE ENTRY OF MAXIMUM LAMPHOLDERS AND TO CHECK PIN-SPACING AND LENGTH
CALIBRE POUR CULOTS POUR LA VERIFICATION DE L'ENTREE DES DOUILLES MAXIMALES ET DE L'ECARTEMENT ET LA LONGUEUR DES BROCHES GR8

Dimensions in millimetres - Dimensions en millimètres

The drawing is intended only to illustrate the dimensions essential for interchangeability.
Le dessin a pour seul but d'illustrer les dimensions essentielles pour l'interchangeabilité.

For details of cap GR8, see sheet 7004-68.
Pour les détails du culot GR8, voir feuille 7004-68.

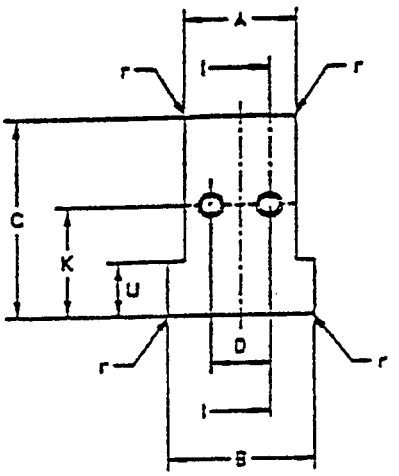

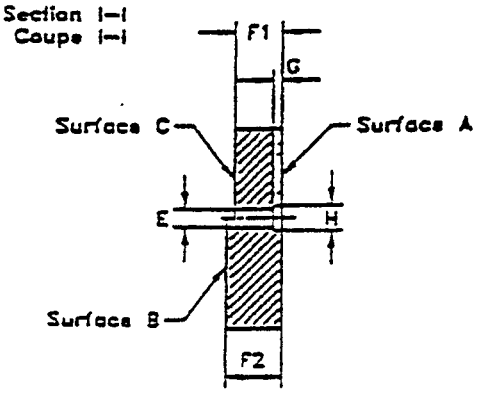

Reference	Dimension	Tolerance
A	15.5	+ 0.0 - 0.01
B	20.3	+ 0.0 - 0.01
C	29.0	+ 0.0 - 0.01
D	8.0	+ 0.005 - 0.005
E	2.79	+ 0.01 - 0.0
F1	6.6	+ 0.0 - 0.01
F2	7.77	+ 0.01 - 0.0
G	1.27	+ 0.01 - 0.0
H	3.61	+ 0.02 - 0.0
K	16.1	+ 0.0 - 0.02
U	8.0	+ 0.5 - 0.5
r	0.8	+ 0.05 - 0.0

PURPOSE: To check dimensions Amin, Bmin, Fmin, Fmax, Kmin and the combined diameter and displacement of the pins of bi-pin caps GR8 on finished lamps.

TESTING: The pins of the cap shall enter the gauge at surface A and, when fully inserted, the reference plane of the cap and the surface of the gauge shall contact.
In this position the ends of the pins shall be co-planar with or project beyond surface C but they shall not project beyond surface B.

BUT: Vérification des dimensions Amin, Bmin, Fmin, Fmax, Kmin ainsi que de la combinaison des diamètres et de l'espacement des broches des culots à deux broches GR8 sur lampes terminées.

ESSAI: Les broches du culot doivent pénétrer dans le calibre par la surface A et, lorsque le culot est poussé à fond, le plan de référence du culot doit être en contact avec la surface du calibre.
Dans cette position, les extrémités des broches doivent être de niveau avec la surface C ou la dépasser, sans toutefois saillir au-delà de la surface B.

Surface finish: 0,4 µm.
Finition: 0,4 µm.

Copyright National Electrical Manufacturers Association
Provided by IHS under license with NEMA
No reproduction or networking permitted without license from IHS
Not for Resale

GAUGES "A" AND "B" FOR CHECKING DIMENSION M OF CAPS ON FINISHED LAMPS

CALIBRES "A" ET "B" POUR LA VERIFICATION DE LA DIMENSION M DANS LES CULOTS SUR LAMPES TERMINEES

GR8 & GR10q

Dimensions in millimetres - Dimensions en millimètres

The drawing is intended only to illustrate the essential dimensions of the gauges.
Le dessin a pour seul but d'illustrer les dimensions essentielles des calibres.

For details of caps GR8 and GR10q, see sheets 7004-68 and 7004-77 respectively.
Pour les détails des culots GR8 et GR10q, voir feuilles 7004-68 et 7004-77 respectivement.

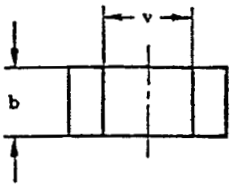

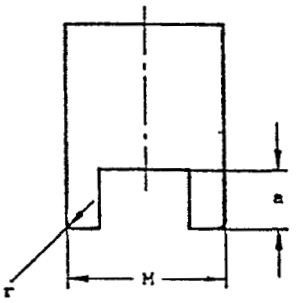

Surface finish 0,4 µm
Finition 0,4 µm

Note. - Testing involves the use of the gauges A and B.
Note. - L'essai implique l'emploi des calibres A et B.

PURPOSE: To check dimension M and its function of caps GR8 and GR10q on finished lamps.

TESTING: Gauge A shall enter the cap under its own weight and it shall pick up the lamp on withdrawal. Gauge B shall enter the cap and not pick up the lamp on withdrawal.

BUT: Vérification de la dimension M des culots GR8 et GR10q sur lampes terminées et de l'efficacité de cette dimension.

ESSAI: Le calibre A doit pénétrer dans le culot par son propre poids et entraîner la lampe lorsqu'on le retire.
Le calibre B doit pénétrer dans le culot de la même manière mais ne doit pas entraîner la lampe lors de son retrait.

Gauge A - Calibre A		
Reference	Dimension	Tolerance
M	20,85	+ 0,005 - 0,005
a	8,0	+ 0,5 - 0,5
b	9,5	+ 0,5 - 0,5
r	0,9	+ 0,05 - 0,0
v	12,0	+ 0,5 - 0,5
Mass Masse	45 g	+ 1 g - 1 g

Gauge B - Calibre B		
Reference	Dimension	Tolerance
M	20,15	+ 0,005 - 0,005
a	8,0	+ 0,5 - 0,5
b	9,5	+ 0,5 - 0,5
r	0,9	+ 0,05 - 0,0
v	12,0	+ 0,5 - 0,5

Copyright National Electrical Manufacturers Association
Provided by IHS under license with NEMA
No reproduction or networking permitted without license from IHS

Not for Resale

GAUGES "A" AND "B" FOR CHECKING MAXIMUM INSERTION FORCE AND MAXIMUM WITHDRAWAL FORCE IN LAMPHOLDERS

CALIBRES "A" ET "B" POUR LA VERIFICATION DE LA FORCE MAXIMALE D'INSERTION ET DE LA FORCE MAXIMALE D'EXTRACTION DANS LES DOUILLES

GR8

Dimensions in millimetres - Dimensions en millimètres

The drawings are intended only to illustrate the essential dimensions of the gauges.
Les dessins ont pour seul but d'illustrer les dimensions essentielles des calibres.

For details of lampholders GR8, see sheet 7005-68.
Pour les détails des douilles GR8, voir feuille 7005-68.

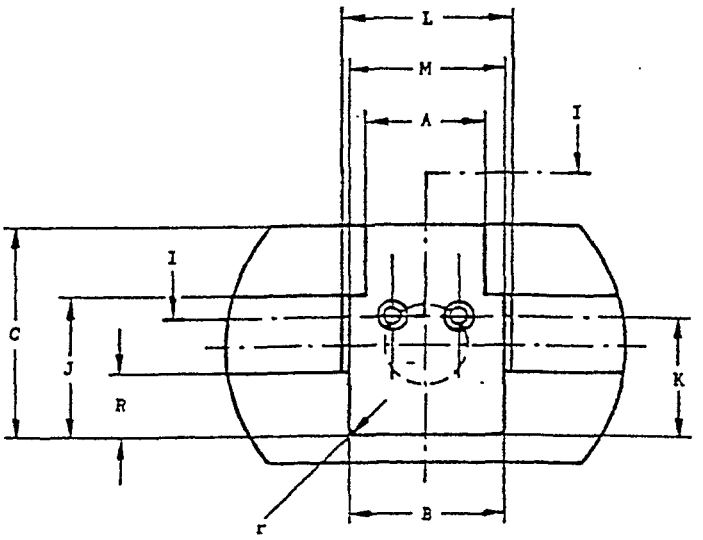

Detail a
Détail a

Scale 5:1
Echelle 5:1

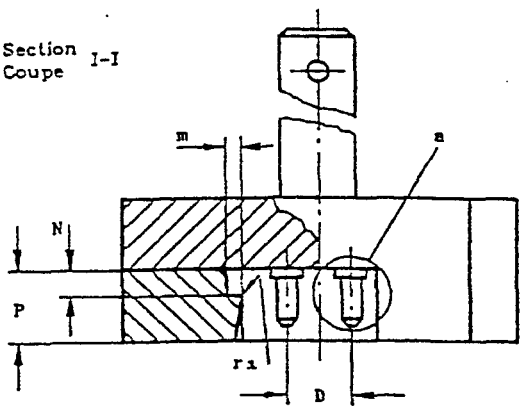

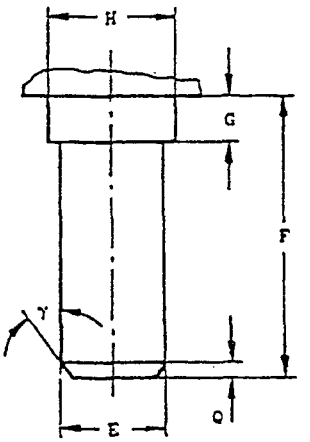

Surface finish 0,4 µm
Finition 0,4 µm

Copyright National Electrical Manufacturers Association
Provided by IHS under license with NEMA
No reproduction or networking permitted without license from IHS
Not for Resale

GAUGES "A" AND "B" FOR CHECKING MAXIMUM INSERTION FORCE AND MAXIMUM WITHDRAWAL FORCE IN LAMPHOLDERS

CALIBRES "A" ET "B" POUR LA VERIFICATION DE LA FORCE MAXIMALE D'INSERTION ET DE LA FORCE MAXIMALE D'EXTRACTION DANS LES DOUILLES

GR8

Dimensions in millimetres - Dimensions en millimètres

Gauge A - Calibre A		
Reference	Dimension	Tolerance
A	15,3	+ 0,05 - 0,0
B	20,15	+ 0,01 - 0,0
C	29,0	+ 0,3 - 0,0
D	8,14	+ 0,005 - 0,005
E	2,67	+ 0,01 - 0,0
F	7,77	+ 0,01 - 0,0
G	1,27	+ 0,01 - 0,0
H	3,3	+ 0,01 - 0,0
J	19,3	+ 0,05 - 0,0
K	16,2	+ 0,01 - 0,01
L	22,0	+ 0,0 - 0,01
M	20,3	+ 0,0 - 0,01
N	3,6	+ 0,01 - 0,0
P	9,9	+ 0,0 - 0,01
Q	0,4	+ 0,1 - 0,1
R	9,0	+ 0,0 - 0,05
m	2,0	+ 0,5 - 0,5
r	0,9	+ 0,05 - 0,0
r_1	0,5	+ 0,0 - 0,2
γ	35°	+ 1° - 1°

Gauge B - Calibre B		
Reference	Dimension	Tolerance
A	15,3	+ 0,05 - 0,0
B	20,15	+ 0,01 - 0,0
C	29,0	+ 0,3 - 0,0
D	7,86	+ 0,005 - 0,005
E	2,67	+ 0,01 - 0,0
F	7,77	+ 0,01 - 0,0
G	1,27	+ 0,01 - 0,0
H	3,3	+ 0,01 - 0,0
J	19,3	+ 0,05 - 0,0
K	16,2	+ 0,01 - 0,01
L	22,0	+ 0,0 - 0,01
M	20,3	+ 0,0 - 0,01
N	3,6	+ 0,01 - 0,0
P	9,9	+ 0,0 - 0,01
Q	0,4	+ 0,1 - 0,1
R	9,0	+ 0,0 - 0,05
m	2,0	+ 0,5 - 0,5
r	0,9	+ 0,05 - 0,0
r_1	0,5	+ 0,0 - 0,2
γ	35°	+ 1° - 1°

Note. - Testing involves the use of gauges A and B.
Note. - L'essai implique l'emploi des calibres A et B.

PURPOSE: To check, in lampholders GR8, the maximum insertion force and maximum withdrawal force related to the dimensions of caps with maximum pin dimensions and with maximum pin spacing (gauge A) and minimum pin spacing (gauge B).

TESTING: It shall be possible to insert each gauge in turn into the lampholder as far as the intended position with a force not exceeding 50N.
After the gauge has been fully inserted into the holder, it shall then be possible to withdraw the gauge with a force not exceeding 40N.

BUT: Vérification des douilles GR8 en ce qui concerne les forces maximales d'insertion et d'extraction dans le cas de culots à dimensions maximales des broches et espacement des broches soit maximal (calibre A), soit minimal (calibre B).

ESSAI: Il doit être possible d'introduire successivement chacun des calibres dans la douille jusqu'à ce que la position prévue soit atteinte, avec une force ne dépassant pas 50N.
Après l'insertion complète du calibre dans la douille, il doit être possible d'en extraire le calibre avec une force ne dépassant pas 40N.

Copyright National Electrical Manufacturers Association
Provided by IHS under license with NEMA
No reproduction or networking permitted without license from IHS

Not for Resale

GAUGE "C" FOR CHECKING MINIMUM RETENTION FORCE IN LAMPHOLDERS
CALIBRE "C" POUR LA VERIFICATION DE LA FORCE MINIMALE DE RETENTION DANS LES DOUILLES
GR8

Dimensions in millimetres - Dimensions en millimètres

The drawings are intended only to illustrate the essential dimensions of the gauge.
Les dessins ont pour seul but d'illustrer les dimensions essentielles du calibre.

For details of lampholders GR8, see sheet 7005-68.
Pour les détails des douilles GR8, voir feuille 7005-68.

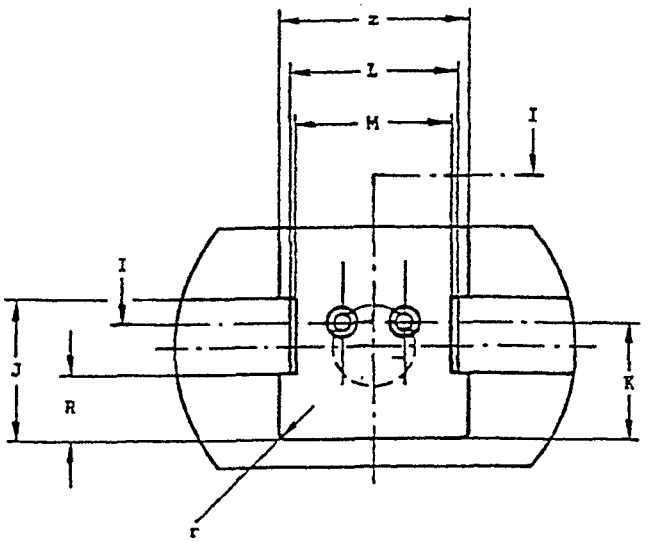

Detail a
Détail a

Scale 5:1
Echelle 5:1

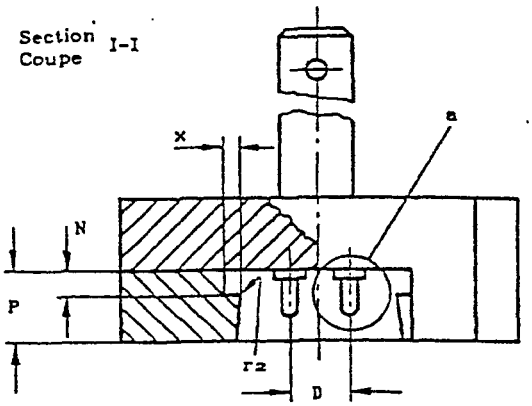

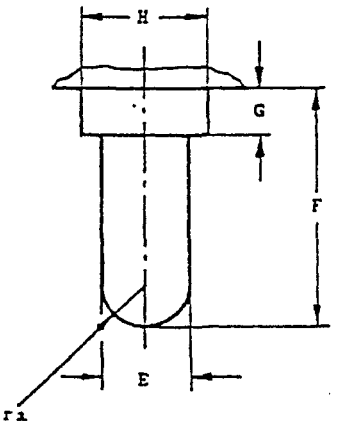

Surface finish 0,4 µm
Finition 0,4 µm

Copyright National Electrical Manufacturers Association
Provided by IHS under license with NEMA
No reproduction or networking permitted without license from IHS
Not for Resale

GAUGE "C" FOR CHECKING MINIMUM RETENTION FORCE IN LAMPHOLDERS

CALIBRE "C" POUR LA VERIFICATION DE LA FORCE MINIMALE DE RETENTION DANS LES DOUILLES

GR8

Dimensions in millimetres - Dimensions en millimètres

Reference	Dimension	Tolerance
D	8,0	+ 0,01 - 0,01
E	2,29	+ 0,0 - 0,01
F	6,6	+ 0,0 - 0,01
G	1,27	+ 0,0 - 0,01
H	3,30	+ 0,0 - 0,01
J	19,3	+ 0,05 - 0,0
K	16,2	+ 0,01 - 0,01
L	22,0	+ 0,0 - 0,01
M	20,5	+ 0,01 - 0,0
N	3,4	+ 0,0 - 0,01
P	9,9	+ 0,01 - 0,0
R	9,0	+ 0,0 - 0,05
r	0,9	+ 0,05 - 0,0
r_1	E/2	-
r_2	0,5	+ 0,0 - 0,2
x	2,0	+ 0,5 - 0,5
z	24,5	+ 0,5 - 0,5

PURPOSE: To check, in lampholders GR8, the minimum retention force related to a cap with minimum pin dimensions.

TESTING: After the gauge has been fully inserted into the lampholder, the force required to withdraw it shall be not less than 5N.

BUT: Vérification des douilles GR8 en ce qui concerne la force minimale de retenue dans le cas d'un culot à dimensions minimales des broches.

ESSAI: Après l'insertion complète du calibre dans la douille, la force nécessaire pour l'en extraire ne doit pas être inférieure à 5N.

Copyright National Electrical Manufacturers Association
Provided by IHS under license with NEMA
No reproduction or networking permitted without license from IHS

Not for Resale

"GO" GAUGE FOR CHECKING THE PINS OF CAPS ON FINISHED LAMPS

CALIBRE "ENTRE" POUR LA VERIFICATION DES BROCHES DES CULOTS SUR LAMPES TERMINEES

GR8 & GR10q

Dimensions in millimetres – Dimensions en millimètres

The drawing is intended only to illustrate the essential dimensions of the gauge.
Le dessin a pour seul but d'illustrer les dimensions essentielles du calibre.

For details of caps GR8 and GR10q, see sheets 7004-68 and 7004-77 respectively.
Pour les détails des culots GR8 et GR10q, voir feuilles 7004-68 et 7004-77 respectivement.

Scale
Echelle 2:1

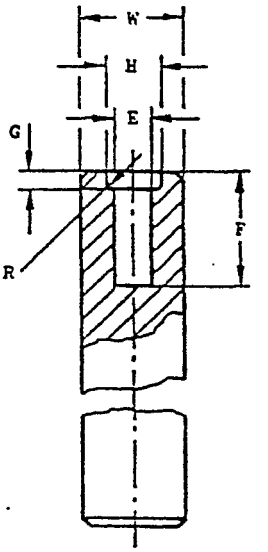

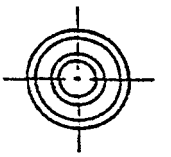

Surface finish 0,4 µm
Finition 0,4 µm

PURPOSE: To check dimensions E max. and F max. of caps GR8 and GR10q respectively.

TESTING: It shall be possible to insert each pin in turn into the hole until the reference plane of the cap and the surface of the gauge contact.

BUT: Vérification des dimensions E max. et F max. des culots GR8 et GR10q respectivement.

ESSAI: Il doit être possible d'introduire successivement chaque broche dans le trou jusqu'à ce que le plan de référence du culot soit en contact avec la surface du calibre.

Reference	Dimension	Tolerance
E	2,67	+ 0,01 – 0,0
F	7,77	+ 0,01 – 0,0
G	1,27	+ 0,01 – 0,0
H	3,61	+ 0,02 – 0,0
R	0,38	+ 0,0 – 0,05
W	6,9	+ 0,1 – 0,1

Copyright National Electrical Manufacturers Association
Provided by IHS under license with NEMA
No reproduction or networking permitted without license from IHS
Not for Resale

"GO" AND "NOT GO" GAUGE FOR CHECKING THE PINS OF CAPS
(NOT FOR USE ON FINISHED LAMPS)

CALIBRE "ENTRE" ET "N'ENTRE PAS" POUR LA VERIFICATION DES BROCHES DES CULOTS
(NE PAS UTILISER SUR LAMPES TERMINEES)

GR8 & GR10q

Dimensions in millimetres - Dimensions en millimètres

The drawing is intended only to illustrate the essential dimensions of the gauge.
Le dessin a pour seul but d'illustrer les dimensions essentielles du calibre.

For details of caps GR8 and GR10q, see sheets 7004-68 and 7004-77 respectively.
Pour les détails des culots GR8 et GR10q, voir feuilles 7004-68 et 7004-77 respectivement.

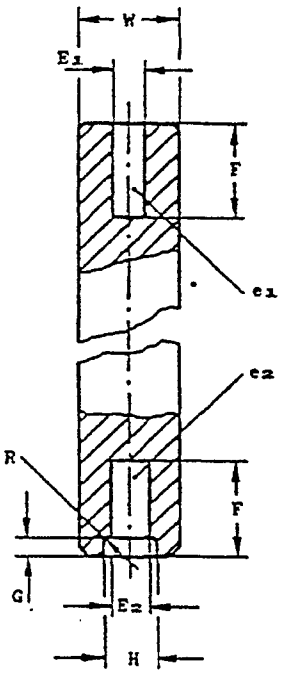

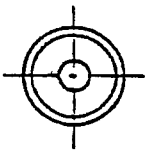

Surface finish 0,4 µm
Finition 0,4 µm

Reference	Dimension	Tolerance
E_1	2,29	+ 0,0 − 0,01
E_2	2,44	+ 0,01 − 0,0
F	6,60	+ 0,0 − 0,01
G	1,27	+ 0,02 − 0,0
H	3,30	+ 0,01 − 0,0
R	0,38	+ 0,0 − 0,05
W	6,9	+ 0,01 − 0,01

PURPOSE: To check dimensions E min. and F min. of unmounted caps GR8 and GR10q respectively.

TESTING: It shall be possible to insert each pin in turn into hole e_2.
The reference plane of the cap and the surface of the gauge shall not make contact.
It shall not be possible to insert the pins, other than the extreme tips, into hole e_1.

BUT: Vérification des dimensions E min. et F min. des culots non assemblés GR8 et GR10q respectivement.

ESSAI: Il doit être possible d'introduire successivement chacune des broches dans le trou e_2.
Le plan de référence du culot et la surface du calibre ne doivent pas être en contact.
Il ne doit pas être possible d'introduire les broches dans le trou e_1, à l'exception de leur pointe extrême.

Copyright National Electrical Manufacturers Association
Provided by IHS under license with NEMA
No reproduction or networking permitted without license from IHS

Not for Resale

"Go" Gauge for G9.5-Based Lamps

The drawing is intended only to illustrate the essential dimensions of the gauge.

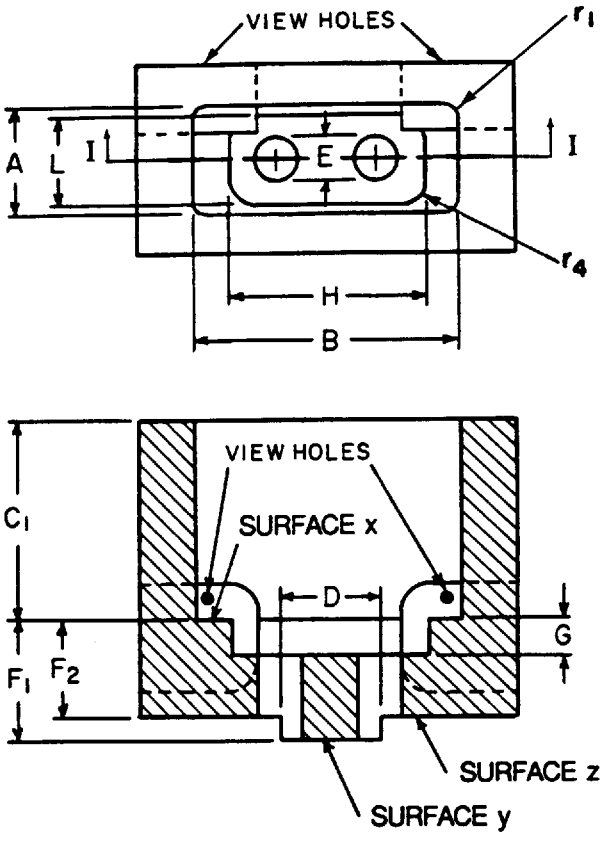

Section I-I

Copyright National Electrical Manufacturers Association
Provided by IHS under license with NEMA
No reproduction or networking permitted without license from IHS
Not for Resale

ANSI C81.63-1991
Std Sheet 3-368-1

Reference	Dimension in	Tolerance in	Nearest metric equivalent mm
A	0.385	+0.001	9.78
B	0.943	+0.001	23.95
C_1	0.750	−0.001	19.05
D	0.375	±0.0002	9.53
E	0.157	+0.0005	3.99
F_1	0.450	+0.001	11.43
F_2	0.375	−0.001	9.53
G	0.119	+0.001	3.02
H	0.720	+0.001	18.29
L	0.310	+0.001	7.87
r_1	0.125	−0.005	3.18
r_4	0.050	−0.005	1.27

Purpose
To check minimum and maximum pin length, the combined pin diameter and displacement of pins, and the maximum projected length and width of G9.5 two-pin bases.

For details of the G9.5 base, see ANSI C81.61, Standard Sheet 1-368.

Testing
Insert the pins on the base of a finished lamp through the cavity and into the holes E of the gauge.

Copyright National Electrical Manufacturers Association
Provided by IHS under license with NEMA
No reproduction or networking permitted without license from IHS
Not for Resale

"Go" Gauge for G9.5 Lampholders

The drawing is intended only to illustrate the essential dimensions of the gauge.

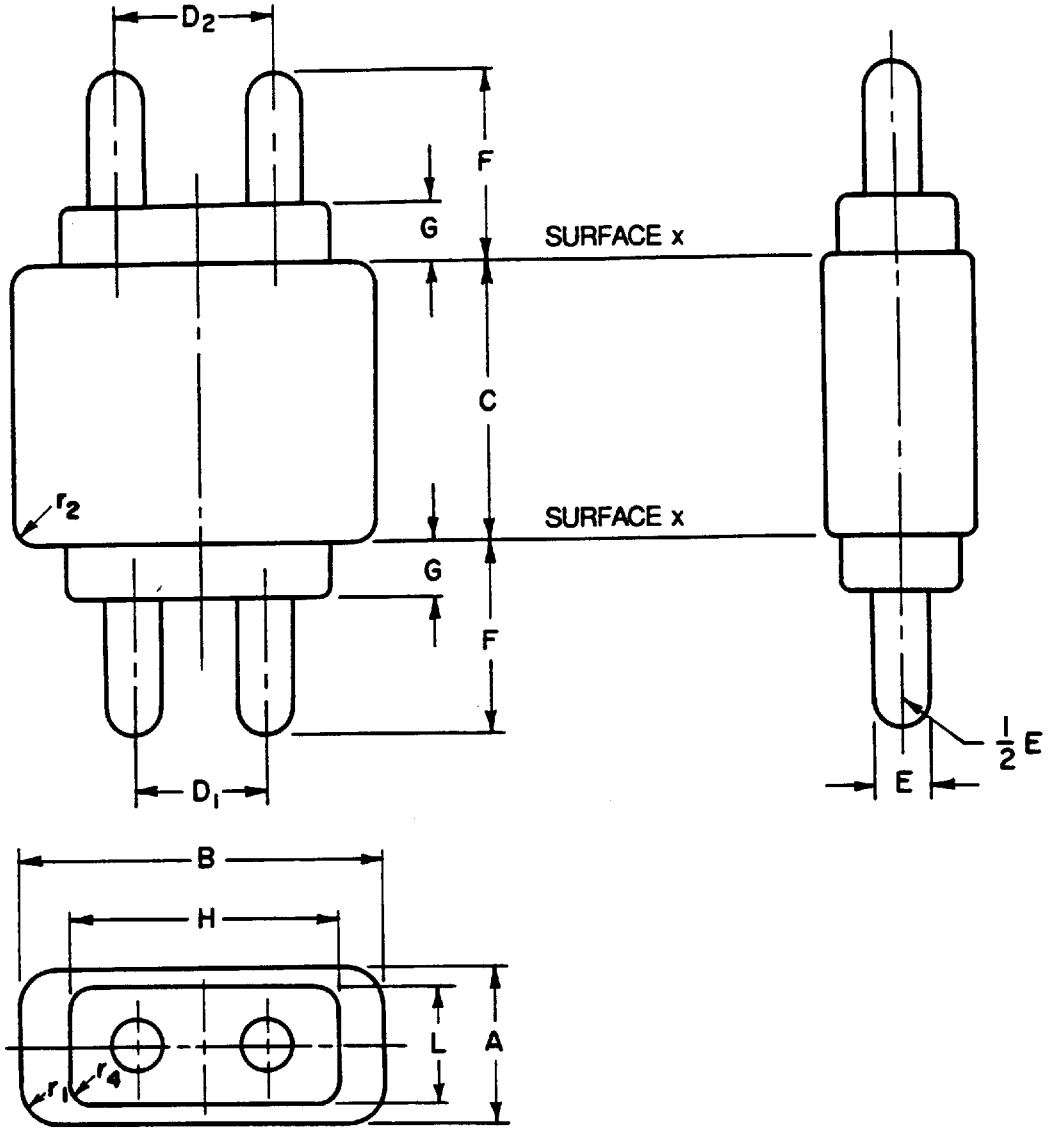

Copyright National Electrical Manufacturers Association
Provided by IHS under license with NEMA
No reproduction or networking permitted without license from IHS
Not for Resale

ANSI C81.63-1991
Std Sheet 3-372-1

Reference	Dimension in	Tolerance in	Nearest metric equivalent mm
A	0.387	–0.001	9.83
B	0.945	–0.001	24.00
C	0.675	+0.001	17.14
D_1	0.345	±0.0005	8.76
D_2	0.405	±0.0005	10.29
E	0.129	–0.001	3.28
F	0.452	–0.001	11.48
G	0.121	–0.001	3.07
H	0.722	–0.001	18.34
L	0.312	–0.001	7.92
r_1	0.110	+0.005	2.79
r_2	0.020	+0.005	0.51
r_4	0.040	+0.005	1.02

Purpose
To check lampholders with respect to fit of maximum dimensioned bases having maximum pin length and maximum pin diameter at both minimum and maximum pin spacings, and to check the maximum depth of the recess in accordance with dimension C.

For details of G9.5 lampholders, see ANSI C81.62, Standard Sheet 2-368.

Testing
Attempt to insert each end of the gauge into the lampholder for contact between surface x of the gauge and surface x of the lampholder. Also, check the relationship of the surface x of the gauge opposite the reference plane to the top edge of the lampholder.

Copyright National Electrical Manufacturers Association
Provided by IHS under license with NEMA
No reproduction or networking permitted without license from IHS
Not for Resale

Minimum Contact Retention Force Gauge for G9.5 Lampholders

This drawing is intended only to illustrate the essential dimensions of the gauge.

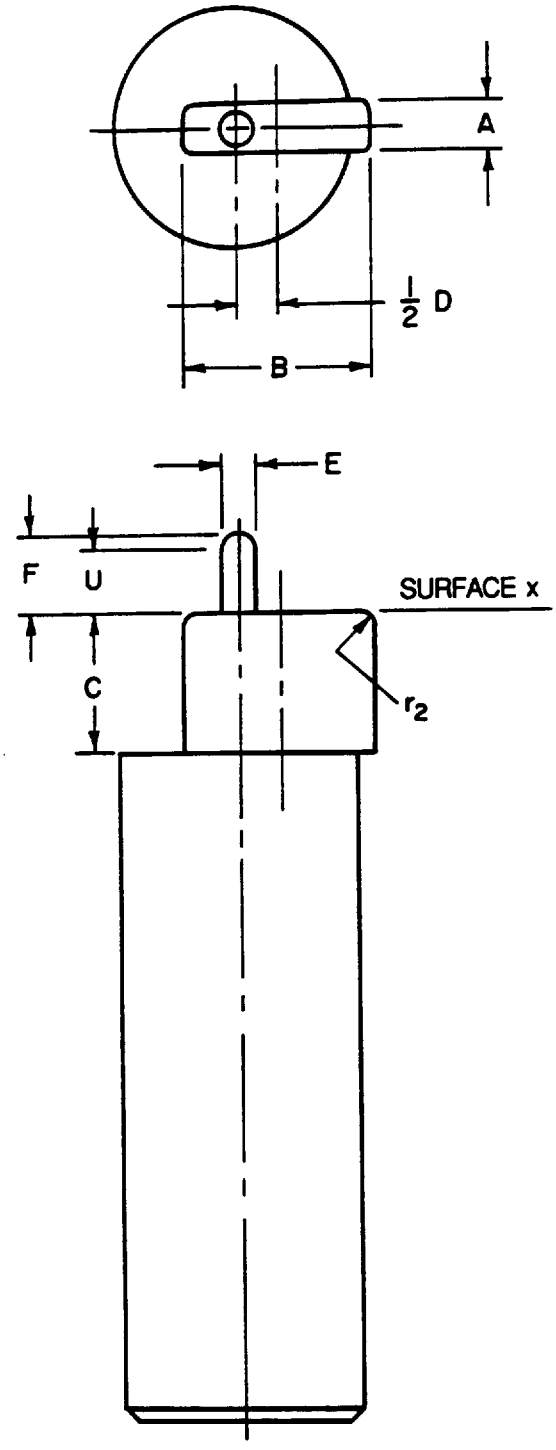

Copyright National Electrical Manufacturers Association
Provided by IHS under license with NEMA
No reproduction or networking permitted without license from IHS
Not for Resale

Reference	Dimension in	Tolerance in	Metric equivalent mm
A	0.275	−0.001	6.98
B	0.923	−0.001	23.44
C	0.675	−0.001	17.14
1/2 D	0.188	±0.001	4.78
E	0.122	−0.001	3.10
F	0.375	−0.001	9.52
U (Note)	0.312	−0.001	7.92
r_2	0.020	±0.005	0.51

NOTE – Dimension U is the minimum length of the cylindrical portion of the pin.

Mass lb	Tolerance	Metric equivalent kg
1	±10%	0.454

Purpose
To check the minimum retention force of the contacts.

For details of G9.5 lampholders, see ANSI C81.62, Standard Sheet 2-368.

Testing
After first checking the lampholder for acceptance of gauge 3-372, described in this standard, insert this gauge into each of the lampholder contacts, in turn, and check the minimum retention force.

Copyright National Electrical Manufacturers Association
Provided by IHS under license with NEMA
No reproduction or networking permitted without license from IHS
Not for Resale

"Go" Gauges for GY9.5- and GZ9.5-Based Lamps

The gauges for the GY9.5 and GZ9.5 bases are identical except for dimension B.

The drawing is intended only to illustrate the essential dimensions of the gauges.

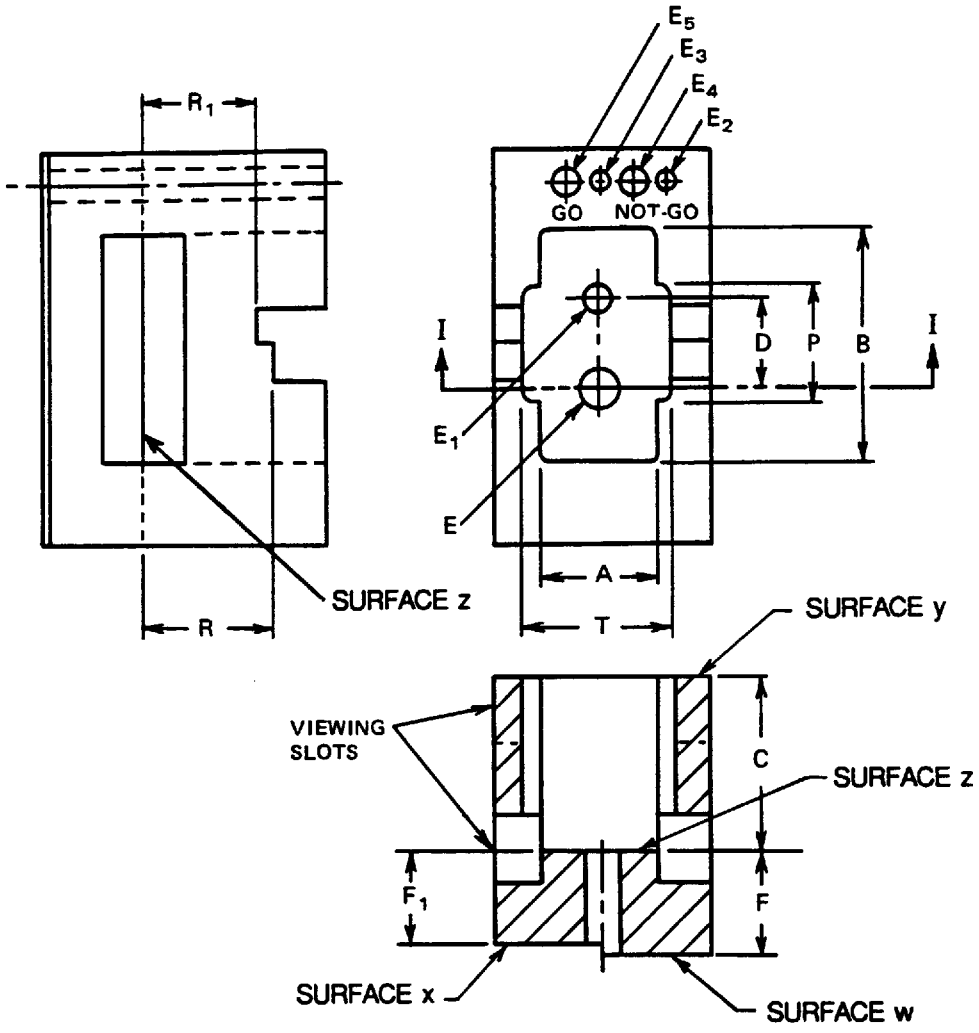

Section I-I

Copyright National Electrical Manufacturers Association
Provided by IHS under license with NEMA
No reproduction or networking permitted without license from IHS
Not for Resale

Reference	Dimension in	Tolerance in	Nearest metric equivalent mm
A	0.440	+0.001	11.18
B (GY9.5)	1.181	+0.001	30.00
B (GZ9.5)	0.960	+0.001	24.38
C	0.620	+0.001	15.75
D	0.375	±0.0005	9.53
E	0.138	+0.0005	3.51
E_1 (dia)	0.103	+0.0005	2.62
E_2 (dia)	0.090	−0.0005	2.29
E_3 (dia)	0.096	+0.0005	2.44
E_4 (dia)	0.122	−0.0005	3.10
E_5 (dia)	0.128	+0.0005	3.25
F	0.340	+0.001	8.64
F_1	0.280	−0.001	7.11
P	0.400	+0.001	10.16
R	0.325	+0.001	8.26
R_1	0.305	−0.001	7.75
T	0.565	+0.001	14.35

NOTE – *The feature for checking the diameters of the individual pins may form a separate gauge.*

Purpose

To check the following aspects of GY9.5 and GZ9.5 bases on finished lamps:

a) The combined displacement and diameter of the pins (dimensions D and E) with respect to maximum horizontal section of the base (dimensions A max, B max, P max, and T max);

b) The minimum height of the shell (dimension C);

c) The height of the retainer projections (dimension R);

d) The length of the pins (dimension F);

e) The diameters of the individual pins (dimensions E_1 and E_2).

For details of GY9.5/GZ9.5 bases, see ANSI C81.61, Standard Sheet 1-369.

Testing

Attempt to insert the base into the gauge and check to see if the supporting bosses are in contact with surface z of the gauge.

Copyright National Electrical Manufacturers Association
Provided by IHS under license with NEMA
No reproduction or networking permitted without license from IHS
Not for Resale

If so, check the pin length in relation to the surfaces x and w. Also, check the relationship of the top edge of the shell with surface y, and check the edges of the retainer projections in relation to the surface at distances R and R_1.

Attempt to insert the appropriate individual pins into holes E_5 and E_3, and into E_4 and E_2, and check the relationship of the surface of the gauge and the supporting bosses.

Copyright National Electrical Manufacturers Association
Provided by IHS under license with NEMA
No reproduction or networking permitted without license from IHS
Not for Resale

"Go" Gauges for GY9.5 and GZ9.5 Lampholders

The gauges for the GY9.5 and GZ9.5 lampholders are identical except for dimensions B and J. The drawing is intended only to illustrate the essential dimensions of the gauges.

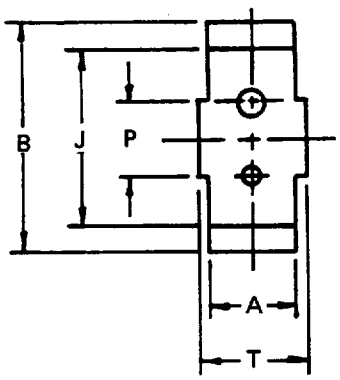

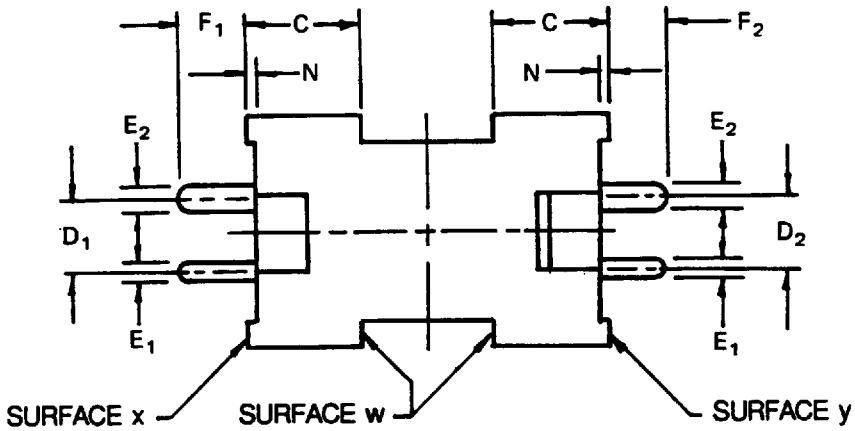

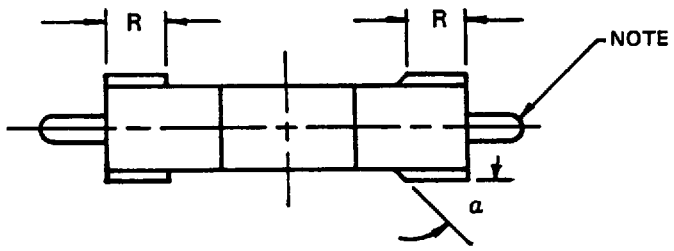

NOTE – The ends of the pin shall be rounded or tapered to provide easy entry into and removal from lampholders.

Copyright National Electrical Manufacturers Association
Provided by IHS under license with NEMA
No reproduction or networking permitted without license from IHS
Not for Resale

Reference	Dimension in	Tolerance in	Nearest metric equivalent mm
A	0.450	–0.001	11.43
B (GY9.5)	1.200	–0.001	30.48
B (GZ9.5)	0.970	–0.001	24.64
C	0.600	+0.001	15.24
D_1	0.366	±0.0004	9.3
D_2	0.384	±0.0004	9.75
E_1	0.097	–0.0004	2.46
E_2	0.129	–0.0004	3.28
F_1	0.342	–0.001	8.69
F_2	0.295	±0.002	7.5
J (GY9.5)	0.900	–0.002	22.86
J (GZ9.5)	0.700	–0.002	17.78
N	0.039	–0.001	1.0
P	0.390	–0.001	9.91
R	0.325	–0.001	8.26
T	0.565	–0.001	14.35
α (degrees)	40°	±5°	40°

Purpose
To check the following aspects of GY9.5 and GZ9.5 lampholders on finished lamps:

a) The fit of bases having maximum pin length and maximum pin spacings (dimension D, E_1 max, E_2 max, F max);

b) The major dimension of the minimum flat seating area (dimension J);

c) The minimum horizontal space above the reference plane for the can (dimensions A, B, P, T, and R);

d) The maximum distance from the reference plane to the edge of any shroud or similar projection(s) (dimension C);

e) The effectiveness of any lamp retention system.

For details of GY9.5 and GZ9.5 lampholders, see ANSI C81.62, Standard Sheet 2-369.

Testing
Insert each end of the gauge into the holder and check the relationship of gauge surfaces x and y, respectively, with the intended seating surface.

When the surfaces x and y are in contact with the seating surface, check the engagements of any retainers that may be provided with the simulated retainer projections adjacent to the pins.

Copyright National Electrical Manufacturers Association
Provided by IHS under license with NEMA
No reproduction or networking permitted without license from IHS
Not for Resale

"Not-Go" Gauge for GY9.5 and GZ9.5 Lampholders

The drawing is intended only to illustrate the essential dimensions of the gauge.

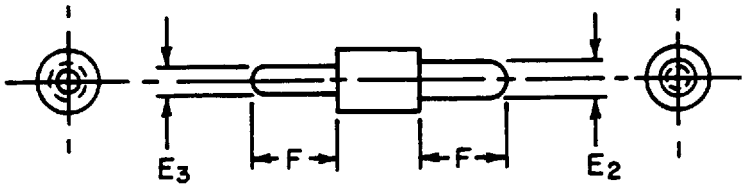

Reference	Dimension in	Tolerance in	Nearest metric equivalent mm
E_2	0.146	+0.0005	3.71
E_3	0.116	+0.0005	2.95
F	0.342	−0.001	8.69

Purpose
To check dimensions E max and E_1 max of lampholders.

For details of GY9.5 and GZ9.5 lampholders, see ANSI C81.62, Standard Sheet 2-369.

Testing
Check dimension E of the lampholder with gauge pin E_2 and dimension E_1 of the holder with gauge pin E_3 to determine whether or not gauge pins E_2 and E_3 engage the electrical contacts of the holder.

Copyright National Electrical Manufacturers Association
Provided by IHS under license with NEMA
No reproduction or networking permitted without license from IHS
Not for Resale

"Go" Gauge for G10q Four-Pin Circular Fluorescent Lamp Bases on Finished Lamps

The drawings are intended only to illustrate the essential dimensions of the gauge.

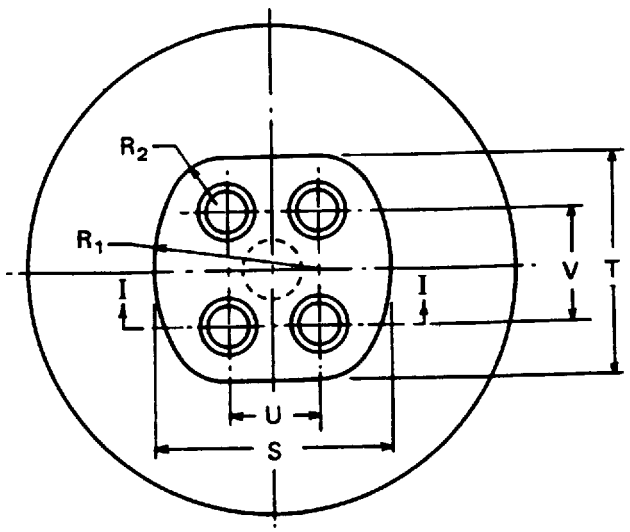

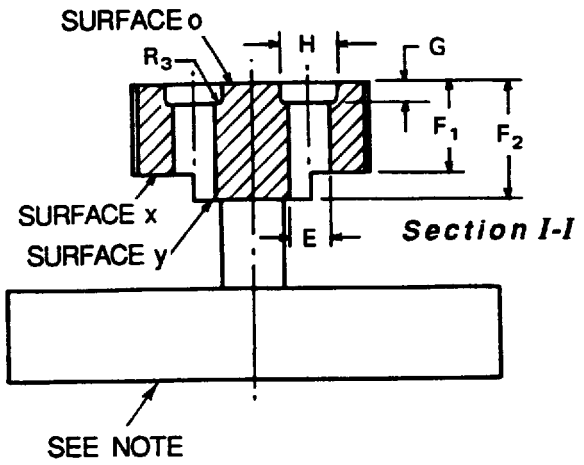

NOTE – This section is used merely to provide additional mass so as to bring the total mass of the gauge to 1 lb ±10% (0.45 kg ±10%).

Reference	Dimension in	Tolerance in	Nearest metric equivalent mm
E (4 holes)	0.108	+0.0004	2.74
F_1	0.250	−0.001	6.35
F_2	0.300	+0.001	7.62
G	0.050	±0.003	1.27
H	0.138	±0.003	3.50
R_1	0.457	±0.003	11.61
R_2	0.150	±0.003	3.81
R_3	0.016	−0.0004	0.40
S	0.642	−0.001	16.31
T	0.618	−0.001	15.70
U	0.250	±0.0002	6.35
V	0.312	±0.0002	7.92

Copyright National Electrical Manufacturers Association
Provided by IHS under license with NEMA
No reproduction or networking permitted without license from IHS
Not for Resale

ANSI C81.63-1991
Std Sheet 3-383-1

Purpose

To check dimensions F min (F_1), F max (F_2), and the combined pin diameter and displacement of pins (including bosses).

For details of G10q bases, see ANSI C81.61, Standard Sheet 1-383.

Testing

Attempt to insert the pins of bases on finished lamps into the gauge at surface o. Check for the relationship of surface o and the bottom of the base cavity, using only the mass of the gauge itself. Check the relationship of the pin ends and gauge surfaces x and y.

Copyright National Electrical Manufacturers Association
Provided by IHS under license with NEMA
No reproduction or networking permitted without license from IHS
Not for Resale

Contact spacing Gauges for G10q Four-Pin Lampholders for Circular Fluorescent Lamps

The two contact spacing gauges, having all dimensions identical except for pin spacing, are specified below in their essential features.

Gauge number	Used to check dimension	Reference
1	U min and V min	U_1,V_1
2	U max and V max	U_2,V_2

The drawings are intended only to illustrate the essential dimensions of the gauges.

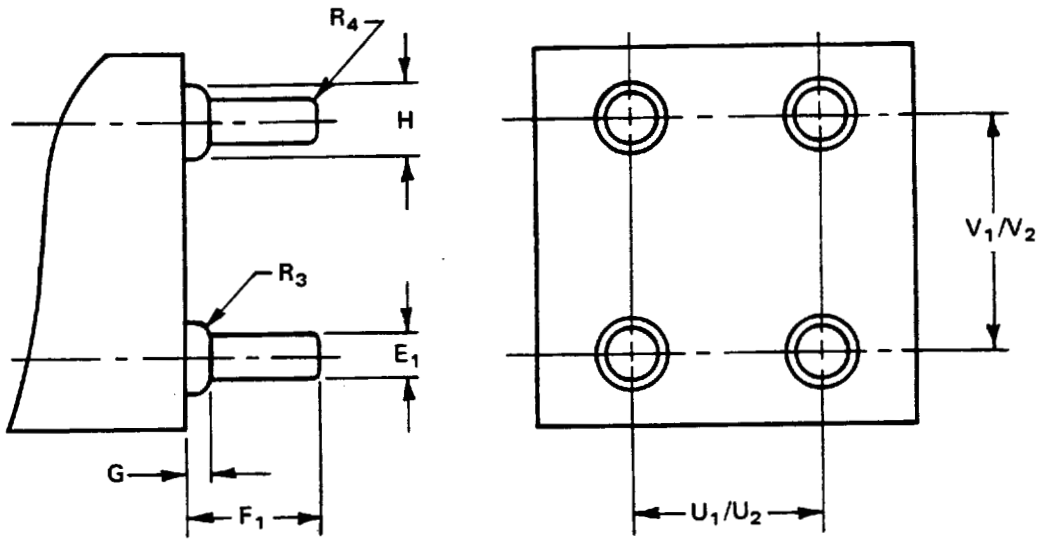

Reference	Dimension in	Tolerance in	Nearest metric equivalent mm
E_1	0.100	+0.0004	2.54
F_1	0.302	+0.001	7.67
G	0.051	−0.0004	1.30
H	0.130	−0.0004	3.31
R_3	0.015	+0.0004	0.38
R_4	0.032	±0.005	0.81
U_1 (Gauge 1)	0.241	±0.0002	6.13
U_2 (Gauge 2)	0.259	±0.0002	6.57
V_1 (Gauge 1)	0.303	±0.0002	7.70
V_2 (Gauge 2)	0.320	±0.0002	8.14

Copyright National Electrical Manufacturers Association
Provided by IHS under license with NEMA
No reproduction or networking permitted without license from IHS
Not for Resale

ANSI C81.63-1991
Std Sheet 3-386-1

Purpose
To ensure that the contacts of the lampholder G10q will accept the pins of G10q bases having the most adverse pin dimensions and spacing.

For details of G10q lampholders, see ANSI C81.62, Standard Sheet 2-383.

Testing
Without undue force, attempt to insert the pins of each gauge into the corresponding holes of the lampholder, and check the relationship of the gauge face to the reference plane of the lampholder.

Copyright National Electrical Manufacturers Association
Provided by IHS under license with NEMA
No reproduction or networking permitted without license from IHS
Not for Resale

Contact Depth Gauge for Four-Pin G10q Lampholders for Circular Fluorescent Lamps

The drawing in Figure 1 is intended only to illustrate the essential dimensions of the gauge.

Figure 2 shows the continuity test circuit.

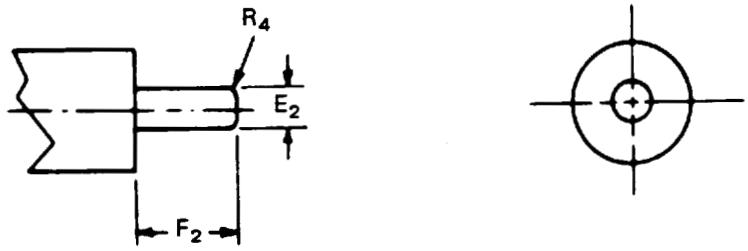

Reference	Dimension in	Tolerance in	Nearest metric equivalent mm
E_2	0.093	±0.002	2.28
F_2	0.302	–0.001	6.30
R_4	0.032	±0.005	0.70

Figure 1 – Pin dimensions

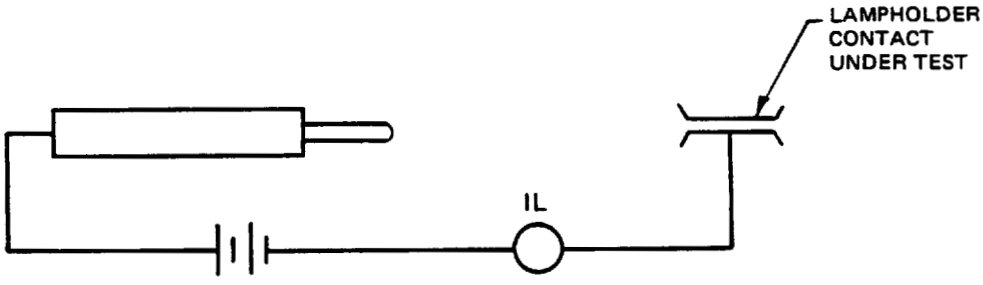

Figure 2 – Continuity test circuit

Purpose

To check the contact making of an individual contact.

For details of G10q lampholders, see ANSI C81.62, Standard Sheet 2-383.

Copyright National Electrical Manufacturers Association
Provided by IHS under license with NEMA
No reproduction or networking permitted without license from IHS
Not for Resale

Testing

After checking the holder with gauge 3-386, insert the pin of the gauge into each of the four contacts of the holder, in turn, and check for lack of contact making.

Copyright National Electrical Manufacturers Association
Provided by IHS under license with NEMA
No reproduction or networking permitted without license from IHS
Not for Resale

"GO" GAUGE FOR UNMOUNTED CAPS (NOT FOR USE ON FINISHED LAMPS)
CALIBRE "ENTRE" POUR CULOTS NON ASSEMBLES (NE PAS UTILISER SUR DES LAMPES TERMINEES)
GR10q

Dimensions in millimetres - Dimensions en millimètres

The drawing is intended only to illustrate the dimensions essential for interchangeability.
Le dessin a pour seul but d'illustrer les dimensions essentielles pour l'interchangeabilité.

For details of cap GR10q, see sheet 7004-77.
Pour les détails du culot GR10q, voir feuille 7004-77.

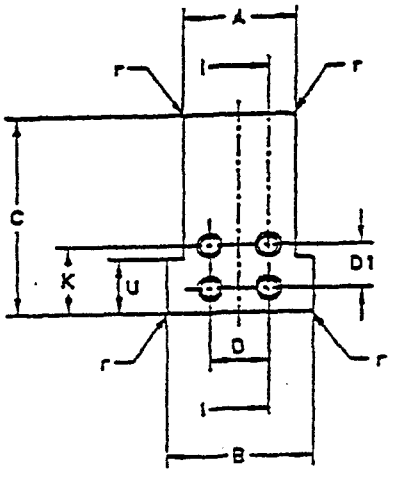

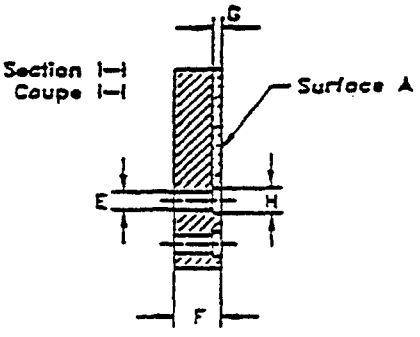

Reference	Dimension	Tolerance
A	15.5	+ 0.0 - 0.01
B	20.3	+ 0.0 - 0.01
C	29.0	+ 0.0 - 0.01
D	8.0	+ 0.005 - 0.005
D1	6.35	+ 0.005 - 0.005
E	2.6	+ 0.01 - 0.0
F	6.6	+ 0.0 - 0.01
G	1.27	+ 0.01 - 0.0
H	3.61	+ 0.02 - 0.0
K	9.9	+ 0.0 - 0.02
U	8.0	+ 0.5 - 0.5
r	0.8	+ 0.05 - 0.0

PURPOSE: To check dimensions Amin, Bmin, Fmin, Kmin and the combined diameter and displacement of the pins of unmounted bi-pin caps GR10q.

TESTING: The pins of the cap shall enter the gauge at surface A and, when fully inserted, the reference plane of the cap and the surface of the gauge shall contact.

BUT: Vérification des dimensions Amin, Bmin, Fmin, Kmin ainsi que de la combinaison des diamètres et de l'espacement des broches des culots à deux broches GR10q non assemblés.

ESSAI: Les broches du culot doivent pénétrer dans le calibre par la surface A et, lorsque le culot est poussé à fond, le plan de référence du culot doit être en contact avec la surface du calibre.

Surface finish: 0.4 µm.
Finition: 0.4 µm.

Copyright National Electrical Manufacturers Association
Provided by IHS under license with NEMA
No reproduction or networking permitted without license from IHS
Not for Resale

GAUGE FOR CAPS TO ENSURE ENTRY OF MAXIMUM LAMPHOLDERS AND TO CHECK PIN-SPACING AND LENGTH
CALIBRE POUR CULOTS POUR LA VERIFICATION DE L'ENTREE DES DOUILLES MAXIMALES ET DE L'ECARTEMENT ET LA LONGUEUR DES BROCHES GR10q

Dimensions in millimetres - Dimensions en millimètres

The drawing is intended only to illustrate the dimensions essential for interchangeability.
Le dessin a pour seul but d'illustrer les dimensions essentielles pour l'interchangeabilité.

For details of cap GR10q, see sheet 7004-77.
Pour les détails du culot GR10q, voir feuille 7004-77.

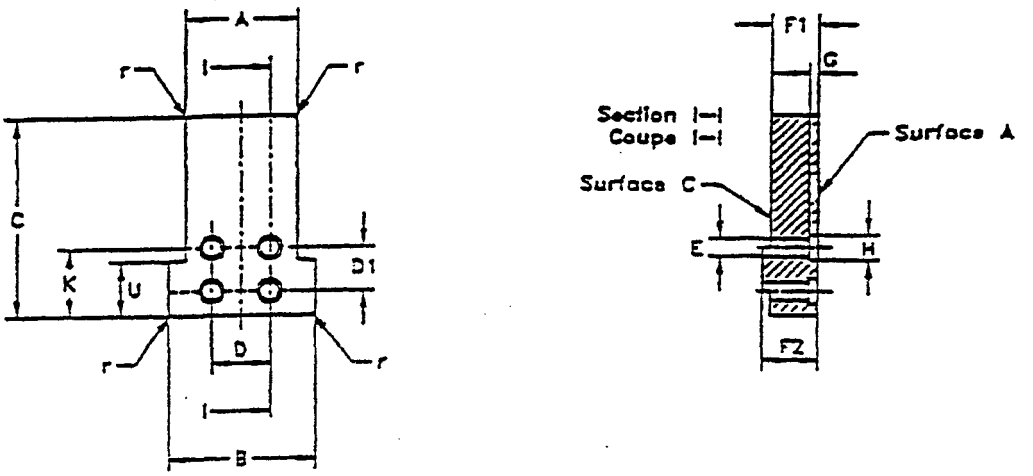

Reference	Dimension	Tolerance
A	15,5	+ 0,0 - 0,01
B	20,3	+ 0,0 - 0,01
C	29,0	+ 0,0 - 0,01
D	8,0	+ 0,005 - 0,005
D1	6,35	+ 0,005 - 0,005
E	2,79	+ 0,01 - 0,0
F1	6,6	+ 0,0 - 0,01
F2	7,77	+ 0,01 - 0,0
G	1,27	+ 0,01 - 0,0
H	3,61	+ 0,02 - 0,0
K	9,9	+ 0,0 - 0,02
U	8,0	+ 0,5 - 0,5
r	0,8	+ 0,05 - 0,0

PURPOSE: To check dimensions Amin, Bmin, Fmin, Fmax, Kmin and the combined diameter and displacement of the pins of bi-pin caps GR10q on finished lamps.

TESTING: The pins of the cap shall enter the gauge at surface A and, when fully inserted, the reference plane of the cap and the surface of the gauge shall contact.
In this position the ends of the pins shall be co-planar with or project beyond surface C, but they shall not project beyond surface B.

BUT: Vérification des dimensions Amin, Bmin, Fmin, Fmax, Kmin ainsi que de la combinaison des diamètres et de l'espacement des broches des culots à deux broches GR10q sur lampes terminées.

ESSAI: Les broches du culot doivent pénétrer dans le calibre par la surface A et, lorsque le culot est poussé à fond, le plan de référence du culot doit être en contact avec la surface du calibre.
Dans cette position, les extrémités des broches doivent être de niveau avec la surface C ou la dépasser, sans toutefois saillir au-delà de la surface B.

Surface finish: 0,4 µm.
Finition: 0,4 µm.

Copyright National Electrical Manufacturers Association
Provided by IHS under license with NEMA
No reproduction or networking permitted without license from IHS
Not for Resale

GAUGES "A" AND "B" FOR CHECKING MAXIMUM INSERTION FORCE AND MAXIMUM WITHDRAWAL FORCE IN LAMPHOLDERS

CALIBRES "A" ET "B" POUR LA VERIFICATION DE LA FORCE MAXIMALE D'INSERTION ET DE LA FORCE MAXIMALE D'EXTRACTION DANS LES DOUILLES

GR10q

Dimensions in millimetres - Dimensions en millimètres

The drawings are intended only to illustrate the essential dimensions of the gauges.
Les dessins ont pour seul but d'illustrer les dimensions essentielles des calibres.

For details of lampholders GR10q, see sheet 7005-77.
Pour les détails des douilles GR10q, voir feuille 7005-77.

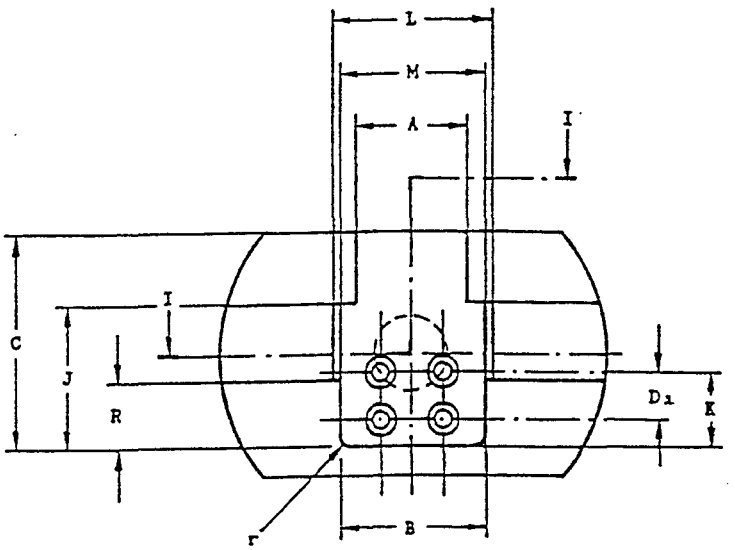

Detail a
Détail a

Scale 5:1
Echelle 5:1

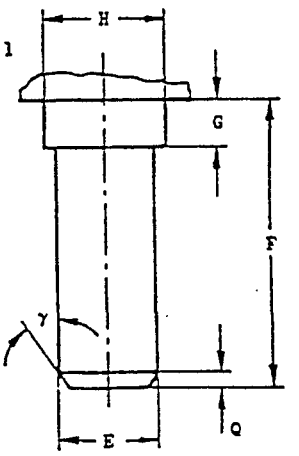

Section I-I
Coupe I-I

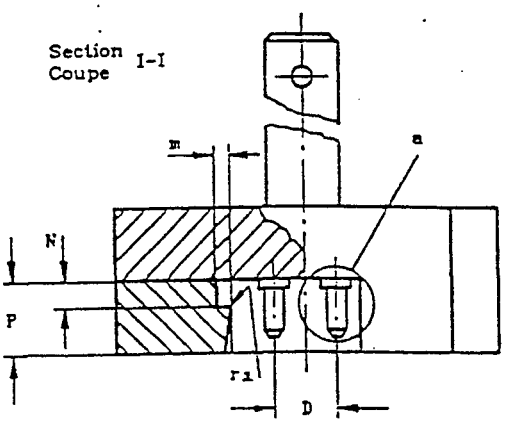

Surface finish 0,4 µm
Finition 0,4 µm

Copyright National Electrical Manufacturers Association
Provided by IHS under license with NEMA
No reproduction or networking permitted without license from IHS

Not for Resale

GAUGES "A" AND "B" FOR CHECKING MAXIMUM INSERTION FORCE AND MAXIMUM WITHDRAWAL FORCE IN LAMPHOLDERS

CALIBRES "A" ET "B" POUR LA VERIFICATION DE LA FORCE MAXIMALE D'INSERTION ET DE LA FORCE MAXIMALE D'EXTRACTION DANS LES DOUILLES

GR10q

Dimensions in millimetres - Dimensions en millimètres

Gauge A - Calibre A		
Reference	Dimension	Tolerance
A	15,3	+ 0,05 - 0,0
B	20,15	+ 0,01 - 0,0
C	29,0	+ 0,3 - 0,0
D	8,14	+ 0,005 - 0,005
D_1	6,49	+ 0,005 - 0,005
E	2,67	+ 0,01 - 0,0
F	7,77	+ 0,01 - 0,0
G	1,27	+ 0,01 - 0,0
H	3,3	+ 0,01 - 0,0
J	19,3	+ 0,05 - 0,0
K	10,0	+ 0,01 - 0,01
L	22,0	+ 0,0 - 0,01
M	20,3	+ 0,0 - 0,01
N	3,6	+ 0,01 - 0,0
P	9,9	+ 0,0 - 0,01
Q	0,4	+ 0,1 - 0,1
R	9,0	+ 0,0 - 0,05
m	2,0	+ 0,5 - 0,5
r	0,9	+ 0,05 - 0,0
r_1	0,5	+ 0,0 - 0,2
γ	35°	+ 1° - 1°

Gauge B - Calibre B		
Reference	Dimension	Tolerance
A	15,3	+ 0,05 - 0,0
B	20,15	+ 0,01 - 0,0
C	29,0	+ 0,3 - 0,0
D	7,86	+ 0,005 - 0,005
D_1	6,21	+ 0,005 - 0,005
E	2,67	+ 0,01 - 0,0
F	7,77	+ 0,01 - 0,0
G	1,27	+ 0,01 - 0,0
H	3,3	+ 0,01 - 0,0
J	19,3	+ 0,05 - 0,0
K	10,0	+ 0,01 - 0,01
L	22,0	+ 0,0 - 0,01
M	20,3	+ 0,0 - 0,01
N	3,6	+ 0,01 - 0,0
P	9,9	+ 0,0 - 0,01
Q	0,4	+ 0,1 - 0,1
R	9,0	+ 0,0 - 0,05
m	2,0	+ 0,5 - 0,5
r	0,9	+ 0,05 - 0,0
r_1	0,5	+ 0,0 - 0,2
γ	35°	+ 1° - 1°

Note. - Testing involves the use of gauges A and B.
Note. - L'essai implique l'emploi des calibres A et B.

PURPOSE: To check, in lampholders GR10q, the maximum insertion force and maximum withdrawal force related to the dimensions of caps with maximum pin dimensions and with maximum pin spacing (gauge A) and minimum pin spacing (gauge B).

TESTING: It shall be possible to insert each gauge in turn into the lampholder as far as the intended position with a force not exceeding 50N.
After the gauge has been fully inserted into the holder, it shall then be possible to withdraw the gauge with a force not exceeding 40N.

BUT: Vérification des douilles GR10q en ce qui concerne les forces maximales d'insertion et d'extraction dans le cas de culots à dimensions maximales des broches et espacement des broches soit maximal (calibre A), soit minimal (calibre B).

ESSAI: Il doit être possible d'introduire successivement chacun des calibres dans la douille jusqu'à ce que la position prévue soit atteinte, avec une force ne dépassant pas 50N.
Après l'insertion complète du calibre dans la douille, il doit être possible d'en extraire le calibre avec une force ne dépassant pas 40N.

Copyright National Electrical Manufacturers Association
Provided by IHS under license with NEMA
No reproduction or networking permitted without license from IHS
Not for Resale

GAUGE "C" FOR CHECKING MINIMUM RETENTION FORCE IN LAMPHOLDERS
CALIBRE "C" POUR LA VERIFICATION DE LA FORCE MINIMALE DE RETENUE DANS LES DOUILLES

GR10q

Dimensions in millimetres - Dimensions en millimètres

The drawings are intended only to illustrate the essential dimensions of the gauge.
Les dessins ont pour seul but d'illustrer les dimensions essentielles du calibre.

For details of lampholders GR10q, see sheet 7005-77.
Pour les détails des douilles GR10q, voir feuille 7005-77.

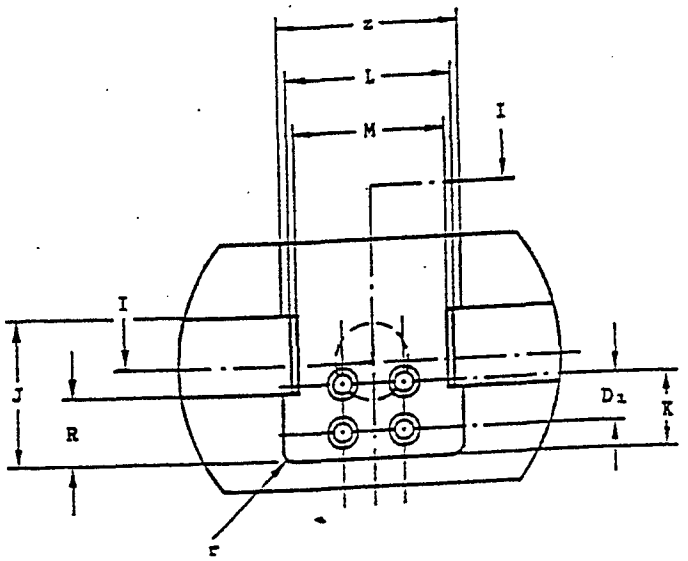

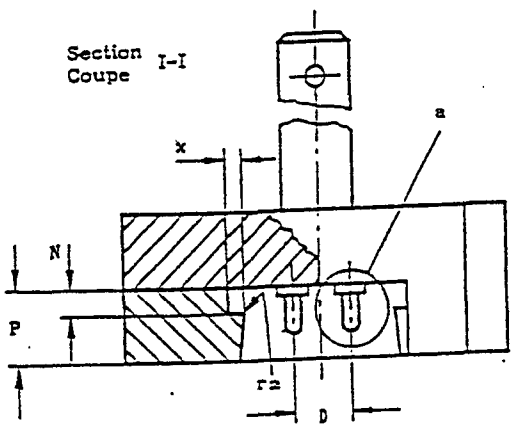

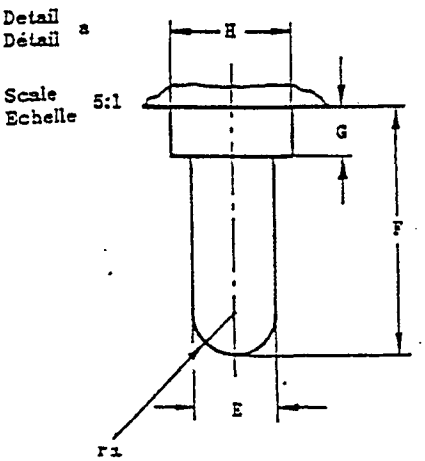

Surface finish 0,4 µm
Finition 0,4 µm

Copyright National Electrical Manufacturers Association
Provided by IHS under license with NEMA
No reproduction or networking permitted without license from IHS
Not for Resale

Dimensions in millimetres – Dimensions en millimètres

Reference	Dimension	Tolerance
D	8,0	+ 0,01 – 0,01
D_1	6,35	+ 0,01 – 0,01
E	2,29	+ 0,0 – 0,01
F	6,6	+ 0,0 – 0,01
G	1,27	+ 0,0 – 0,01
H	3,30	+ 0,0 – 0,01
J	19,3	+ 0,05 – 0,0
K	10,0	+ 0,01 – 0,01
L	22,0	+ 0,0 – 0,01
M	20,5	+ 0,01 – 0,0
N	3,4	+ 0,0 – 0,01
P	9,9	+ 0,01 – 0,0
R	9,0	+ 0,0 – 0,05
r	0,9	+ 0,05 – 0,0
r_1	E/2	–
r_2	0,5	+ 0,0 – 0,2
x	2,0	+ 0,5 – 0,5
z	24,5	+ 0,5 – 0,5

PURPOSE: To check, in lampholders GR10q, the minimum retention force related to a cap with minimum pin dimensions.

TESTING: After the gauge has been fully inserted into the lampholder, the force required to withdraw it shall be not less than 5N.

BUT: Vérification des douilles GR10q en ce qui concerne la force minimale de retenue dans le cas d'un culot à dimensions minimales des broches.

ESSAI: Après l'insertion complète du calibre dans la douille, la force nécessaire pour l'en extraire ne doit pas être inférieure à 5N.

Copyright National Electrical Manufacturers Association
Provided by IHS under license with NEMA
No reproduction or networking permitted without license from IHS
Not for Resale

"Go" Gauge for 2G11 Base

The drawing is intended only to illustrate the essential dimensions of the gauge.

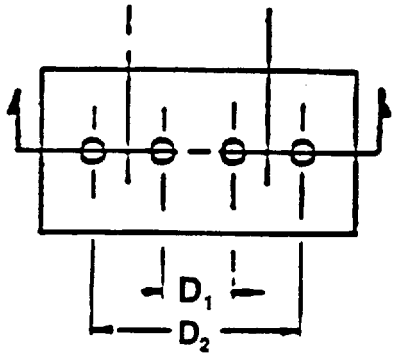

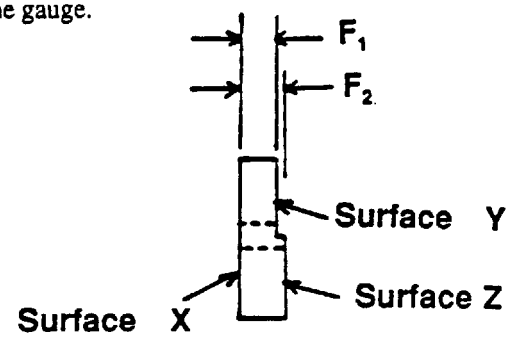

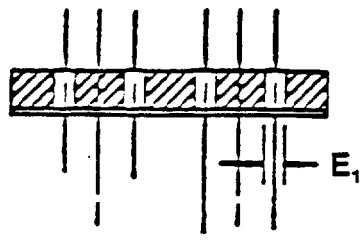

Reference	Dimensions (millimeters)	Tolerance (millimeters)
D_1	11.000	±0.005
D_2	33.000	±0.005
E_1	2.90	+0.01
F_1	16.000	-0.025
F_2	6.800	+0.025

Purpose
To check base 2G11 of Sheet 1-393 for combined spacing displacement, misalignment, diameter and length of pins.

Testing
Attempt to insert a lamp base into the gauge until the reference plane of the base is in contact with surface X of the gauge and check the relationship of the pin ends with regard to gauge surfaces Y and Z.

Copyright National Electrical Manufacturers Association
Provided by IHS under license with NEMA
No reproduction or networking permitted without license from IHS
Not for Resale

Gauge A for Maximum Insertion and Withdrawal Force for 2G11 Lampholder

ANSI C81.63a-1993
Std Sheet 3-396-2

The drawing is intended only to illustrate the essential dimensions of the gauge.

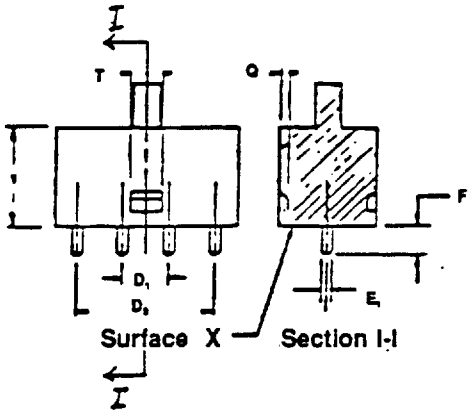

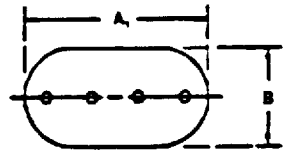

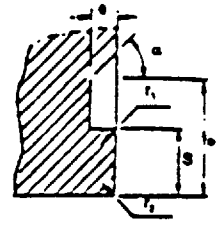

Reference	Dimensions (millimeters)	Tolerance (millimeters)
A_1	44.2	-0.02
B	23.9	-0.02
D_1	11.26	+0.01
D_2	33.26	+0.01
E_1	2.67	-0.01
F	6.80	-0.025
N	6.50	-0.05
Q	1.50	-0.02
S	3.90	+0.02
T	6.00	+0.05
Y	12.500	±0.1
r_1	0.30	±0.05
r_2	0.20	±0.05
α	45°	±30 min.

NOTES:
(1) Ends of pins are hemispherical in shape. Pins should be of hardened shell.
(2) Surface finish: 0.4 μm for the pins.

Purpose

To check 2G11 lampholders of Standard Sheet 2-393 for maximum insertion and withdrawal forces of a base with maximum pin diameter and length and maximum spacing.

Testing

Insert the pins of this gauge into the holes of the holder until surface X is in contact with surface X of the holder. Measure the appropriate insertion force, axial or lateral, depending upon the type of holder under test.

Withdraw the gauge in the appropriate manner, axially or laterally, while measuring the force. Also, measure the withdrawal force of the gauge from the seated position in an axial-lateral type holder, with axial motion only.

Compare the measured values to the specified limits in ANSI C81.62-1991, Standard Sheet 2-393.

Copyright National Electrical Manufacturers Association
Provided by IHS under license with NEMA
No reproduction or networking permitted without license from IHS
Not for Resale

Gauge B for Maximum Insertion Force for 2G11 Lampholder

The drawing is intended to illustrate the essential dimensions of the gauge.

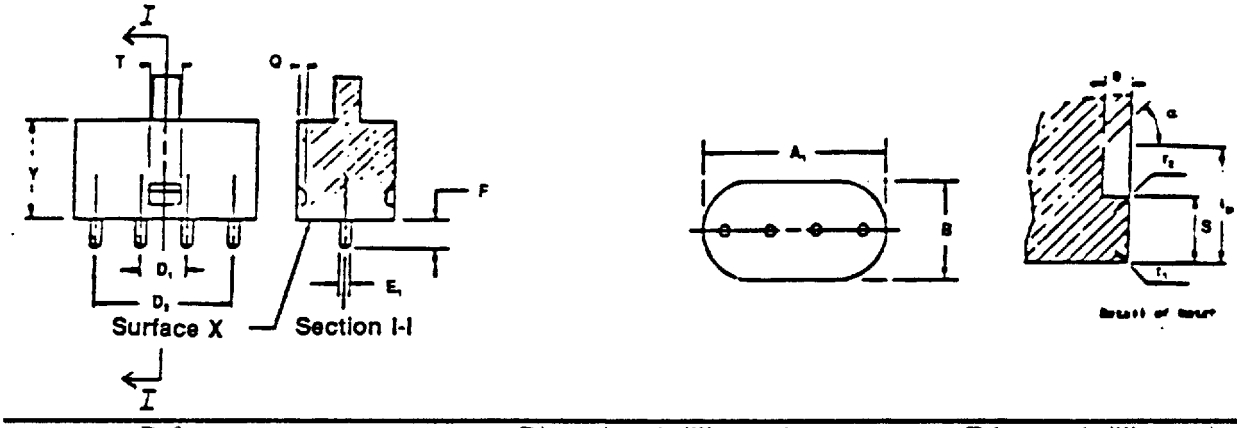

Reference	Dimensions (millimeters)	Tolerance (millimeters)
A_1	44.2	-0.02
B	23.9	-0.02
D_1	10.74	-0.01
D_2	32.74	-0.01
E_1	2.67	-0.01
F	6.80	-0.025
N	6.5	-0.05
Q	1.5	-0.02
S	3.9	+0.02
T	6.0	+0.05
Y	12.5	±0.1
r_1	0.3	±0.05
r_2	0.2	±0.05
α	45°	±30 min.

NOTES:
(1) Ends of pins are hemispherical in shape. Pins should be of hardened steel.
(2) Surface finish: 0.4 μm for the pins.

Purpose

To check 2G11 lampholders of Sheet 2-393 for maximum insertion force for a base with maximum pin dimensions and minimum spacing.

Testing

Insert the pins of this gauge into the holes of the holder until surface X is in contact with surface X of the holder. Measure the appropriate insertion force, axial or lateral, depending upon the type of holder under test.

Withdraw the gauge in the appropriate manner, axially or laterally, while measuring the force. Also, measure withdrawal force of the gauge from the seated position in an axial-lateral type holder, with axial motion only.

Compare the measured values to the specified limits; ANSI C81.62-1991, Standard Sheet 2-393.

Copyright National Electrical Manufacturers Association
Provided by IHS under license with NEMA
No reproduction or networking permitted without license from IHS
Not for Resale

Gauge C for Minimum Retention Force for 2G11 Lampholder

The drawing is intended only to illustrate the essential dimensions of the gauge.

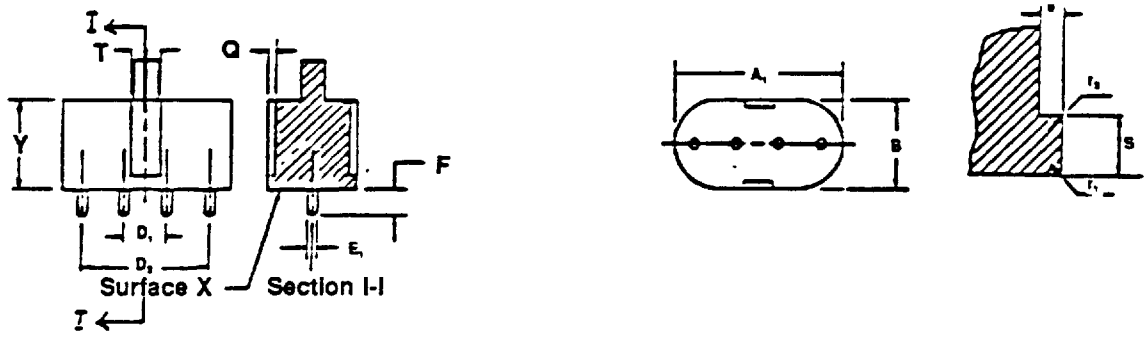

Reference	Dimensions (millimeters)	Tolerance (millimeters)
A_1	43.3	-0.02
B	23.2	-0.02
D_1	11.000	±0.005
D_2	33.0	±0.005
E_1	2.29	-0.01
F	6.00	-0.025
Q	2.0	+0.1
S	3.5	-0.02
T	7.0	+0.05
Y	12.5	±0.1
r_1	0.5	±0.05
r_2	0.5	±0.05

NOTES:
(1) Ends of pins are hemispherical in shape. Pins should be of hardened steel.
(2) Surface finish: 0. 4 μm for the pins.

Purpose

To check 2G11 lampholders of Sheet 2-393 for maximum retention force related to a base with minimum pin dimensions at nominal spacing.

Testing

Insert the gauge into the holder to the fully seated position, relative to the type of holder under test. Withdraw the gauge, in the appropriate manner, axially or laterally, while measuring the force.

Also, measure the withdrawal force from an axial-lateral type holder, with axial motion only.

Compare the measured values to the specified limits; ANSI C81.62-1991, Standard Sheet 2-393.

Copyright National Electrical Manufacturers Association
Provided by IHS under license with NEMA
No reproduction or networking permitted without license from IHS
Not for Resale

Single Pin Gauge D for Maximum Withdrawal Force on Contacts of 2G11 Lampholder

The drawing is intended only to indicate the essential dimensions of the gauge.

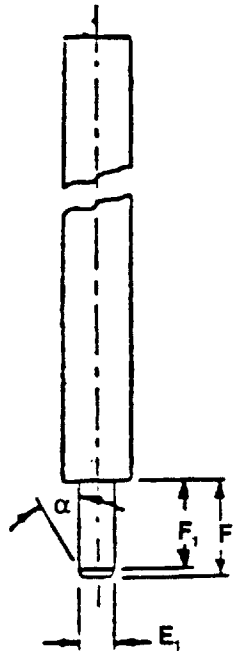

Reference	Dimensions (millimeters)	Tolerance (millimeters)
E_1	2.67	±0.01
F	6.80	±0.01
F_1	6.40	±9.05
α	30°	±1°

NOTES:
(1) Pins should be of hardened steel.
(2) Surface finish: 0.4 μm for the pins.

Purpose
To check 2G11 lampholders of Sheet 2-393 for maximum withdrawal force related to a maximum size base-pin in the individual contacts of the lampholder.

Testing
Insert this gauge into a hole of the holder to the fully seated position, relative to the type of holder under test. Withdraw the gauge, in the appropriate manner, while measuring the force.

This test shall be repeated on the other contacts.

Compare measured values to the limits specified in ANSI C81.62-1991, Standard Sheet 2-393.

Copyright National Electrical Manufacturers Association
Provided by IHS under license with NEMA
No reproduction or networking permitted without license from IHS
Not for Resale

Single Pin Gauge E for Minimum Withdrawal Force on Contacts of 2G11 Lampholder

The drawing is intended only to indicate the essential dimensions of the gauge.

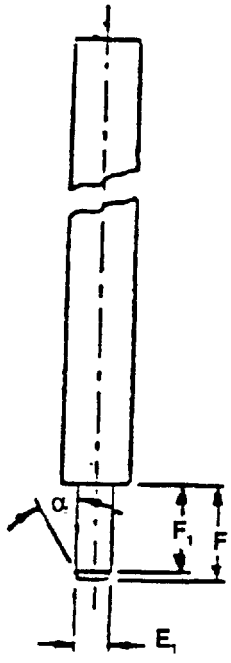

Reference	Dimensions (millimeters)	Tolerance (millimeters)
E_1	2.29	±0.01
F	6.0	±0.02
F_1	5.5	±0.05
α	30°	±1°

NOTES:
(1) Pins should be of hardened steel.
(2) Surface finish: 0.4 μm for the pins.

Purpose

To check 2G11 lampholders of Sheet 2-393 for minimum withdrawal force related to a minimum size base-pin in the individual contacts of the lampholder.

Testing

Insert this gauge into a hole of the holder to the fully seated position, relative to the type of holder under test. Measure the force necessary to withdraw the gauge in the appropriate manner. Also, test the withdrawal force of the gauge from the seated position in an axial-lateral type holder, with axial notion only.

This test shall be repeated on the other contacts.

Compare measured values to the limits specified in ANSI C81.62-1991, Standard Sheet 2-393.

Copyright National Electrical Manufacturers Association
Provided by IHS under license with NEMA
No reproduction or networking permitted without license from IHS
Not for Resale

PLUG GAUGE "B" FOR G12 LAMPHOLDERS

This drawing is intended only to illustrate the essential dimensions of the gauge.

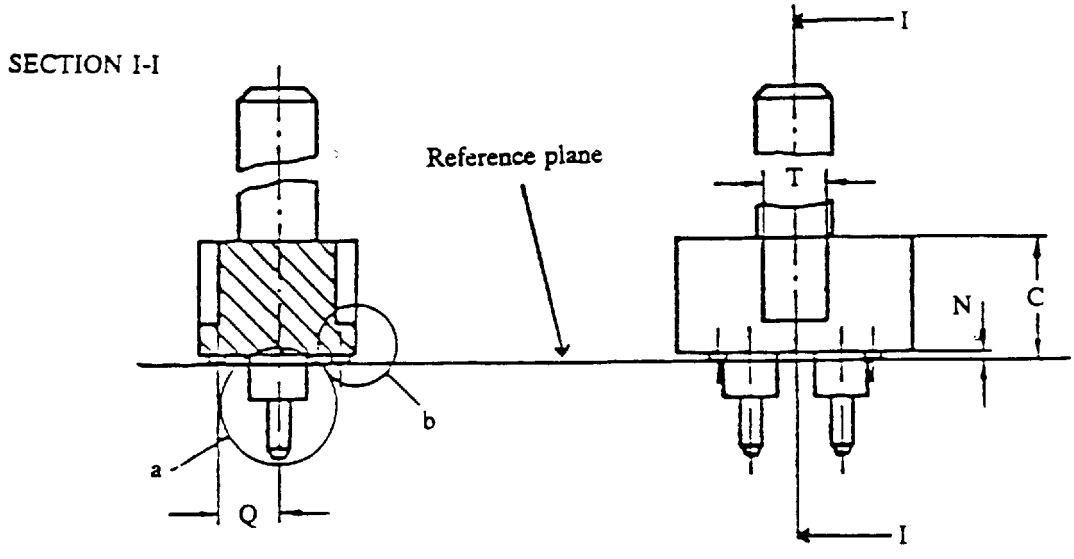

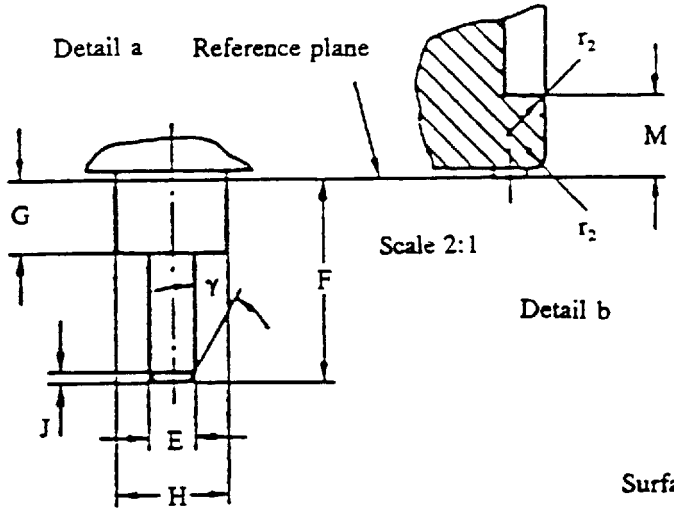

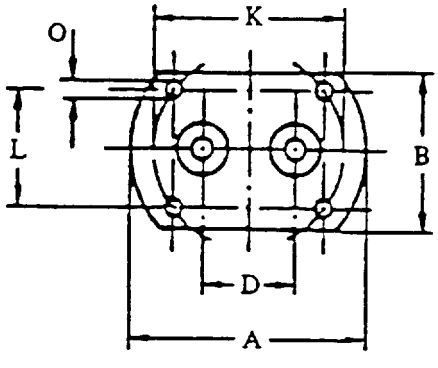

Surface finish 0.4 μm over length F.

Copyright National Electrical Manufacturers Association
Provided by IHS under license with NEMA
No reproduction or networking permitted without license from IHS
Not for Resale

Reference	Dimensions (millimeters)	Tolerance (millimeters)	Reference	Dimension (millimeters)	Tolerance (millimeters)
A	30.61	+0.02	L	15	+0.1 -0.1
B	19.51	+0.02	M	5.02	+0.02
C	14.5	+0.1	N	0.5	-0.05
D	11.865	-0.01	O	2	+0.1 -0.1
E	2.67	+0.01	Q	7.25	+0.02
F	12.53	+0.02	T	9.0	-0.02
G	4.53	+0.02	r_1	0.4	-0.05
H	6.98	+0.02	r_2	0.4	-0.05
J	0.4	-0.5	γ	30°	+30' -30'
K	25	+0.1			

PURPOSE

To check the maximum insertion force related to a base having maximum pin dimensions at minimum spacing.

For details of G12 lampholders, see ANSI C81.62 Standard Sheet 2-401.

TESTING

While measuring the force, insert the gauge into the lampholder until at least three of the supporting bosses of the gauge contact the face of the lampholder.

Copyright National Electrical Manufacturers Association
Provided by IHS under license with NEMA
No reproduction or networking permitted without license from IHS
Not for Resale

SINGLE PIN GAUGE "D" FOR CHECKING LAMPHOLDERS

CALIBRE A BROCHE SIMPLE "D" POUR LA VERIFICATION DES DOUILLES G12, PG12-. & PGX12-.

Dimensions in millimetres - Dimensions en millimètres

The drawing is intended only to illustrate the dimensions essential for interchangeability.
Le dessin a pour seul but d'illustrer les dimensions essentielles pour l'interchangeabilité.

For details of holders G12, PG12 and PGX12, see sheets 7005-63 and 7005-64 respectively.
Pour les détails des douilles G12, PG12 et PGX12, voir feuilles 7005-63 et 7005-64 respectivement.

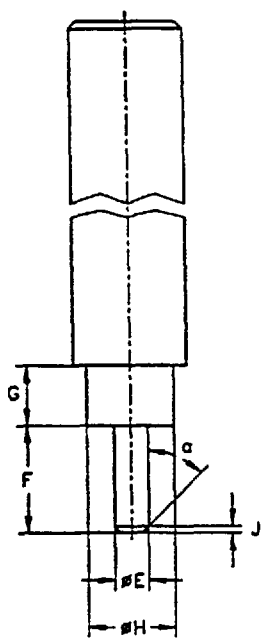

PURPOSE: To check the maximum withdrawal force related to maximum cap-pin dimensions in the individual contacts of lampholders G12, PG12 and PGX12.

TESTING: After the gauge has been fully inserted into one of the lampholder contacts, the force required to withdraw the gauge shall not exceed the value specified for this gauge on sheets 7005-63 and 7005-64 for holders G12 and for holders PG12 and PGX12 respectively.
The test shall be repeated on the other contact.

Reference	Dimension	Tolerance
E	2,67	+ 0,01 - 0,0
F	8,0	+ 0,05 - 0,05
G	4,5	+ 0,0 - 0,1
H	6,7	+ 0,0 - 0,1
J	0,4	+ 0,05 - 0,05
α	30°	+ 1° - 1°

BUT: Vérification de la force maximale de retrait relative aux dimensions maximales des broches des culots dans les contacts individuels des douilles G12, PG12 et PGX12.

ESSAI: Après insertion totale du calibre dans l'un des contacts de la douille, la force nécessaire pour retirer le calibre ne doit pas excéder la valeur spécifiée pour ce calibre dans les feuilles 7005-63 et 7005-64 pour les douilles G12 et les douilles PG12 et PGX12 respectivement.
L'essai doit être répété avec l'autre contact.

Surface finish 0,4 μm over length F.
Finition 0,4 μm sur longueur F.

Copyright National Electrical Manufacturers Association
Provided by IHS under license with NEMA
No reproduction or networking permitted without license from IHS
Not for Resale

SINGLE PIN GAUGE "E" FOR CHECKING LAMPHOLDERS

CALIBRE A BROCHE SIMPLE "E" POUR LA VERIFICATION DES DOUILLES G12, PG12-. & PGX12-.

Dimensions in millimetres - Dimensions en millimètres

The drawing is intended only to illustrate the dimensions essential for interchangeability.
Le dessin a pour seul but d'illustrer les dimensions essentielles pour l'interchangeabilité.

For details of holders G12, PG12 and PGX12, see sheets 7005-63 and 7005-64 respectively.
Pour les détails des douilles G12, PG12 et PGX12, voir feuilles 7005-63 et 7005-64 respectivement.

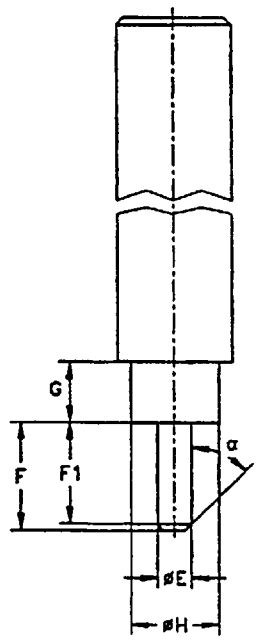

PURPOSE: To check the minimum retention force related to minimum cap-pin dimensions in the individual contacts of lampholders G12, PG12 and PGX12.

TESTING: After the gauge has been fully inserted into one of the lampholder contacts, the force required to withdraw the gauge shall be not less than the value specified for this gauge on sheets 7005-63 and 7005-64 for holders G12 and for holders PG12 and PGX12 respectively.
The test shall be repeated on the other contact.

Reference	Dimension	Tolerance
E	2,29	+ 0,0 - 0,01
F	7,0	+ 0,05 - 0,05
F1	6,6	+ 0,05 - 0,05
G	4,5	+ 0,0 - 0,1
H	6,7	+ 0,0 - 0,1
α	30°	+ 1° - 1°

BUT: Vérification de la force de retention minimale relative aux dimensions minimales des broches des culots dans les contacts individuels des douilles G12, PG12 et PGX12.

ESSAI: Après insertion totale du calibre dans l'un des contacts de la douille, la force nécessaire pour retirer le calibre ne doit pas être inférieure à la valeur spécifiée pour ce calibre dans les feuilles 7005-63 et 7005-64 pour les douilles G12 et les douilles PG12 et PGX12 respectivement.
L'essai doit être répété avec l'autre contact.

Surface finish 0,4 μm over length F.
Finition 0,4 μm sur longueur F.

Copyright National Electrical Manufacturers Association
Provided by IHS under license with NEMA
No reproduction or networking permitted without license from IHS
Not for Resale

"GO" AND "NOT GO" GAUGES FOR CAPS ON FINISHED LAMPS

CALIBRES "ENTRE" ET "N'ENTRE PAS" POUR CULOTS SUR LAMPES TERMINEES

PG12-. & PGX12-.

Dimensions in millimetres - Dimensions en millimètres

The drawing is intended only to illustrate the dimensions essential for interchangeability.
Le dessin a pour seul but d'illustrer les dimensions essentielles pour l'interchangeabilité.

For details of caps PG12 and PGX12, see sheet 7004-64.
Pour les détails des culots PG12 et PGX12, voir feuille 7004-64.

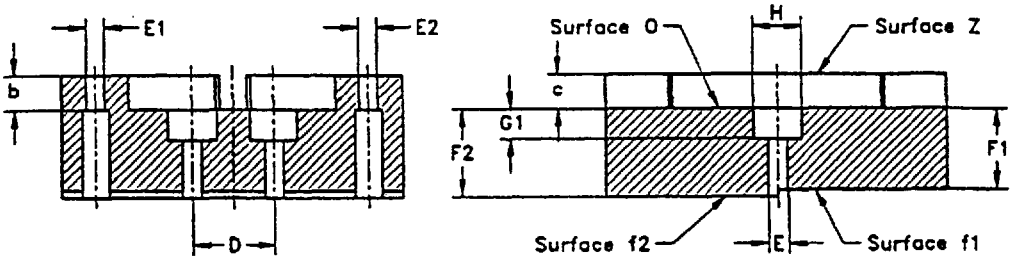

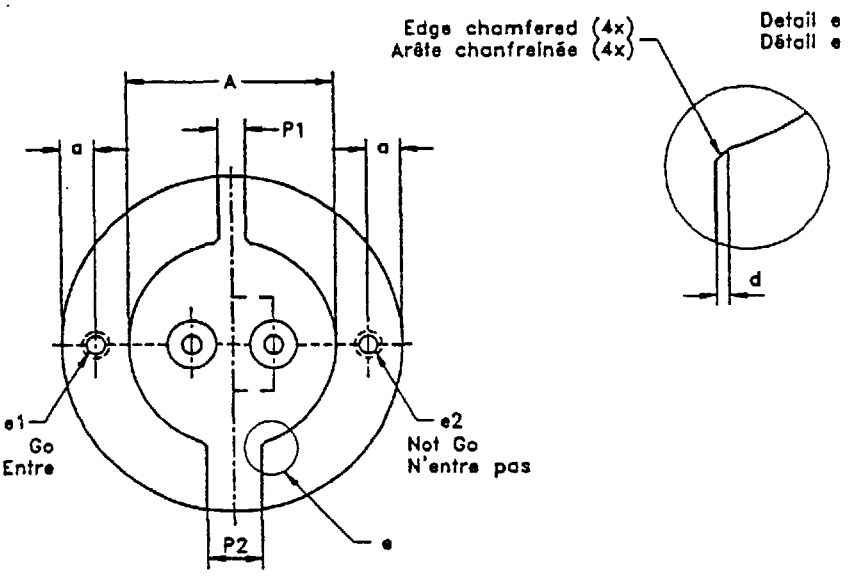

For the gauges for checking PG12-2 and PGX12-2 caps the hole e1 shall be situated within an angle of approximately 45° above or below the horizontal centre line.
Only the gauge for checking caps PG12-1 is shown.
For the gauges for checking caps PG12-2, PG12-3, PGX12-1 and PGX12-2 see the appropriate drawings on page 2/3.
All other dimensions are the same as for PG12-1 gauges.

Pour les calibres de vérification des culots PG12-2 et PGX12-2, le trou e1 doit être situé dans un angle d'approximativement 45° au-dessus ou en dessous de la ligne horizontale des centres.
Seul le calibre pour la vérification des culots PG12-1 est représenté.
Pour les calibres de vérification des culots PG12-2, PG12-3, PGX12-1 et PGX12-2, voir les dessins appropriés en page 2/3.
Toutes les autres dimensions sont celles des calibres pour PG12-1.

Copyright National Electrical Manufacturers Association
Provided by IHS under license with NEMA
No reproduction or networking permitted without license from IHS
Not for Resale

"GO" AND "NOT GO" GAUGES FOR CAPS ON FINISHED LAMPS

CALIBRES "ENTRE" ET "N'ENTRE PAS" POUR CULOTS SUR LAMPES TERMINEES

PG12-. & PGX12-.

Dimensions in millimetres - Dimensions en millimètres

DESIGN TYPES

PG12-1

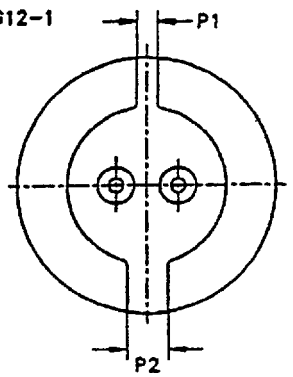

PG12-2

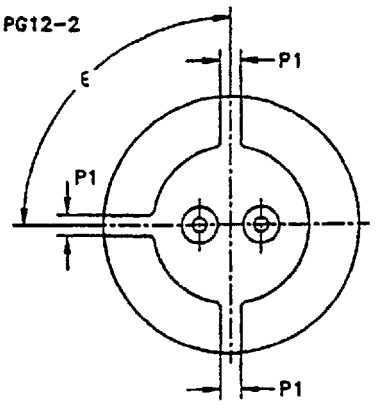

PG12-3

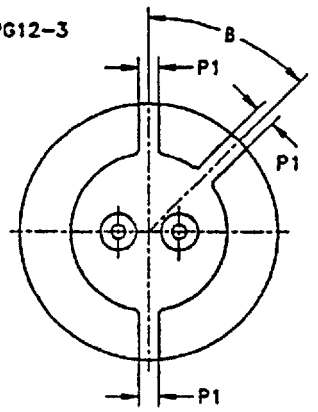

PGX12-1

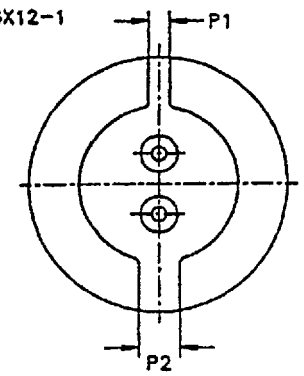

PGX12-2

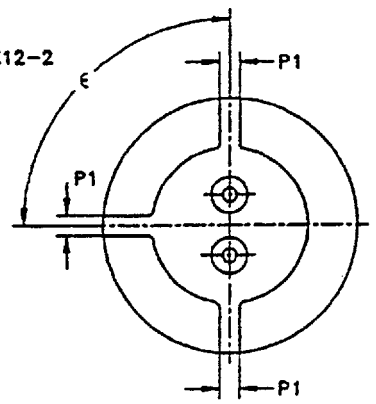

Reference	Dimension	Tolerance
A	30,6	+ 0,01 - 0,0
D	12,0	+ 0,005 - 0,005
E	2,79	+ 0,01 - 0,0
E1	2,67	+ 0,01 - 0,0
E2	2,29	+ 0,0 - 0,01
F1	11,4	+ 0,0 - 0,025
F2	12,5	+ 0,025 - 0,0
G1	4,5	+ 0,025 - 0,0
H	7,1	+ 0,01 - 0,0

Reference	Dimension	Tolerance
P1	4,0	+ 0,02 - 0,0
P2	7,9	+ 0,02 - 0,0
a	5	+ 0,2 - 0,2
b	5	+ 0,5 - 0,5
c	5	+ 0,5 - 0,5
d	0,6	+ 0,1 - 0,0
ß	45°	+ 5' - 5'
ε	90°	+ 5' - 5'

Copyright National Electrical Manufacturers Association
Provided by IHS under license with NEMA
No reproduction or networking permitted without license from IHS
Not for Resale

"GO" AND "NOT GO" GAUGES FOR CAPS ON FINISHED LAMPS

CALIBRES "ENTRE" ET "N'ENTRE PAS" POUR CULOTS SUR LAMPES TERMINEES
PG12-. & PGX12-.

Dimensions in millimetres - Dimensions en millimètres

PURPOSE: To check the maximum cap-outline with respect to dimension Amax, the combined displacement and diameter of the pins and the bosses of the pins, the diametrical position and width of the lugs with references P1 and P2 related to dimension A and the dimensions Emin, Emax, Fmin and Fmax of the individual pins.

TESTING: The cap shall enter the appropriate gauge at surface Z with the reference lug entering the small notch of the gauge (only applicable to PG12-1 and PGX12-1 caps) until the reference plane of the cap is in contact with surface 0 of the gauge.
In this position the ends of the pins shall be coplanar with, or project beyond, surface f1, but they shall not project beyond surface f2.
It shall also be possible to insert each pin in turn into hole e1 until the boss of the pin is in contact with surface Z.
It shall not be possible to insert the pins, other than the extreme tips, into hole e2.

BUT: Vérification de l'encombrement maximal par rapport à la dimension Amax, l'effet combiné du déplacement et du diamètre des broches et du bossage des broches, la largeur des languettes et leur position diamétrale par rapport à P1 et P2 reliés à la dimension A et les dimensions Emin, Emax, Fmin et Fmax des broches individuelles.

ESSAI: La chemise du culot doit entrer dans le calibre approprié par la surface Z avec la languette de référence entrant dans la petite encoche du calibre (seulement pour culots PG12-1 et PGX12-1) jusqu'à ce que le plan de référence du culot soit en contact avec la surface 0 du calibre.
Dans cette position, les extrémités des broches doivent être coplanaires avec la surface f1 ou être en saillie par rapport à celle-ci, mais elles ne doivent pas émerger de la surface f2.
Il doit aussi être possible de faire entrer chacune à son tour les broches dans le trou e1 jusqu'à ce que le bossage de la broche soit en contact avec la surface Z.
Il ne doit pas être possible de faire entrer les broches, au-delà de leur pointe extrême, dans le trou e2.

Copyright National Electrical Manufacturers Association
Provided by IHS under license with NEMA
No reproduction or networking permitted without license from IHS
Not for Resale

PLUG GAUGES "A" FOR CHECKING LAMPHOLDERS

CALIBRES "A" POUR LA VERIFICATION DES DOUILLES

PG12-. & PGX12-.

Dimensions in millimetres - Dimensions en millimètres

The drawing is intended only to illustrate the dimensions essential for interchangeability.
Le dessin a pour seul but d'illustrer les dimensions essentielles pour l'interchangeabilité.

For details of holders PG12 and PGX12, see sheet 7005-64.
Pour les détails des douilles PG12 et PGX12, voir feuille 7005-64.

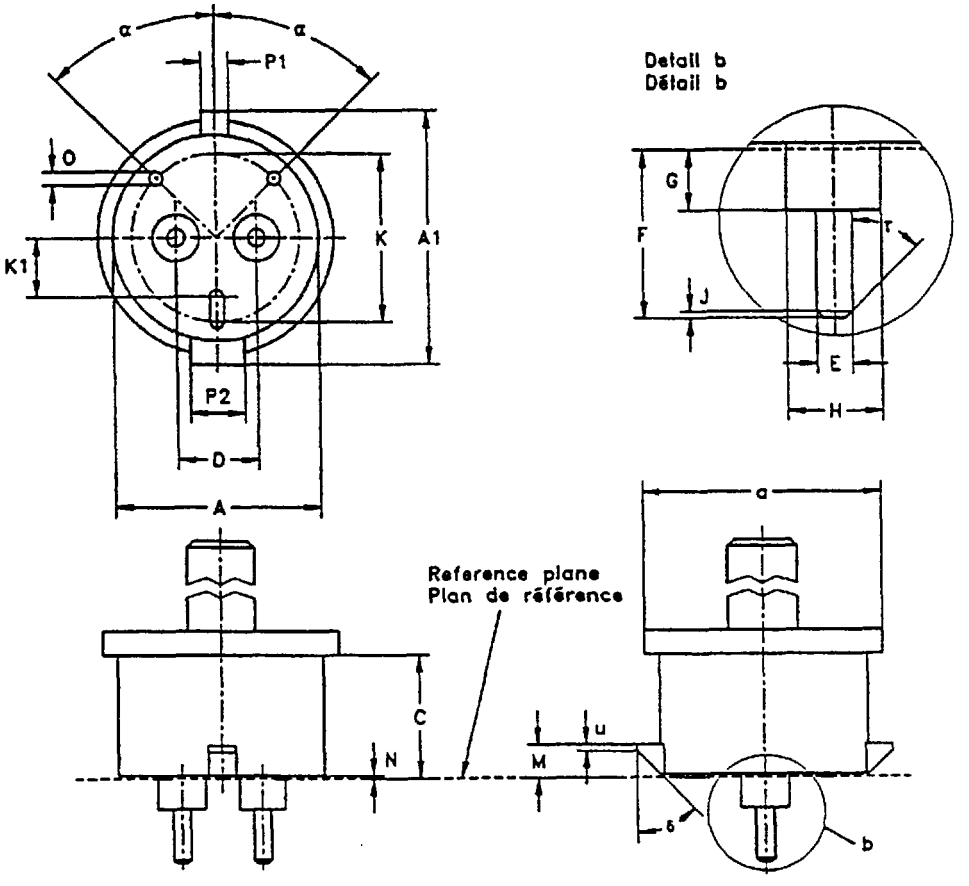

Only the gauge for checking lampholders PG12-1 is shown.
For gauges for checking lampholders PG12-2, PG12-3, PGX12-1 and PGX12-2 see the appropriate drawings on page 2/3. All other dimensions are the same as for PG12-1 gauges.
Surface finish of the pins 0,4 μm.

Seul le calibre pour la vérification des douilles PG12-1 est représenté.
Pour les calibres de vérification des douilles PG12-2, PG12-3, PGX12-1 et PGX12-2, voir les dessins appropriés en page 2/3. Toutes les autres dimensions sont celles des calibres pour PG12-1.
Finition 0,4 μm pour les ergots.

Copyright National Electrical Manufacturers Association
Provided by IHS under license with NEMA
No reproduction or networking permitted without license from IHS
Not for Resale

PLUG GAUGES "A" FOR CHECKING LAMPHOLDERS

CALIBRES "A" POUR LA VERIFICATION DES DOUILLES

PG12-. & PGX12-.

Dimensions in millimetres - Dimensions en millimètres

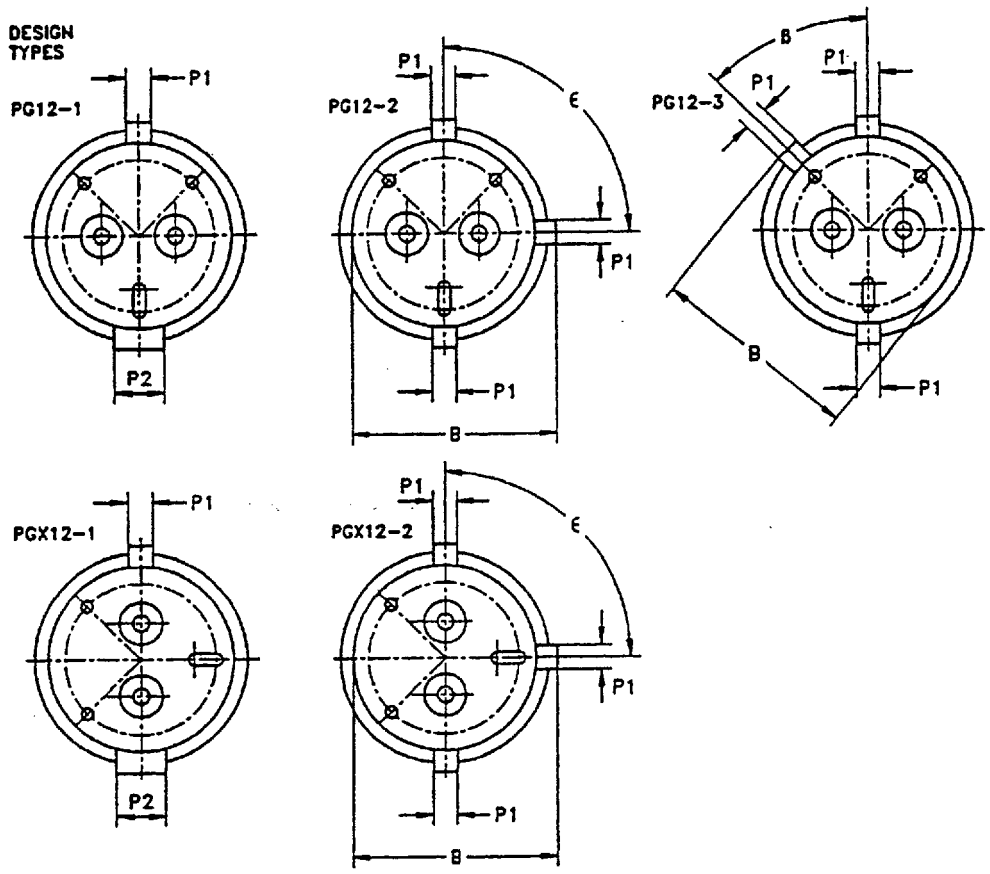

Reference	Dimension	Tolerance
A	30,61	+ 0,02 - 0,0
A1	37,62	+ 0,02 - 0,0
B	34,12	+ 0,02 - 0,0
C	18,0	+ 0,05 - 0,0
D	12,135	+ 0,01 - 0,0
E	2,67	+ 0,01 - 0,0
F	12,53	+ 0,02 - 0,0
G	4,53	+ 0,02 - 0,0
H	6,98	+ 0,02 - 0,0
J	0,4	+ 0,0 - 0,05
K	25	+ 0,1 - 0,1
K1	8,8	+ 0,1 - 0,1

Reference	Dimension	Tolerance
M	5,02	+ 0,02 - 0,0
N	0,5	+ 0,0 - 0,05
O	2	+ 0,1 - 0,1
P1	4,02	+ 0,02 - 0,0
P2	7,92	+ 0,02 - 0,0
s	35	+ 0,5 - 0,5
u	1,0	+ 0,05 - 0,0
α	45°	+ 1° - 1°
ß	45°	+ 5' - 5'
δ	45°	+ 0 - 1°
ϵ	90°	+ 5' - 5'
τ	30°	+ 30' - 30'

Copyright National Electrical Manufacturers Association
Provided by IHS under license with NEMA
No reproduction or networking permitted without license from IHS
Not for Resale

PLUG GAUGES "A" FOR CHECKING LAMPHOLDERS

CALIBRES "A" POUR LA VERIFICATION DES DOUILLES

PG12-. & PGX12-.

Dimensions in millimetres - Dimensions en millimètres

PURPOSE: To check dimensions Amin, A1min, P1min, P2min, Hmin and Gmin and the maximum insertion and withdrawal forces specified on sheet 7005-64 related to a maximum cap as regards pin dimensions at maximum spacing, and dimension A1max specified on sheet 7004-64.

TESTING: It shall be possible to insert the appropriate gauge into the lampholder with a force not exceeding the maximum insertion force, specified for this gauge on sheet 7005-64 until the supporting bosses of the gauge contact the face of the lampholder.
In this position there shall be noticeable clearance between the rim of the lampholder and surface C of the gauge.
After this test it shall be possible to withdraw the gauge with a force not exceeding the maximum withdrawal force specified for this gauge on sheet 7005-64.

BUT: Vérification des dimensions Amin, A1min, P1min, P2min, Hmin et Gmin et les forces maximales d'insertion et de retrait spécifiées dans la feuille 7005-64 d'un culot maximal en ce qui concerne les dimensions des broches situées à l'espacement maximal, et la dimension A1max spécifiée dans la feuille 7004-64.

ESSAI: Il doit être possible d'insérer le calibre approprié dans la douille avec une force n'excédant pas la force d'insertion maximale spécifiée pour ce calibre dans la feuille 7005-64, jusqu'à ce que les bossages supports du calibre entrent en contact avec la face de la douille.
Dans cette position, il doit exister un jeu sensible entre le bord de la douille et la surface C du calibre.
Après exécution de cet essai, il doit être possible de retirer le calibre avec une force n'excédant pas la force de retrait maximale spécifiée pour ce calibre dans la feuille 7005-64.

Copyright National Electrical Manufacturers Association
Provided by IHS under license with NEMA
No reproduction or networking permitted without license from IHS
Not for Resale

PLUG GAUGES "B" FOR CHECKING LAMPHOLDERS

CALIBRES "B" POUR LA VERIFICATION DES DOUILLES

PG12-. & PGX12-.

Dimensions in millimetres - Dimensions en millimètres

The drawing is intended only to illustrate the dimensions essential for interchangeability.
Le dessin a pour seul but d'illustrer les dimensions essentielles pour l'interchangeabilité.

For details of holders PG12 and PGX12, see sheet 7005-64.
Pour les détails des douilles PG12 et PGX12, voir feuille 7005-64.

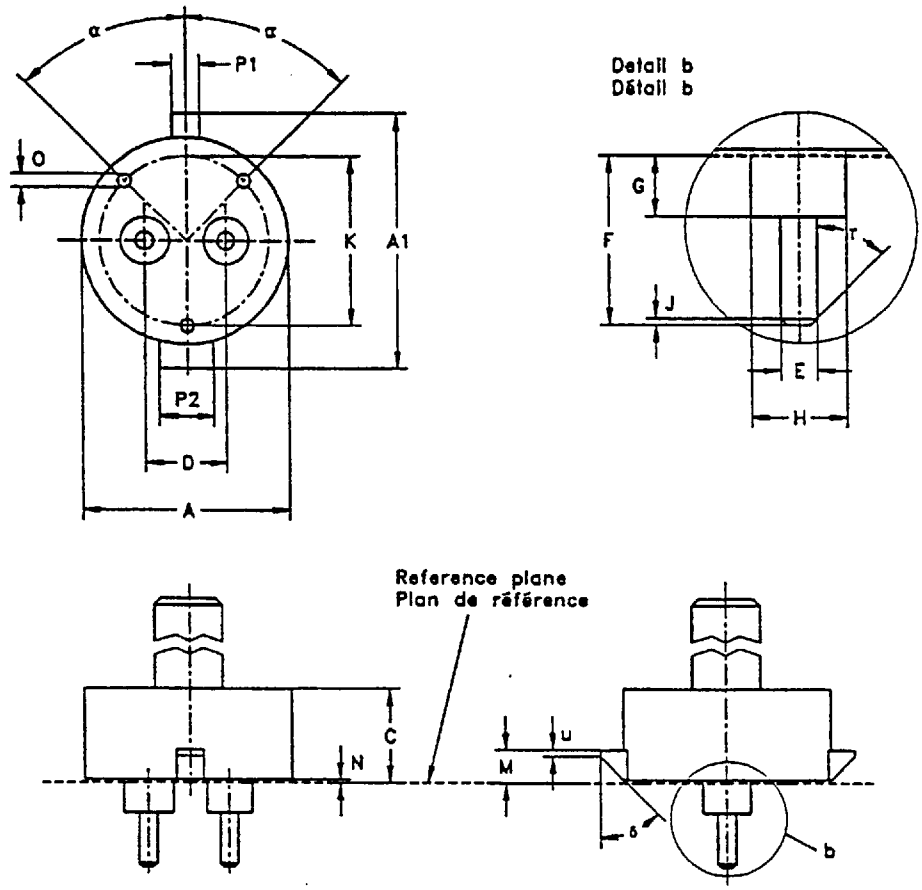

Only the gauge for checking lampholders PG12-1 is shown.
For gauges for checking lampholders PG12-2, PG12-3, PGX12-1 and PGX12-2 see the appropriate drawings on page 2/3. All other dimensions are the same as for PG12-1 gauges.
Surface finish of the pins 0,4 μm.

Seul le calibre pour la vérification des douilles PG12-1 est représenté.
Pour les calibres de vérification des douilles PG12-2, PG12-3, PGX12-1 et PGX12-2, voir les dessins appropriés en page 2/3. Toutes les autres dimensions sont celles des calibres pour PG12-1.
Finition 0,4 μm pour les ergots.

Copyright National Electrical Manufacturers Association
Provided by IHS under license with NEMA
No reproduction or networking permitted without license from IHS
Not for Resale

PLUG GAUGES "B" FOR CHECKING LAMPHOLDERS

CALIBRES "B" POUR LA VERIFICATION DES DOUILLES

PG12-. & PGX12-.

Dimensions in millimetres - Dimensions en millimètres

DESIGN TYPES

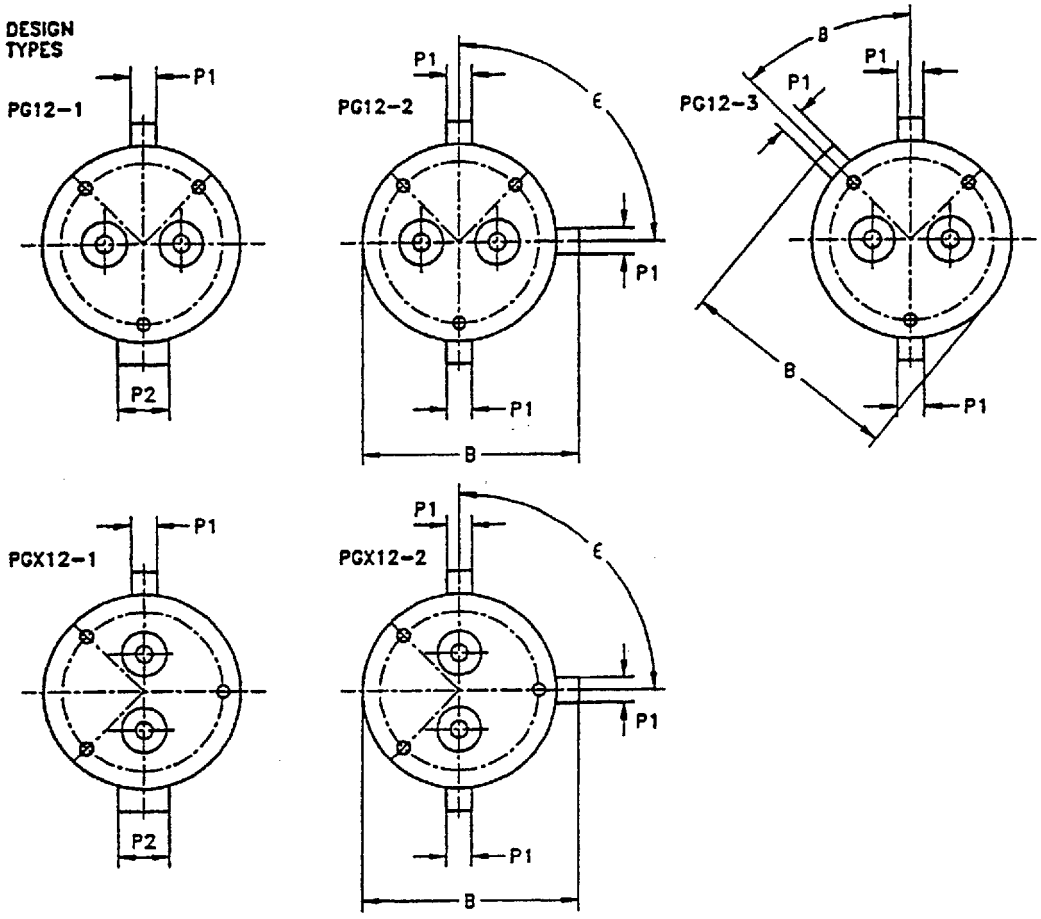

Reference	Dimension	Tolerance
A	30,61	+ 0,02 - 0,0
A1	37,62	+ 0,02 - 0,0
B	34,12	+ 0,02 - 0,0
C	14	+ 0,2 - 0,2
D	11,865	+ 0,0 - 0,01
E	2,67	+ 0,01 - 0,0
F	12,53	+ 0,02 - 0,0
G	4,53	+ 0,02 - 0,0
H	6,98	+ 0,02 - 0,0
J	0,4	+ 0,0 - 0,05
K	25	+ 0,1 - 0,1

Reference	Dimension	Tolerance
M	5,02	+ 0,02 - 0,0
N	0,5	+ 0,0 - 0,05
O	2	+ 0,1 - 0,1
P1	4,02	+ 0,02 - 0,0
P2	7,92	+ 0,02 - 0,0
u	1,0	+ 0,05 - 0,0
α	45°	+ 1° - 1°
ß	45°	+ 5' - 5'
δ	45°	+ 0 - 1°
ϵ	90°	+ 5' - 5'
τ	30°	+ 30' - 30'

Copyright National Electrical Manufacturers Association
Provided by IHS under license with NEMA
No reproduction or networking permitted without license from IHS
Not for Resale

PLUG GAUGES "B" FOR CHECKING LAMPHOLDERS

CALIBRES "B" POUR LA VERIFICATION DES DOUILLES

PG12-. & PGX12-.

Dimensions in millimetres - Dimensions en millimètres

PURPOSE: To check the maximum insertion force specified on sheet 7005-64 related to a maximum cap as regards pin dimensions at minimum spacing and dimension A1max.

TESTING: It shall be possible to insert the appropriate gauge into the lampholder with a force not exceeding the maximum insertion force, specified for this gauge on sheet 7005-64, until the supporting bosses of the gauge contact the face of the lampholder.

BUT: Vérification de la force d'insertion maximale spécifiée dans la feuille 7005-64 relative au culot maximal en ce qui concerne les dimensions de broches ayant l'espacement minimal et la dimension A1max.

ESSAI: Il doit être possible d'insérer le calibre approprié dans la douille avec une force n'excédant pas la force d'insertion maximale spécifiée pour ce calibre dans la feuille 7005-64, jusqu'à ce que les bossages supports du calibre entrent en contact avec la face de la douille.

Copyright National Electrical Manufacturers Association
Provided by IHS under license with NEMA
No reproduction or networking permitted without license from IHS
Not for Resale

PLUG GAUGES "C" FOR CHECKING LAMPHOLDERS

CALIBRES "C" POUR LA VERIFICATION DES DOUILLES

PG12-. & PGX12-.

Dimensions in millimetres - Dimensions en millimètres

The drawing is intended only to illustrate the dimensions essential for interchangeability.
Le dessin a pour seul but d'illustrer les dimensions essentielles pour l'interchangeabilité.

For details of holders PG12 and PGX12, see sheet 7005-64.
Pour les détails des douilles PG12 et PGX12, voir feuille 7005-64.

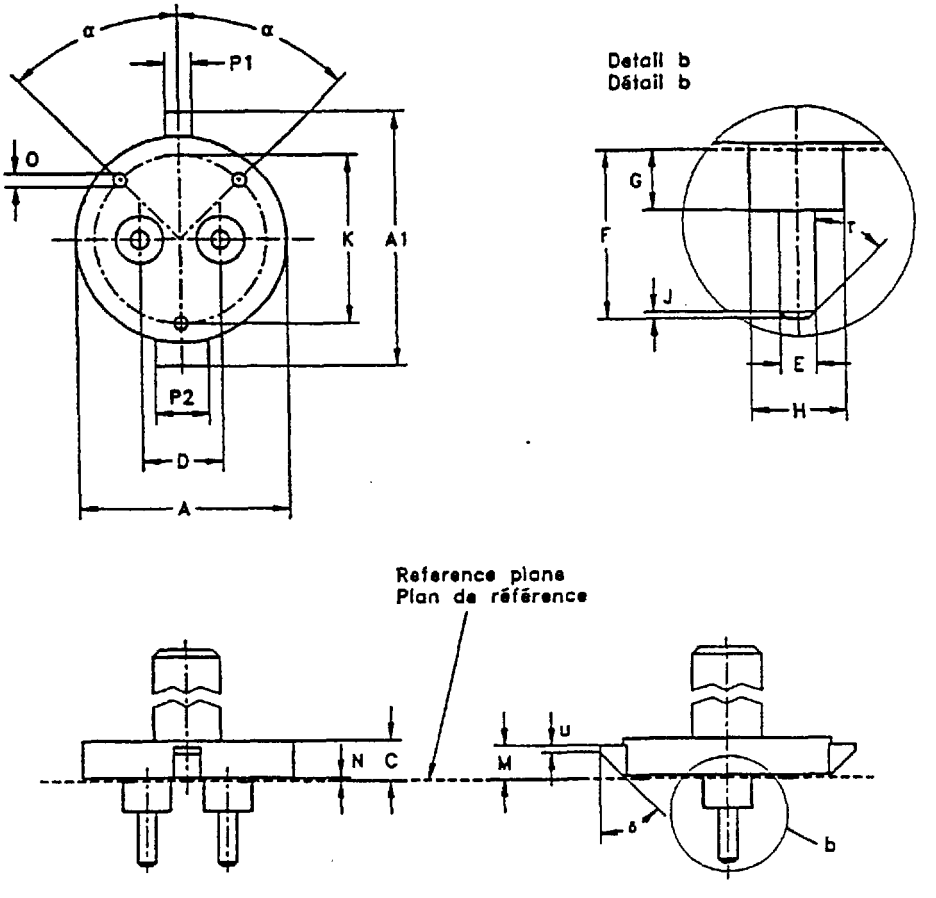

Only the gauge for checking lampholders PG12-1 is shown.
For gauges for checking lampholders PG12-2, PG12-3, PGX12-1 and PGX12-2 see the appropriate drawings on page 2/3. All other dimensions are the same as for PG12-1 gauges.
Surface finish of the pins 0,4 μm.

Seul le calibre pour la vérification des douilles PG12-1 est représenté.
Pour les calibres de vérification des douilles PG12-2, PG12-3, PGX12-1 et PGX12-2, voir les dessins appropriés en page 2/3. Toutes les autres dimensions sont celles des calibres pour PG12-1.
Finition 0,4 μm pour les ergots.

Copyright National Electrical Manufacturers Association
Provided by IHS under license with NEMA
No reproduction or networking permitted without license from IHS
Not for Resale

PLUG GAUGES "C" FOR CHECKING LAMPHOLDERS

CALIBRES "C" POUR LA VERIFICATION DES DOUILLES

PG12-. & PGX12-.

Dimensions in millimetres - Dimensions en millimètres

DESIGN TYPES

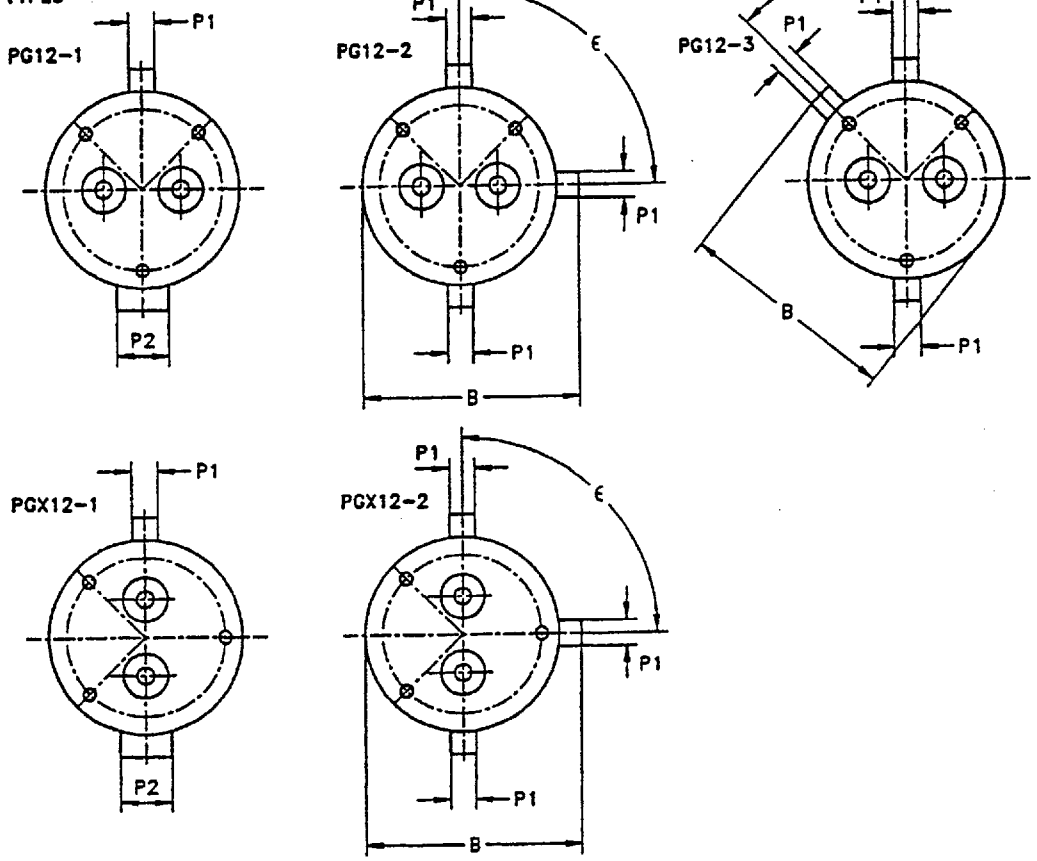

Reference	Dimension	Tolerance
A	29,4	+ 0,0 - 0,02
A1	36,4	+ 0,0 - 0,02
B	32,9	+ 0,0 - 0,02
C	6	+ 0,5 - 0,5
D	12,0	+ 0,005 - 0,005
E	2,29	+ 0,0 - 0,01
F	11,4	+ 0,0 - 0,01
G	3,0	+ 0,05 - 0,0
H	6,2	+ 0,0 - 0,05
J	0,4	+ 0,1 - 0,0
K	25	+ 0,1 - 0,1

Reference	Dimension	Tolerance
M	4,58	+ 0,0 - 0,02
N	0,5	+ 0,0 - 0,05
O	2	+ 0,1 - 0,1
P1	3,7	+ 0,0 - 0,05
P2	7,0	+ 0,0 - 0,05
u	0,5	+ 0,0 - 0,05
α	45°	+ 30' - 30'
ß	45°	+ 5' - 5'
δ	40°	+ 30' - 30'
ϵ	90°	+ 5' - 5'
τ	35°	+ 30' - 30'

Copyright National Electrical Manufacturers Association
Provided by IHS under license with NEMA
No reproduction or networking permitted without license from IHS
Not for Resale

PLUG GAUGES "C" FOR CHECKING LAMPHOLDERS

CALIBRES "C" POUR LA VERIFICATION DES DOUILLES

PG12-. & PGX12-.

Dimensions in millimetres - Dimensions en millimètres

PURPOSE: To check the minimum retention force related to a minimum cap as regards pin dimensions at nominal spacing and minimum contour dimensions.

TESTING: It shall be possible to insert the appropriate gauge into the lampholder until the supporting bosses of the gauge contact the face of the lampholder.
The force required to withdraw the gauge shall be not less than the value specified for this gauge on sheet 7005-64.

NOTE - The lampholders shall accept gauge C in one way only.

BUT: Vérification de la force de rétention minimale relative au culot minimal en ce qui concerne les dimensions de broches situées à l'espacement nominal et l'encombrement minimal.

ESSAI: Il doit être possible d'insérer le calibre approprié dans la douille jusqu'à ce que les bossages supports du calibre entrent en contact avec la face de la douille.
La force requise pour retirer le calibre ne doit pas être inférieure à la valeur spécifiée pour ce calibre dans la feuille 7005-64.

NOTE - Les douilles doivent accepter le calibre C d'une seule manière.

Copyright National Electrical Manufacturers Association
Provided by IHS under license with NEMA
No reproduction or networking permitted without license from IHS
Not for Resale

PLUG GAUGES "F" FOR CHECKING CONTACT-MAKING IN LAMPHOLDERS
CALIBRES "F" POUR LA VERIFICATION DE LA REALITE DU CONTACT DANS LES DOUILLES
PG12-. & PGX12-.

Dimensions in millimetres - Dimensions en millimètres

The drawing is intended only to illustrate the dimensions essential for interchangeability.
Le dessin a pour seul but d'illustrer les dimensions essentielles pour l'interchangeabilité.

For details of holders PG12 and PGX12, see sheet 7005-64.
Pour les détails des douilles PG12 et PGX12, voir feuille 7005-64.

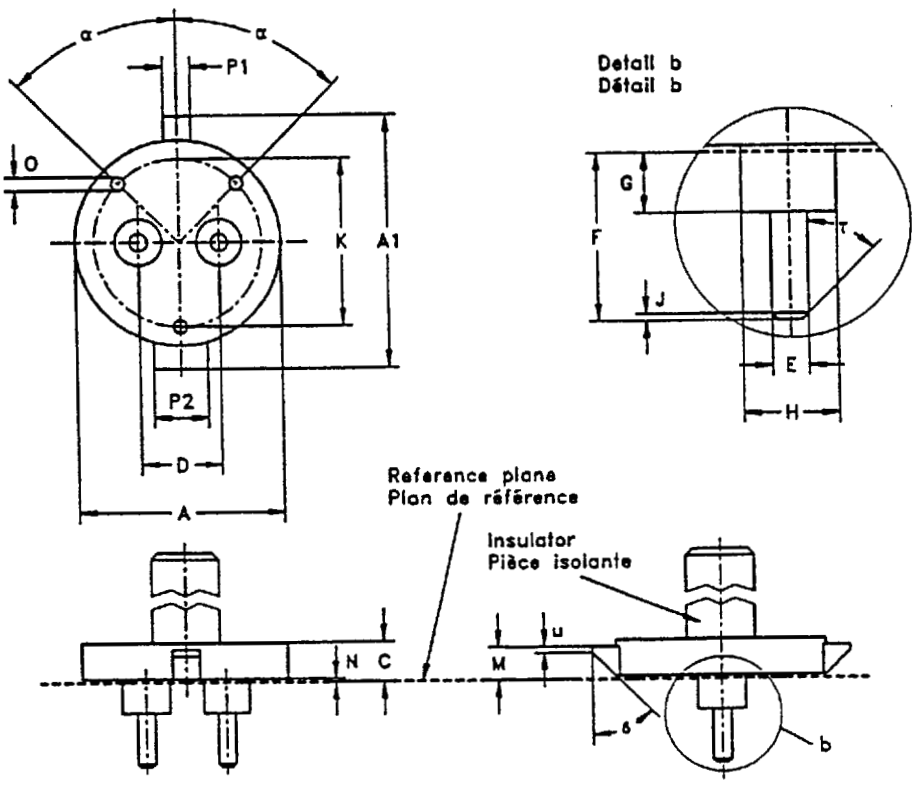

Test circuit - Circuit d'essai

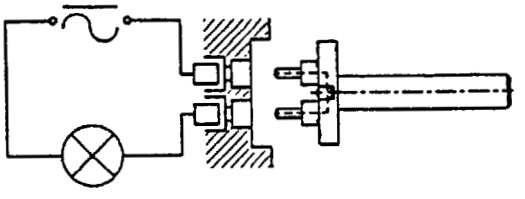

Only the gauge for checking lampholders PG12-1 is shown.
For gauges for checking lampholders PG12-2, PG12-3, PGX12-1 and PGX12-2 see the appropriate drawings on page 2/3. All other dimensions are the same as for PG12-1 gauges.
Surface finish of the pins 0,4 μm.

Seul le calibre pour la vérification des douilles PG12-1 est représenté.
Pour les calibres de vérification des douilles PG12-2, PG12-3, PGX12-1 et PGX12-2, voir les dessins appropriés en page 2/3. Toutes les autres dimensions sont celles des calibres pour PG12-1.
Finition 0,4 μm pour les ergots.

Copyright National Electrical Manufacturers Association
Provided by IHS under license with NEMA
No reproduction or networking permitted without license from IHS
Not for Resale

PLUG GAUGES "F" FOR CHECKING CONTACT-MAKING IN LAMPHOLDERS
CALIBRES "F" POUR LA VERIFICATION DE LA REALITE DU CONTACT DANS LES DOUILLES
PG12-. & PGX12-.

Dimensions in millimetres - Dimensions en millimètres

DESIGN TYPES

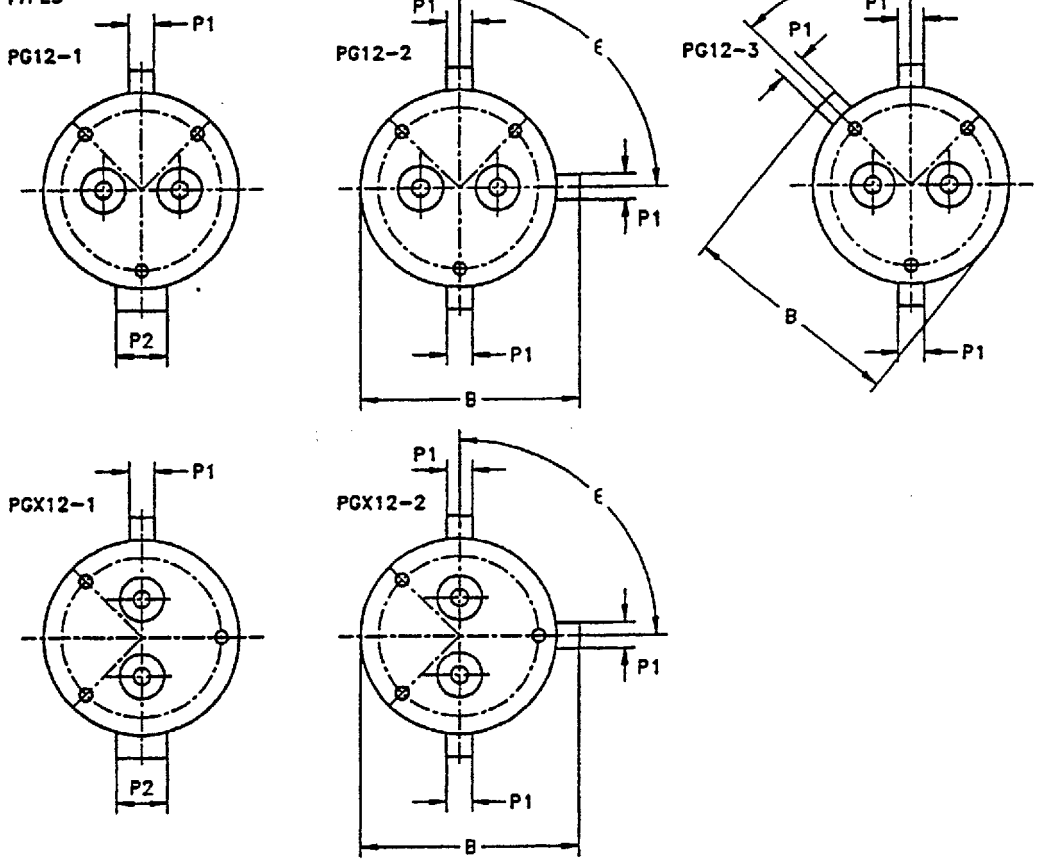

Reference	Dimension	Tolerance
A	29,4	+ 0,0 - 0,02
A1	36,4	+ 0,0 - 0,02
B	32,9	+ 0,0 - 0,02
C	6	+ 0,5 - 0,5
D	12,525	+ 0,005 - 0,005
E	2,29	+ 0,0 - 0,01
F	11,4	+ 0,0 - 0,01
G	3,0	+ 0,05 - 0,0
H	6,2	+ 0,0 - 0,05
J	0,4	+ 0,1 - 0,0
K	25	+ 0,1 - 0,1

Reference	Dimension	Tolerance
M	4,58	+ 0,0 - 0,02
N	0,5	+ 0,0 - 0,05
O	2	+ 0,1 - 0,1
P1	3,7	+ 0,0 - 0,05
P2	7,0	+ 0,0 - 0,05
u	0,5	+ 0,0 - 0,05
α	45°	+ 30' - 30'
ß	45°	+ 5' - 5'
δ	40°	+ 30' - 30'
ϵ	90°	+ 5' - 5'
τ	35°	+ 30' - 30'

Copyright National Electrical Manufacturers Association
Provided by IHS under license with NEMA
No reproduction or networking permitted without license from IHS
Not for Resale

PLUG GAUGES "F" FOR CHECKING CONTACT-MAKING IN LAMPHOLDERS
CALIBRES "F" POUR LA VERIFICATION DE LA REALITE DU CONTACT DANS LES DOUILLES
PG12-. & PGX12-.

Dimensions in millimetres - Dimensions en millimètres

PURPOSE: To check contact-making with a minimum cap as regards pin dimensions at maximum spacing in lampholders PG12-.. and PGX12-...

TESTING: It shall be possible to insert the gauge into the lampholder until it comes to abutment.
In this position the indicator lamp shall light.

BUT: Vérification de la réalité du contact de la douille PG12-.. et PGX12-.. avec un culot minimal en ce qui concerne les dimensions des broches à l'espacement maximal.

ESSAI: Il doit être possible d'insérer le calibre dans la douille jusqu'à ce qu'il arrive en butée.
Dans cette position, la lampe indicatrice doit s'allumer.

Copyright National Electrical Manufacturers Association
Provided by IHS under license with NEMA
No reproduction or networking permitted without license from IHS
Not for Resale

PLUG GAUGES "G" FOR CHECKING CONTACT-MAKING IN LAMPHOLDERS
CALIBRES "G" POUR LA VERIFICATION DE LA REALITE DU CONTACT DANS LES DOUILLES
PG12-. & PGX12-.

Dimensions in millimetres - Dimensions en millimètres

The drawing is intended only to illustrate the dimensions essential for interchangeability.
Le dessin a pour seul but d'illustrer les dimensions essentielles pour l'interchangeabilité.

For details of holders PG12 and PGX12, see sheet 7005-64.
Pour les détails des douilles PG12 et PGX12, voir feuille 7005-64.

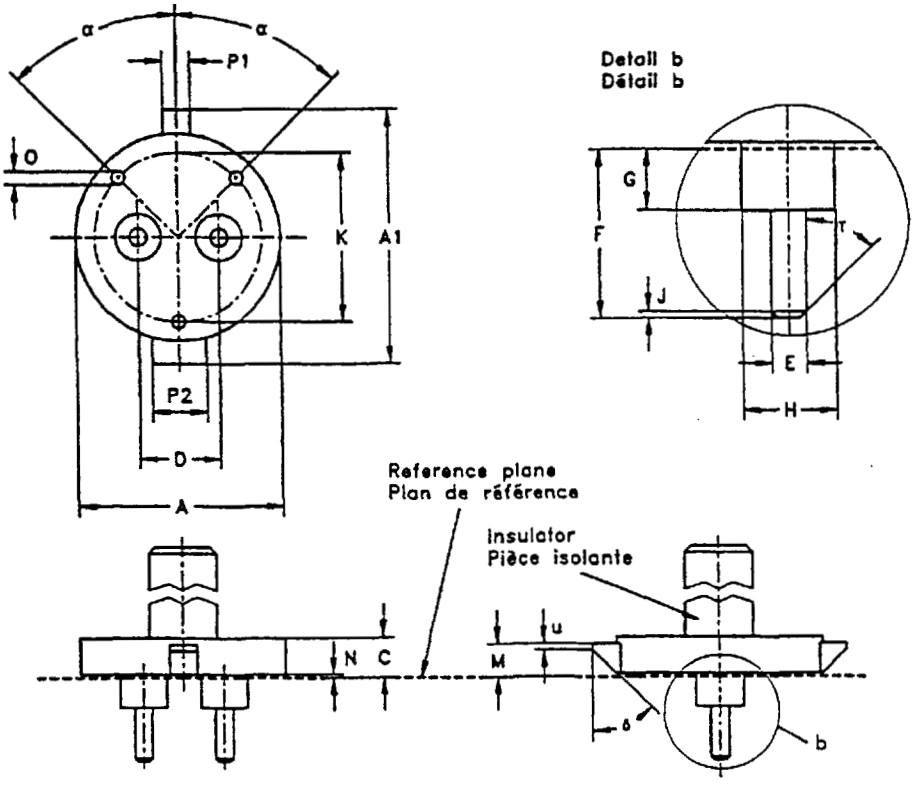

Test circuit – Circuit d'essai

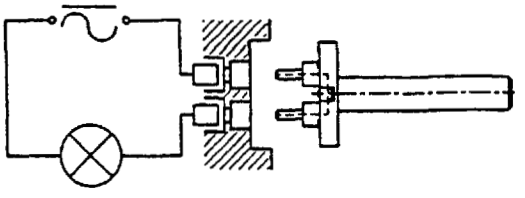

Only the gauge for checking lampholders PG12-1 is shown.
For gauges for checking lampholders PG12-2, PG12-3, PGX12-1 and PGX12-2 see the appropriate drawings on page 2/3. All other dimensions are the same as for PG12-1 gauges.
Surface finish of the pins 0,4 μm.

Seul le calibre pour la vérification des douilles PG12-1 est représenté.
Pour les calibres de vérification des douilles PG12-2, PG12-3, PGX12-1 et PGX12-2, voir les dessins appropriés en page 2/3. Toutes les autres dimensions sont celles des calibres pour PG12-1.
Finition 0,4 μm pour les ergots.

Copyright National Electrical Manufacturers Association
Provided by IHS under license with NEMA
No reproduction or networking permitted without license from IHS
Not for Resale

PLUG GAUGES "G" FOR CHECKING CONTACT-MAKING IN LAMPHOLDERS
CALIBRES "G" POUR LA VERIFICATION DE LA REALITE DU CONTACT DANS LES DOUILLES
PG12-. & PGX12-.

Dimensions in millimetres · Dimensions en millimètres

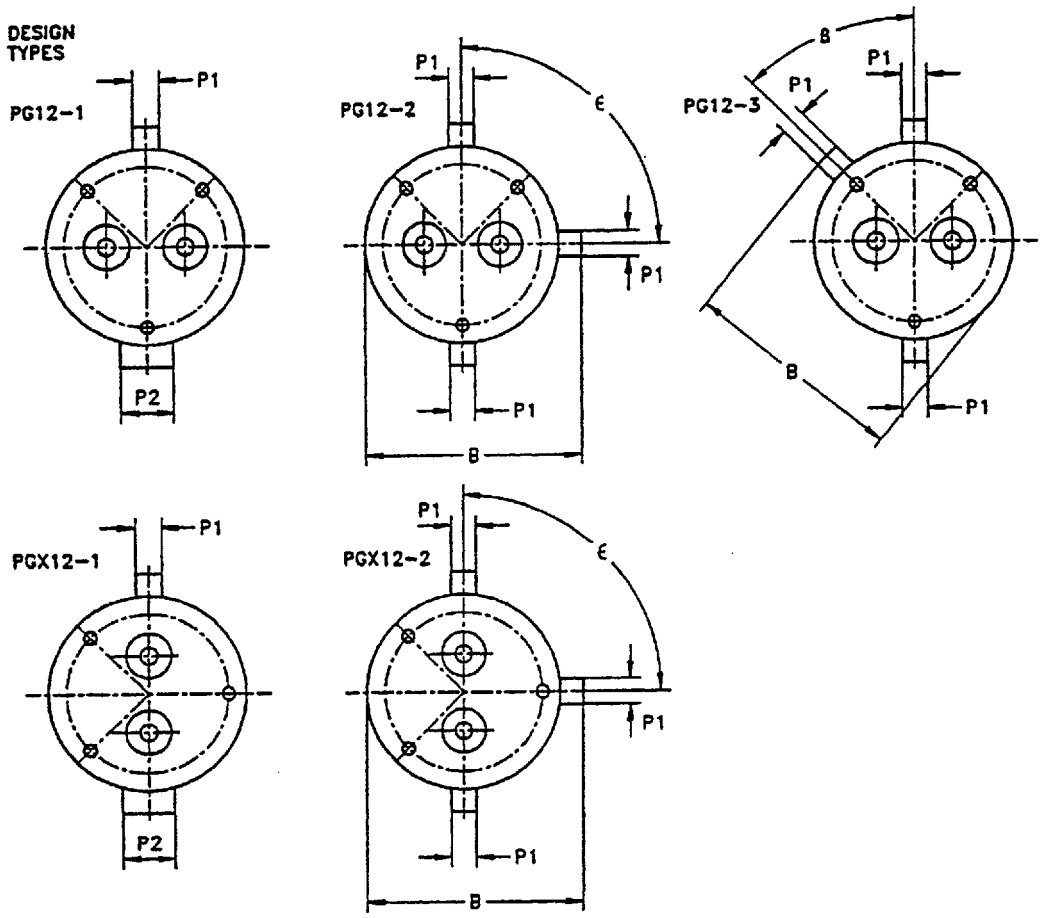

Reference	Dimension	Tolerance
A	29,4	+ 0,0 - 0,02
A1	36,4	+ 0,0 - 0,02
B	32,9	+ 0,0 - 0,02
C	6	+ 0,5 - 0,5
D	11,475	+ 0,005 - 0,005
E	2,29	+ 0,0 - 0,01
F	11,4	+ 0,0 - 0,01
G	3,0	+ 0,05 - 0,0
H	6,2	+ 0,0 - 0,05
J	0,4	+ 0,1 - 0,0
K	25	+ 0,1 - 0,1

Reference	Dimension	Tolerance
M	4,58	+ 0,0 - 0,02
N	0,5	+ 0,0 - 0,05
O	2	+ 0,1 - 0,1
P1	3,7	+ 0,0 - 0,05
P2	7,0	+ 0,0 - 0,05
u	0,5	+ 0,0 - 0,05
α	45°	+ 30' - 30'
ß	45°	+ 5' - 5'
δ	40°	+ 30' - 30'
ϵ	90°	+ 5' - 5'
τ	35°	+ 30' - 30'

Copyright National Electrical Manufacturers Association
Provided by IHS under license with NEMA
No reproduction or networking permitted without license from IHS
Not for Resale

PLUG GAUGES "G" FOR CHECKING CONTACT-MAKING IN LAMPHOLDERS
CALIBRES "G" POUR LA VERIFICATION DE LA REALITE DU CONTACT DANS LES DOUILLES
PG12-. & PGX12-.

Dimensions in millimetres - Dimensions en millimètres

PURPOSE: To check contact-making with a minimum cap as regards pin dimensions at minimum spacing in lampholders PG12-. and PGX12-..

TESTING: It shall be possible to insert the gauge into the lampholder until it comes to abutment.
In this position the indicator lamp shall light.

BUT: Vérification de la réalité du contact de la douille PG12-. et PGX12-. avec un culot minimal en ce qui concerne les dimensions des broches à l'espacement minimal.

ESSAI: Il doit être possible d'insérer le calibre dans la douille jusqu'à ce qu'il arrive en butée.
Dans cette position, la lampe indicatrice doit s'allumer.

Copyright National Electrical Manufacturers Association
Provided by IHS under license with NEMA
No reproduction or networking permitted without license from IHS
Not for Resale

"Go" and "Not-Go" Gauge for G13 Medium Bipin Bases on Finished Lamps

The drawing is intended only to illustrate the essential dimensions of the gauge.

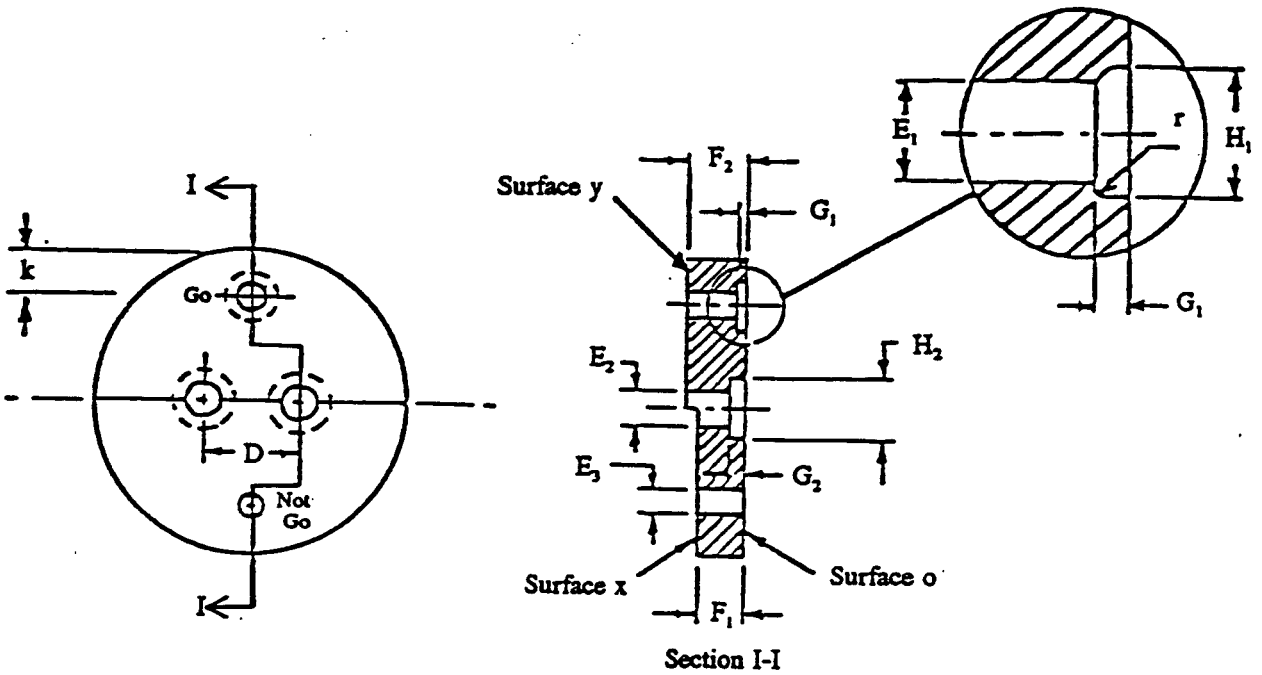

Section I-I

Reference	Dimension (inch)	Tolerance (inch)	Nearest Metric Equivalent (millimeters)
D	0.500	±0.0002	12.70
E_1	0.105	+0.0004	2.67
E_2	0.110	+0.0004	2.79
E_3	0.090	-0.0004	2.29
F_1 (Note)	0.250	-0.001	6.35
F_2	0.300	+0.001	7.62
G_1	0.034	+0.0004	0.86
G_2	0.039	+0.0005	1.0
H_1	0.130	+0.0005	3.30
H_2	0.157	+0.0004	0.38
r	0.015	-0.002	10
k	0.394	max.	

NOTE — 0.260 inch (6.60mm) is under consideration

Copyright National Electrical Manufacturers Association
Provided by IHS under license with NEMA
No reproduction or networking permitted without license from IHS
Not for Resale

Purpose

For the control of dimensions E_{min}, E_{max}, F_{min}, F_{max}, and the combined pin diameter and displacement of pins (including bosses) of G13 medium bipin bases.

For details of G13 Bases, see ANSI C81.61 Standard Sheet 1-406.

Testing

Insert the base pins into the two gauge holes, E2, at surface o until the base face and gauge are in contact. Check the relationship of the pins to surface x and surface y.

Insert each individual pin into hole E, at surface o, until the face of the base and the surface of the gauge are in contact.

Attempt to insert each pin into hole E3.

Copyright National Electrical Manufacturers Association
Provided by IHS under license with NEMA
No reproduction or networking permitted without license from IHS
Not for Resale

"Go" and "Not-Go" Gauge for Unmounted G5 and G13 Medium Bipin Bases

This gauge is not for use on finished lamps. For the appropriate gauge for finished lamps, see Standard Sheets 3-310 and 3-406.

The drawing is intended only to illustrate the essential dimensions of the gauge.

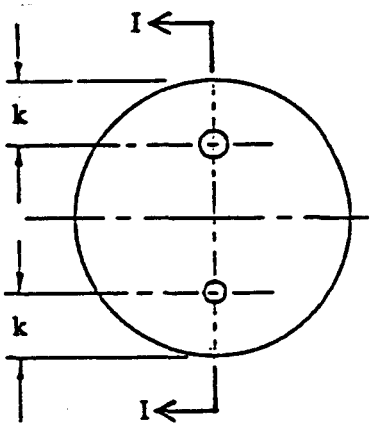

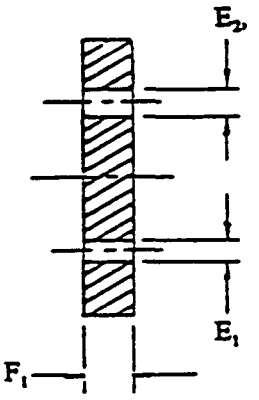

Section I-I

Reference	Dimension (inch)	Tolerance (inch)	Nearest Metric Equivalent (millimeters)
E_1	0.090	-0.0004	2.29
E_2	0.096	+0.0004	2.44
F_1	0.215	Approx.	5.46
k	0.118	Maximum	3.0

Purpose

To check the diameters of the cylindrical portions of the pins.

For details of bases, see ANSI C81.61, Standard Sheets 1-310 and 1-406

Testing

Insert each individual pin of an unmounted base fully into hole E_2 until the boss contacts the gauge. Attempt to insert each pin into hole E_1.

Copyright National Electrical Manufacturers Association
Provided by IHS under license with NEMA
No reproduction or networking permitted without license from IHS
Not for Resale

Pin Torsion Test Device for G13 Medium Bipin Bases

The drawing is intended only to illustrate the essential dimensions of the gauge.

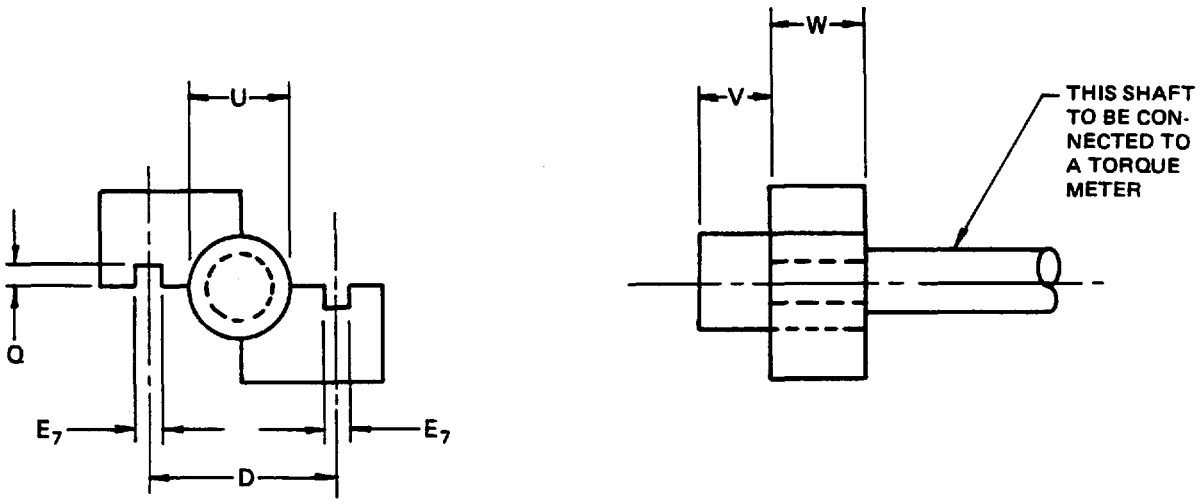

Reference	Dimension in	Tolerance in	Nearest metric equivalent mm
D	0.500	±0.001	12.70
E_7	0.120	±0.005	3.05
Q	0.050	±0.005	1.27
U (Note)	0.250	±0.010	6.35
V (Note)	0.180	±0.002	4.57
W	0.250	±0.010	6.35

NOTE – For base designs in which the space between pins is on a plane different than the base face plane, adjustment to dimensions V or U, or both, may be necessary.

Purpose
To provide a standard means of applying a torsion test to the contact pins.

For details of G13 bases, see ANSI C81.61, Standard Sheet 1-406.

Testing
With the test lamp in line with the axis of the shaft of the test device, insert the base pins into the E_7 grooves. Press the base face against the end of the spacer V to assure application of the test torque at the proper distance along the base pins.

Copyright National Electrical Manufacturers Association
Provided by IHS under license with NEMA
No reproduction or networking permitted without license from IHS
Not for Resale

Manually apply a rotational force to the lamp to force the pins into the E_7 grooves. Continue to apply torque to the lamp to reach the value specified on the base sheet on the torque meter and maintain that value for the specified time.

Copyright National Electrical Manufacturers Association
Provided by IHS under license with NEMA
No reproduction or networking permitted without license from IHS
Not for Resale

Torsion Test Device for G13 Medium Bipin Lampholders

In making test on individual inflexible (rigidly fixed) lampholders, as called for in ANSI C81.62, Standard Sheet 2-406, the torque or force is applied by means of test devices that simulate bases on finished lamps. Three similar test devices are required. They are referred to as Device A, Device B, and Device C; they differ only with respect to pin diameter and spacing. Device A simulates a base with maximum diameter pins at minimum spacing. Device B simulates minimum diameter pins at maximum spacing. Device C simulates minimum diameter pins at nominal spacing.

The drawing is intended only to illustrate the essential dimensions of the gauge.

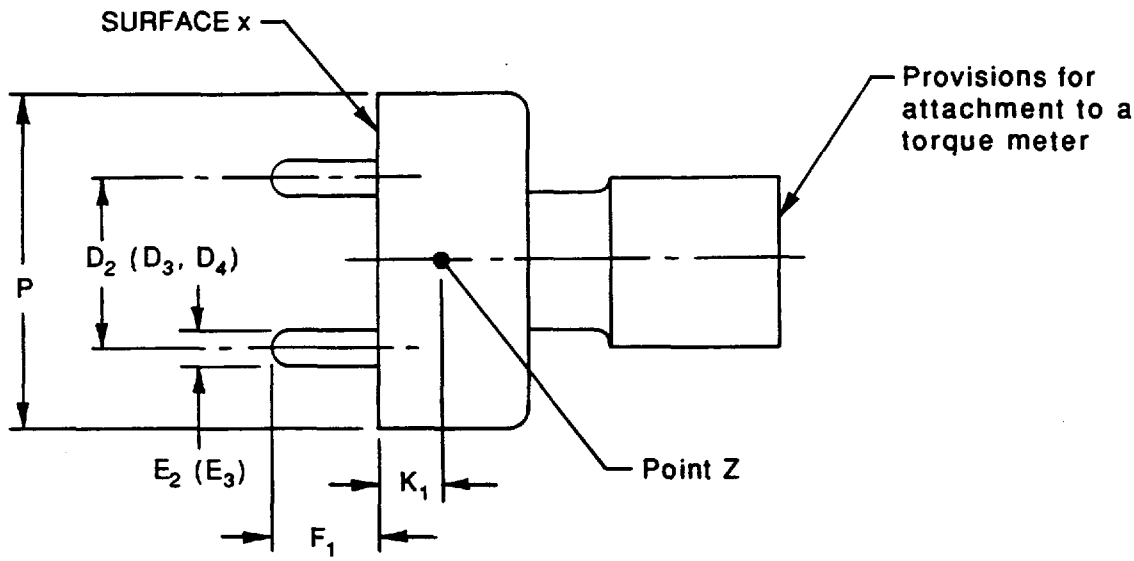

Copyright National Electrical Manufacturers Association
Provided by IHS under license with NEMA
No reproduction or networking permitted without license from IHS
Not for Resale

Reference	Dimension in			Tolerance in	Nearest metric equivalent mm
	Device A	Device B	Device C		
D_2	0.491	–	–	±0.0003	12.47
D_3	–	0.515 (Note 1)	–	±0.0003	13.08
D_4	–	–	0.500	±0.0003	12.70
E_2	0.096	–	–	–0.0004	2.44
E_3	–	0.090	0.090	+0.0004	2.29
F_1	0.240	0.240	0.240	+0.010	6.10
K_1	0.250	0.250	0.250	approx	6.35
P (Notes 2, 3)	1.00	1.00	1.00	approx	25.4

NOTES

1 Future objective: D_3 = 0.520 in (13.21 mm).

2 Point Z is located on the circumference, dimension P, in a place running along the axis of the device and perpendicular to the plane through the pins.

3 Provide means of attaching a pull scale at Point Z and the opposite side.

4 Pin ends shall be hemispherical in shape.

5 Pins shall be made of hardened steel.

Purpose

To provide a standard means of applying a torsion test to the lampholder contacts.

For detail of G13 lampholders, see ANSI C81.62, Standard Sheet 2-406.

Testing

a) *For rotational operation holders:*

1) Use Device A and Device B, in sequence, in each lampholder under test;

2) A calibrated torque meter is required for making this test, in addition to the test devices;

3) Insert the test device until surface x is in contact with the face of the holder. Torque may be applied to either the test device or the lampholder, the other being rigidly mounted. Maintain the test device in a position perpendicular to the holder face, during the test. Measurements shall be made during the insertion motion and withdrawal motion;

4) The readings shall comply with the appropriate limits for inflexible, rotational holders specified for the lampholder on ANSI C81.62, Standard Sheet 2-406.

Copyright National Electrical Manufacturers Association
Provided by IHS under license with NEMA
No reproduction or networking permitted without license from IHS
Not for Resale

b) *For lateral push-in holders:*

1) Each test device shall be used, in sequence, in each lampholder under test;

2) A calibrated pull scale is required for making this test, in addition to the test devices;

3) Place the test device in an initial position where surface x is in contact with the face of the holder. Pull the device by a pull scale into the final position in the locking detents of the contacts. Withdrawal is performed by pulling from the opposite side of the test device with the pull scale. Maintain the test device in a position perpendicular to the holder face, during the test. Measurements shall be made during both insertion and withdrawal;

4) The readings shall comply with the limits for inflexible, push-in holders specified for the lampholder on ANSI C81.62, Standard Sheet 2-406.

Copyright National Electrical Manufacturers Association
Provided by IHS under license with NEMA
No reproduction or networking permitted without license from IHS
Not for Resale

Double-Ended "Go" Gauges for a Combined Pair of G13 Medium Bipin Lampholders Mounted at Minimum Spacing

ANSI C81.63b-1994
Std. Sheet 3-417-2

The drawing is intended only to illustrate the essential dimensions of the gauge.

Two gauges, Gauge I and Gauge II, are required.

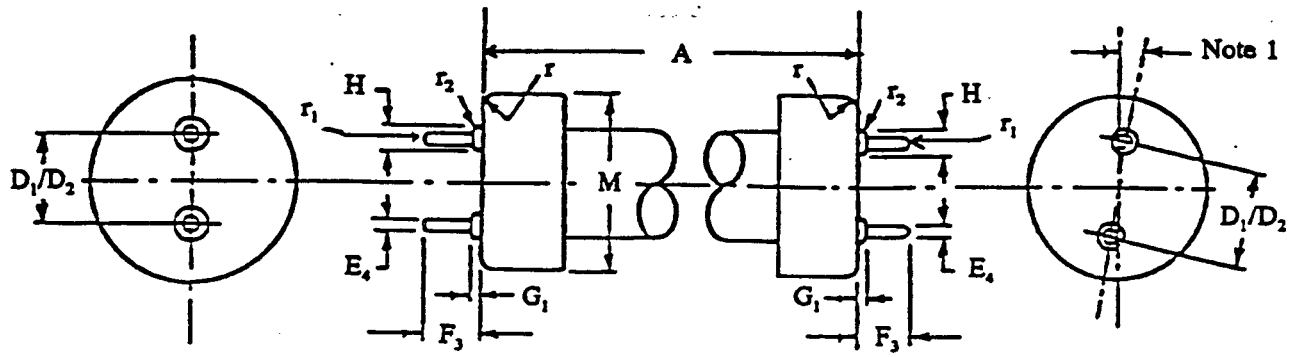

Gauge 1: Displacement

Reference	Dimension (inch)		Tolerance (inch)	Nearest Metric Equivalent (millimeters)
	Gauge I	Gauge II		
A (Note 2)	17.22	17.22	+0.002	437.4
D_1	0.490	—	-0.0004	12.45
D_2 (Note 3)	—	0.505	+0.0004	12.83
E_4	0.100	0.100	+0.0004	2.54
F_3	0.280	0.280	+0.0004	7.1
G_1	0.034	0.034	+0.0004	0.86
H	0.130	0.130	+0.0004	3.3
M	1.016	1.016	±0.004	25.8
r	0.020	0.020	±0.004	0.5
r_1	0.020	0.020	±0.001	0.5
r_2	0.015	0.015	-0.002	0.38

NOTES

1 The plane containing the axes of the pins at one end is displaced from true alignment with the plane containing the axes of the pins at the other end. Gauge I shall have clockwise displacement, as shown above, and Gauge II shall have counter-clockwise displacement. The angle of displacement shall be such that each gauge can just be inserted, without undue force, into two parallel slots, each 0.120 inch (3.05mm) in width.

2 For convenience, this value is equal to dimension $A_{maximum}$ of a 15-watt, 18-inch, T25 (T8) fluorescent lamp.

3 A future objective of 0.510 inch (12.95mm) is under consideration.

Copyright National Electrical Manufacturers Association
Provided by IHS under license with NEMA
No reproduction or networking permitted without license from IHS
Not for Resale

Purpose

To check a combined pair of flexible or inflexible G13 lampholders to ascertain that at the manufacturer's recommended minimum spacing they will accept a lamp of maximum length and with maximum rotational misalignment between the planes of the base pins at the two ends of the lamp.

For details of G13 lampholders, see ANSI C81.62, Standard Sheet 2-406.

Testing

Mount the pair of lampholders at the minimum distance according to the lampholder manufacturer's instructions. Insert and remove each gauge smoothly.

NOTE — When testing a combined pair of lampholders mounted in a luminaire, the value of dimension A shall be equal to dimension $A_{maximum}$ of the related lamps, with a tolerance of +0.002 inch (0.05mm).

Copyright National Electrical Manufacturers Association
Provided by IHS under license with NEMA
No reproduction or networking permitted without license from IHS
Not for Resale

Double-Ended Gauges for Testing Contact Making for a Combined Pair of G13 Medium Bipin Lampholders Mounted at Maximum Spacing

ANSI C81.63b-1994
Std. Sheet 3-418-2

This drawing is intended only to illustrate the essential dimensions of the gauge.

Three gauges are required, Gauges III, IV, and V.

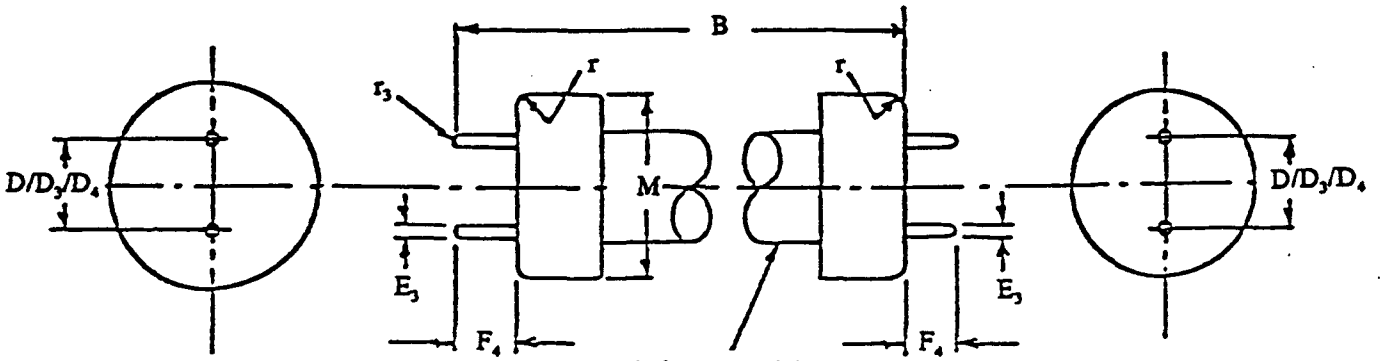

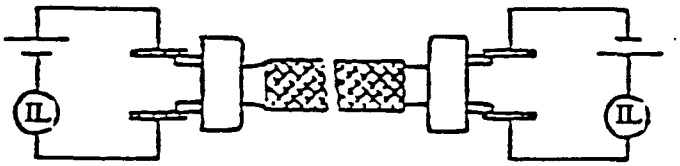

Test Circuit

Reference	Dimension (inch)			Tolerance (inch)	Nearest Metric Equivalent (millimeters)
	Gauge III	Gauge IV	Gauge V		
B (Note 1)	17.40	17.40	17.40	-0.002	442.0
D_3	0.480	—	—	-0.0004	12.20
D	—	0.500	—	±0.0002	12.70
D_4 (Note 2)	—	—	0.515	+0.0004	13.08
E_3	0.090	0.090	0.090	-0.004	2.29
F_4	0.260	0.260	0.260	-0.0004	6.6
M	1.016	1.016	1.016	±0.004	25.8
r	0.020	0.020	0.020	±0.004	0.5
r_3	0.016	0.016	0.016	±0.001	0.4
Mass	17.6oz	17.6oz	17.6oz	10%	0.5kg

NOTES

1 For convenience, this value is equal to dimension $B_{minimum}$, of a 15-watt, 18-inch T25 (T8) fluorescent ring.
2 A future objective of 0.520 inch (13.20mm) is under consideration.
3 Pins should be of hardened steel.

Copyright National Electrical Manufacturers Association
Provided by IHS under license with NEMA
No reproduction or networking permitted without license from IHS
Not for Resale

Purpose

To check a combined pair of flexible or inflexible G13 lampholders to ascertain that at their maximum permissible spacing, as recommended by the manufacturer, they will make contact with all four pins of a minimum length lamp.

For details of G13 lampholders, see ANSI C81.62, Standard Sheet 2-406.

Testing

Mount the pair of lampholders at the maximum distance according to the lampholder manufacturer's instruction. Insert each of the three gauges, in turn, while observing the indicator lamp (IL) of the test circuit.

NOTE — When testing a combined pair of lampholders in a luminaire the value of dimension B shall be equal to dimension $B_{minimum}$ of the related lamp, with a tolerance of -0.002 inch (-0.05mm).

Copyright National Electrical Manufacturers Association
Provided by IHS under license with NEMA
No reproduction or networking permitted without license from IHS
Not for Resale

"GO" GAUGES FOR 2G13 BASES

The drawing is intended only to illustrate the essential dimensions of the gauges.

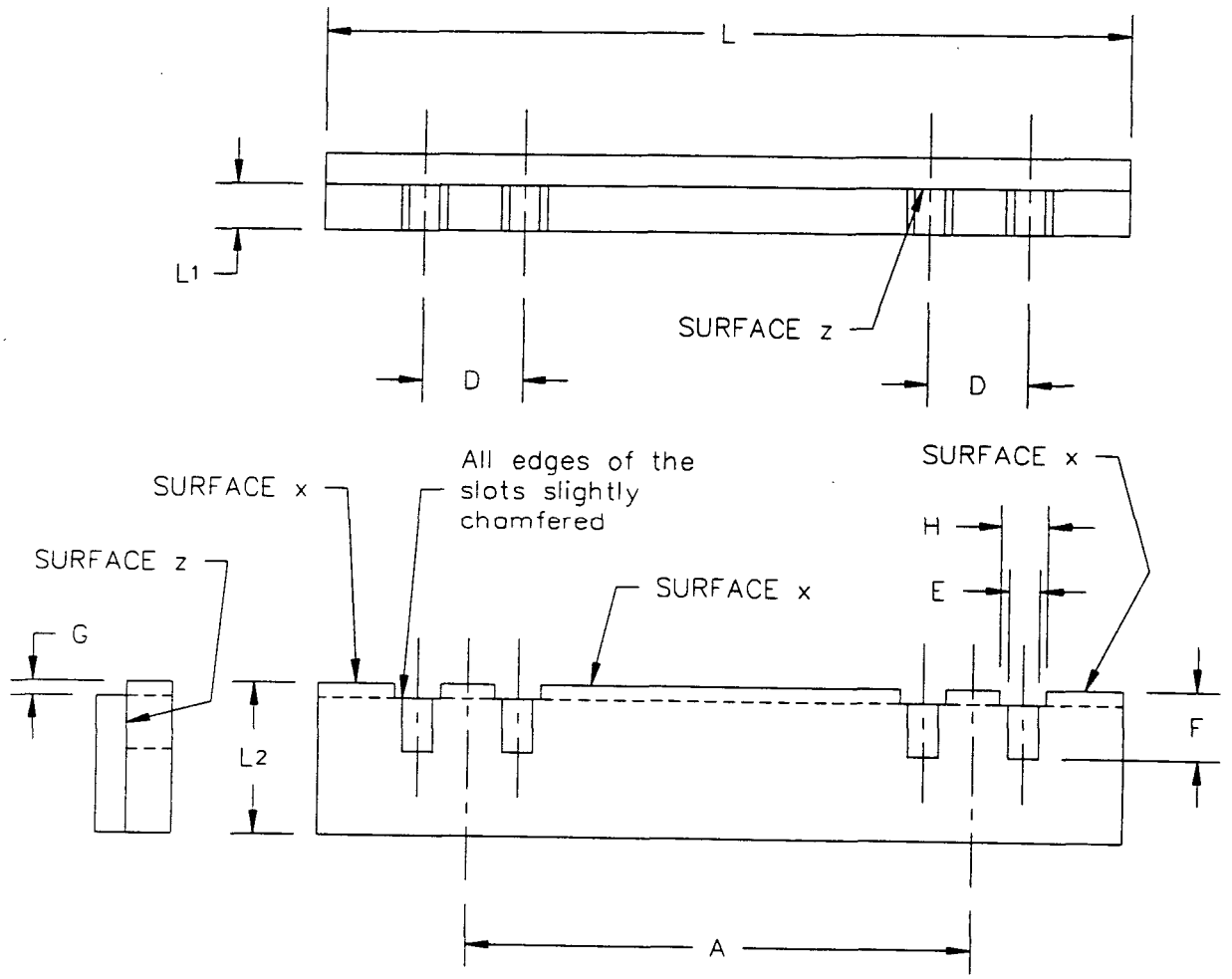

Copyright © 1998 by National Electrical Manufacturers Association
1300 North 17th Street, Suite 1847, Rosslyn, VA 22209

First Edition
October 1998

Copyright National Electrical Manufacturers Association
Provided by IHS under license with NEMA
No reproduction or networking permitted without license from IHS
Not for Resale

Reference	Dimension in	Tolerance in	Nearest metric equivalent mm
A (2G13-41)	1.625	±0.0004	41.3
(2G13-92)	3.625	±0.0004	92.0
(2G13-152)	6.0	±0.0004	152.4
D	0.5	±0.0004	12.7
E	0.189	+0.0004	4.79
F	0.32	+0.004	8.0
G	0.06	+0.004	1.5
H	0.24	+0.004	6.0
L (2G13-41)	3.0	approx.	81.0
(2G13-92)	5.0	approx.	132.0
(2G13-152)	8.5	approx.	192.0
L_1	0.2	approx.	5.0
L_2	0.7	approx.	18.0

Purpose

To check dimension A of bases.

For details of 2G13 bases, see ANSI C81.61, Standard Sheet 1-420.

Testing

Without using undue force, attempt to insert the pins of the base into the slots in such a way that the side of at least one pin of each pair is in contact with surface z. Inspect for contact between the underside of at least one of the G13 sections *with surface x of the gauge*.

Copyright © 1998 by National Electrical Manufacturers Association
1300 North 17th Street, Suite 1847, Rosslyn, VA 22209

First Edition
October 1998

Copyright National Electrical Manufacturers Association
Provided by IHS under license with NEMA
No reproduction or networking permitted without license from IHS
Not for Resale

"Go" Gauges for Testing Insertion and Contact-Making for 2G13 Lampholders

The drawing is intended only to illustrate the essential dimensions of the gauges.

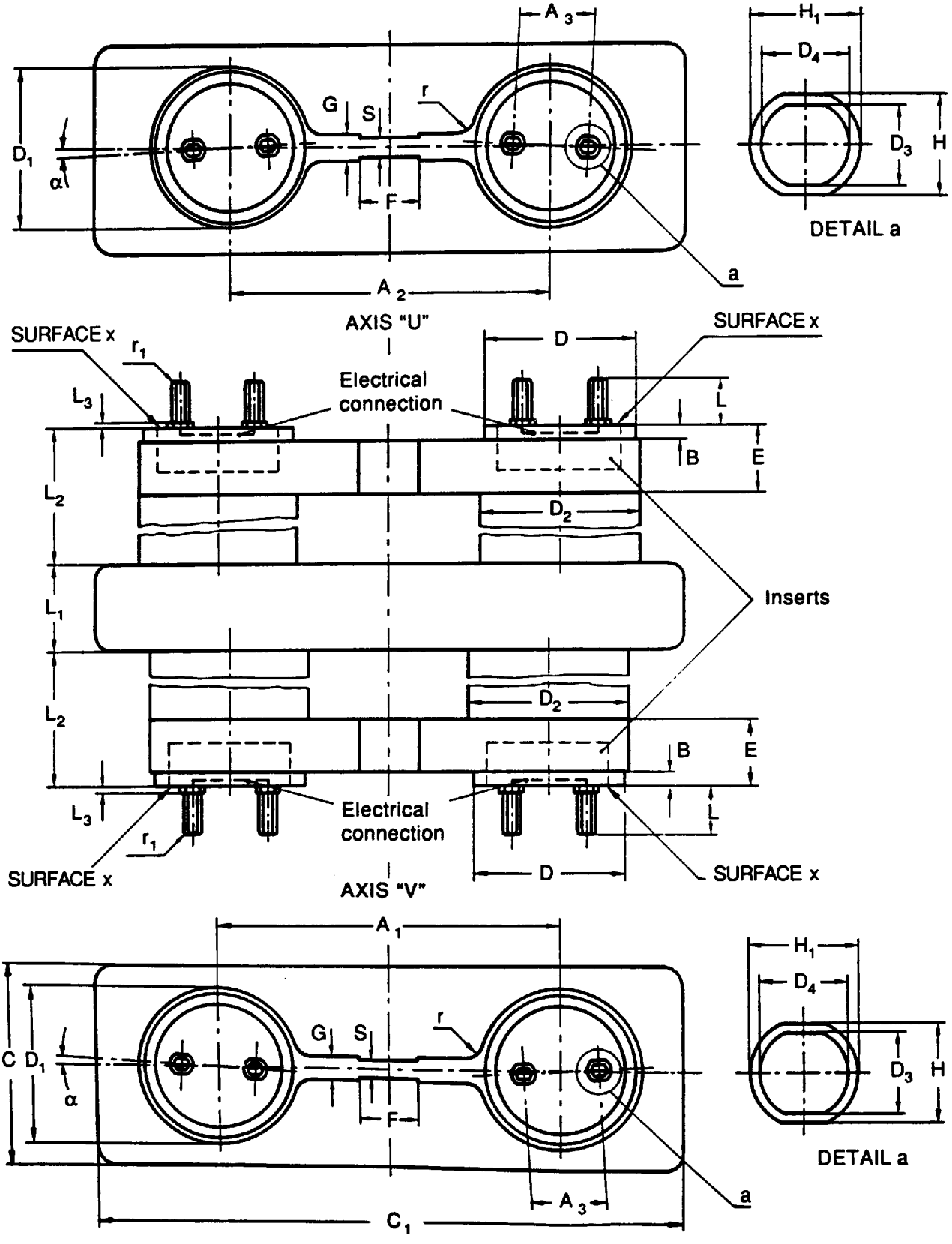

Copyright National Electrical Manufacturers Association
Provided by IHS under license with NEMA
No reproduction or networking permitted without license from IHS
Not for Resale

Reference	Dimension in	Tolerance in	Nearest metric equivalent mm
A_1 (2G13-41)	1.70	+0.0008	43.2
(2G13-92)	3.70	+0.0008	94.0
(2G13-152)	6.08	+0.0008	154.4
A_2 (2G13-41)	1.54	−0.0008	39.1
(2G13-92)	3.54	−0.0008	90.0
(2G13-152)	5.92	−0.0008	150.4
A_3	0.50	±0.0004	12.7
B	0.098	−0.0008	2.5
C	2.0	approx	50.0
C_1	6.0	approx	150.0
D	1.438	+0.0008	36.52
D_1	1.52	+0.0008	38.5
D_2	1.55	+0.0008	39.5
D_3	0.105	+0.0004	2.67
D_4 (Note)	0.105	+0.0004	2.79
E	0.51	+0.0004	13.0
G	0.51	+0.0008	13.0
H	0.13	+0.0004	3.3
H_1	0.142	+0.0004	3.61
L	0.300	+0.0004	7.62
L_1	0.6	approx	15.0
L_2	2.75	approx	70.0
L_3	0.030	+0.0004	0.76
r	0.14	+0.004	3.5
r_1	0.05	+0.008	1.2
α (degrees)	3°	±5'	3°

NOTE – Future objective for dimension D_4 is 0.110 in (2.79 mm).

Purpose

To check the insertion and contact-making in lampholders.

NOTE – These gauges are not suitable for checking any lamp retention devices where provided.

For details of 2G13 lampholders, see ANSI C81.62, Standard Sheet 2-420.

Copyright National Electrical Manufacturers Association
Provided by IHS under license with NEMA
No reproduction or networking permitted without license from IHS
Not for Resale

Testing

Without using undue force, attempt to insert each end of the appropriate gauge into the lampholder, and check the relationship of surfaces x with the face of the lampholder.

If surfaces x is in contact with the face of the lampholder, check for electrical contact through the holder contacts by the appropriate test circuit.

Repeat the tests after the gauge has been rotated 180° about the U-V axis.

Copyright National Electrical Manufacturers Association
Provided by IHS under license with NEMA
No reproduction or networking permitted without license from IHS
Not for Resale

Gauge for Testing Contact-Making for 2G13 Lampholders

This drawing is intended only to illustrate the essential dimensions of the gauge.

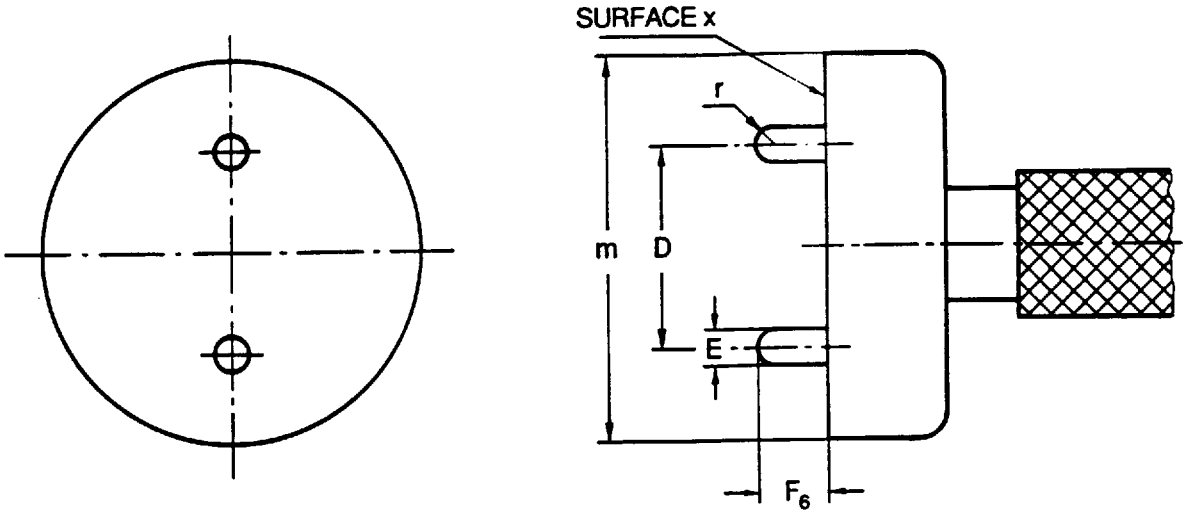

Reference	Dimension in	Tolerance in	Nearest metric equivalent mm
D	0.500	±0.0002	12.70
E	0.090	−0.0004	2.29
F_6	0.171	−0.0004	4.35
m	approx 1	–	approx 24
r	approx E/2	–	approx E/2

Purpose
To check contact-making in 2G13 lampholders.

For details of 2G13 lampholders, see ANSI C81.62, Standard Sheet 2-420.

Testing
Before initiating this test, the standard lampholder shall have satisfied the requirements of gauge 3-423. Insert this gauge in each section of the lampholder in turn, and check to see if gauge surface x is in contact with the holder. Then move the gauge to all possible lateral positions.

Copyright National Electrical Manufacturers Association
Provided by IHS under license with NEMA
No reproduction or networking permitted without license from IHS
Not for Resale

"Go" Gauge For G16d Mogul and Extended Mogul End-Prong Bases

The drawing is intended only to illustrate the essential dimensions of the gauge.

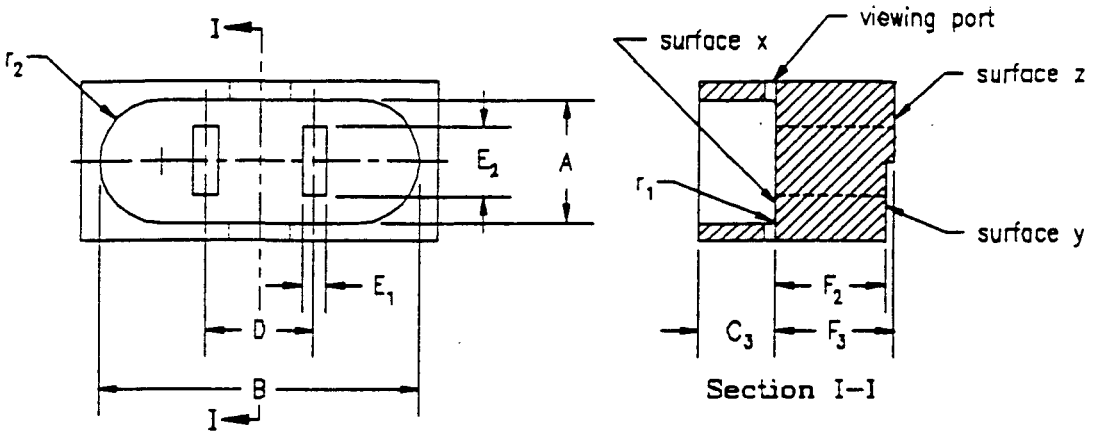

Copyright © 1997 by National Electrical Manufacturers Association
1300 North 17th Street, Suite 1847, Rosslyn, VA 22209

First Edition
December 1997

Copyright National Electrical Manufacturers Association
Provided by IHS under license with NEMA
No reproduction or networking permitted without license from IHS
Not for Resale

Reference	Dimension (in)	Tolerance (in)	Nearest Metric Equivalent (mm)
A	0.769	+0.002	19.53
B	2.094	+0.002	53.19
C_3	0.400	Å0.005	10.16
D	0.656	Å0.0005	16.66
E_1	0.053	+0.0005	1.35
E_2	0.331	+0.001	8.41
F_2	0.430	-0.002	10.92
F_3	0.540	+0.002	13.72
r_1 (Note 1)	0.039	-0.002	1.0
r_2	0.365	-0.005	9.27

Note

1. Radius r_1 applies all around the inside cavity, at the bottom.

Purpose

To check lamps with either G16d/12X52 or G16d/32x52 bases for control of insulator block size, prong size, length and displacement.

For details of G16d bases, see ANSI C81.61, Standard Sheet 1-430.

Testing

Without undue force, attempt to insert the base of a lamp into the cavity of this gauge. When the insulator surface x, or the tang area of the base are in contact with surface x of the gauge, check the relationship of the ends of the prongs to gauge surfaces y and z.

Copyright © 1997 by National Electrical Manufacturers Association
1300 North 17th Street, Suite 1847, Rosslyn, VA 22209

First Edition
December 1997

Copyright National Electrical Manufacturers Association
Provided by IHS under license with NEMA
No reproduction or networking permitted without license from IHS
Not for Resale

"Go" Gauge For G16d Mogul End-Prong Connectors

The drawing is intended only to illustrate the essential dimensions of the gauge.

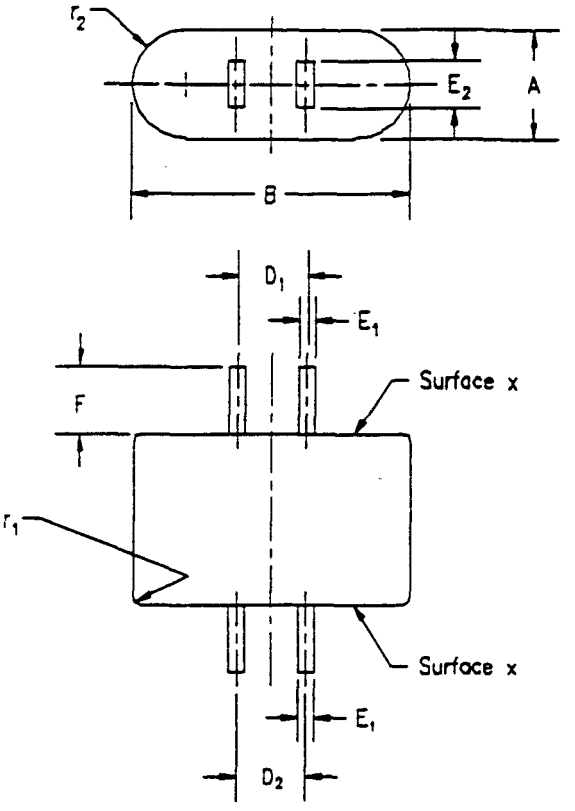

Copyright © 1997 by National Electrical Manufacturers Association
1300 North 17th Street, Suite 1847, Rosslyn, VA 22209

First Edition
December 1997

Copyright National Electrical Manufacturers Association
Provided by IHS under license with NEMA
No reproduction or networking permitted without license from IHS
Not for Resale

Reference	Dimension (in)	Tolerance (in)	Nearest Metric Equivalent (mm)
A	0.770	-0.002	19.55
B	2.115	-0.002	53.72
D_1	0.650	Å0.0005	16.51
D_2	0.662	Å0.0005	16.81
E_1	0.054	-0.0005	1.37
E_2	0.333	-0.001	8.46
F	0.544	-0.002	13.82
r_1 (Note 1)	0.036	+0.001	0.91
r_2	0.355	+0.005	9.02

Note

1. Radius r_1 applies all around, at the top and bottom.

Purpose

To check G16d connectors with the respect to the fit of a lamp with maximum prong spacings.

For details of G16d connectors, see ANSI C81.62, Standard Sheet 2-340.

Testing

Attempt to insert each end of this gauge into a connector, and check for fit.

Copyright © 1997 by National Electrical Manufacturers Association
1300 North 17th Street, Suite 1847, Rosslyn, VA 22209

First Edition
December 1997

Copyright National Electrical Manufacturers Association
Provided by IHS under license with NEMA
No reproduction or networking permitted without license from IHS
Not for Resale

"Go" Gauge for G17t- and G17q-Based Lamps (Pin Arrangement No. 1)

The drawing is intended only to illustrate the essential dimensions of the gauge.

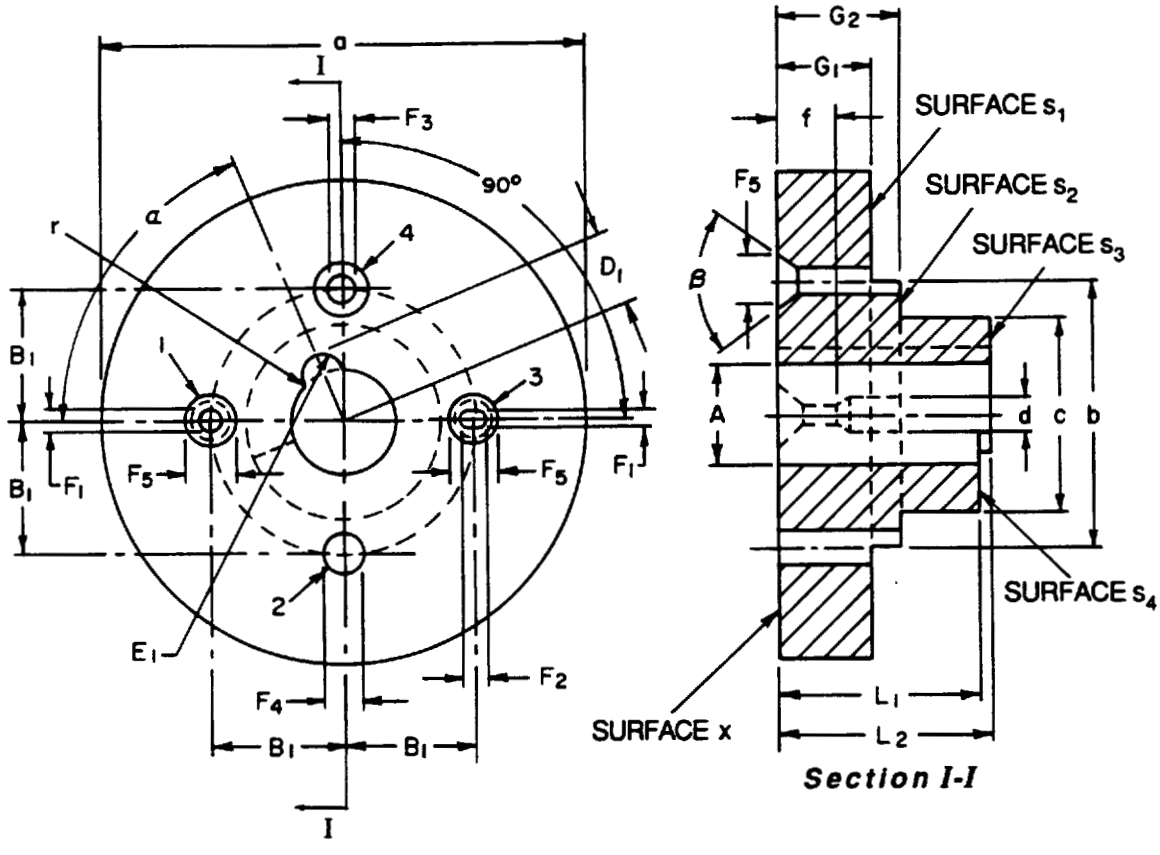

Copyright National Electrical Manufacturers Association
Provided by IHS under license with NEMA
No reproduction or networking permitted without license from IHS
Not for Resale

ANSI C81.63-1991
Std Sheet 3-439-1

Reference	Dimension in	Tolerance in	Nearest metric equivalent mm
A	0.271	−0.0005	6.88
B_1	0.3435	±0.0003	8.72
D_1	0.1825	−0.0005	4.64
E_1	0.047	−0.0005	1.19
F_1	0.052	−0.0005	1.32
F_2	0.070	−0.0005	1.78
F_3	0.061	−0.001	1.55
F_4	0.090	−0.001	2.29
F_5	0.090	−0.001	2.29
G_1	0.235	+0.0005	5.97
G_2	0.295	−0.0005	7.49
L_1	0.525	+0.0005	13.34
L_2	0.545	−0.0005	13.84
a	1.25	±0.02	31.75
b	0.687	±0.005	17.45
c	0.50	±0.02	12.70
d	0.094	±0.01	2.39
f	0.150	±0.001	3.81
r	0.018	−0.002	0.46
α (degrees)	67° 30'	±5'	67° 30'
β (degrees)	80°	±1°	80°

Purpose

To check minimum and maximum post length, post diameter, minimum and maximum pin length, pin diameter, pin spacing, key size and key orientation of G17t- and G17q-based lamps.

For details of G17t and G17q bases, see ANSI C81.61, Standard Sheets 1-439 and 1-440, respectively.

Testing

Insert the base into the gauge and check for contact at surface x. Also, check the positions of the pin-ends relative to surface s_1 and s_2 and the center post relative to surfaces s_3 or s_4.

Copyright National Electrical Manufacturers Association
Provided by IHS under license with NEMA
No reproduction or networking permitted without license from IHS
Not for Resale

"Go" Gauge for G17q Lampholders (Pin Arrangement No. 1)

The drawing is intended only to illustrate the essential dimensions of the gauge.

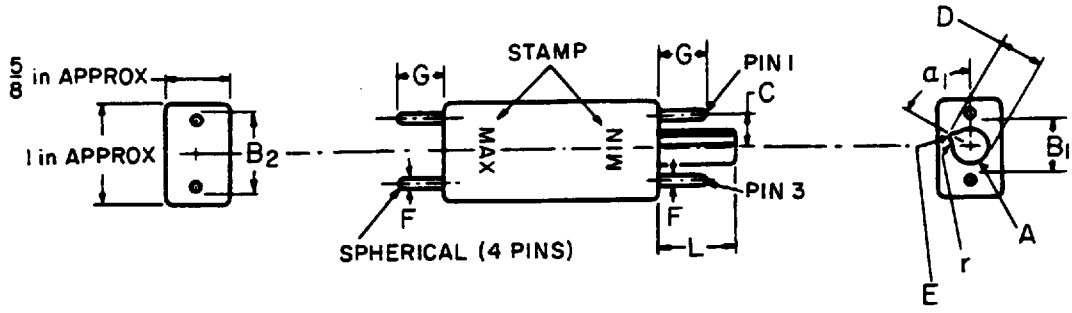

Reference	Dimension in	Tolerance in	Nearest metric equivalent mm
A (dia)	0.271	+0.0005	6.88
B_1	0.626	–0.001	15.90
B_2	0.748	+0.001	19.00
C	0.3435	±0.0005	8.72
D	0.319	+0.0005	8.10
E (radius)	0.047	+0.0005	1.19
F	0.051	+0.0005	1.30
G	0.295	+0.002	7.49
L	0.545	+0.002	13.84
r (radius)	0.015	+0.002	0.38
α_1 (degrees)	67° 30'	±5'	67° 30'

Purpose
To check post diameter, pin spacing, pin diameter, key size, and key orientation.

For details of G17q lampholders, see ANSI C81.62, Standard Sheet 2-440.

Testing
Insert each end of the gauge into the lampholder until the surface of the gauge butts against the surface of the holder.

Copyright National Electrical Manufacturers Association
Provided by IHS under license with NEMA
No reproduction or networking permitted without license from IHS
Not for Resale

"Go" Gauge for GX17q-Based Lamps (Pin Arrangement No. 2)

The drawing is intended only to illustrate the essential dimensions of the gauge.

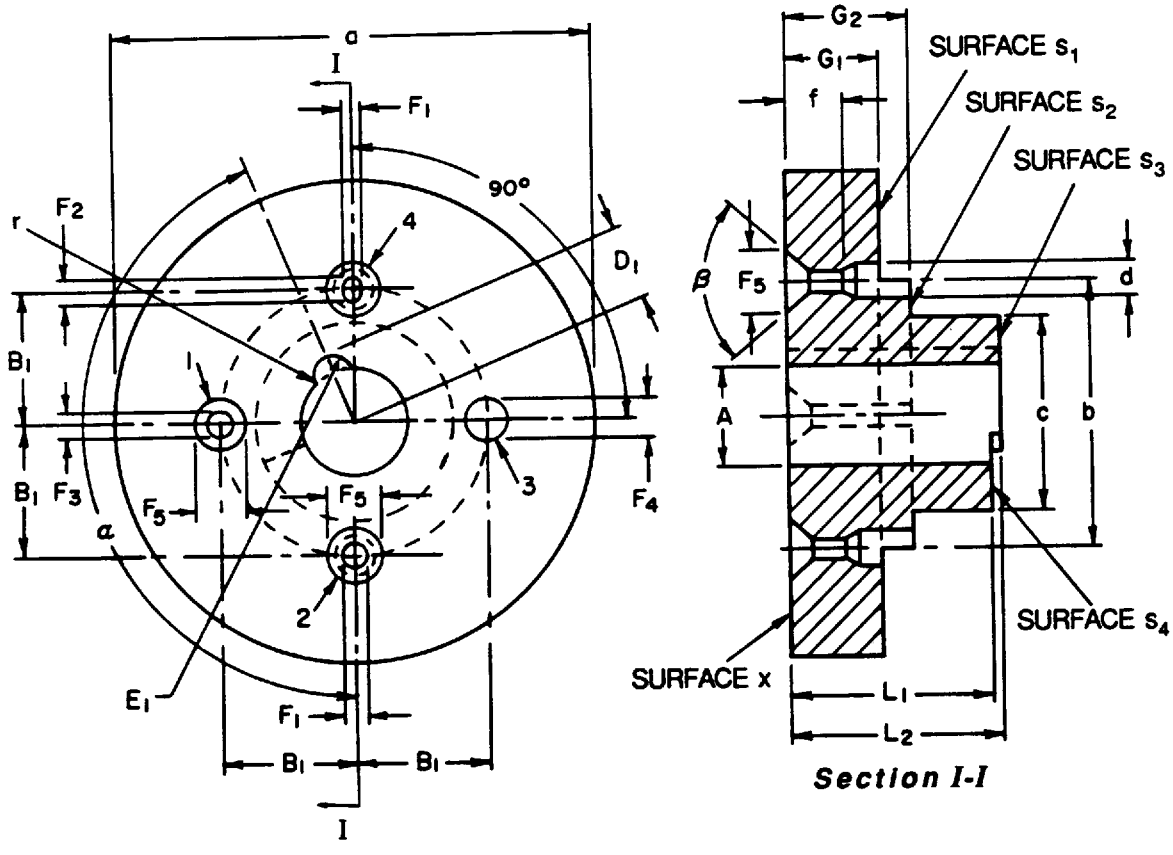

Section I-I

Copyright National Electrical Manufacturers Association
Provided by IHS under license with NEMA
No reproduction or networking permitted without license from IHS
Not for Resale

Reference	Dimension in	Tolerance in	Nearest metric equivalent mm
A	0.271	−0.0005	6.88
B_1	0.3435	±0.0003	8.72
D_1	0.1825	−0.0005	4.64
E_1	0.047	−0.0005	1.19
F_1	0.052	−0.0005	1.32
F_2	0.070	−0.0005	1.78
F_3	0.061	−0.001	1.55
F_4	0.090	−0.001	2.29
F_5	0.090	−0.001	2.29
G_1	0.235	+0.0005	5.97
G_2	0.295	−0.0005	7.49
L_1	0.525	+0.0005	13.34
L_2	0.545	−0.0005	13.84
a	1.25	±0.02	31.75
b	0.687	±0.005	17.45
c	0.50	±0.02	12.70
d	0.094	±0.01	2.39
f	0.150	±0.001	3.81
r	0.018	−0.002	0.46
α (degrees)	157° 30'	±5'	157° 30'
β (degrees)	80°	±1°	80°

Purpose
To check minimum and maximum post length, post diameter, minimum and maximum pin length, pin diameter, pin spacing, key size, and key orientation.

For details of GX17q bases, see ANSI C81.61, Standard Sheet 1-440.

Testing
Insert the base into the gauge and check for contact at surface x. Also, check the positions of the pin-ends relative to surfaces s_1 and s_2 and the center post relative to surfaces s_3 and s_4.

Copyright National Electrical Manufacturers Association
Provided by IHS under license with NEMA
No reproduction or networking permitted without license from IHS
Not for Resale

"Go" Gauge for GX17q Four-Pin Prefocus Lampholders (Pin Arrangement No. 2)

The drawing is intended only to illustrate the essential dimensions of the gauge.

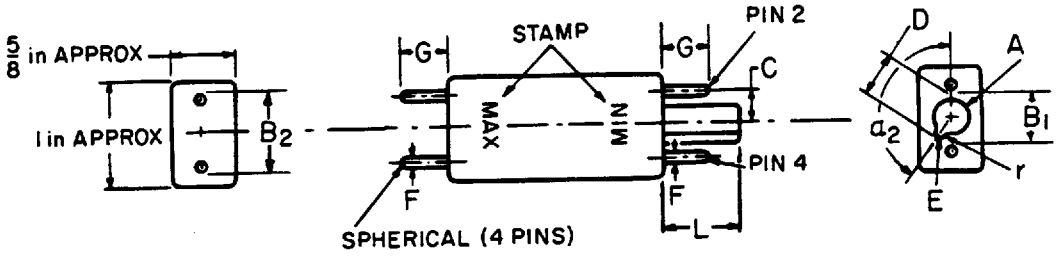

Reference	Dimension in	Tolerance in	Nearest metric equivalent mm
A (dia)	0.271	+0.0005	6.88
B_1	0.626	−0.001	15.90
B_2	0.748	+0.001	19.00
C	0.3435	±0.0005	8.72
D	0.319	+0.0005	8.10
E (radius)	0.047	+0.0005	1.19
F	0.051	+0.0005	1.30
G	0.295	+0.002	7.49
L	0.545	+0.002	13.84
r (radius)	0.015	+0.002	0.38
α_2 (degrees)	157° 30'	±5'	157° 30'

Purpose
To check post diameter, pin spacing, pin diameter, key size, and key orientation.

For details of GX17q lampholders, see ANSI C81.62, Standard Sheet 2-440.

Testing
Insert each end of the gauge into the lampholder until the surface of the gauge butts against the surface of the holder.

Copyright National Electrical Manufacturers Association
Provided by IHS under license with NEMA
No reproduction or networking permitted without license from IHS
Not for Resale

Two-Pin Contact-Making Gauge for G17q and GX17q Four-Pin Prefocus Lampholders

The drawing is intended only to illustrate the essential dimensions of the gauge.

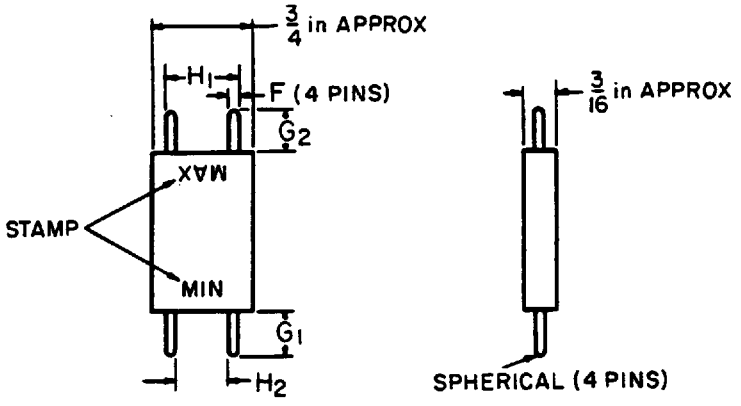

Reference	Dimension in	Tolerance in	Nearest metric equivalent mm
F	0.049	−0.0002	1.24
G_1	0.235	−0.001	5.97
G_2	0.295	+0.001	7.49
H_1	0.5420	+0.0005	13.77
H_2	0.4296	−0.0005	10.91

Purpose

To check the ability of a lampholder to make electrical contact with the contact-making pins.

For details of G17q and GX17q lampholders, see ANSI C81.62, Standard Sheet 2-440.

Testing

Insert each end of the gauge into the holes 1 and 4 of G17 lampholder or holes 1 and 2 of GX17 holders, until the gauge is in contact with the holder, and check electrical continuity.

Copyright National Electrical Manufacturers Association
Provided by IHS under license with NEMA
No reproduction or networking permitted without license from IHS
Not for Resale

Rotation Gauge for G17q and GX17q Four-Pin Prefocus Lampholders

The drawing is intended only to illustrate the essential dimensions of the gauge.

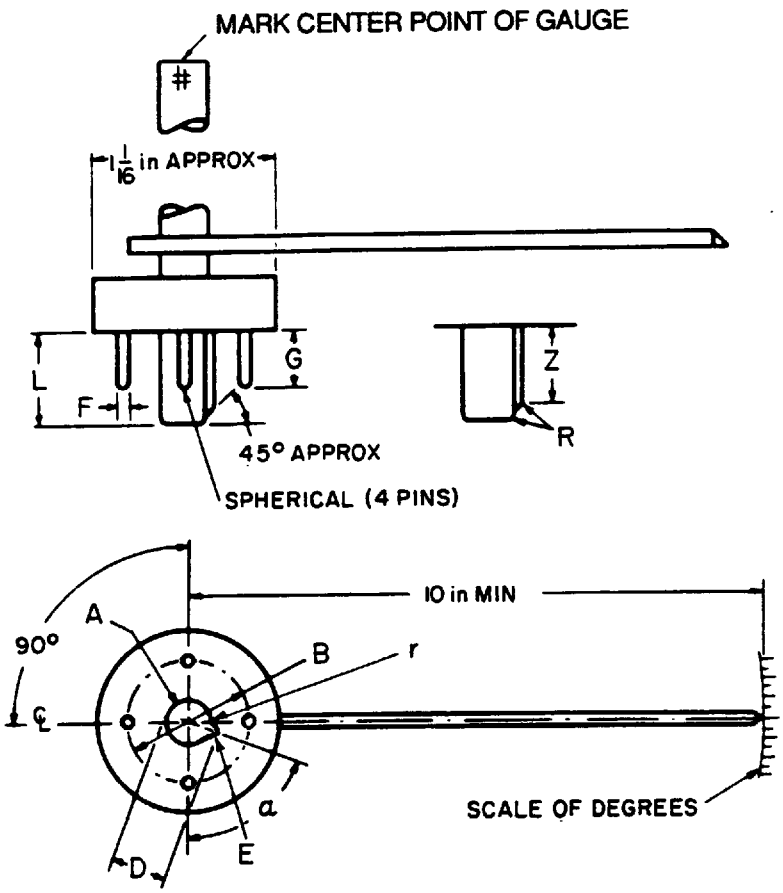

Reference	Dimension in	Tolerance in	Nearest metric equivalent mm
A (dia)	0.258	−0.0002	6.55
B	0.687	±0.0003	17.45
D	0.301	−0.0002	7.64
E (dia)	0.083	−0.0002	2.11
F	0.049	±0.0001	1.24
G	0.265	±0.005	6.73
L	0.535	±0.005	13.59
R	0.015	approx	0.38
Z	0.395	±0.005	10.03
r (radius)	0.015	+0.002	0.38
α (degrees)	67° 30'	±5'	67° 30'

Copyright National Electrical Manufacturers Association
Provided by IHS under license with NEMA
No reproduction or networking permitted without license from IHS
Not for Resale

Purpose

To check lampholders for the angular relationship between the mounting holes and the axis of the holes for the base alignment pins, and for the extent of lamp rotation within the lampholder.

For details of G17q and GX17q lampholders, see ANSI C81.62, Standard Sheet 2-440.

Testing

With the holder held down on the two appropriate alignment pins, insert the gauge in the lampholder until the surface of the gauge butts against the lampholder. Rotate the gauge to its limits and read the angle on the scale of degrees.

Copyright National Electrical Manufacturers Association
Provided by IHS under license with NEMA
No reproduction or networking permitted without license from IHS
Not for Resale

"Go" Gauge for G20 Mogul Bipin Bases on Finished Lamps

The drawing is intended only to illustrate the essential dimensions of the gauge.

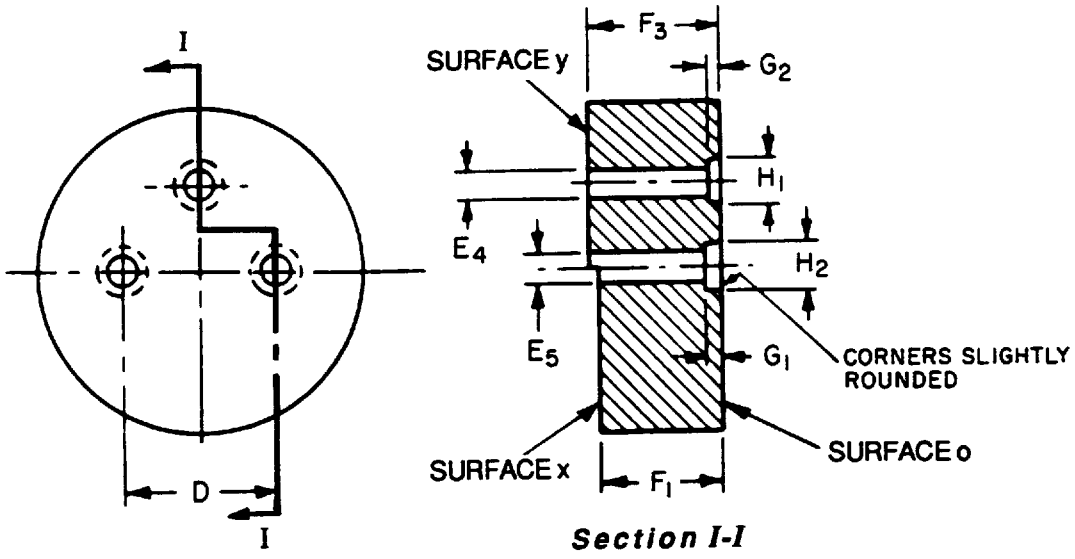

Section I-I

Reference	Dimension in	Tolerance in	Nearest metric equivalent mm
D	0.781	±0.0002	19.88
E_4	0.139	+0.0004	3.53
E_5	0.147	+0.0004	3.73
F_1	0.615	−0.001	15.62
F_3	0.660	+0.001	16.76
G_1	0.075	approx	1.90
G_2	0.065	+0.0005	1.65
H_1	0.190	+0.0005	4.83
H_2	0.220	approx	5.59

Purpose

To check maximum pin diameter, minimum and maximum pin length, and the combined pin diameter and spacing of pins (including bosses).

For details of G20 bases, see ANSI C81.61, Standard Sheet 1-452.

Testing

Insert the lamp's base pins into gauge holes E_5 at surface o and check for contact of base face to gauge. Also, check the position of the pin-ends relative to surfaces x and y. Insert each individual pin into hole E_4 at surface o and check for base face to gauge contact.

Copyright National Electrical Manufacturers Association
Provided by IHS under license with NEMA
No reproduction or networking permitted without license from IHS
Not for Resale

"Go" Gauges for G20 Mogul Bipin Lampholders

Two separate double-ended gauges are required; a minimum pin-spacing gauge and a maximum pin-spacing gauge.

The drawing is intended only to illustrate the essential dimensions of the gauges.

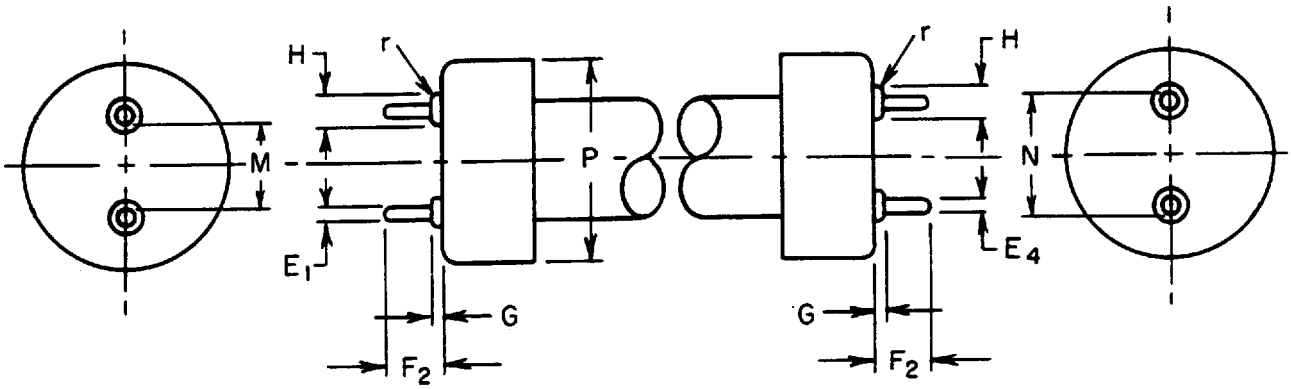

MINIMUM PIN SPACING GAUGE

MAXIMUM PIN SPACING GAUGE

Reference	Dimension in	Tolerance in	Nearest metric equivalent mm
E_1	0.120	−0.0004	3.05
E_4	0.139	+0.0004	3.53
F_2	0.625	−0.001	15.87
G	0.065	−0.0004	1.65
H	0.190	−0.0004	4.83
M	0.634	+0.0005	16.10
N	0.928	−0.0005	23.57
P	2.0	approx	51.0
r	0.030	+0.005	0.76

NOTES

1 Pin ends are hemispherical in shape.

2 Pins should be of hardened steel.

Purpose

To check that lampholders will accept and permit removal of lamps having either minimum spacing between the pins or maximum spacing across the pins.

For details of G20 lampholders, see ANSI C81.62, Standard Sheet 2-452.

Copyright National Electrical Manufacturers Association
Provided by IHS under license with NEMA
No reproduction or networking permitted without license from IHS
Not for Resale

Testing

Insert the minimum and maximum gauges into the lampholder and check for the contact of the gauge face with the holder face.

Check lampholders for good engagement with the pins of the minimum-spacing gauge after having been tested with the gauge having pins set at maximum spacing.

Lampholders that require rotation of the lamp during insertion shall be tested using the following procedure for each of the two "Go" gauges. One of the gauges shall be inserted by first rotating the gauge in a clockwise direction to seat it in the lampholder and then rotating it in a counterclockwise direction to remove it from the holder. The gauge shall then be inserted with a counterclockwise rotation and removed with a clockwise rotation. The procedure shall then be repeated using the other gauge.

Copyright National Electrical Manufacturers Association
Provided by IHS under license with NEMA
No reproduction or networking permitted without license from IHS
Not for Resale

Torsion Test Device for G20 Mogul Bipin Lampholders

In making the torsion test of an inflexible (rigidly fixed) lampholder as called for in ANSI C81.62, Standard Sheet 2-452, the torque is applied by means of a simulated lamp base of the following dimensions.

The drawing is intended only to illustrate the essential dimensions of the gauge.

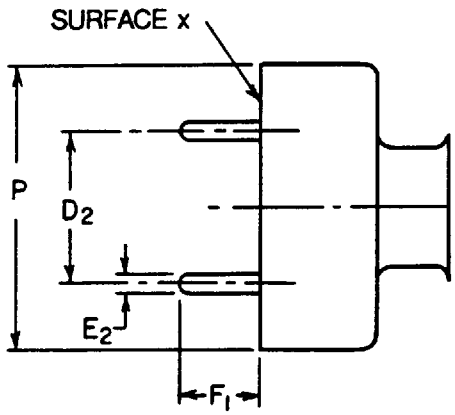

Reference	Dimension in	Tolerance in	Nearest metric equivalent mm
D_2	0.770	±0.0003	19.56
E_2	0.130	−0.0004	3.30
F_1	0.615	+0.010	15.62
P	2.00	approx	51.0

NOTES

1 Pins ends are hemispherical in shape.

2 Pins should be of hardened steel.

Purpose
To provide a standard means of applying a torsion test to the lampholder contacts.

Testing
The simulated lamp base should be inserted in the lampholder until surface x is in contact with the holder face. The torque may be applied to either the test device (simulated lamp base and torsion test device) or to the lampholder, the other being rigidly mounted.

For details of G20 lampholders, see ANSI C81.62, Standard Sheet 2-452.

Copyright National Electrical Manufacturers Association
Provided by IHS under license with NEMA
No reproduction or networking permitted without license from IHS
Not for Resale

Double-Ended Gauge, Maximum Length Lamp and Minimum Lampholder Spacing, for G20 Mogul Bipin Lampholders

The drawing is intended only to illustrate the essential dimensions of the gauge.

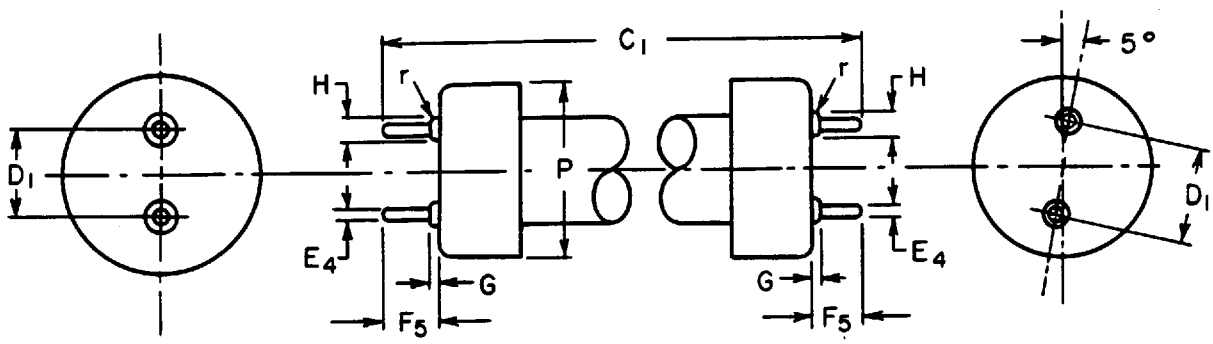

Reference	Dimension in	Tolerance in	Nearest metric equivalent mm
C_1 (Note 1)	11.56	−0.004	293.6
D_1	0.781	±0.0003	19.84
E_4	0.139	−0.0004	3.53
F_5	0.630	±0.0005	16.00
G	0.065	−0.0004	1.65
H	0.190	−0.0004	4.83
P	2.00	approx	51.0
r	0.030	+0.005	0.76

NOTES

1 For convenience in the use of the gauge, this length represents a lamp having a nominal length of 12 in (304.8 mm).

2 Pin ends are hemispherical in shape.

3 Pins should be of hardened steel.

The two ends of the gauge are so aligned that the plane containing the axes of the pins at one end forms an angle of 5° ± 0.25° with the plane containing the axes of the pins at the other end.

Purpose

To check a combined pair of lampholders to ascertain that, at their minimum permissible spacing (as recommended by the manufacturer), they will accept a lamp of maximum length and with maximum rotational misalignment between the planes of the base pins at the two ends of the lamp.

Copyright National Electrical Manufacturers Association
Provided by IHS under license with NEMA
No reproduction or networking permitted without license from IHS
Not for Resale

For details of G20 lampholders, see ANSI C81.62, Standard Sheet 2-452.

Testing
Insert and remove the gauge, observing any difficulties with such action.

Copyright National Electrical Manufacturers Association
Provided by IHS under license with NEMA
No reproduction or networking permitted without license from IHS
Not for Resale

Double-Ended Gauge, Minimum Length Lamp and Maximum Lampholder Spacing, for G20 Mogul Bipin Lampholders

The drawing is intended only to illustrate the essential dimensions of the gauge.

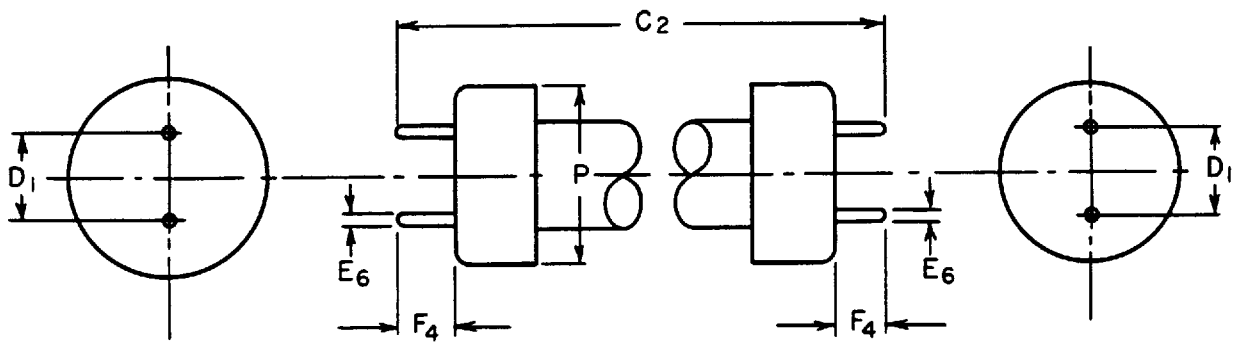

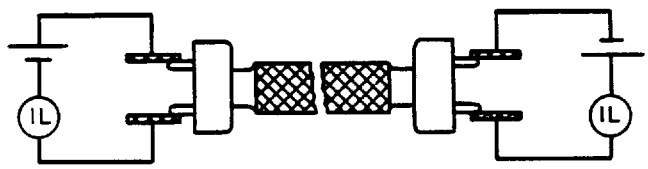

TEST CIRCUIT

Reference	Dimension in	Tolerance in	Nearest metric equivalent mm
C_2 (Note 1)	11.33	+0.004	287.8
D_1	0.781	±0.0003	19.84
E_6	0.102	+0.0004	2.59
F_4	0.610	±0.0005	15.49
P	2.00	approx	51.0

NOTES

1 For convenience in the use of the gauge, this length represents a lamp having a nominal length of 12 in (304.8 mm).

2 Pin ends are hemispherical in shape.

3 Pins should be of hardened steel.

Copyright National Electrical Manufacturers Association
Provided by IHS under license with NEMA
No reproduction or networking permitted without license from IHS
Not for Resale

Purpose
To check a combined pair of lampholders to ascertain that, at their maximum permissible spacing (as recommended by the manufacturer), they will make contact with all four pins of a minimum-length lamp.

For details of G20 lampholders, see ANSI C81.62, Standard Sheet 2-452.

Testing
Insert the gauge into the combined pair of holders and check the indicator light. Move the gauge axially while continuing to observe the indicator light.

Copyright National Electrical Manufacturers Association
Provided by IHS under license with NEMA
No reproduction or networking permitted without license from IHS
Not for Resale

"Go" and "Not-Go" Gauge for G22 Medium-Bipost-Based Lamps

The drawing is intended only to illustrate the essential dimensions of the gauge.

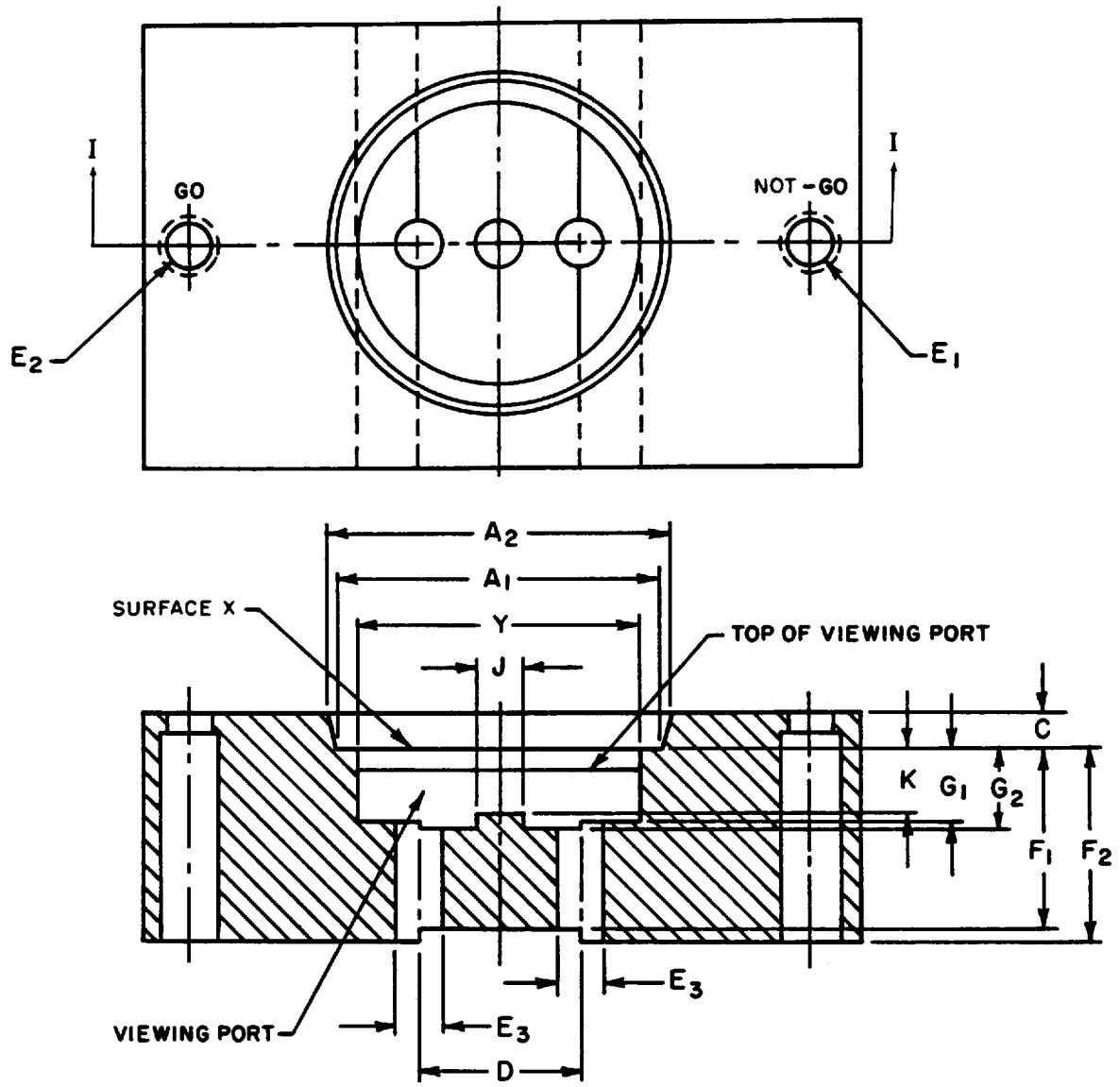

Section I-I

Copyright National Electrical Manufacturers Association
Provided by IHS under license with NEMA
No reproduction or networking permitted without license from IHS
Not for Resale

Reference	Dimension in	Tolerance in	Nearest metric equivalent mm
A_1	1.791	+0.001	45.49
A_2	1.857	+0.001	47.17
C	0.197	−0.001	5.00
D	0.875	±0.0005	22.22
E_1	0.248	−0.0005	6.30
E_2	0.252	+0.0005	6.40
E_3	0.264	+0.0005	6.71
F_1	0.980	−0.001	24.89
F_2	1.045	+0.001	26.54
G_1	0.394	−0.001	10.00
G_2	0.429	+0.001	10.90
J	0.250	+0.005	6.35
K	0.350	+0.001	8.89
Y	1.550	+0.002	39.37

Purpose
To check minimum and maximum post length, post spacing, maximum exhaust tip length, and maximum contour dimension.

For details of G22 bases, see ANSI C81.61, Standard Sheet 1-466.

Testing
Fully seat the lamp base into the recess of the gauge. Check dimensions F, G, and K for maximums and minimums. Check post diameters in holes E_1 and E_2 for "Not-Go" and "Go".

Copyright National Electrical Manufacturers Association
Provided by IHS under license with NEMA
No reproduction or networking permitted without license from IHS
Not for Resale

"Go" Gauge for G22 Medium Bipost Lampholders

The drawing is intended only to illustrate the essential dimensions of the gauge.

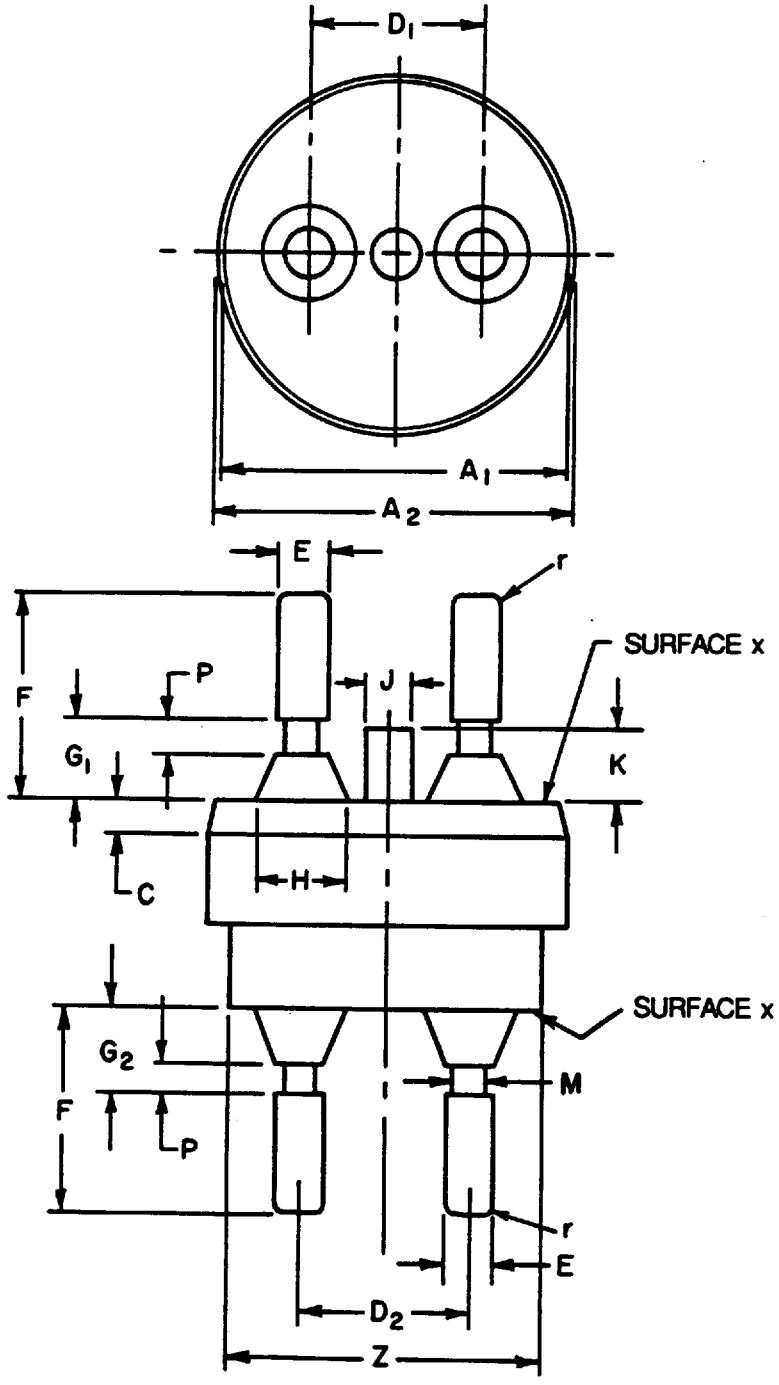

Copyright National Electrical Manufacturers Association
Provided by IHS under license with NEMA
No reproduction or networking permitted without license from IHS
Not for Resale

ANSI C81.63-1991
Std Sheet 3-469-1

Reference	Dimension in	Tolerance in	Nearest metric equivalent mm
A_1	1.795	−0.001	45.59
A_2	1.860	−0.001	47.24
C	0.194	+0.001	4.93
D_1	0.888	±0.0005	22.56
D_2	0.862	±0.0005	21.89
E	0.253	−0.0005	6.42
F	1.047	−0.001	26.59
G_1	0.392	+0.001	9.95
G_2	0.431	−0.001	10.95
H	0.465	+0.001	11.81
J	0.238	−0.001	6.05
K	0.352	−0.001	8.94
M	0.159	+0.001	4.04
P	0.152	+0.001	3.86
Z	1.620	−0.001	41.15
r	0.040	−0.001	1.02

Purpose
To check holders for fit of maximum and minimum base dimensions.

For details of G22 lampholders, see ANSI C81.62, Standard Sheet 2-466.

Testing
Fully insert each end of the gauge into the holder to surface x. Both ends should seat, meeting the reference plane of the holder when rotated into the operating position. For holders with a pin-locking mechanism, it should be possible to operate such a mechanism in the intended manner.

Copyright National Electrical Manufacturers Association
Provided by IHS under license with NEMA
No reproduction or networking permitted without license from IHS
Not for Resale

"Go" and "Not-Go" Gauge for G23 Bases on Finished Lamps

The drawing is intended only to illustrate the essential dimensions of the gauge.

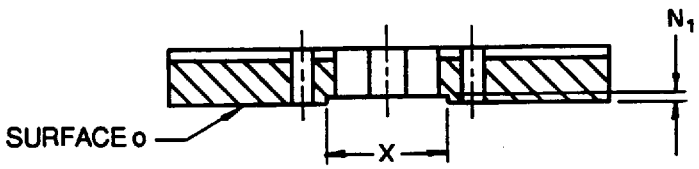

Section II-II

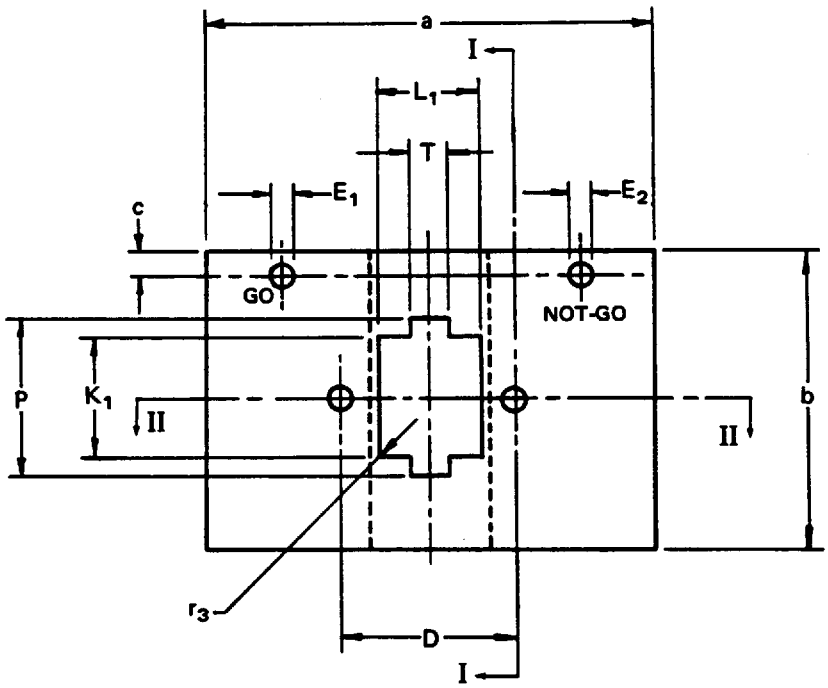

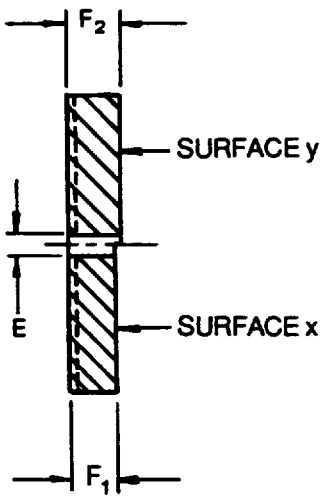

Section I-I

Copyright National Electrical Manufacturers Association
Provided by IHS under license with NEMA
No reproduction or networking permitted without license from IHS
Not for Resale

ANSI C81.63-1991
Std Sheet 3-475-1
Page 2 of 2 pages

Reference	Dimension mm	Tolerance mm
D	23.0	±0.005
E	2.79	+0.01
E_1	2.67	+0.01
E_2	2.29	–0.01
F_1	6.0	–0.025
F_2	6.8	+0.025
K_1	16.3	+0.01
L_1	13.9	+0.01
N_1	0.5	+0.01
P	21.0	+0.01
T	4.7	+0.01
X	16.0	±0.1
a	60	±0.5
b	40	±0.5
c	3	–0.2
r_3	0.5	–0.02

Purpose
To check dimensions K_1 max, L_1 max, P max, T max, r_3 min, F min, E min, E max, and the combined diameter and displacement of the pins of G23 bases on finished lamps.

For details of G23 bases, see ANSI C81.61, Standard Sheet 1-475.

Testing
Insert a lamp base into gauge at surface o until seated. Check pin lengths between F_1 and F_2. Check pins for "Go" and "Not-Go" in holes E_1 and E_2.

Copyright National Electrical Manufacturers Association
Provided by IHS under license with NEMA
No reproduction or networking permitted without license from IHS
Not for Resale

Gauge "A" for Checking Maximum Insertion Force and Maximum Withdrawal Force in G23 Lampholders

The drawing is intended only to illustrate the essential dimensions of the gauge.

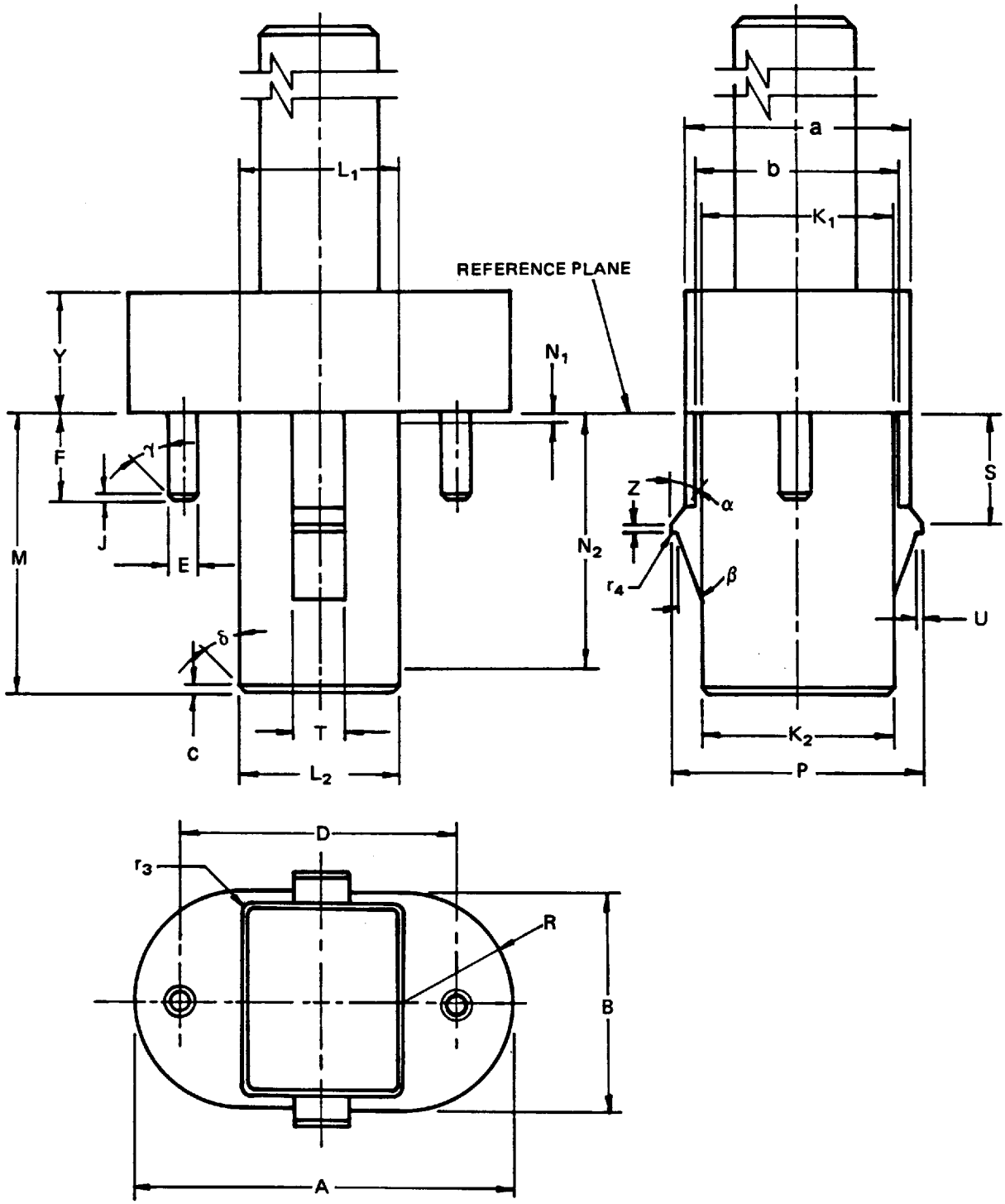

SURFACE FINISH: 0.4 μm, FOR THE PARTS BELOW THE REFERENCE PLANE

Copyright National Electrical Manufacturers Association
Provided by IHS under license with NEMA
No reproduction or networking permitted without license from IHS
Not for Resale

Reference	Standard Dimension mm	Tolerance mm	Reference	Standard Dimension mm	Tolerance mm
A	32.5	+0.02	S	8.85	−0.02
B	18.1	+0.02	T	4.7	+0.02
D	23.12	+0.01	U	0.2	+0.02
E	2.67	+0.01	Y	10	+0.05
F	6.8	+0.02	Z	0.5	+0.05
J	0.4	±0.05	a	19.0	±0.01
K_1 (Note 1)	16.3	+0.02	b	17.0	±0.01
K_2 (Note 2)	15.75	+0.02	c	0.5	+0.1
L_1 (Note 1)	13.9	+0.02	r_3	0.5	±0.5
L_2 (Note 2)	13.35	+0.02	r_4	0.15	+0.05
M	23.0	+0.02	α (degrees)	35°	±1°
N_1 (Note 1)	0.5	–	β (degrees)	20°	±1°
N_2 (Note 2)	21.0	–	γ (degrees)	35°	±1°
P	21.0	+0.02	δ (degrees)	45°	±1°
R	B/2	–			

NOTES

1 Dimensions K_1 and L_1 are measured at distance N_1 below the reference plane.

2 Dimensions K_2 and L_2 are measured at distance N_2 below the reference plane.

Purpose
To check maximum insertion force and maximum withdrawal force.

For details of G23 lampholders, see ANSI C81.62, Standard Sheet 2-475.

Testing
Measure the necessary force to fully insert the gauge into a lampholder. Measure the force necessary to withdraw the gauge.

Copyright National Electrical Manufacturers Association
Provided by IHS under license with NEMA
No reproduction or networking permitted without license from IHS
Not for Resale

Gauge "B" for Checking Maximum Insertion Force in G23 and GX23 Lampholders

The drawing is intended only to illustrate the essential dimensions of the gauge.

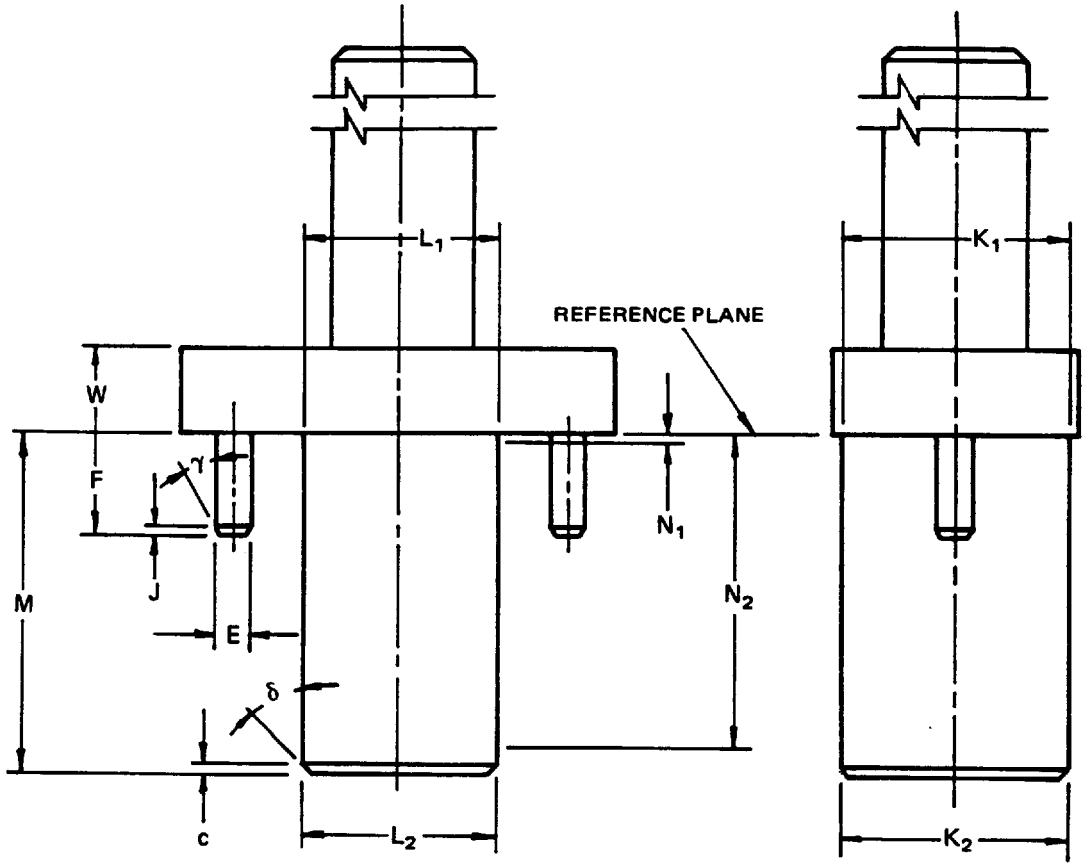

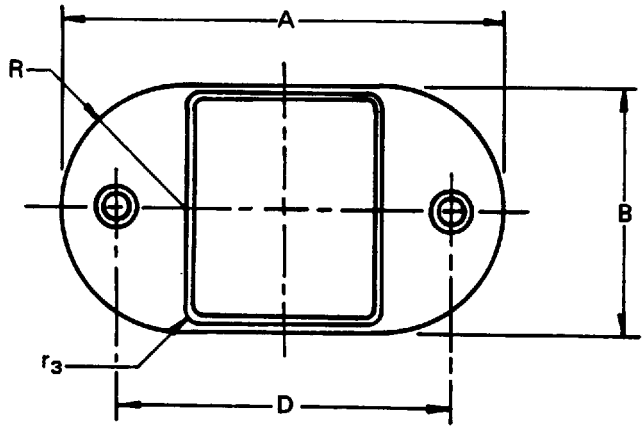

SURFACE FINISH: 0.4 μm, FOR THE PARTS BELOW THE REFERENCE PLANE

Copyright National Electrical Manufacturers Association
Provided by IHS under license with NEMA
No reproduction or networking permitted without license from IHS
Not for Resale

ANSI C81.63-1991
Std Sheet 3-481-1

Reference	Standard dimension mm	Tolerance mm	Reference	Standard dimension mm	Tolerance mm
A	30	±0.5	M	23.0	+0.02
B	17	±0.5	N_1 (Note 1)	0.5	–
D	22.88	–0.01	N_2 (Note 2)	21.0	–
E	2.67	+0.01	R	B/2	–
F	6.8	+0.02	W	6	±0.5
J	0.4	±0.05	*c*	0.5	±0.1
K_1 (Note 1)	16.3	+0.02	r_3	0.5	±0.05
K_2 (Note 2)	15.75	+0.02	α (degrees)	35°	±1°
L_1 (Note 1)	13.9	+0.02	δ (degrees)	45°	±1°
L_2 (Note 2)	13.35	+0.02			

NOTES

1 Dimensions L_1 and K_1 are measured at distance N_1 below the reference plane.

2 Dimensions L_2 and K_2 are measured at distance N_2 below the reference plane.

Purpose
To check maximum insertion force related to the dimensions of a base having maximum pin dimensions at minimum spacing.

For details and force requirements of G23 and GX23 lampholders, see ANSI C81.62, Standard Sheets 2-475 and 2-476, respectively.

Testing
Measure the force necessary to fully insert the gauge into a lampholder.

Copyright National Electrical Manufacturers Association
Provided by IHS under license with NEMA
No reproduction or networking permitted without license from IHS
Not for Resale

Gauge "C" for Checking Minimum Retention Force in G23 Lampholders

This drawing is intended only to illustrate the essential dimensions of the gauge.

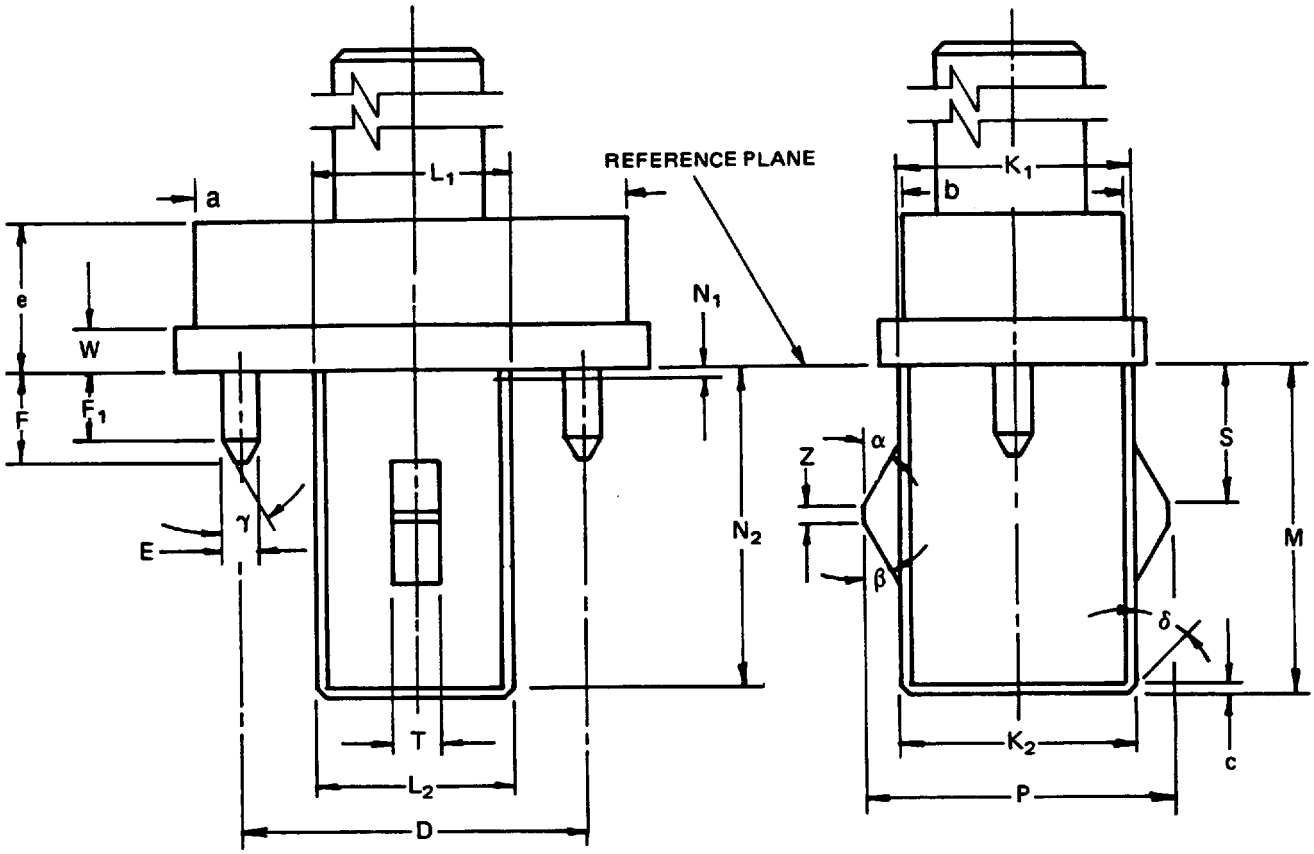

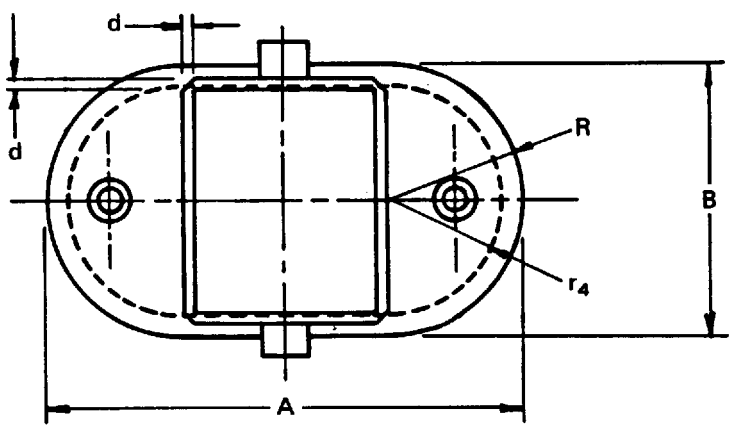

SURFACE FINISH: 0.4 μm, FOR THE PARTS BELOW THE REFERENCE PLANE.

Copyright National Electrical Manufacturers Association
Provided by IHS under license with NEMA
No reproduction or networking permitted without license from IHS
Not for Resale

ANSI C81.63-1991
Std Sheet 3-482-1
Page 2 of 2 pages

Reference	Standard dimension mm	Tolerance mm	Reference	Standard dimension mm	Tolerance mm
A	31.5	–0.02	S	9.15	+0.02
B	17.7	–0.02	T	3.5	–0.02
D	23.0	±0.01	W	3.0	–0.05
E	2.29	–0.01	Z	0.5	–0.05
F	6.0	–0.02	a	28.8	±0.5
F_1	5.5	–0.05	b	15	±0.5
K_1 (Note 1)	16.15	–0.02	c	0.6	±0.1
K_2 (Note 2)	15.6	–0.02	d	0.8	±0.1
L_1 (Note 1)	13.75	–0.02	e	10	±0.5
L_2 (Note 2)	13.2	–0.02	r_4	b/2	–
M	21.8	–0.02	α (degrees)	35°	±1°
N_1 (Note 1)	0.5	–	β (degrees)	30°	±1°
N_2 (Note 2)	21.0	–	γ (degrees)	30°	±1°
P	20.6	–0.02	δ (degrees)	45°	±1°
R	B/2	–			

NOTES

1 *Dimensions K_1 and L_1 are measured at distance N_1 below the reference plane.*

2 Dimensions K_2 and L_2 are measured at distance N_2 below the reference plane.

Purpose

To check minimum retention force related to the dimensions of a maximum base with regard to pin dimensions and center-post dimension.

For details of G23 lampholders, see ANSI C81.62, Standard Sheets 2-475.

Testing

After the gauge has been fully inserted into the lampholder, measure the force necessary to withdraw it.

Copyright National Electrical Manufacturers Association
Provided by IHS under license with NEMA
No reproduction or networking permitted without license from IHS
Not for Resale

"Go" and "Not-Go" Gauge for GX23 Bases on Finished Lamps

The drawing is intended only to illustrate the essential dimensions of the gauge.

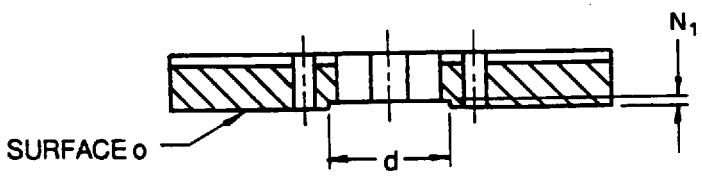

Section II-II

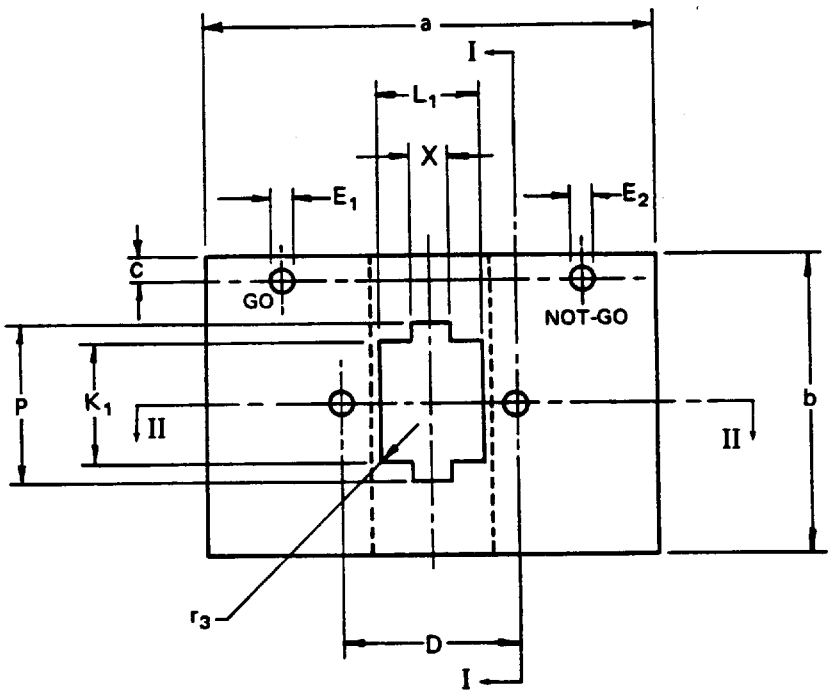

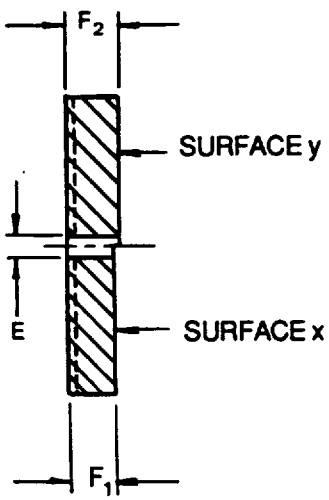

Section I-I

Copyright National Electrical Manufacturers Association
Provided by IHS under license with NEMA
No reproduction or networking permitted without license from IHS
Not for Resale

Reference	Standard dimensions	
	Dimension mm	Tolerance mm
D	23.0	±0.005
E	2.79	+0.01
E_1	2.67	+0.01
E_2	2.29	–0.01
F_1	6.0	–0.025
F_2	6.8	+0.025
K_1	16.3	+0.01
L_1	13.9	+0.01
N_1	0.5	+0.01
P	21.0	+0.01
X	3.3	–0.01
a	60	±0.5
b	40	±0.5
c	3	–0.2
d	16	+0.1

Purpose
To check E min, E max, K_1 max, L_1 max, P max, X max, and the combined diameter and displacement of the pins.

For details of GX23 bases, see ANSI C81.61, Standard Sheet 1-476.

Testing
Insert a lamp base into gauge at surface o until seated, check pin lengths F_1 and F_2. Check pins for "Go" and "Not-Go" in holes E_1 and E_2.

Copyright National Electrical Manufacturers Association
Provided by IHS under license with NEMA
No reproduction or networking permitted without license from IHS
Not for Resale

Gauge "A" for Checking Maximum Insertion Force and Maximum Withdrawal Force in GX23 Lampholders

The drawing is intended only to illustrate the essential dimensions of the gauge.

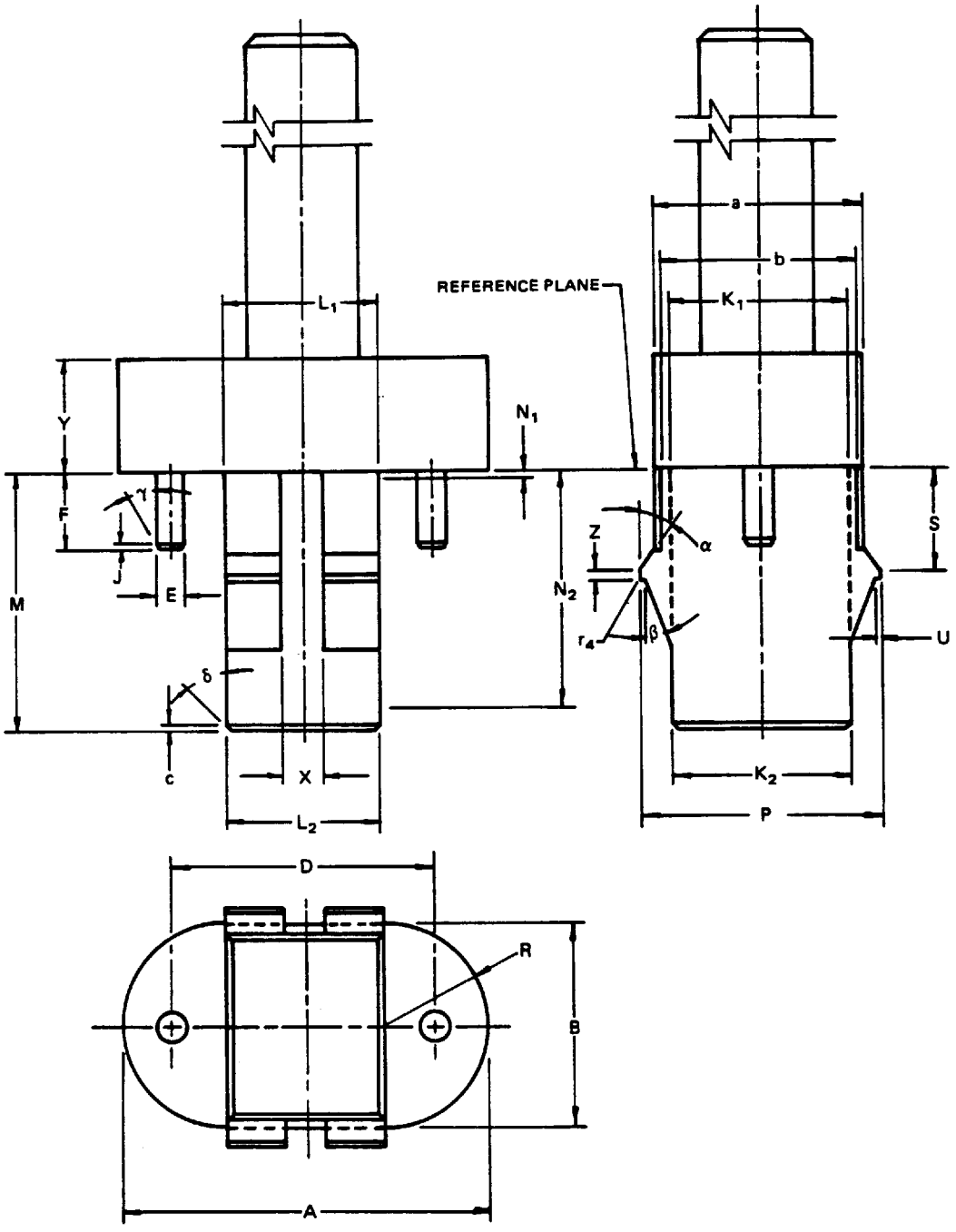

SURFACE FINISH: 0.4 μm, FOR THE PARTS BELOW THE REFERENCE PLANE

Copyright National Electrical Manufacturers Association
Provided by IHS under license with NEMA
No reproduction or networking permitted without license from IHS
Not for Resale

Reference	Standard dimension mm	Tolerance mm	Reference	Standard dimension mm	Tolerance mm
A	32.5	+0.02	S	8.85	−0.02
B	18.1	+0.02	X	3.7	−0.02
D	23.12	+0.01	U	0.2	+0.02
E	2.67	+0.01	Y	10	+0.05
F	6.8	+0.02	Z	0.5	+0.05
J	0.4	±0.05	a	19.0	±0.01
K_1 (Note 1)	16.3	+0.02	b	17.0	±0.01
K_2 (Note 2)	15.75	+0.02	c	0.5	±0.1
L_1 (Note 1)	13.9	+0.02	r_4	0.15	±0.05
L_2 (Note 2)	13.35	+0.02	α (degrees)	35°	±1°
M	23.0	+0.02	β (degrees)	20°	±1°
N_1 (Note 1)	0.5	–	γ (degrees)	35°	±1°
N_2 (Note 2)	21.0	–	δ (degrees)	45°	±1°
P	21.0	+0.02 −0			
R	B/2	–			

NOTES

1 Dimensions K_1 and L_1 are measured at distance N_1 below the reference plane.

2 Dimensions K_2 and L_2 are measured at distance N_2 below the reference plane.

Purpose

To check maximum insertion force and maximum withdrawal force.

For details of GX23 lampholders, see ANSI C81.62, Standard Sheet 2-476.

Testing

Measure the necessary force to fully insert the gauge into a lampholder. Measure the force necessary to withdraw the gauge.

Copyright National Electrical Manufacturers Association
Provided by IHS under license with NEMA
No reproduction or networking permitted without license from IHS
Not for Resale

Gauge "C" for Checking Minimum Retention Force in GX23 Lampholders

The drawing is intended only to illustrate the essential dimensions of the gauge.

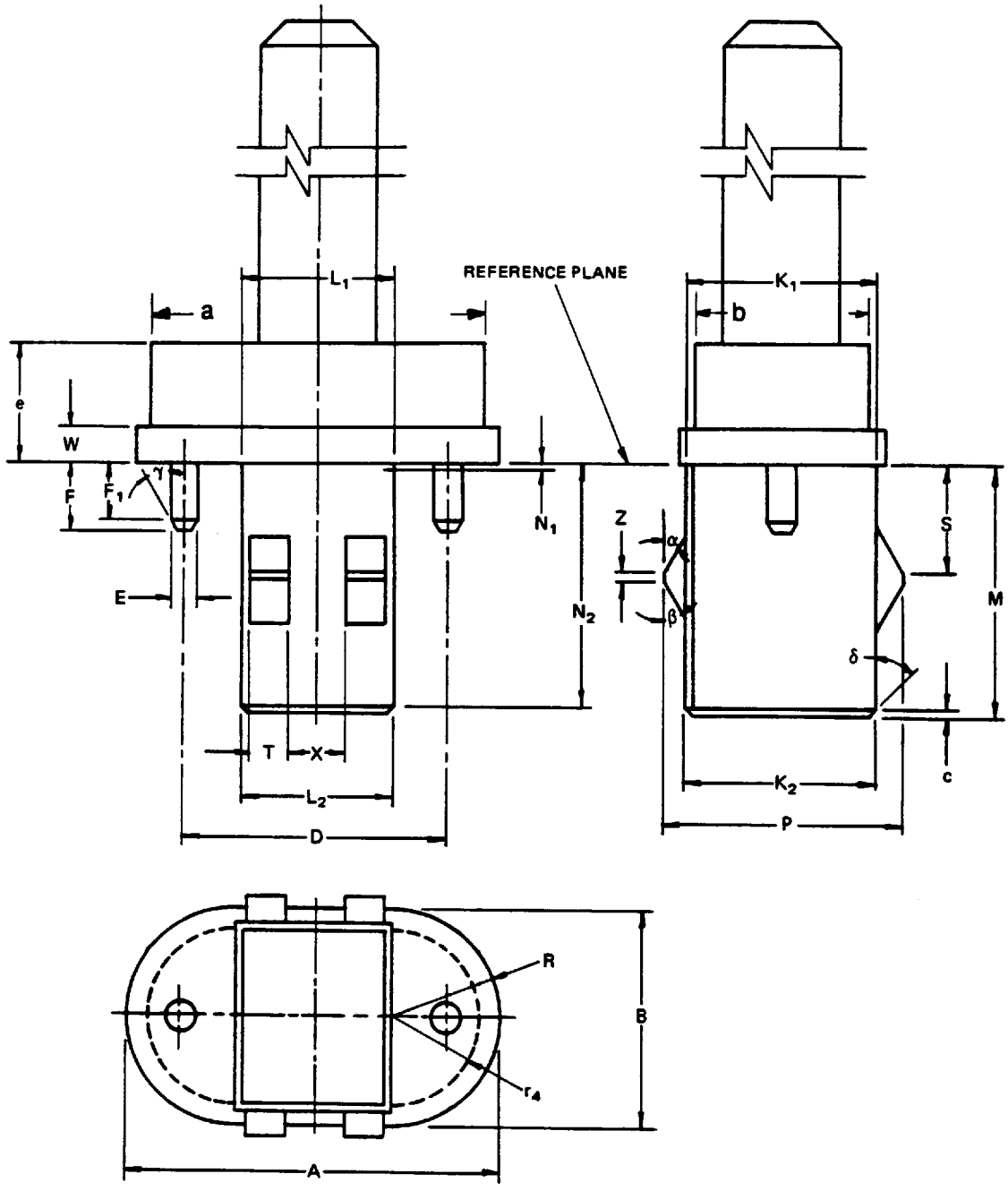

SURFACE FINISH: 0.4 μm, FOR THE PARTS BELOW THE REFERENCE PLANE

Copyright National Electrical Manufacturers Association
Provided by IHS under license with NEMA
No reproduction or networking permitted without license from IHS
Not for Resale

ANSI C81.63-1991
Std Sheet 3-483-1

Reference	Standard dimension mm	Tolerance mm	Reference	Standard dimension mm	Tolerance mm
A	31.5	−0.02	S	9.15	+0.02
B	17.7	−0.02	T	3.5	−0.02
D	23.0	±0.01	W	3.0	−0.05
E	2.29	−0.01	X	5.2	±0.01
F	6.0	−0.02	Z	0.5	−0.05
F_1	5.5	−0.05	a	28.8	±0.5
K_1 (Note 1)	16.15	−0.02	b	15	±0.5
K_2 (Note 2)	15.6	−0.02	c	0.6	±0.1
L_1 (Note 1)	13.75	−0.02	d	0.8	+0.5
L_2 (Note 2)	13.2	−0.02	r_4	b/2	–
M	21.8	−0.02	α (degrees)	35°	±1°
N_1 (Note 1)	0.5	–	β (degrees)	30°	±1°
N_2 (Note 2)	21.0	–	γ (degrees)	30°	±1°
P	20.6	−0.02	δ (degrees)	45°	±1°
R	B/2	–			

NOTES

1 Dimensions K_1 and L_1 are measured at distance N_1 below the reference plane.

2 Dimensions K_2 and L_2 are measured at distance N_2 below the reference plane.

Purpose

To check the minimum retention force related to pin and center post dimensions of a minimum-sized base.

For details and force requirements of GX23 lampholders, see ANSI C81.62, Standard Sheet 2-476.

Testing

After the gauge has been inserted into the lampholder, measure the force necessary to withdraw it.

Copyright National Electrical Manufacturers Association
Provided by IHS under license with NEMA
No reproduction or networking permitted without license from IHS
Not for Resale

Single Pin Gauge "D" for Checking Maximum Withdrawal Force of Contacts in 2G7, 2GBX7, 2G11, G23, GX23, G24, G32 and GX32 Lampholders

ANSI C81.63b-1994
Std. Sheet 3-486-3

This drawing is intended only to illustrate the essential dimensions of the gauge.

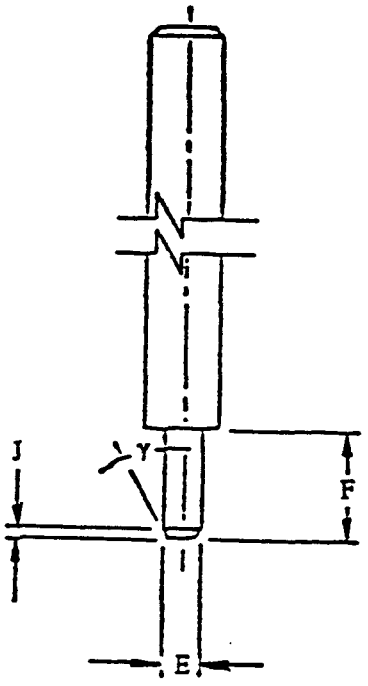

Reference	Dimension (Millimeters)	Tolerance (Millimeters)
E	2.67	+0.01
F	6.8	+0.01
J	0.4	±0.05
Y	30°	±1°

Purpose

To check the maximum withdrawal force related to maximum base pin dimensions in the individual contacts of 2G7, 2GX7, 2G11, G23, GX23, G24, G32 and GX32 lampholders. For details of lampholders, see ANSI C81.62 Standard Sheets 2-351, 2-352, 2-393, 2-475, 2-476, 2-493, 2-506.

Testing

After the gauge has been fully inserted into one of the lampholder contacts, measure the force necessary to withdraw it.

The test shall be repeated on the other contact(s).

Copyright National Electrical Manufacturers Association
Provided by IHS under license with NEMA
No reproduction or networking permitted without license from IHS
Not for Resale

Single Pin Gauge "E" for Checking Minimum Retention Force of Contact in 2G7, 2GX7, 2G11, F23, GX23, G24, G32, and GX32 Lampholders

This drawing is intended only to illustrate the essential dimensions of the gauge.

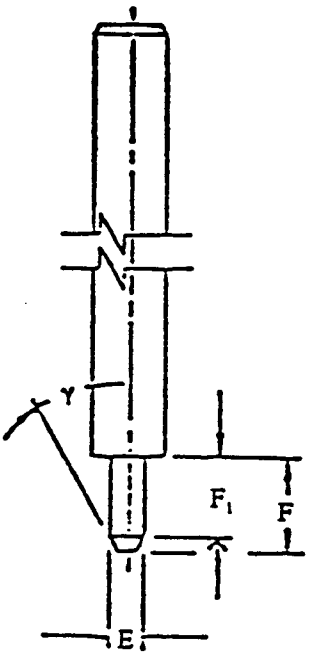

Reference	Dimension (Millimeters)	Tolerance (Millimeters)
E	2.29	-0.01
F	6.0	-0.02
F_1	5.5	-0.05
γ	30°	±1°

Copyright National Electrical Manufacturers Association
Provided by IHS under license with NEMA
No reproduction or networking permitted without license from IHS
Not for Resale

Purpose

To check the minimum retention force related to minimum base pin dimensions in the individual contacts of 2G7, 2GX7, 2G11, G23, GX23, G24, G32 and GX32 lampholders. For details of lampholders, see ANSI C81.62 Standard Sheets 2-351, 2-352, 2-393, 2-475, 2-476, 2-493, 2-506.

Testing

Fully insert the gauge into one of the lampholder contacts. Measure the force necessary to withdraw it.

The test shall be repeated on the other contact(s).

Copyright National Electrical Manufacturers Association
Provided by IHS under license with NEMA
No reproduction or networking permitted without license from IHS
Not for Resale

"Go" and "Not-Go" Gauges for G24d and G24q Bases on Finished Lamps

The drawings are intended only to illustrate the essential dimensions of the gauges.

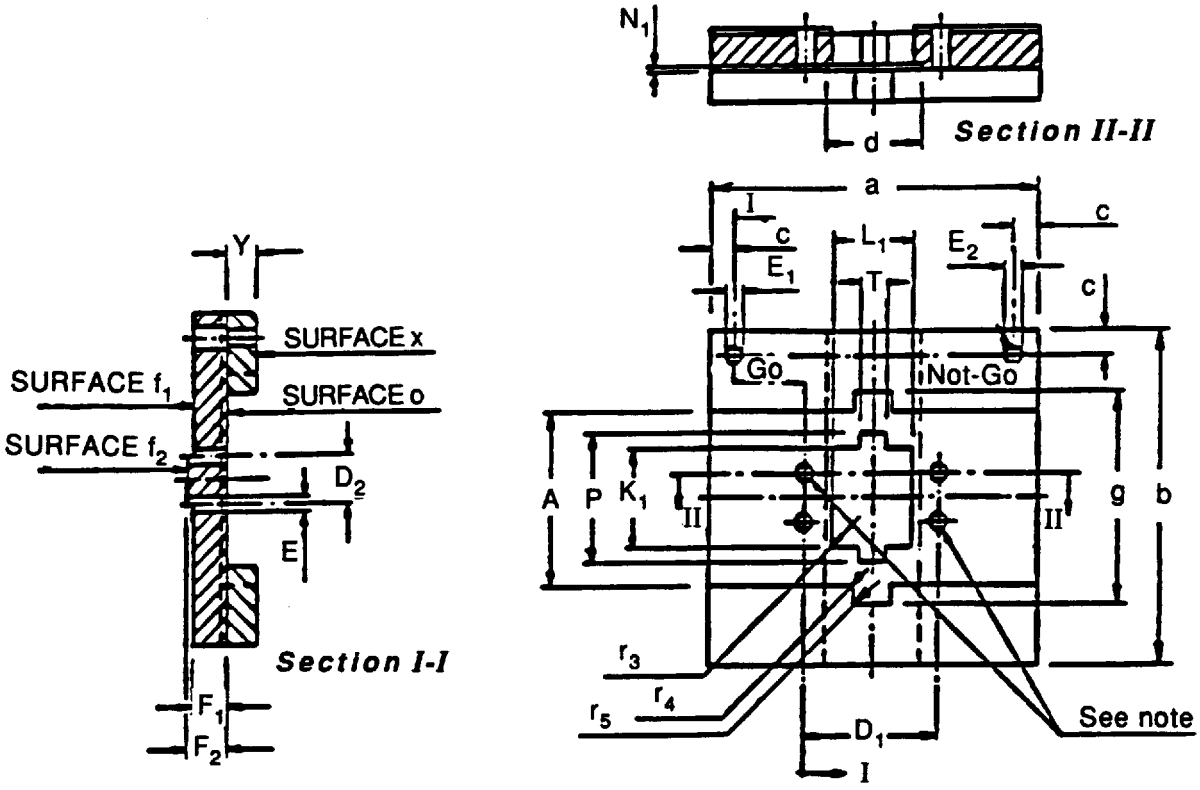

Figure 1 – Gauge for checking G24q-1 base

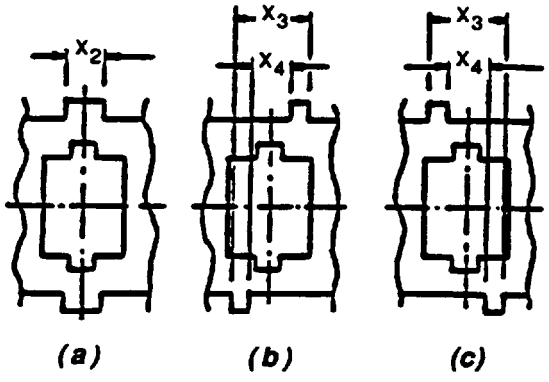

Figure 2 – Specific gauge designs for checking G24d-... and G24q-... bases (views at surface x)

Copyright National Electrical Manufacturers Association
Provided by IHS under license with NEMA
No reproduction or networking permitted without license from IHS
Not for Resale

Table 1

Designation	See figure	Reference	Dimension mm	Tolerance mm
G24d-1	2(a)	X_2	6.6	+0.01
G24q-1	2(a)	X_2	6.6	+0.01
G24d-2	2(b)	X_3	12.4	−0.01
G24q-2	2(b)	X_4	6.2	−0.01
G24d-3	2(c)	X_3	12.4	+0.01
G24q-3	2(c)	X_4	6.2	−0.01

Table 2

Reference	Dimension mm	Tolerance mm
A	28.5	+0.05
D_1	23.0	±0.005
D_2	8.0	±0.005
E	2.79	+0.01
E_1	2.67	+0.01
E_2	2.29	−0.01
F_1	6.0	−0.025
F_2	6.8	+0.025
K_1	16.3	+0.01
L_1	13.9	+0.01
N_1	0.5	+0.01
P	21.0	+0.01
T	4.7	+0.01
Y	5.5	+0.1
a	55.0	±0.5
b	55.0	±0.5
c	4.0	−0.2
d	16.0	±0.1
g	33.5	±0.1
r_3	0.5	±0.05
r_4	0.2	±0.05
r_5	0.2	±0.05

NOTE – These holes are for checking G24q-1, G24q-2, and G24q-3 bases only, and are not used to check G24d-type bases.

Copyright National Electrical Manufacturers Association
Provided by IHS under license with NEMA
No reproduction or networking permitted without license from IHS
Not for Resale

Purpose
To check the maximum base outline with respect to the dimension K_1 max, L_1 max, P max, r_3 min, r_4 max, r_5 min, and the dimensions F min, F max, E min, E max, the combined displacement and diameter of the pins and the combined displacement and width of the keys of bases.

For details of G24d and G24q bases, see ANSI C81.61, Standard Sheet 1-493.

Testing
Attempt to insert the center post and the pins of the base into the gauge at surface o. When inserted, check for contact between the reference plane of the base and surface o of the gauge.

In this position, check the relationship of the pin ends with surfaces F_1 and F_2.

Attempt to insert each pin into holes E_1 and E_2.

Copyright National Electrical Manufacturers Association
Provided by IHS under license with NEMA
No reproduction or networking permitted without license from IHS Not for Resale

Plug Gauges "A" for Checking Maximum Insertion and Withdrawal Forces in G24d and G24q Lampholders

The drawings are intended only to illustrate the essential dimensions of the gauges.

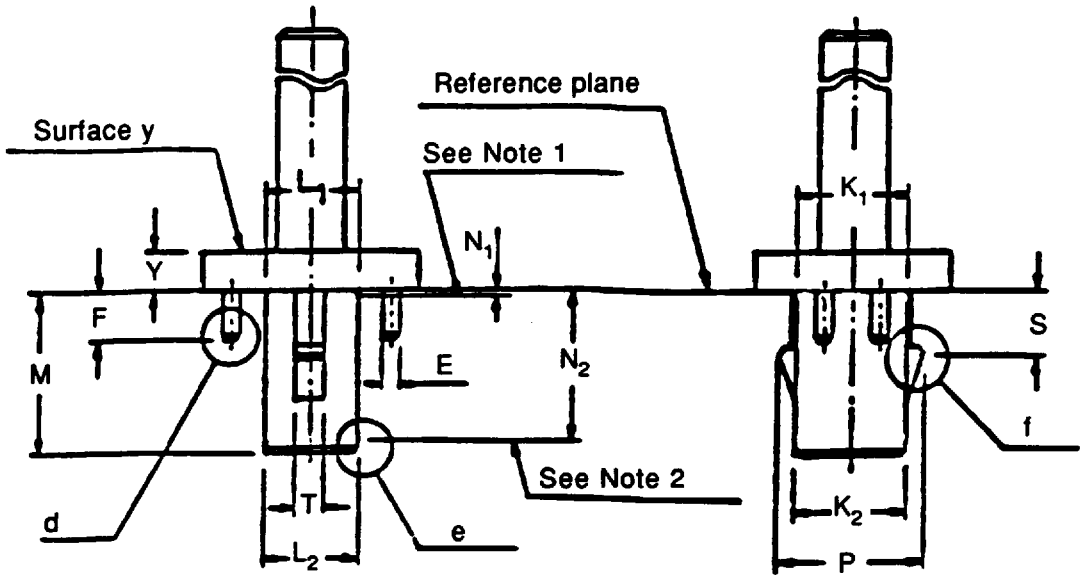

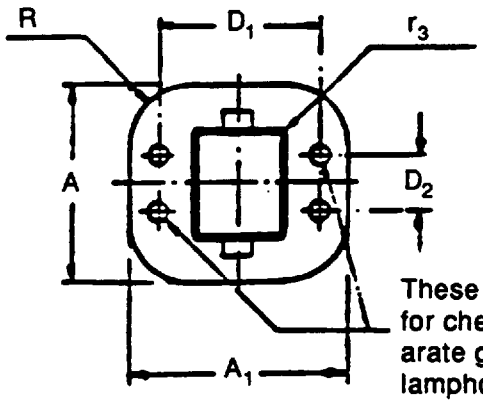

Surface finish 0.4 µm for the parts below the reference plane.

These pins are not present in the gauge for checking G24d-... lampholders. A separate gauge is required for checking this lampholder

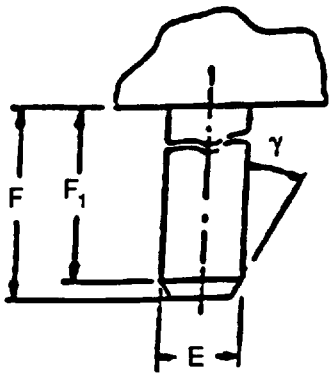

Detail d

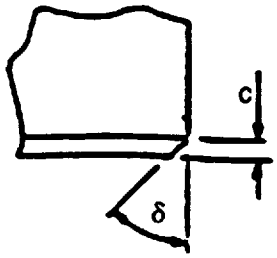

Detail e

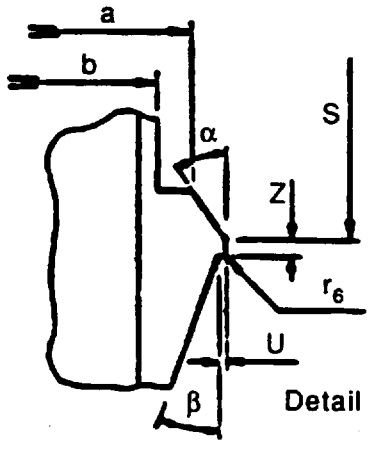

Detail f

Copyright National Electrical Manufacturers Association
Provided by IHS under license with NEMA
No reproduction or networking permitted without license from IHS
Not for Resale

Reference	Dimension mm	Tolerance mm
A	28.5	+0.02
A_1	31.0	+0.02
D_1	23.14	±0.005
D_2	8.14	±0.005
E	2.67	+0.01
F	6.8	+0.02
F_1	6.4	+0.05
K_1 (Note 1)	16.3	+0.02
K_2 (Note 2)	15.75	+0.02
L_1 (Note 1)	13.9	+0.02
L_2 (Note 2)	13.35	+0.02
M	23.0	+0.02
N_1 (Note 1)	0.5	–
N_2 (Note 2)	21.0	–
P	21.0	+0.02
R	8.4	–0.05
S	8.85	–0.02
T	4.7	+0.02
U	0.2	+0.02
Y	5.5	+0.05
Z	0.5	+0.05
a	19.0	±0.01
b	17.0	±0.01
c	0.5	+0.1
r_3	0.5	±0.05
r_6	0.15	±0.05
α (degrees)	35°	±1°
β (degrees)	20°	±1°
γ (degrees)	35°	±1°
δ (degrees)	45°	±1°

NOTES

1 Dimensions K_1 and L_1 are measured at distance N_1 from the reference plane.

2 Dimensions K_2 and L_2 are measured at distance N_2 from the reference plane.

Copyright National Electrical Manufacturers Association
Provided by IHS under license with NEMA
No reproduction or networking permitted without license from IHS
Not for Resale

Purpose
To check dimension Y max, and the maximum insertion and withdrawal forces related to maximum base with regard to maximum pin diameter and maximum pin length at maximum spacing and center post dimensions in lampholders.

For details of G24d and G24q lampholders, see ANSI C81.62, Standard Sheet 2-493.

Testing
Insert the proper gauge into the relevant lampholder while measuring the insertion force. Check the relationship of the lampholder rim to gauge surface y.

Measure the force necessary to withdraw the gauge.

Copyright National Electrical Manufacturers Association
Provided by IHS under license with NEMA
No reproduction or networking permitted without license from IHS
Not for Resale

Plug Gauges "B" for Checking Maximum Insertion Force in G24d and G24q Lampholders

The drawings are intended only to illustrate the essential dimensions of the gauge.

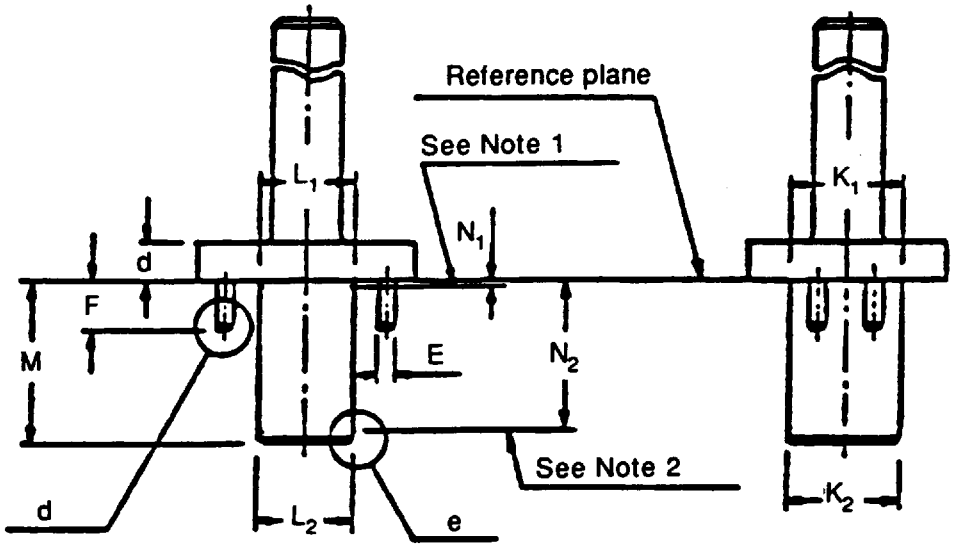

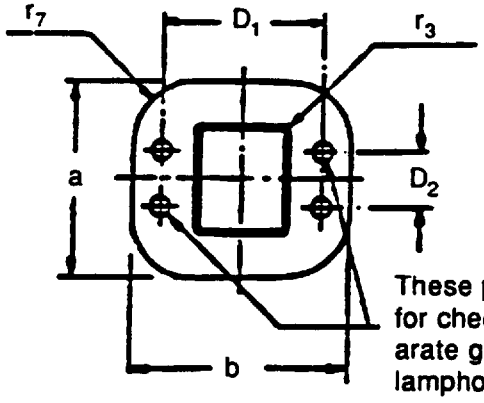

Surface finish 0.4 µm for the parts below the reference plane.

These pins are not present in the gauge for checking G24d-... lampholders. A separate gauge is required for checking this lampholder

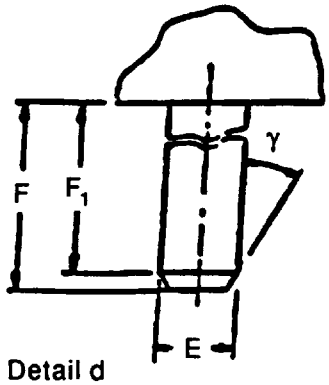

Detail d

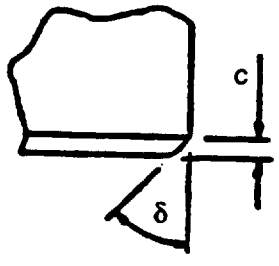

Detail e

Copyright National Electrical Manufacturers Association
Provided by IHS under license with NEMA
No reproduction or networking permitted without license from IHS
Not for Resale

Reference	Dimension mm	Tolerance mm
D_1	22.86	±0.005
D_2	7.86	±0.005
E	2.67	+0.01
F	6.8	+0.02
F_1	5.5	−0.05
K_1 (Note 1)	16.3	+0.02
K_2 (Note 2)	15.75	+0.02
L_1 (Note 1)	13.9	+0.02
L_2 (Note 2)	13.35	+0.02
M	23.0	+0.02
N_1 (Note 1)	0.5	–
N_2 (Note 2)	21.0	–
a	27.0	±0.2
b	30.0	±0.2
c	0.5	±0.1
d	8.0	±0.5
r_3	0.5	±0.05
r_7	9.0	±0.2
γ (degrees)	35°	±1°
δ (degrees)	45°	±1°

NOTES

1 Dimension K_1 and L_1 measured at distance N_1 from the reference plane.

2 Dimension K_2 and L_2 measured at distance N_2 from the reference plane.

Purpose

To check the maximum insertion force related to the dimensions of a base having maximum pin diameter and maximum pin length at minimum spacing.

For details of G24d and G24q lampholders, see ANSI C81.62, Standard Sheet 2-493.

Copyright National Electrical Manufacturers Association
Provided by IHS under license with NEMA
No reproduction or networking permitted without license from IHS
Not for Resale

Testing
Attempt to insert the proper gauge into the relevant lampholder while measuring the insertion force. Check for contact between the face of the lampholder and reference plane of the gauge.

Copyright National Electrical Manufacturers Association
Provided by IHS under license with NEMA
No reproduction or networking permitted without license from IHS
Not for Resale

Plug Gauges "C" for Checking Minimum Retention Force in G24d and G24q Lampholders

The drawings are intended only to illustrate the essential dimensions of the gauges.

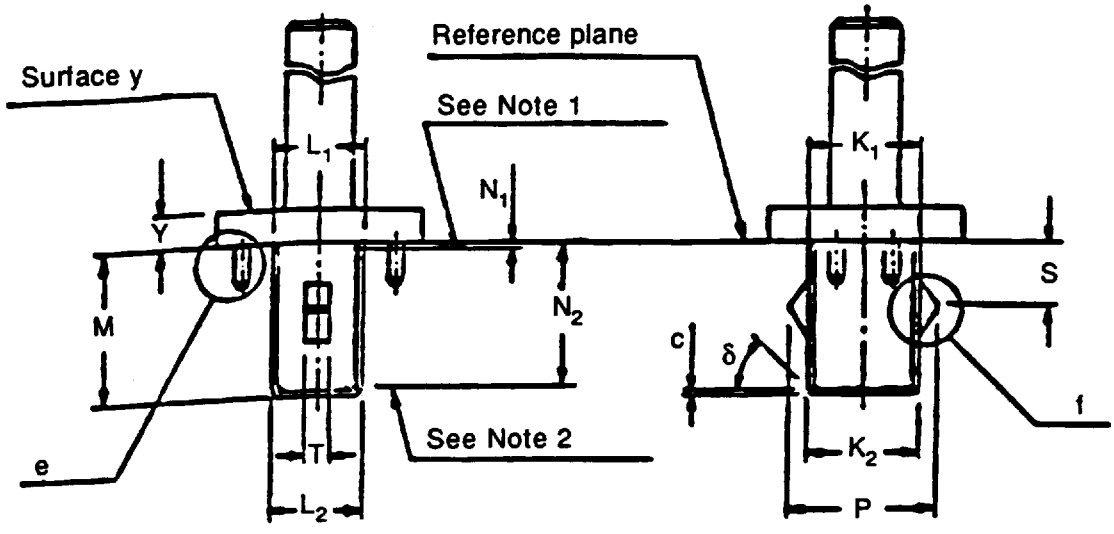

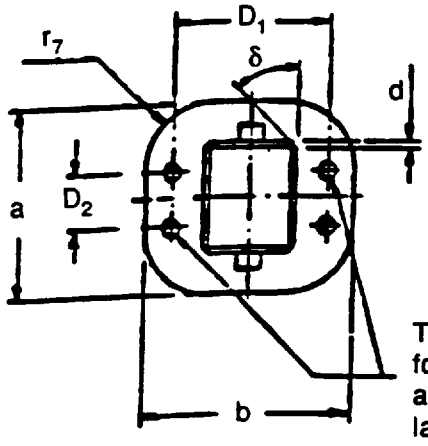

These pins are not present in the gauge for checking G24d-... lampholders. A separate gauge is required for checking this lampholder

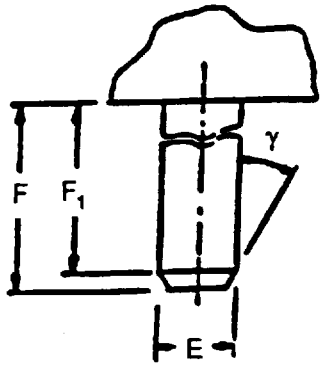

Detail e

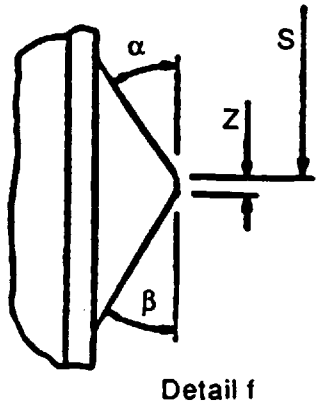

Detail f

Copyright National Electrical Manufacturers Association
Provided by IHS under license with NEMA
No reproduction or networking permitted without license from IHS
Not for Resale

Reference	Dimension mm	Tolerance mm
D_1	23.0	±0.005
D_2	8.0	±0.005
E	2.29	+0.01
F	6.0	–0.02
F_1	5.5	–0.05
K_1 (Note 1)	16.15	–0.02
K_2 (Note 2)	15.6	–0.02
L_1 (Note 1)	13.75	–0.02
L_2 (Note 2)	13.2	–0.02
M	21.8	–0.02
N_1 (Note 1)	0.5	–
N_2 (Note 2)	21.0	–
P	20.6	–0.02
S	9.15	+0.02
T	3.5	–0.02
Y	5.0	+0.02
Z	0.5	–0.05
a	27.0	±0.2
b	30.0	±0.2
c	0.6	±0.1
d	0.8	+0.1
r_7	9.0	±0.2
α (degrees)	35°	±1°
β (degrees)	30°	±1°
γ (degrees)	30°	±1°
δ (degrees)	45°	±1°

NOTES

1 Dimension K_1 and L_1 measured at distance N_1 from the reference plane.

2 Dimension K_2 and L_2 measured at distance N_2 from the reference plane.

Copyright National Electrical Manufacturers Association
Provided by IHS under license with NEMA
No reproduction or networking permitted without license from IHS
Not for Resale

Purpose
To check the dimension Y min and the minimum retention force related to a base having minimum pin diameter, minimum pin length, and minimum center post dimensions.

For details of G24d and G24q lampholders, see ANSI C81.62, Standard Sheet 2-493.

Testing
After fully inserting the gauge into a lampholder, measure the force necessary to withdraw it.

Copyright National Electrical Manufacturers Association
Provided by IHS under license with NEMA
No reproduction or networking permitted without license from IHS Not for Resale

Plug Gauges "F" for Checking Noninterchangeability of Bases in G24d and G24q Lampholders

The drawings are intended only to illustrate the essential dimensions of the gauges.

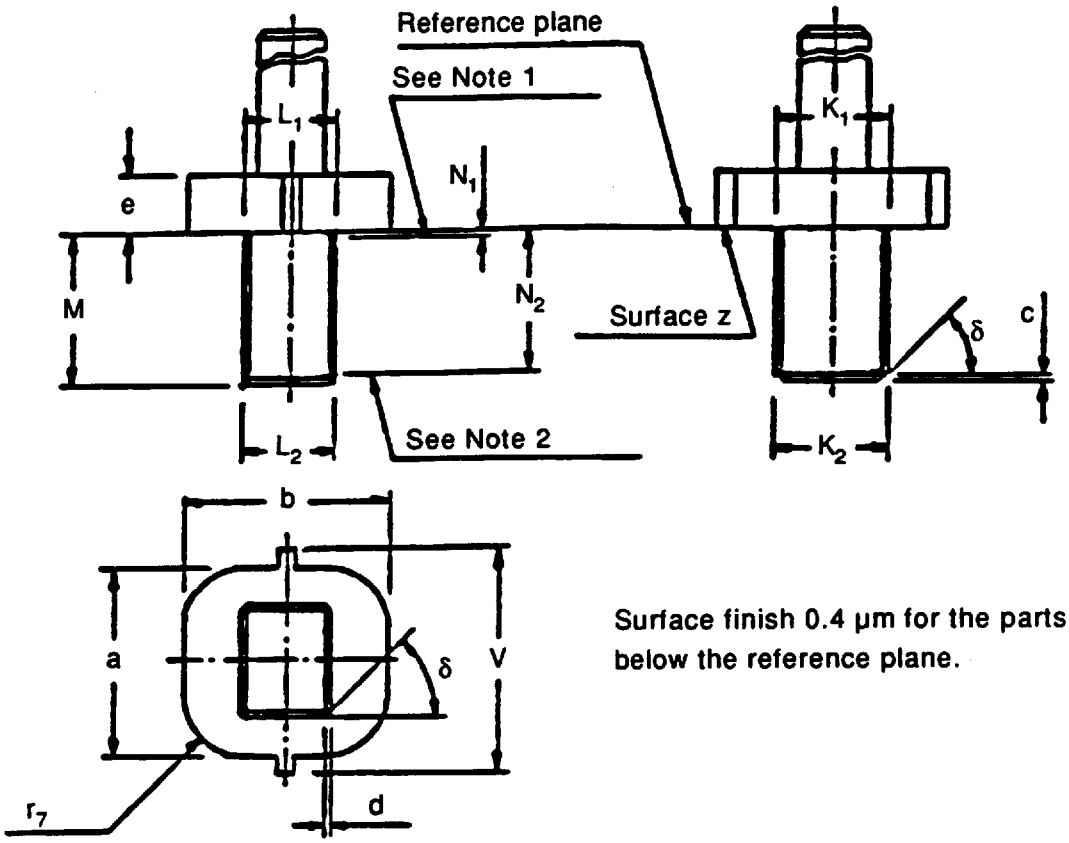

Surface finish 0.4 µm for the parts below the reference plane.

Figure 1 – "Not-Go" gauge for checking G24d-1 and G24q-1 lampholders

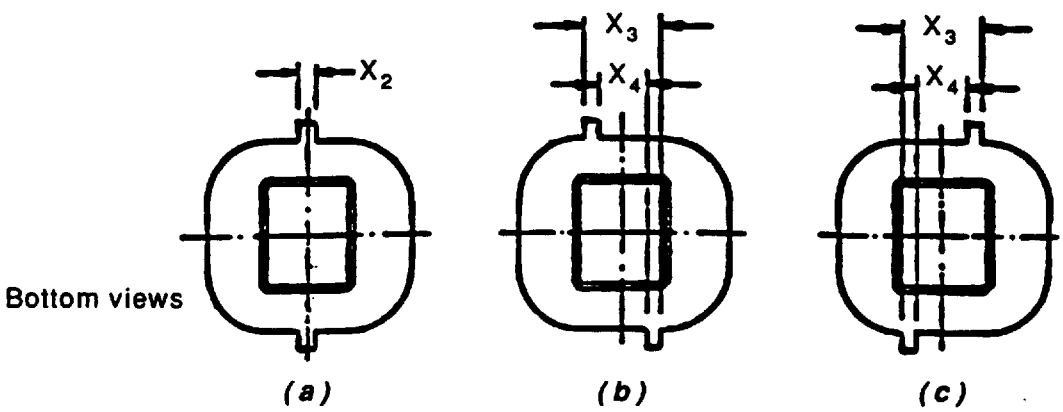

Figure 2 – Specific gauge designs for checking G24d-... and G24q-... lampholders

Copyright National Electrical Manufacturers Association
Provided by IHS under license with NEMA
No reproduction or networking permitted without license from IHS
Not for Resale

Table 1

Designation	See figure	Reference	Dimension mm	Tolerance mm
G24d-1	2(a)	X_2	2.5	−0.02
G24q-1	2(a)	X_2	2.5	−0.02
G24d-2	2(b)	X_3	11.2	−0.02
G24q-2	2(b)	X_4	7.4	+0.02
G24d-3	2(c)	X_3	11.2	−0.02
G24q-3	2(c)	X_4	7.4	+0.02

Table 2

Reference	Dimension mm	Tolerance mm
K_1 (Note 1)	16.15	−0.02
K_1 (Note 2)	15.6	−0.02
L_1 (Note 1)	13.75	−0.02
L_2 (Note 2)	13.2	−0.02
M	21.8	−0.02
N_1 (Note 1)	0.5	–
N_2 (Note 2)	21.0	–
V	32.0	−0.02
a	27.0	±0.2
b	30.0	±0.2
c	0.6	±0.1
d	0.8	+0.1
e	8.0	±0.5
r_7	9.0	±0.2
δ (degrees)	45°	±1°

NOTES

1 Dimensions K_1 and L_1 are measured at distance N_1 from the reference plane.

2 Dimensions K_2 and L_2 are measured at distance N_2 from the reference plane.

Copyright National Electrical Manufacturers Association
Provided by IHS under license with NEMA
No reproduction or networking permitted without license from IHS
Not for Resale

Purpose
When attempting to insert gauges with bases G24d-1, G24d-2, G24d-3, G24q-1, G24q-2, G24q-3 with nonsimilar designation (digit behind hyphen) is prevented.

For details of G24d and G24q lampholders, see ANSI C81.62, Standard Sheet 2-493.

Testing
When inserting gauges with nonsimilar designations into the lampholder, check the relationship of gauge surface z with the rim of the lampholder.

Copyright National Electrical Manufacturers Association
Provided by IHS under license with NEMA
No reproduction or networking permitted without license from IHS
Not for Resale

"Go" Gauges "G" for Checking Key Slots in G24d and G24q Lampholders

The drawings are intended only to illustrate the essential dimensions of the gauges.

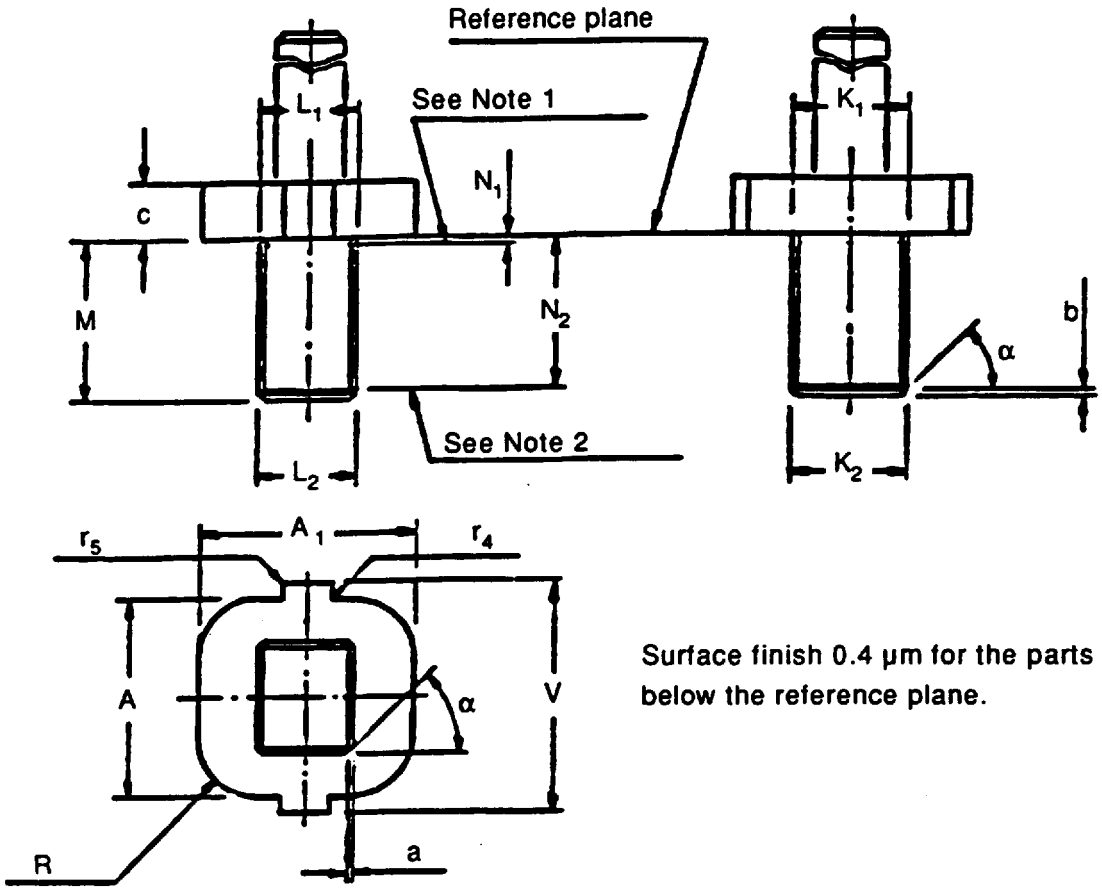

Surface finish 0.4 µm for the parts below the reference plane.

Figure 1 – "Go" gauge for checking lampholders G24d-1 and G24q-1

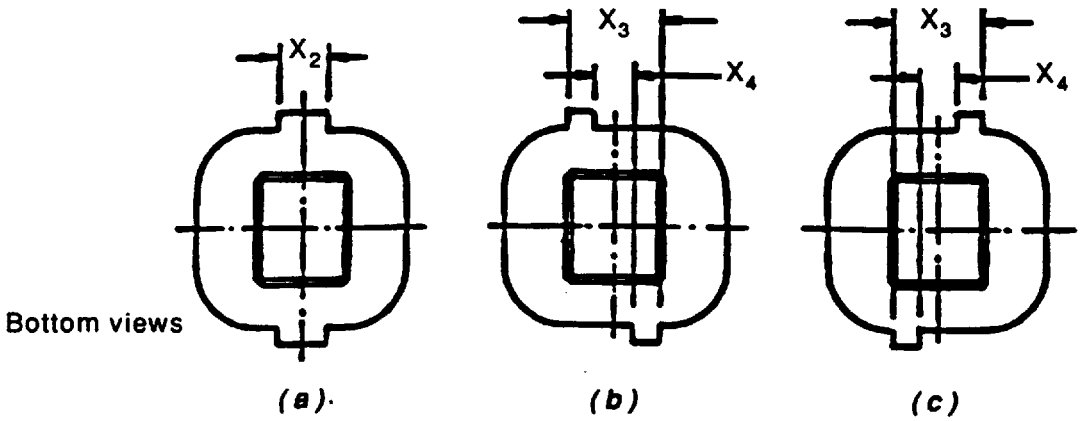

Figure 2 – Specific gauge designs for checking G24d-... and G24q-... lampholders

Copyright National Electrical Manufacturers Association
Provided by IHS under license with NEMA
No reproduction or networking permitted without license from IHS
Not for Resale

Table 1

Designation	See figure	Reference	Dimension mm	Tolerance mm
G24d-1	2(a)	X_2	7.2	−0.02
G24q-1	2(a)	X_2	7.2	−0.02
G24d-2	2(b)	X_3	13.0	−0.02
G24q-2	2(b)	X_4	5.6	+0.02
G24d-3	2(c)	X_3	13.0	−0.02
G24q-3	2(c)	X_4	5.6	+0.02

Table 2

Reference	Dimension mm	Tolerance mm
A	28.5	+0.02
A_1	31.0	+0.02
K_1 (Note 1)	16.3	+0.02
K_2 (Note 2)	15.75	+0.02
L_1 (Note 1)	13.9	+0.02
L_2 (Note 2)	13.35	+0.02
M	23.0	+0.02
N_1 (Note 1)	0.5	–
N_2 (Note 2)	21.0	–
R	8.4	−0.05
V	33.0	+0.02
a	1.0	±0.1
b	0.5	+0.1
c	8.0	±0.5
r_4	0.2	±0.05
r_5	0.2	±0.05
α (degrees)	45°	±1°

NOTES

1 Dimensions K_1 and L_1 are measured at distance N_1 from the reference plane.

2 Dimensions K_2 and L_2 are measured at distance N_2 from the reference plane.

Copyright National Electrical Manufacturers Association
Provided by IHS under license with NEMA
No reproduction or networking permitted without license from IHS
Not for Resale

Purpose
To check the smooth acceptance of the keys of the relevant bases in G24d and G24q lampholders.

For details of G24d and G24q lampholders, see ANSI C81.62, Standard Sheet 2-493.

Testing
Measure the insertion force while attempting to insert the relevant gauge into the lampholder. Check the relationship of the reference plane of the gauge with that of the lampholder.

Copyright National Electrical Manufacturers Association
Provided by IHS under license with NEMA
No reproduction or networking permitted without license from IHS
Not for Resale

"Go" and "Not-Go" Gauges for G32 and GX32 Bases on Finished Lamps

The drawings are intended only to indicate the essential dimensions of the gauges.

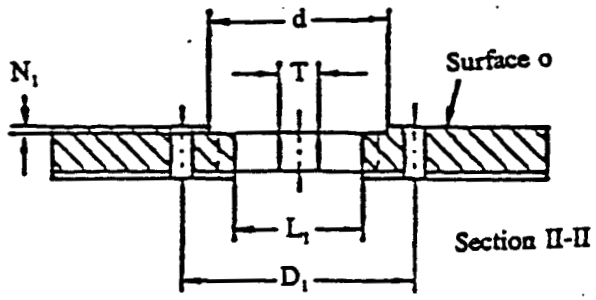

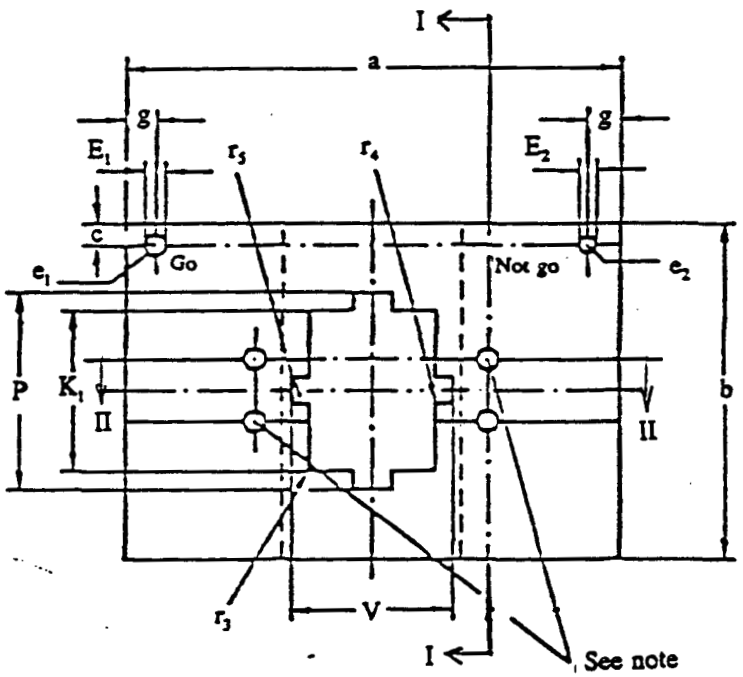

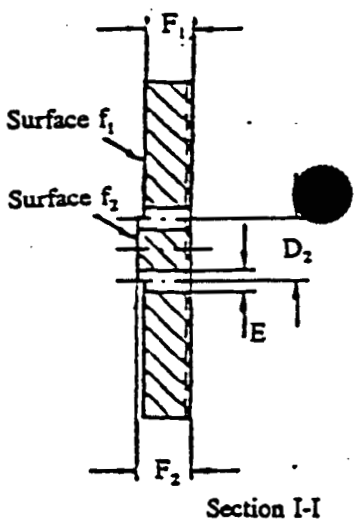

Fig. 1

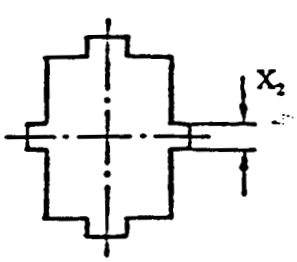

Fig. 2

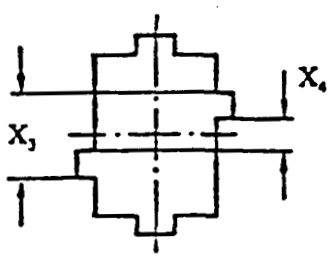

Fig. 3

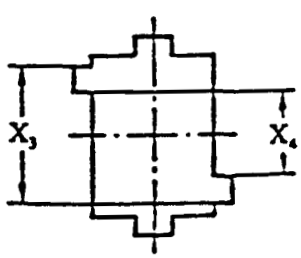

Fig. 4

Views at surfaces f_1 and f_2

NOTE —These holes should be neglected when checking G32d-1, 2, 3, 4, 5 or GX32d-1, 2, 3, 4, 5 bases.

NOTE — Only the gauge for checking G32d-1, G32q-1, GX32d-1 and GX323q-1 bases is shown. Separate gauges are required for checking G32d/G32q-2, 3, 4, 5 and GX32d/GX32q-2, 3, 4, 5 bases.

Copyright National Electrical Manufacturers Association
Provided by IHS under license with NEMA
No reproduction or networking permitted without license from IHS
Not for Resale

Reference	Standard Dimensions (mm)	Tolerance (mm)	Reference	Standard Dimensions (mm)	Tolerance (mm)
D_1	31.00	+0.005 -0.005	T	4.7	+0.01
D_2	8.0	+0.005 -0.005	V	21.2	+0.01
E	2.79	+0.01	a	66	+0.5 -0.5
E_1	2.67	+0.01	b	46	+0.5 -0.5
E_2	2.29	-0.01	c	3	-0.2
F_1	6.0	-0.025	d	24	+0.1 -0.1
F_2	6.8	+0.025	g	4	-0.1
K_1	21.95	+0.01	r_3	0.5	+0.05 -0.05
L_1	16.35	+0.01	r_4	0.2	+0.05 -0.05
M_1	0.5	+0.01	r_5	0.2	+0.05 -0.05
P	26.7	+0.01			

Copyright National Electrical Manufacturers Association
Provided by IHS under license with NEMA
No reproduction or networking permitted without license from IHS
Not for Resale

Designation	See Figure	Reference	Standard Dimensions (mm)	Tolerance (mm)
G32d-1 G32q-1 GX32d-1 GX32q-1	2	X_2	3.6	+0.01
G32d-2 G32q-2	3	X_3	11.1	+0.01
GX32d-2 GX32q-2		X_4	3.9	-0.01
G32d-3 G32q-3	4	X_3	11.1	+0.01
G32d-3 GX32q-3		X_4	3.9	-0.01
G32d-4 G32q-4	3	X_3	18.6	+0.01
GX32d-4 GX32q-4		X_4	11.4	-0..01
G32d-5 G32q-5	4	X_3	18.6	+0.01
GX32d-5 GX32q-		X_4	11.4	-0.01

Purpose

To check the maximum base outline with respect to the dimensions $K_{1max.}$, $P_{max.}$, $T_{max.}$, $V_{max.}$, $f_{3min.}$, $r_{4max.}$, $r_{5min.}$ and the dimensions $E_{min.}$, $E_{max.}$, $F_{min.}$, $F_{max.}$, the combined displacement and diameter of the pins and the combined displacement and width of the keys of: G32d-1, 2, 3, 4, 5; G32q-1, 2, 3, 4, 5; GX32d-1, 2, 3, 4, 5; and GX32q-1, 2, 3, 4, 5 bases on finished lamps.

For details of G32 and GX32 bases, see ANSI C81.61 standard sheet 1-506.

Testing

Insert the base into the gauge at surface o until the reference plane of the base and surface o of the gauge are in contact. Check the position of ends of the pins with respect to surfaces f_1 and f_2 of the gauge.

Insert each, in turn, into hole e1 until the reference plane of the base and surface o of the gauge are in contact.

Attempt to insert each pin, in turn, into hole E_2 of the gauge.

Copyright National Electrical Manufacturers Association
Provided by IHS under license with NEMA
No reproduction or networking permitted without license from IHS
Not for Resale

Gauges "A1" for Checking Maximum Insertion Force and Maximum Withdrawal Force in G32d and G32q Lampholders

Two gauges are required for checking all keyway and pin arrangements; one for all G32d variations and another for all G32q variations.

The drawings are intended only to illustrate the essential dimensions of the gauge.

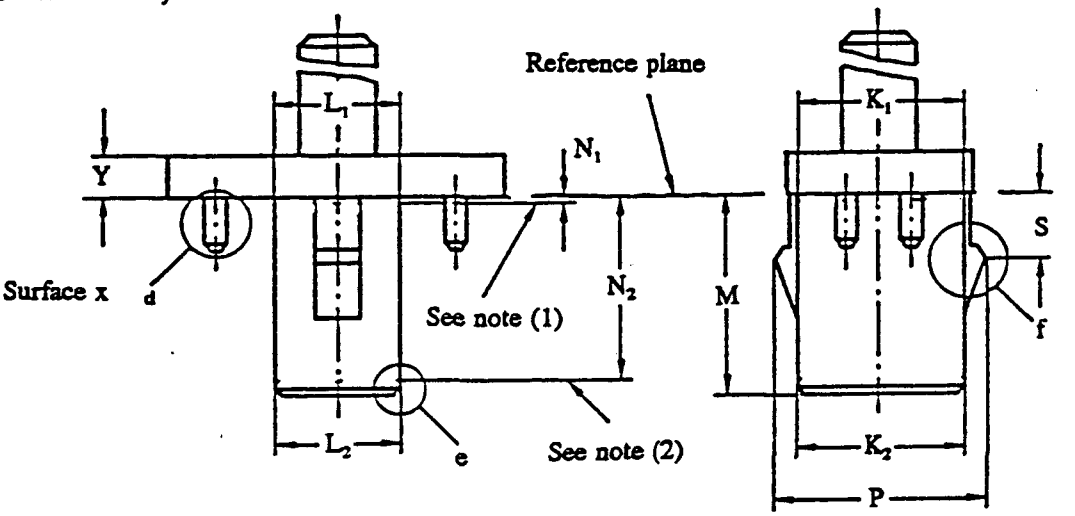

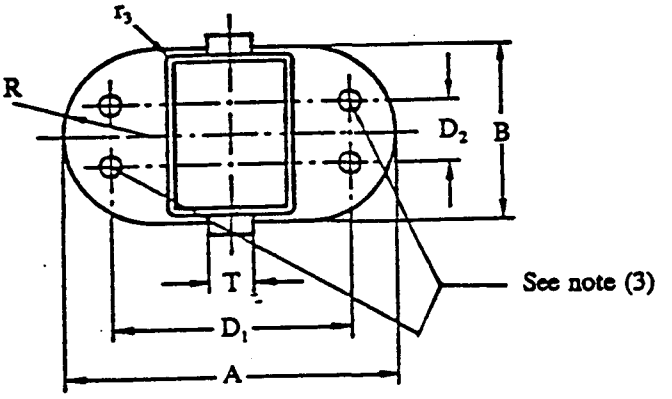

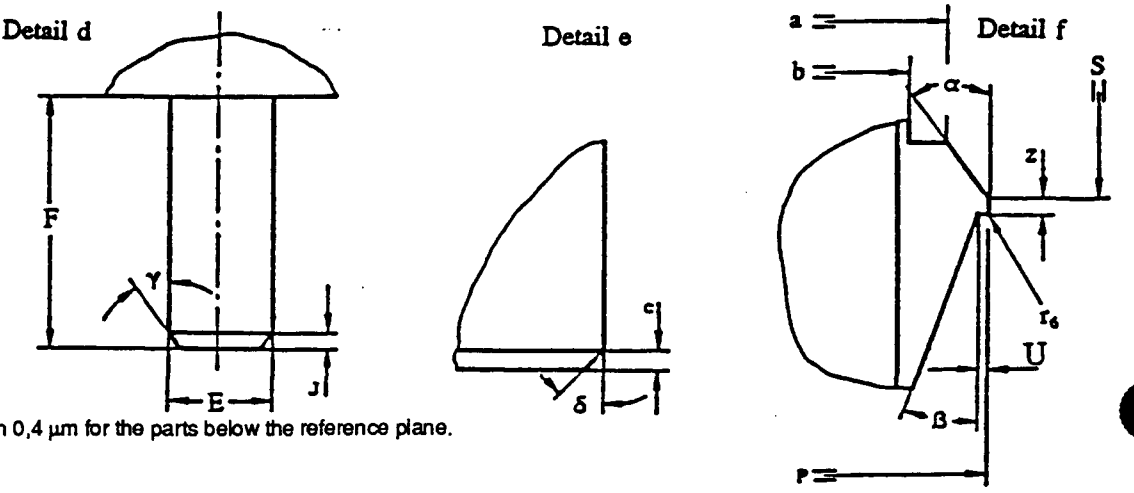

NOTE— Surface finish 0,4 μm for the parts below the reference plane.

Copyright National Electrical Manufacturers Association
Provided by IHS under license with NEMA
No reproduction or networking permitted without license from IHS
Not for Resale

Reference	Standard Dimensions	Tolerance	Reference	Standard Dimensions	Tolerance
A	44.2	-0.02	P	26.7	+0.02
B	23.9	-0.02	R	B/2	—
D_1	31.44	+0.005 -0.005	S	8.85	-0.02
D_2	8.44	+0.005 -0.005	T	5.5	+0.02
E	2.67	+0.01	U	0.2	+0.02
F	6.8	+0.02	Y	5.5	+0.05
F_1	5.5	+0.05 -0.05	Z	0.5	+0.05
J	0.4	+0.05 -0.05	a	24.7	+0.01 -0.01
K_1 (Note 1)	22.25	-0.02	b	22.7	+0.01 -0.01
K_2 (Note 2)	21.5	-0.02	c	0.5	0.1
L_1 (Note 1)	16.65	-0.02	r_3	0.5	+0.05 -0.05
L_2 (Note 2)	15.9	-0.02	r_6	0.15	+0.05 -0.05
M	26.5	+0.02	α	35°	+1° -1°
N_1 (Note 1)	0.5	—	b	20°	+1° -1°
N_2 (Note 2)	24.5		δ	45°	+1° -1°

NOTES

1 Dimensions K_1 and L_1 are measured at distance N1 from the reference plane.
2 Dimensions K_2 and L_2 are measured at distance N_2 from the reference plane.
3 These pins are not present in the Gauge for checking G32d-1, 2, 3, 4, 5 Lampholders.

Copyright National Electrical Manufacturers Association
Provided by IHS under license with NEMA
No reproduction or networking permitted without license from IHS
Not for Resale

Purpose

To check dimensions $A_{min.}$, $B_{min.}$, $K_{1min.}$, $K_{2min.}$, $L_{1min.}$, $L_{2min.}$ and the maximum insertion and withdrawal forces related to a G32d or G32q base having maximum pin diameter and maximum pin length at maximum pin spacing and maximum dimension P.

NOTE — Gauge A1 is not used for checking GX32d and GX32q lampholders; see gauge A2.

For details at G32d and G32q lampholders, see ANSI C81.62 standard sheet 2-506.

Testing

Insert the gauge into the lampholder until surface x of the gauge is in contact with surface x of the lampholder. Measure the insertion force. Withdraw the gauge while measuring the force.

Copyright National Electrical Manufacturers Association
Provided by IHS under license with NEMA
No reproduction or networking permitted without license from IHS
Not for Resale

Gauge "B" for Checking Maximum Insertion Force in G32d, G32q, GX32d and GX32q Lampholders

Two gauges are required; one for checking all variations of both G32d and GX32d lampholders, another for checking all variations of G32q and GX32q lampholders.

The drawings are intended only to illustrate the essential dimensions of the gauges.

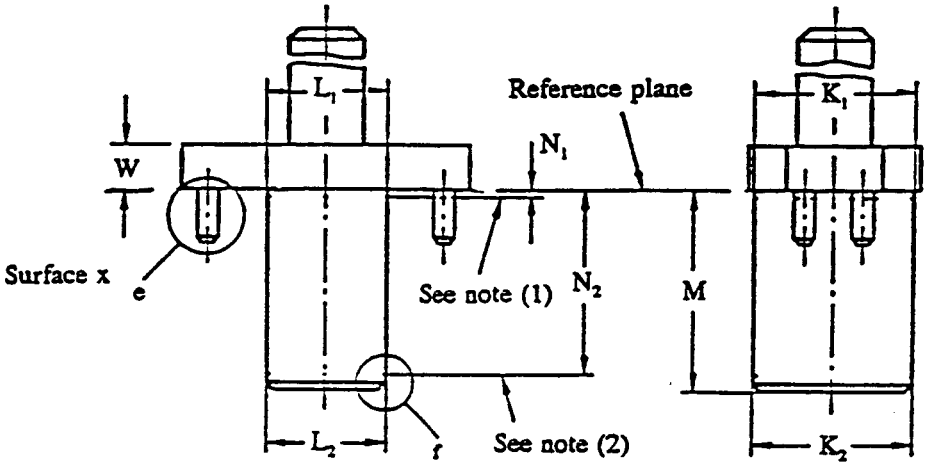

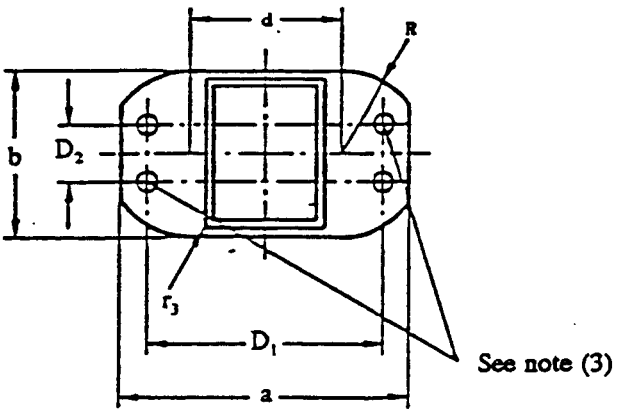

Surface finish 0,4 μm for the parts below the reference plane.

Detail e

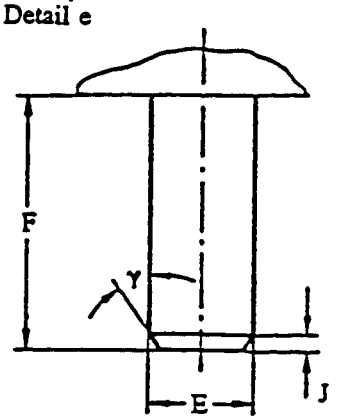

Detail f

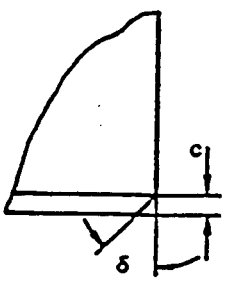

Copyright National Electrical Manufacturers Association
Provided by IHS under license with NEMA
No reproduction or networking permitted without license from IHS
Not for Resale

Reference	Standard Dimensions (mm)	Tolerance (mm)	Reference	Standard Dimensions (mm)	Tolerance (mm)
D_1	30.56	+0.005 -0.005	N_2 (Note 2)	24.5	—
D_2	7.56	+0.005 -0.005	R	b/2	—
E	2.67	+0.01	a	38	+0.05 -0.05
F	6.8	+0.02	b	22	+0.5 -0.5
J	0.4	+0.05 -0.05	c	0.5	+0.1 -0.1
K_1 (Note 1)	21.95	+0.02	d	20	+0.2 -0.2
K_2 (Note 2)	21.2	+0.02	r_3	0.5	+0.05 -0.05
L_1 (Note 1)	16.35	+0.02	w	6	+0-.05 -0.05
L_2 (Note 2)	15.6	+0.02	γ	35°	+1° -1°
M	26.5	+0.02	δ	35°	+1° -1°
N_1 (Note 1)	0.5	—			

NOTES

1 Dimensions K_1 and L_1 are measured at distance N_1 from the reference plane.
2 Dimensions K_2 and L_2 are measured at distance N_2 from the reference plane.
3 These pins are not present in the gauge for checking G32d-1, 2, 3, 4, 5 and GX2d-1, 2, 3, 4, 5 lampholders.

Copyright National Electrical Manufacturers Association
Provided by IHS under license with NEMA
No reproduction or networking permitted without license from IHS
Not for Resale

Purpose

To check the maximum insertion force of a base having maximum pin diameter and maximum pin length at minimum pin spacing in lampholders.

For details of G32d, G32q, GX32d and GX32q lampholders, see ANSI C81.62 standard sheet 2-506.

Testing

Insert the gauge into the lampholder until surface x is in contact with surface x of the lampholder. Measure the insertion force.

Copyright National Electrical Manufacturers Association
Provided by IHS under license with NEMA
No reproduction or networking permitted without license from IHS
Not for Resale

Gauge "C" for Checking Minimum Retention Force in G32d, G32q, GX32d and GX32q Lampholders

Two gauges are required; one for checking all variations of both G32d and GX32d lampholders, another for checking all variations of G32q and GX32q lampholders.

The drawings are intended only to illustrate the essential dimensions of the gauges.

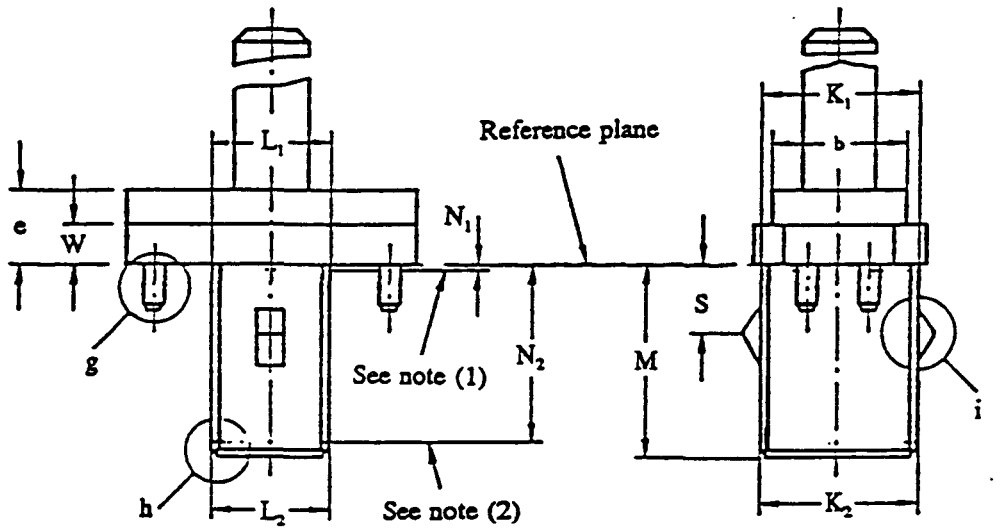

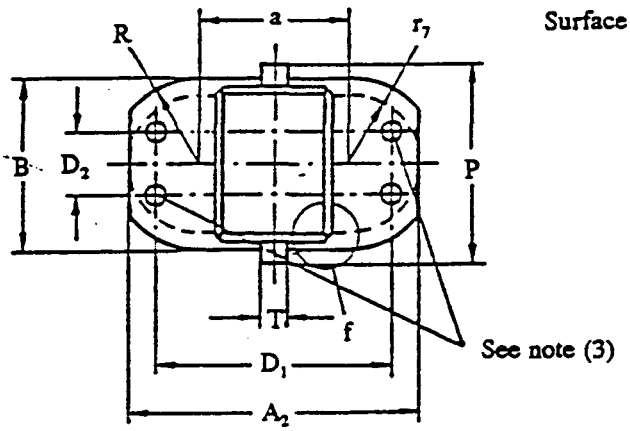

Surface finish 0,4 μm for the parts below the reference plane.

Detail f

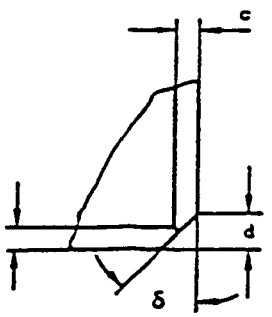

Detail g

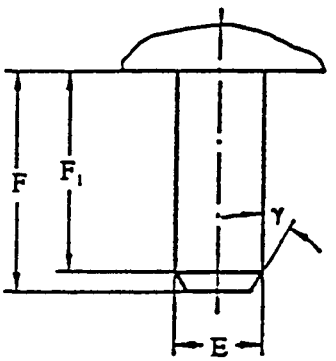

Detail h

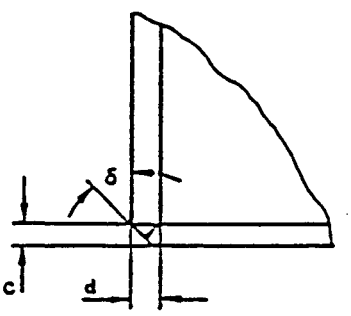

Detail i

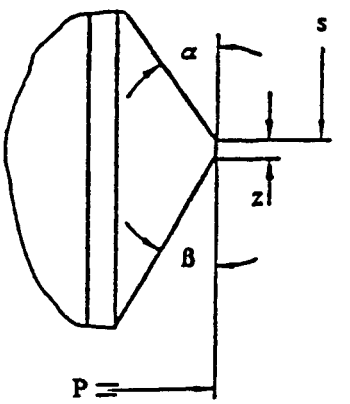

Copyright National Electrical Manufacturers Association
Provided by IHS under license with NEMA
No reproduction or networking permitted without license from IHS
Not for Resale

Reference	Standard Dimensions (mm)	Tolerance (mm)	Reference	Standard Dimensions (mm)	Tolerance (mm)
A_2	38.0	-0.1	R	B/2	—
B	23.2	-0.02	S	9.15	+0.02
D_1	31.00	+0.005 -0.005	T	3.5	-0.2
D_2	8.00	+0.005 -0.005	W	5.25	-0.05
E	2.29	-0.01	Z	0.5	-0.05
F	6.0	-0.02	a	20.0	+0.05 -0.05
F_1	5.5	-0.05	b	18	+0.5 -0.5
K_1 (Note 1)	21.8	-0.02	c	0.6	+0.1 -0.1
K_2 (Note 2)	21.05	-0.02	d	0.8	+0.1
L_1 (Note 1)	16.2	-0.02	e	10	+0.5 -0.5
L_2 (Note 2)	15.45	-0.02	r_7	b/2	—
M	25.3	-0.02	α	35°	+1° -1°
N_1 (Note 1)	0.5	—	β	30°	+1° -1°
N_2 (Note 2)	24.5	—	γ	30°	+1° -1°
P	26.3	-0.02	δ	45°	+1° -1°

NOTES

1 Dimensions K_1 and L_1 are measured at distance N_1 from the reference plane.
2 Dimensions K_2 and L_2 are measured at distance N_2 from the reference plane.
3 These pins are not present in the gauge for checking G32d-1, 2, 3, 4, 5 and GX32d-1, 2, 3, 4, 5 lampholders.

Copyright National Electrical Manufacturers Association
Provided by IHS under license with NEMA
No reproduction or networking permitted without license from IHS
Not for Resale

Purpose

To check the minimum retention force in a holder on a base having minimum pin diameter, minimum pin length and minimum dimension P at nominal pin spacings.

For details of G32d, G32q, GX32d and GX32q lampholders, see ANSI C82.62 standard sheet 2-506.

Testing

Insert the gauge into the lampholder to a fully seated position. Withdraw the gauge while measuring force.

Copyright National Electrical Manufacturers Association
Provided by IHS under license with NEMA
No reproduction or networking permitted without license from IHS
Not for Resale

"Not-Go" Gauges "F" for Checking Non-Interchangeability of G32d, G32q, GX32d and GX32q Bases in Lampholders

Three gauges are required:

— one for checking all variations of G32d-1, G32q-1, GX32d-1 and GX32q-1 lampholder

— one for checking all variations of G32d-2, 4; G32q-2, 4; GX32d-2, 4 and GX32q-2, 4 lampholders

— one for checking all variations of G32d-3, 5; G32q-3, 5; GX32d-3, 5 and GX32q-3, 5; GX32d-3, 5 and GX32q-3, 5 lampholders.

The drawings are intended only to illustrate the essential dimensions of the gauges.

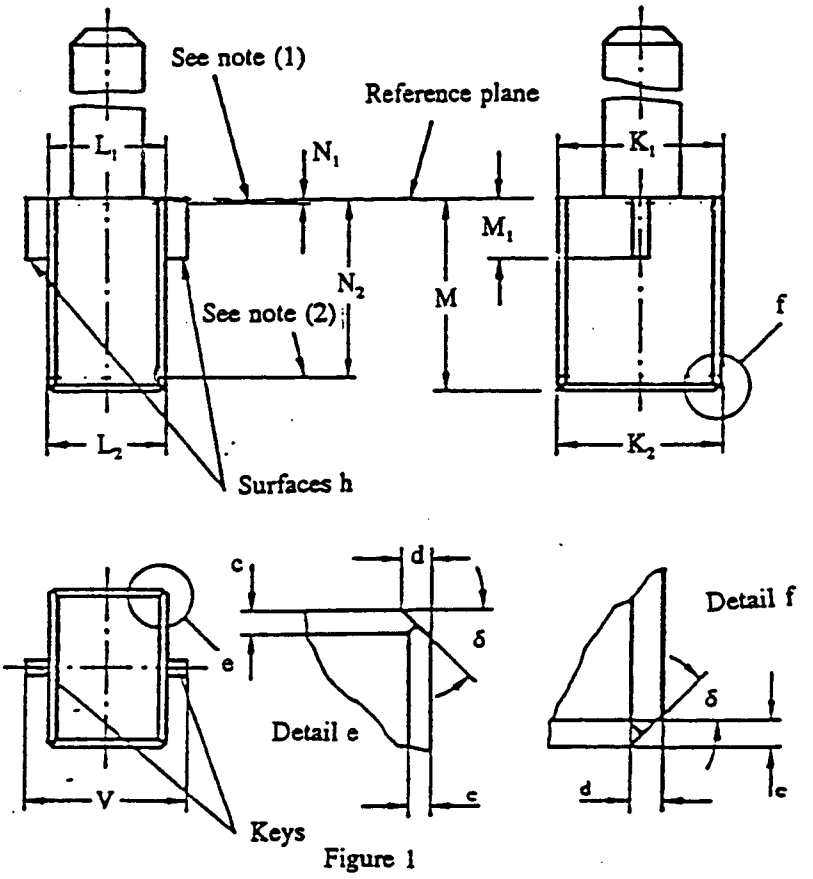

Figure 1

NOTE — Only the "Not-Go" gauge for checking lampholders other than G32d-1, G32q-1, GX32d-1, and *GX32q is shown.

Specific gauge designs required

Key configuration for checking G32d-.., G32q-.., GX32d-.., and *GX32q.. lampholders.

Copyright National Electrical Manufacturers Association
Provided by IHS under license with NEMA
No reproduction or networking permitted without license from IHS
Not for Resale

Table 1

Reference	Standard Dimensions (mm)	Tolerance (mm)	Reference	Standard Dimensions (mm)	Tolerance (mm)
K_1 (note 1)	21.8	-0.02	N_1(Note 1)	0.5	—
K_2 (Note 2)	21.05	-0.02	N_2 (Note 2)	24.5	—
L_1 (Note 1)	16.2	-0.02	V	20.7	-0.02
L_2 (Note 2)	15.45	-0.02	c	0.6	+0.1
M	25.3	-0.02	d	0.8	+0.1
M_1 (Note 1)	8.0	+0.02	δ	45°	+1° -1°

Table 2

Designation	See Figure	Reference	Standard Dimensions (mm)	Tolerance (mm)
G32d-1 G32q-1 GX32d-1 GX32q-1	2	X_2	2.0	-0.02
G32d-2 G32q-2 GX32d-2 GX32q-2	3	X_3 X_4	9.5 5.5	-0.02 +0.02 -0.01
G32d-3 G32q-3 GX32d-3 GX32q-3	4	X_3 X_4	9.5 5.5	-0.02 +0.02
G32d-4 G32q-4 GX32d-4 GX32q-4	3	X_3 X_4	17.0 13.0	-0.02 +0.02
G32d-5 G32q-5 GX32d-5 GX32q-5	4	X_3 X_4	17.0 13.0	-0.02 +0.02

NOTES

1 Dimensions K_1 and L_1 are measured at distance N_1 from the reference plane.

2 Dimensions K_2 and L_2 are measured at distance N_2 from the reference plane.

Copyright National Electrical Manufacturers Association
Provided by IHS under license with NEMA
No reproduction or networking permitted without license from IHS
Not for Resale

Purpose

To check that insertion of bases with nonsimilar designations (different figure after the hyphen) is prevented.

For details of G32d, G32q, GX32d and GX32q lampholders, see ANSI C81.62 standards sheet 2-506.

Testing

Attempt to insert each of the gauges into the lampholder.

Copyright National Electrical Manufacturers Association
Provided by IHS under license with NEMA
No reproduction or networking permitted without license from IHS
Not for Resale

"Go" Gauges "G" for Checking Key Slots in G32d, G32q, GX32d and GX32q Lampholders

Three gauges are required:

— one for checking all variations of G32d-1, G32q-1, GX32d-1 and GX32q-1 lampholders

— one for checking all variation of G32d-2, 4; G32q-2, 4; GX32d-2, 4 and GX32q-2, 4 lampholders

— one for checking all variations of G32d-3, 5; G32q-3, 5; GX32d-3, 5 and GX32q-3, 5; GX32d-3, 5 and GX32q-3, 5 lampholders.

The drawings are intended only to illustrate the essential dimensions of the gauges.

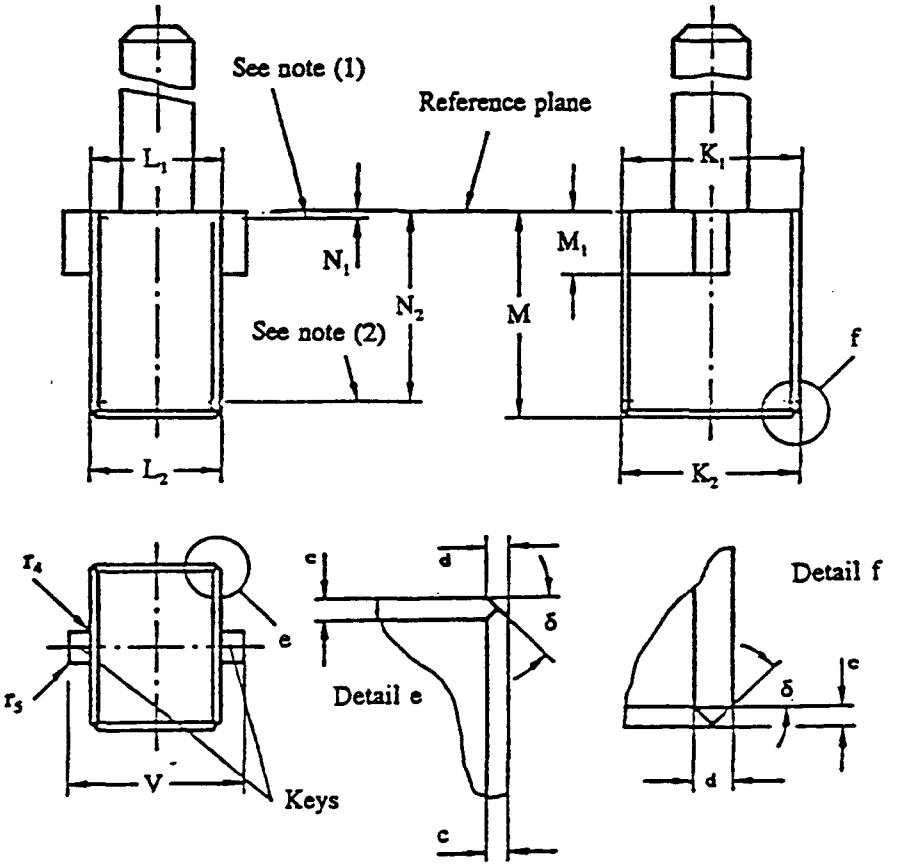

Figure 1

NOTE — Only the "Go" gauge for checking G32d-1, G32q-1, GX32d-1, and GX321-1 lampholders is shown.

Specific gauge designs required

Key configuration for checking G32d-.., G32q.., GX32d.., and GX32q.. lampholders.

Copyright National Electrical Manufacturers Association
Provided by IHS under license with NEMA
No reproduction or networking permitted without license from IHS
Not for Resale

Table 1

Reference	Standard Dimensions (mm)	Tolerance (mm)	Reference	Standard Dimensions (mm)	Standard Tolerance (mm)
K_1 (Note 1)	22.25	-0.02	V	22.1	+0.02
K_2 (Note 2)	21.5	-0.02	c	0.5	+0.1 -0.1
L_1 (Note 1)	16.65	-0.02	d	1	+0.1
L_2 (Note 2)	15.9	-0.02	r_4	0.2	+0.05 -0.05
M	26.5	+0.02	r_5	0.2	+0.05 -0.05
M_1 (Note 1)	8.0	+0.02	δ	45°	+1° -1°
N_1 (Note 1)	0.5	—			
N_2 (Note 2)	24.5	—			

NOTES

1 Dimensions K_1 and L_1 are measured at distance N_1 from the reference plane.
2 Dimensions K_2 and L_2 are measured at distance N_2 from the reference plane.

Copyright National Electrical Manufacturers Association
Provided by IHS under license with NEMA
No reproduction or networking permitted without license from IHS
Not for Resale

Table 2

Designation	See Figure	Reference	Standard Dimensions (mm)	Tolerance (mm)
G32d-1 G32q-1 GX32d-1 GX32q-1	2	X2	4.45	-0.02
G32d-2 G32q-2 GX32d-2 GX32q-2	3	X3 X4	11.5 3.05	-0.02 +0.02
G32d-3 G32q-3 GX32d-3 GX32q-3	4	X3 X4	11.95 3.05	-0.02 +0.02
G32d-4 G32q-4 GX32d-4 GX32q-4	3	X3 X4	19.45 10.55	-0.02 +0.02
G32d-5 G32q-5 GX32d-5 GX32q-5	4	X3 X4	19.45 10.55	-0.02 +0.02

Purpose

To check the acceptance of the lampholder keys.

For details of G32d, G32q, GX32d and GX32q lampholders, see ANSI C82.62 standard sheet 2-506.

Testing

Insert the gauge of the same designation as the lampholder under test into the lampholder until the reference plane of the gauge is in contact with the reference plane of the lampholder.

Copyright National Electrical Manufacturers Association
Provided by IHS under license with NEMA
No reproduction or networking permitted without license from IHS
Not for Resale

Gauges "A2" for Checking Maximum Insertion Force and Maximum Withdrawal Force in GX32d and GX32q Lampholders

C81.63b-1994
Std. Sheet 3-508-2

Two gauges are required for checking all keyway and pin arrangements; one for all G32d variations and another for all G32q variations.

The drawings are intended only to illustrate the essential dimensions of the gauges.

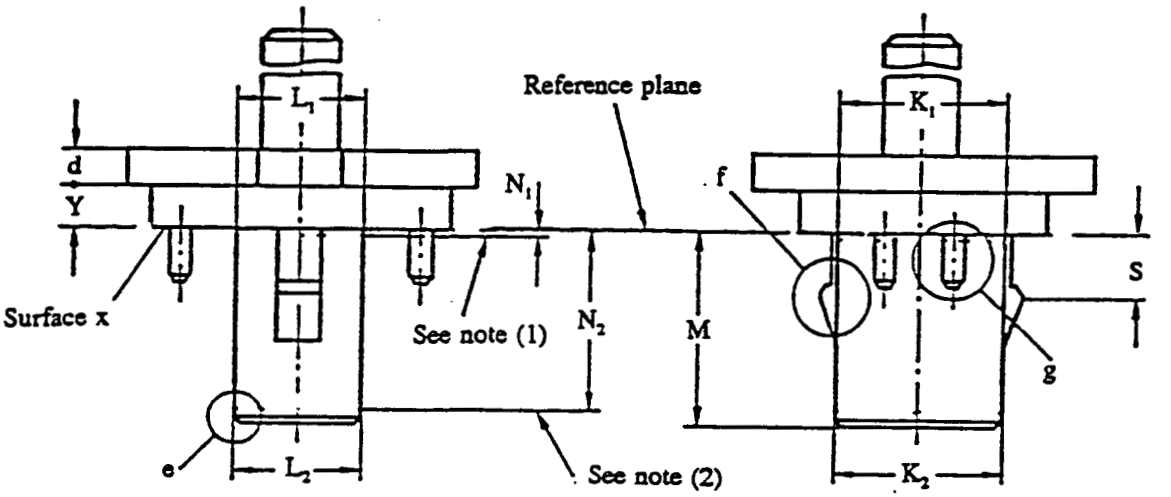

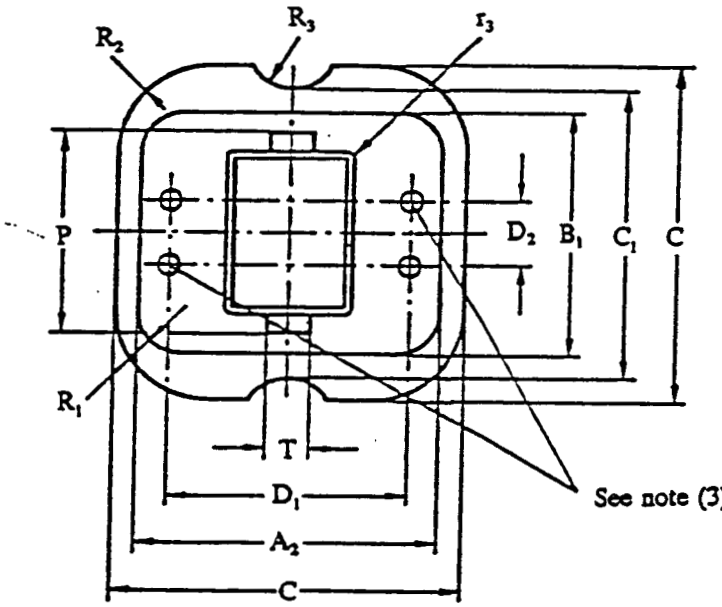

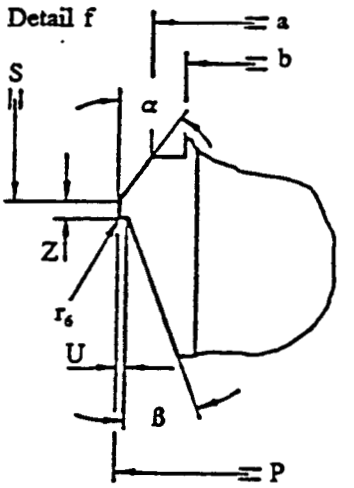

Surface finish 0.4 μm for the parts below the reference line

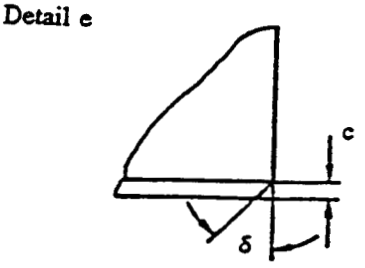

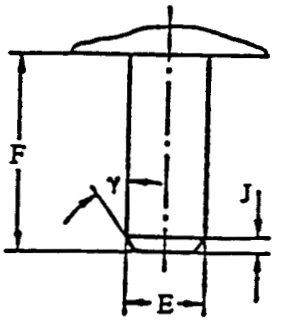

Copyright National Electrical Manufacturers Association
Provided by IHS under license with NEMA
No reproduction or networking permitted without license from IHS
Not for Resale

Reference	Standard Dimensions (mm)	Tolerance (mm)	Reference	Standard Dimensions (mm)	Tolerance (mm)
A_2	39.3	-0.02	P	26.7	+0.02
B_1	32.3	-0.02	R_1	5.9	-0.05
C	45.3	-0.05	R_2	11.9	-0.05
C_1	38.8	-0.05	R_3	5.9	-0.05
D_1	31.14	+0.005 -0.005	S	8.85	-0.02
D_2	8.14	+0.005 -0.005	T	5.5	+0.02
E	2.67	+0.01	U	0.2	+0.02 -0.02
F	6.8	+0.02	Y	5.7	-0.02
F_1	5.5	+0.05 -0.05	Z	0.5	+0.05
J	0.4	+0.05 -0.05	a	24.7	+0.01 -0.01
K_1 (Note 1)	21.95	+0.02	b	22.7	+0.01 -0.01
K_2 (Note 2)	21.2	+0.02	c	0.5	+0.1 -0.1
L_1 (Note 1)	16.35	+0.02	d	5	+0.1 -0.1
L_2 (Note 2)	15.6	+0.02	α	35°	+1° -1°
M	26.5	+0.02	β	25°	+1° -1°
N_1 (Note 1)	0.5	—	γ	35°	+1° -1°
N_2 (Note 2)	24.5	—	δ	45°	+1° -1°

NOTES

1 Dimensions K_1 and L_1 are measured at distance N_1 from the reference plane.
2 Dimensions K_2 and L_2 are measured at distance N_2 from the reference plane.
3 The drawing shows the gauge for checking G32q lampholders. For checking G32d lampholders, these two pins should be removed.

Copyright National Electrical Manufacturers Association
Provided by IHS under license with NEMA
No reproduction or networking permitted without license from IHS
Not for Resale

Purpose

To check the maximum insertion and withdrawal forces of a GX32d or GX32q base having maximum pin diameter and maximum pin length at maximum pin spacing and maximum dimension P.

For details of GX32d and GX32q lampholders, see ANSI C81.62 standard sheet 2-506.

NOTE — Gauge A2 is not used for checking G32d or G32q lampholders; see Gauge A1.

Testing

Insert the gauge into the lampholder until surface x of the gauge is in contact with surface x of the lampholder. Measure the insertion force. Withdraw the gauge while measuring the force.

Copyright National Electrical Manufacturers Association
Provided by IHS under license with NEMA
No reproduction or networking permitted without license from IHS
Not for Resale

"Go" Gauge for G38 Mogul Bipost-Based Lamps

The drawing is intended only to illustrate the essential dimensions of the gauge.

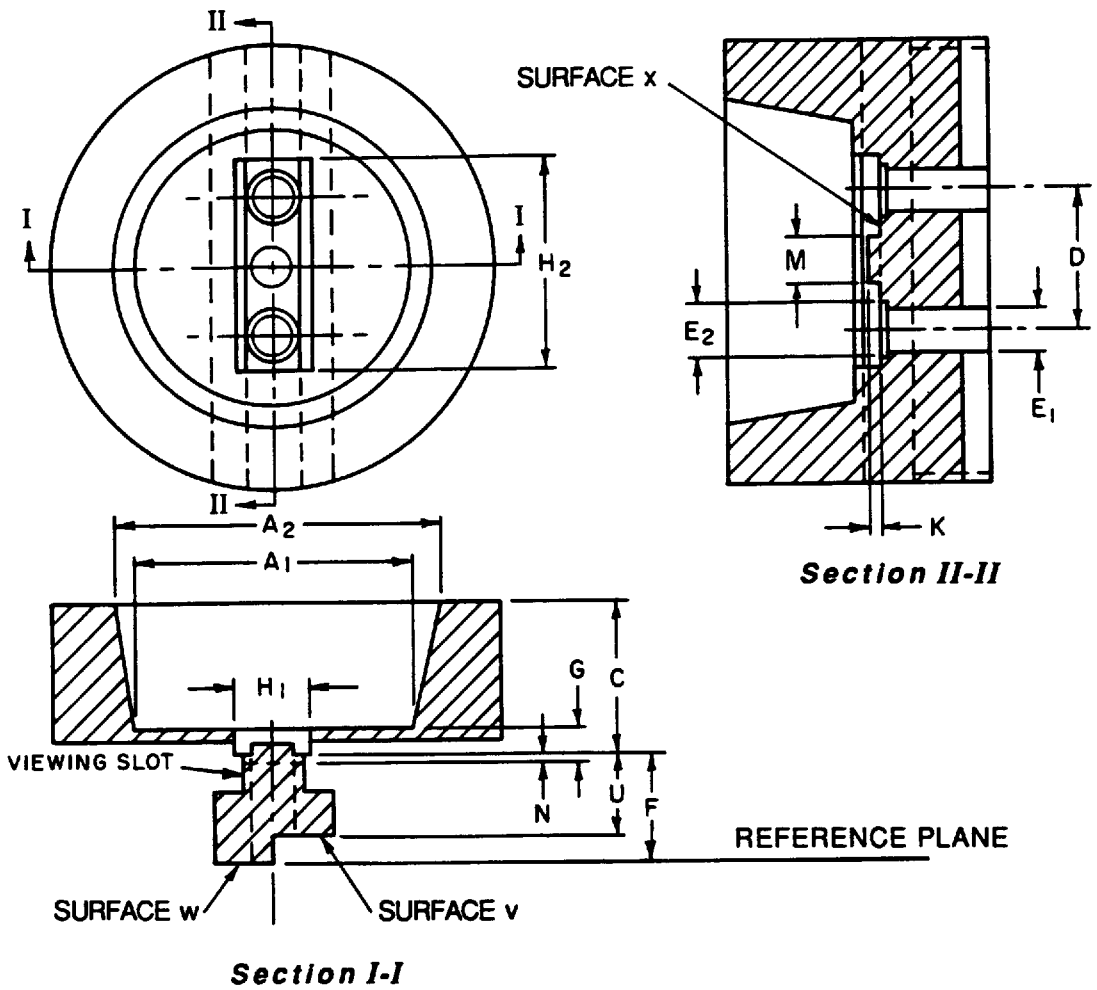

Section II-II

Section I-I

Copyright National Electrical Manufacturers Association
Provided by IHS under license with NEMA
No reproduction or networking permitted without license from IHS
Not for Resale

Reference	Dimension in	Tolerance in	Nearest metric equivalent mm
A_1	3.012	+0.002	76.50
A_2	3.504	+0.002	89.00
C	1.614	−0.002	41.00
D	1.500	±0.0005	38.10
E_1	0.466	+0.001	11.83
E_2	0.560	+0.001	14.23
F	1.156	+0.002	29.36
G	0.256	−0.002	6.50
H_1	0.795	+0.002	20.20
H_2	2.287	+0.002	58.10
K (Note)	0.138	−0.002	3.50
M (Note)	0.500	+0.005	12.70
N	0.047	−0.001	1.20
U	0.873	−0.001	22.17

NOTE – These dimensions apply to bases having an exhaust tip.

Purpose
To check the G38 mogul bipost base with respect to the maximum contour of the base above the reference plane, the combined displacement and diameter of the posts, the maximum post length, and the minimum contact length.

For details of G38 bases (surface x), see ANSI C81.61, Standard Sheet 1-519.

Testing
Insert the lamp base into the gauge until fully seated. Check the lengths of the posts between surfaces v and w.

Copyright National Electrical Manufacturers Association
Provided by IHS under license with NEMA
No reproduction or networking permitted without license from IHS
Not for Resale

"Go" and "Not-Go" Gauge for Posts of G38 Mogul Bipost-Based Lamps

The drawing is intended only to illustrate the essential dimensions of the gauge.

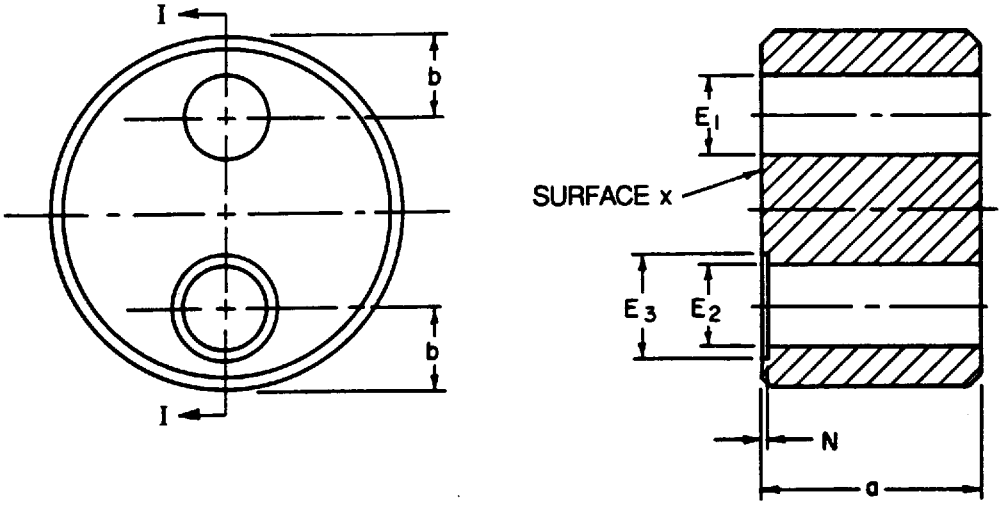

Section I-I

Reference	Dimension in	Tolerance in	Nearest metric equivalent mm
E_1	0.432	−0.0005	10.97
E_2	0.442	+0.0005	11.23
E_3	0.536	±0.0005	13.63
N	0.047	−0.001	1.20
a	1.18	±0.040	30.00
b	0.472 max	–	12.00 max

Purpose
To check the diameters of the individual posts of a G38 base on a finished lamp.

For details of G38 bases, see ANSI C81.61, Standard Sheet 1-519.

Testing
Insert each lamp base post into hole E_2 and check for contact of the base with surface x. Attempt to insert each post into hole E_1. Check for contact of the base with surface x.

Copyright National Electrical Manufacturers Association
Provided by IHS under license with NEMA
No reproduction or networking permitted without license from IHS
Not for Resale

"Go" Gauge for G38 Mogul Bipost Lampholders

The drawing is intended only to illustrate the essential dimensions of the gauge.

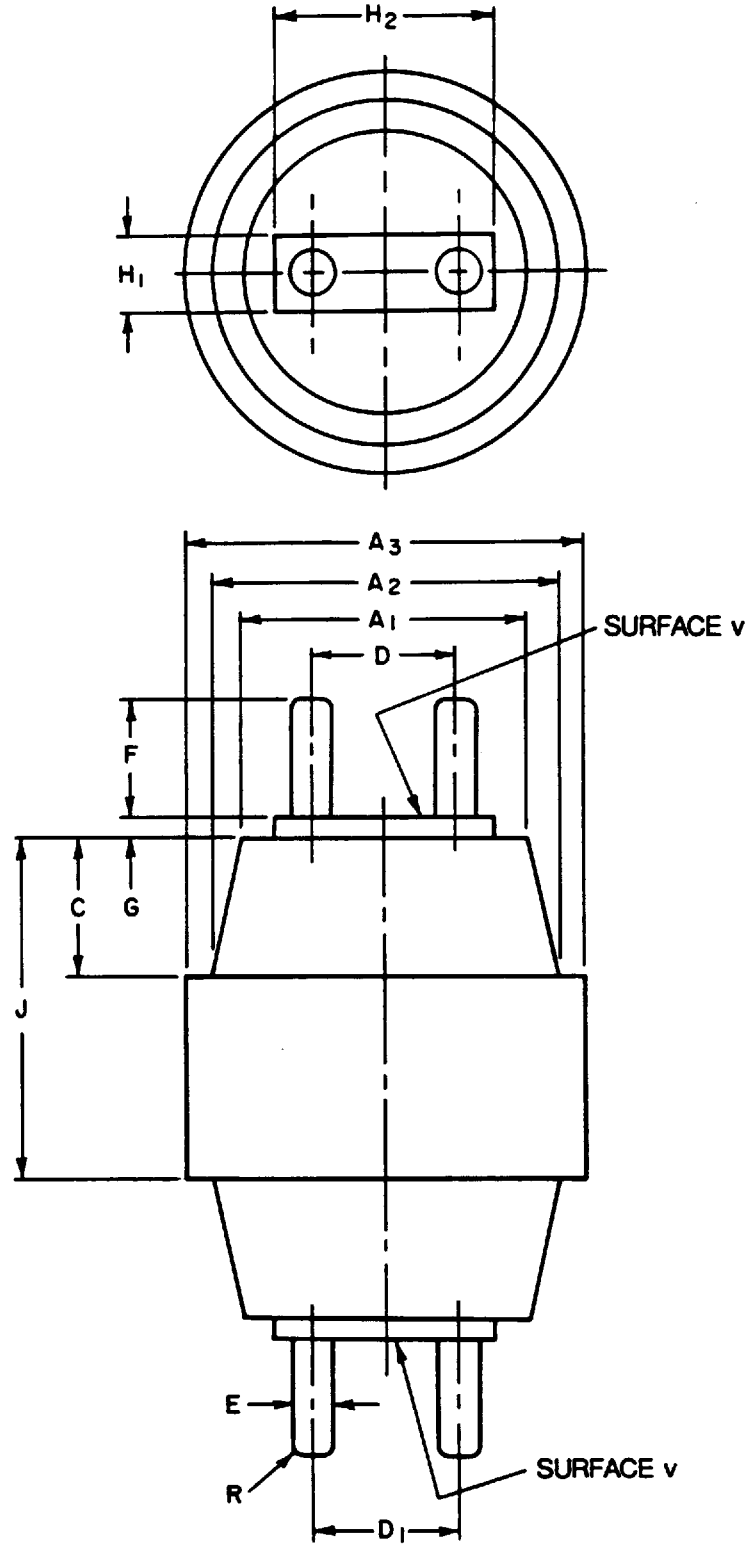

Copyright National Electrical Manufacturers Association
Provided by IHS under license with NEMA
No reproduction or networking permitted without license from IHS
Not for Resale

ANSI C81.63-1991
Std Sheet 3-523-1

Reference	Dimension *in*	Tolerance *in*	Nearest metric equivalent *mm*
A_1	3.016	–0.002	76.6
A_2	3.508	–0.002	89.1
A_3	4.193	–0.002	106.5
C	1.610	±0.002	40.9
D	1.525	±0.0005	38.74
D_1	1.475	±0.0005	37.47
E	0.443	–0.0005	11.25
F	1.160	–0.001	29.46
G	0.252	+0.001	6.4
H_1	0.799	–0.001	20.3
H_2	2.291	–0.001	58.2
J	3.740	±0.002	95.0
R	0.118	–0.005	3.0

Purpose
To check the G38 lampholder with respect to the fit of a maximum lamp with maximum and minimum post spacings.

For details of G38 lampholders, see ANSI C81.62, Standard Sheet 2-519.

Testing
Insert each end of the gauge into the lampholder. Check to see if surface v is in contact with the lampholder.

Copyright National Electrical Manufacturers Association
Provided by IHS under license with NEMA
No reproduction or networking permitted without license from IHS
Not for Resale

"GO" AND "NOT GO" GAUGE FOR PG12 BASED LAMPS

This drawing is intended only to illustrate the essential dimensions of the gauge.

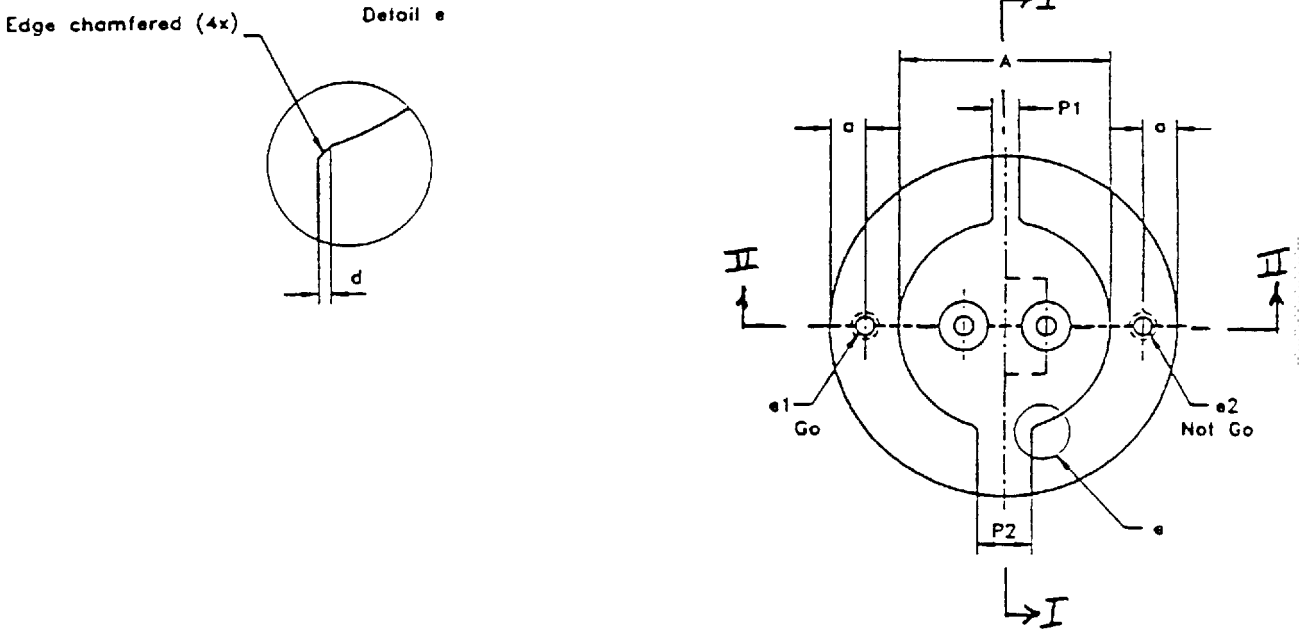

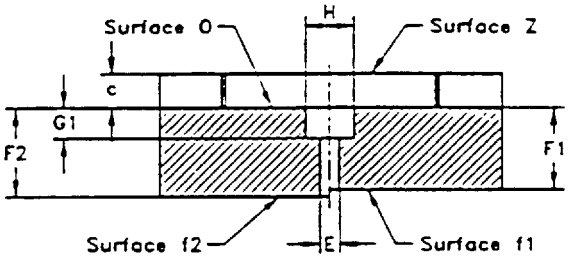

Section I-I

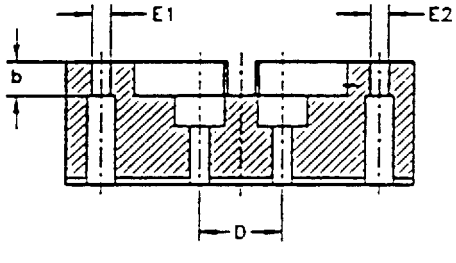

Section II-II

Copyright National Electrical Manufacturers Association
Provided by IHS under license with NEMA
No reproduction or networking permitted without license from IHS
Not for Resale

Reference	Dimensions (millimeters)	Tolerance (millimeters)	Reference	Dimensions (millimeters)	Tolerance (millimeters)
A	30.6	+0.01	H	7.1	+0.01
D	12.0	+0.005 -0.005	P_1	4.0	+0.02
E	2.79	+0.01	P_2	7.9	+0.02
E_1	2.67	+0.01	a	5	+0.2 -0.2
E2	2.29	-0.01	b	5	+0.5 -0.5
F	12.5	+0.025	c	5	+0.5 -0.5
F_1	11.4	-0.025	d	0.6	+0.1
G_1	4.5	+0.025			

PURPOSE

To check maximum base outline with respect to dimension A_{max}, the combined displacement and diameter of the pins and the bosses for the pins, the diametrical position and width of the lugs with references P_1 and P_2 related to dimension A and the dimensions E_{min}, E_{max}, F_{min}, and F_{max} of the individual pins.

For details fo PG12 bases, see ANSI C81.61, Standard Sheet 1-545.

TESTING

Insert the base into the gauge at surface "z" with the reference lug in the small notch of the gauge. Check for contact at surface "o." Check the relationship of the pin ends with surfaces "f_1" and "f_2." Insert each pin, in turn, into hole "E_1." Check for contact at surface "z." Attempt to insert each pin, in turn, into hole "E_2."

Copyright National Electrical Manufacturers Association
Provided by IHS under license with NEMA
No reproduction or networking permitted without license from IHS
Not for Resale

PLUG GAUGE "A" FOR PG12 LAMPHOLDER

This drawing is intended only to illustrate the essential dimensions of the gauge.

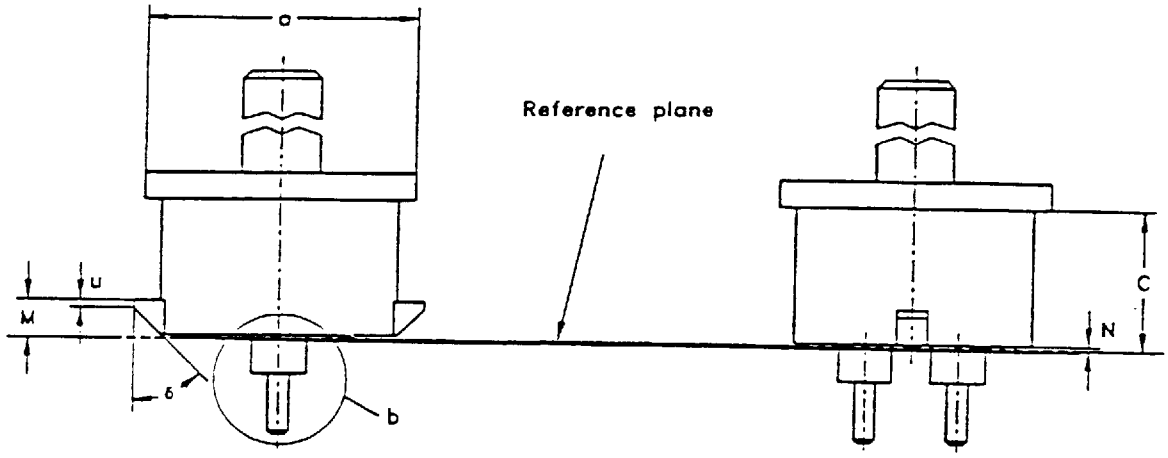

Detail b

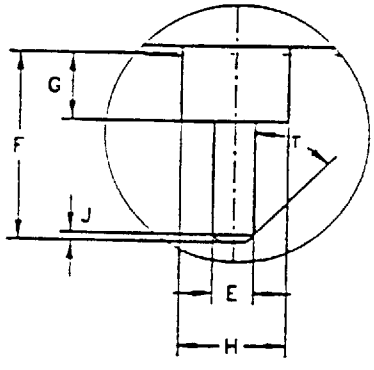

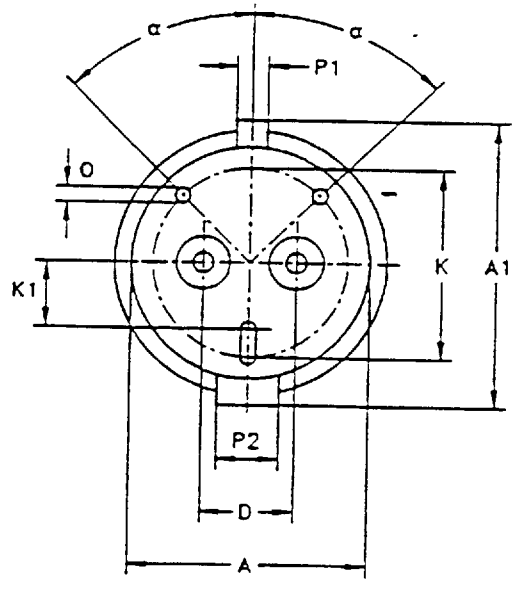

Surface finish: 0.4μm for the parts below the reference plane

Copyright National Electrical Manufacturers Association
Provided by IHS under license with NEMA
No reproduction or networking permitted without license from IHS
Not for Resale

Reference	Dimensions (millimeters)	Tolerance (millimeters)	Reference	Dimensions (millimeters>)	Tolerance (<millimeters)
A	30.61	+0.02	M	5.02	+0.02
A_1	37.62	+0.02	N	0.5	-0.05 +0.1
C	18.0	+0.05	O	2.0	-0.1
D	12.135	+0.01	P_1	4.02	+0.02
E	2.67	+0.01	P_2	7.92	+0.02 +0.5
F	12.53	+0.02	a	35.0	-0.5
G	4.53	+0.02	u	1.0	+0.05 +1°
H	6.98	+0.02	α	45°	-1° +30'
J	0.4	-0.05 +0.1	γ	30°	-30'
K	25.0	-0.1 +0.1	δ	45°	-1°
K_1	8.8	-0.1			

PURPOSE

To check dimensions A_{min}, A_{1min}, P_{1min}, P_{2min}, H_{min}, and G_{min} and the maximum insertion and withdrawal forces related to a base having maximum pin dimensions at maximum spacing, and maximum A_1 dimension.

For details of PG12 lampholders, see ANSI C81.62 standard sheet 2-545.

TESTING

While measuring the force, insert the gauge into the lampholder until the supporting bosses of the gauge contact the face of the lampholder.

Check the relationship between the rim of the lampholder and surface "c" of the gauge. While measuring the force, withdraw the gauge from the lampholder.

Copyright National Electrical Manufacturers Association
Provided by IHS under license with NEMA
No reproduction or networking permitted without license from IHS
Not for Resale

PLUG GAUGE "B" FOR PG12 LAMPHOLDERS

This drawing is intended only to illustrate the essential dimensions of the gauge.

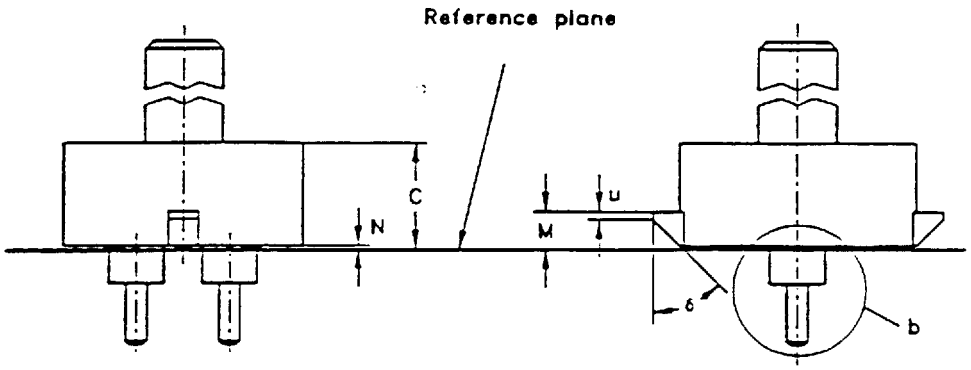

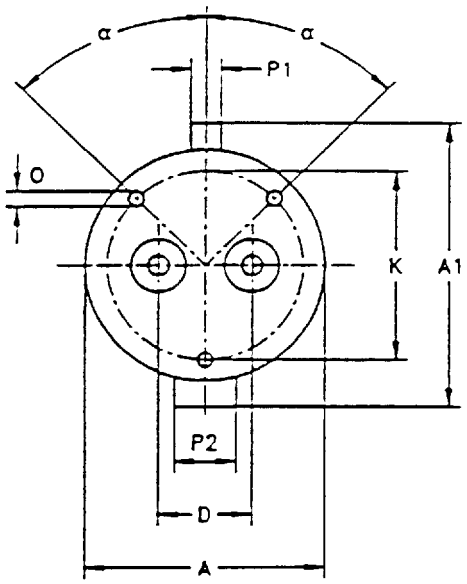

Detail b

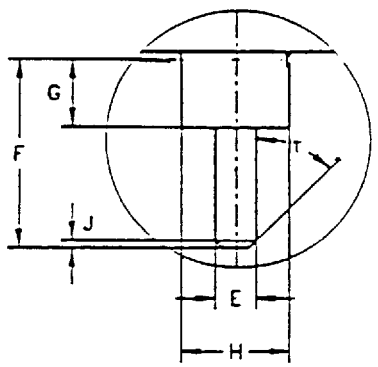

Surface finish: 0.4μm for the parts below the reference plane

Copyright National Electrical Manufacturers Association
Provided by IHS under license with NEMA
No reproduction or networking permitted without license from IHS

Not for Resale

Reference	Dimensions (millimeters)	Tolerance (millimeters)	Reference	Dimensions (millimeters)	Tolerance (millimeters)
A	30.61	+0.02	M	5.02	+0.02
A_1	37.62	+0.02	N	0.5	-0.05
C	14.0	+0.2 -0.2	O	+0.1 2.0	-0.1
D	11.865	-0.01	P_1	4.02	+0.02
E	2.67	+0.01	P_2	7.92	+0.02
F	12.53	+0.02	u	1.0	+0.05
G	4.53	+0.02	α	+1° 45°	-1°
H	6.98	+0.02	γ	30°	+30' -30'
J	0.4	-0.05	δ	45°	-1°
K	25.0	+0.1 -0.1			

PURPOSE

To check the maximum insertion force related to a base having maximum pin-dimensions at minimum pin spacing, maximum A_1 dimension.

For details of PG12 lampholders, see ANSI C81.62, Standard Sheet 2-545.

TESTING

While measuring the force, insert the gauge into the lampholder until the supporting bosses of the gauge contact the face of the lampholder.

Copyright National Electrical Manufacturers Association
Provided by IHS under license with NEMA
No reproduction or networking permitted without license from IHS
Not for Resale

PLUG GAUGE "C" FOR PG12 LAMPHOLDERS

This drawing is intended only to illustrate the essential dimensions of the gauge.

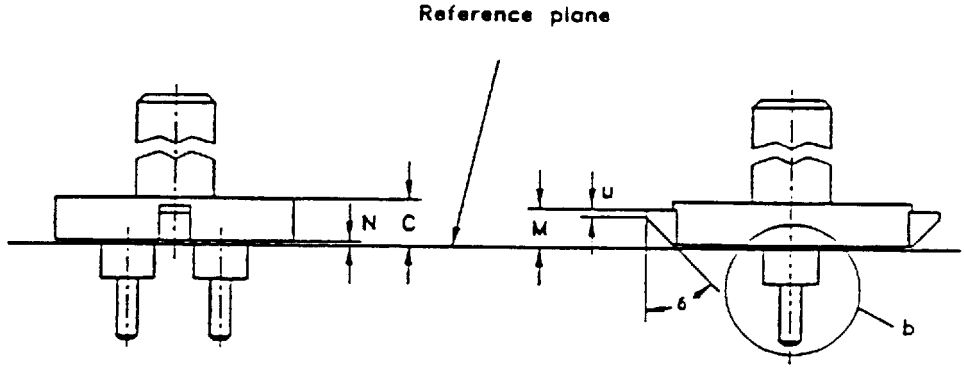

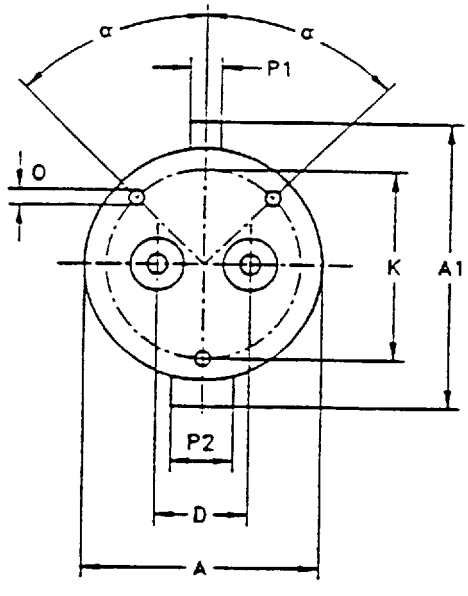

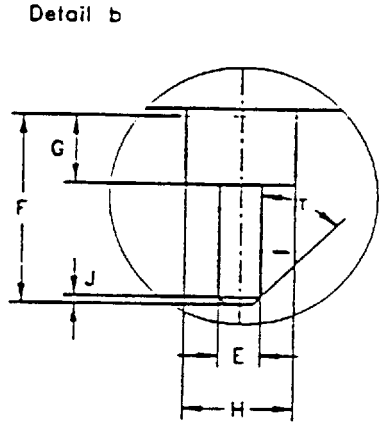

Surface finish: 0.4μm for the parts below the reference plane

Copyright National Electrical Manufacturers Association
Provided by IHS under license with NEMA
No reproduction or networking permitted without license from IHS

Not for Resale

Reference	Dimensions (millimeters)	Tolerance (millimeters)	Reference	Dimensions (millimeters)	Tolerance (millimeters)
A	29.4	-0.02	M	0.5	-0.05 +0.1
A_1	36.4	-0.02 +0.005	O	2.0	-0.1
D	12.0	-0.005	P_1	3.7	-0.05
E	2.29	-0.01	P_2	7.0	-0.05 +0.5
F	11.4	-0.01	C	6	-0.5
G	3.0	+0.05	u	0.5	-0.05 +30'
H	6.2	-0.05	α	45°	-30' +30'
J	0.4	-0.1 +0.1	γ	35°	-30' +30'
K	25.0	-0.1	δ	40°	-30'
M	4.58	-0.02			

PURPOSE

To check the minimum retention force related to a base having minimum pin dimensions at nominal pin spacing and minimum contour dimensions.

For details of PG12 lampholders, see ANSI C81.62, Standard Sheet 2-545.

TESTING

Insert the gauge into the lampholder until the supporting bosses of the gauge contact the face of the lampholder.

Withdraw the gauge while measuring the force.

Copyright National Electrical Manufacturers Association
Provided by IHS under license with NEMA
No reproduction or networking permitted without license from IHS
Not for Resale

"Go" and "Not-Go" Gauge for Diameter of Collar on P30 Prefocus Bases on Finished Lamps

The drawing is intended only to illustrate the essential dimensions of the gauge.

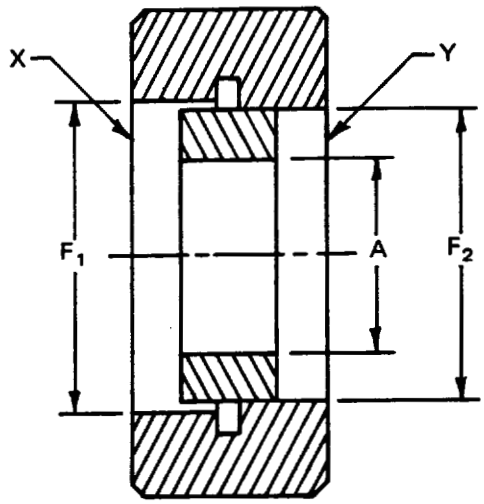

Reference	Dimension in	Tolerance in	Nearest metric equivalent mm
A	0.6300	+0.0005	16.0
F_1	1.186	+0.001	30.12
F_2	1.180	–0.001	29.98

Purpose
To check minimum and maximum collar diameter.

For details of P30 bases, see ANSI C81.61, Standard Sheet 1-709.

Testing
Insert the base of the lamp at openings X and Y in turn and check for "Go" and "Not-Go" at openings F_1 and F_2, respectively.

Copyright National Electrical Manufacturers Association
Provided by IHS under license with NEMA
No reproduction or networking permitted without license from IHS
Not for Resale

"Go" Gauge for P40 Mogul Prefocus-Based Lamps and for Unmounted Bases

The drawing is intended only to illustrate the essential dimensions of the gauge.

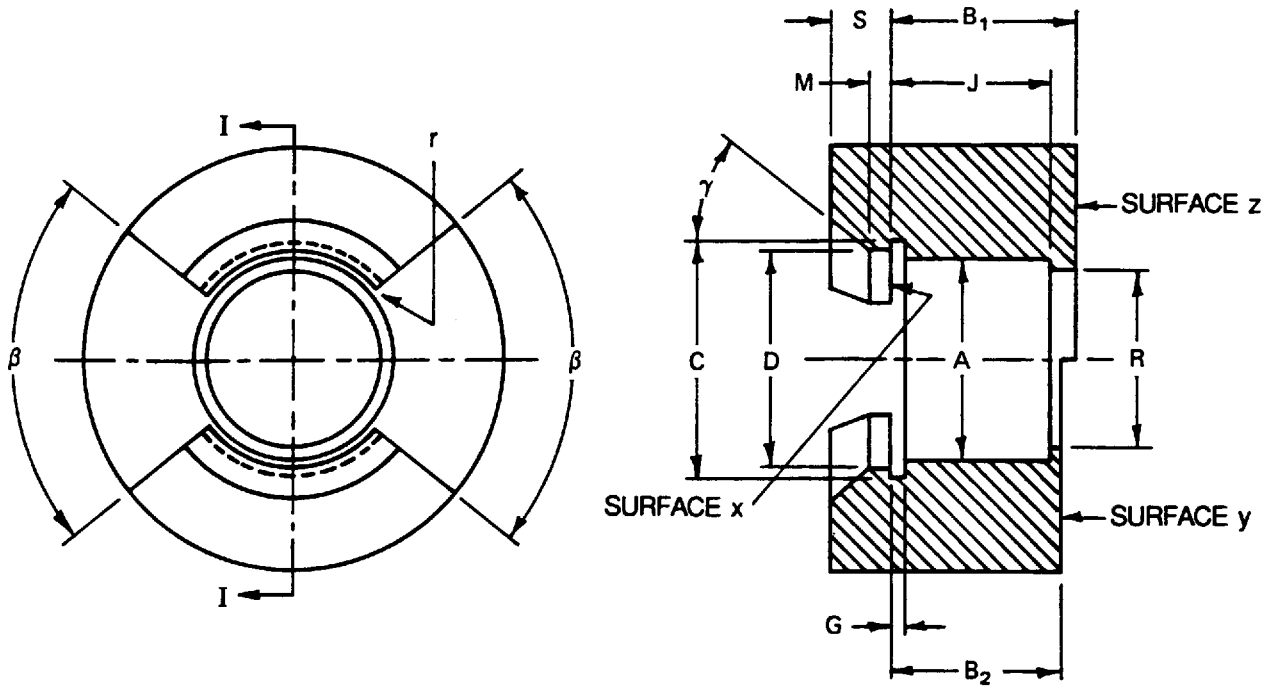

Section I-I

Reference	Dimension in	Tolerance in	Nearest metric equivalent mm
A	1.559	+0.001	39.60
B_1	1.701	+0.001	43.21
B_2	1.610	–0.001	40.90
C	2.012	+0.001	51.10
D	1.635	+0.001	41.53
G	0.076	+0.001	1.93
J	1.398	+0.005	35.51
M	0.118	–0.002	3.00
R	1.350	+0.005	34.29
S	0.315	±0.005	8.00
r	0.012	±0.002	0.30
β (degrees)	71°	+15'	71°
γ (degrees)	45°	±30'	45°

Copyright National Electrical Manufacturers Association
Provided by IHS under license with NEMA
No reproduction or networking permitted without license from IHS
Not for Resale

ANSI C81.63-1991
Std Sheet 3-715-1

Purpose

To check dimensions A max, B_1 max, B_1 min, C max, D max, G max, J max, and angles β and γ of P40 bases on finished lamps and on unmounted bases.

For details of P40 bases, see ANSI C81.61, Standard Sheet 1-715.

Testing

Push the base of the lamp through recesses β. Turn the gauge approximately 90 degrees with the flanges pressed against surface x. Check center contact of the base in relation to surfaces y and z.

Copyright National Electrical Manufacturers Association
Provided by IHS under license with NEMA
No reproduction or networking permitted without license from IHS
Not for Resale

"Go" Gauge for P40 Mogul Prefocus Lampholders

The drawing is intended only to illustrate the essential dimensions of the gauge.

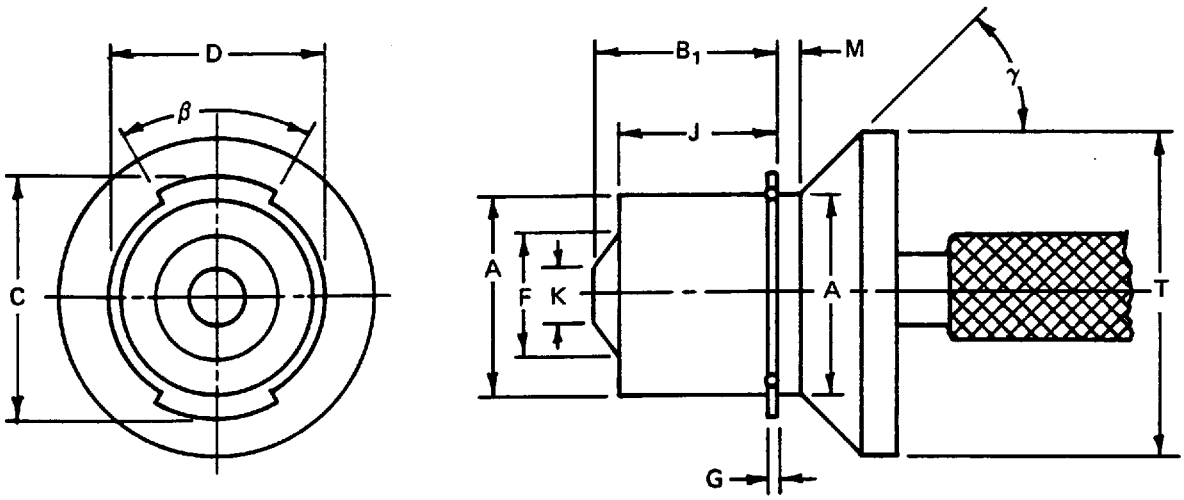

Reference	Dimension in	Tolerance in	Nearest metric equivalent mm
A	1.562	±0.0005	39.68
B_1	1.750	–0.001	44.45
C	2.056	–0.001	52.22
D	1.637	–0.001	41.58
F	1.130	+0.001	28.70
G	0.078	–0.001	1.98
J	1.400	+0.001	35.56
K	0.906	+0.001	23.02
M	0.115	+0.001	2.92
T	2.258	–0.001	57.35
β (degrees)	72°	–15'	72°
γ (degrees)	45°	±30'	45°

Purpose
To check lampholders with regard to the fit of a lamp with a maximum base.

For details of P40 lampholders, see ANSI C81.62, Standard Sheet 2-715.

Testing
Insert the gauge into the lampholder and turn it until it reaches the normal operating position of a lamp.

Copyright National Electrical Manufacturers Association
Provided by IHS under license with NEMA
No reproduction or networking permitted without license from IHS
Not for Resale

"Go" Gauge for R7s Recessed Single-Contact Lampholders at Minimum Spacing

The drawing is intended only to illustrate the essential dimensions of the gauge.

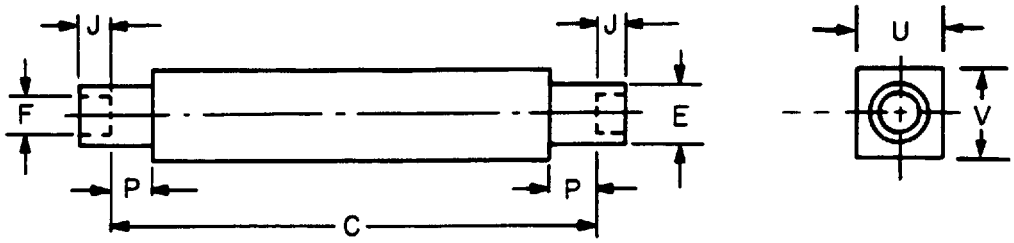

Reference	Dimensions in		Tolerance in	Nearest Metric Equivalent mm	
	Types 1 & 2 lampholders	Type 3 lampholders		Types 1 & 2 lampholders	Type 3 lampholders
C	(Note)	(Note)	−0.005	(Note)	(Note)
E	0.295	0.295	−0.0005	7.49	7.49
F	0.165	0.165	+0.0005	4.19	4.19
J	0.065	0.065	+0.0005	1.65	1.65
P	0.195	0.115	+0.001	4.95	2.92
U	0.370	0.295	−0.0005	9.40	7.49
V	0.880	0.840	−0.001	22.35	21.34

NOTE – Dimension C of the gauge shall be equal to the C max dimension of the corresponding lamp, plus 0.040 in (1.02 mm).

Purpose
To check the combined pair of lampholders with regard to entry of a maximum lamp.

For details of R7s lampholders, see ANSI C81.62, Standard Sheet 2-770.

Testing
Insert the gauge having the dimensions given in the above table into the combined pair of holders mounted at the minimum permissible spacing (as recommended by the holder manufacturer).

Copyright National Electrical Manufacturers Association
Provided by IHS under license with NEMA
No reproduction or networking permitted without license from IHS
Not for Resale

"Go" and "Not-Go" Gauge for R17d Recessed Double-Contact Bases on Finished Lamps

The drawing is intended only to illustrate the essential dimensions of the gauge.

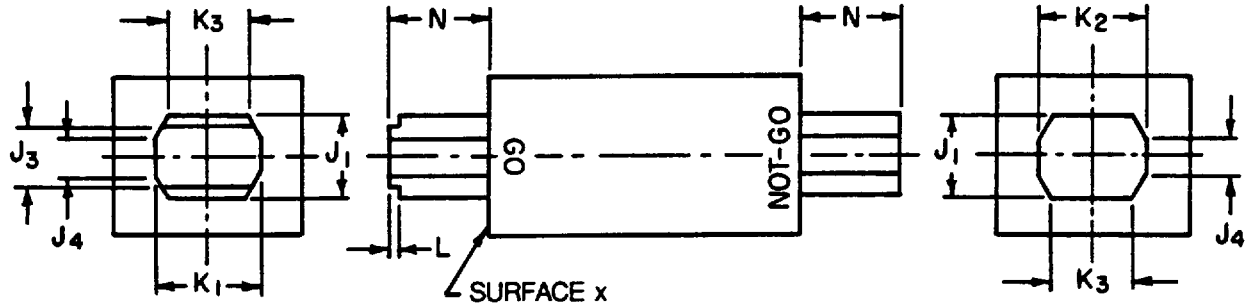

Reference	Dimension in	Tolerance in	Nearest metric equivalent mm
J_1	0.201	–0.0005	5.11
J_3	0.170	–0.001	4.32
J_4	0.130	–0.001	3.30
K_1	0.272	–0.0005	6.91
K_2	0.285	+0.0005	7.24
K_3	0.210	–0.001	5.33
L	0.015	+0.001	0.38
N	0.250	–0.001	6.35

Purpose
To check dimensions J min, K min, K max, and N min.

For details of R17d bases, see ANSI C81.61, Standard Sheet 1-777.

Testing
Insert both ends of the gauge into the recess of each base on a finished lamp. Check for "Go" and "Not-Go" without binding, to a point such that surface x rests on the outer edge of the boss.

Copyright National Electrical Manufacturers Association
Provided by IHS under license with NEMA
No reproduction or networking permitted without license from IHS
Not for Resale

"Go" Gauge for R17d Recessed Double-Contact Lampholders

The drawing is intended only to illustrate the essential dimensions of the gauge.

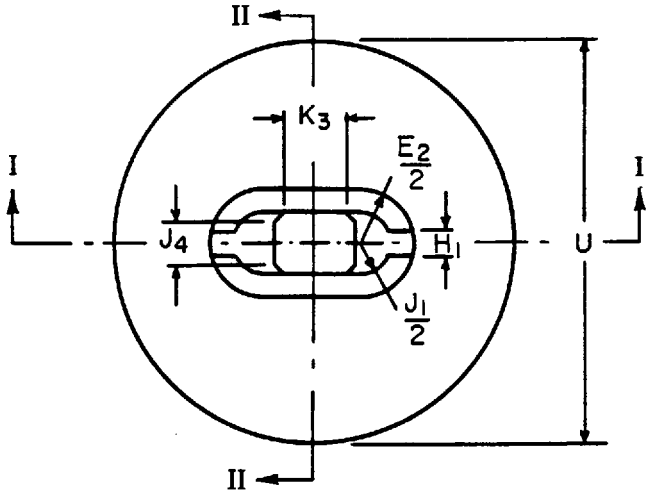

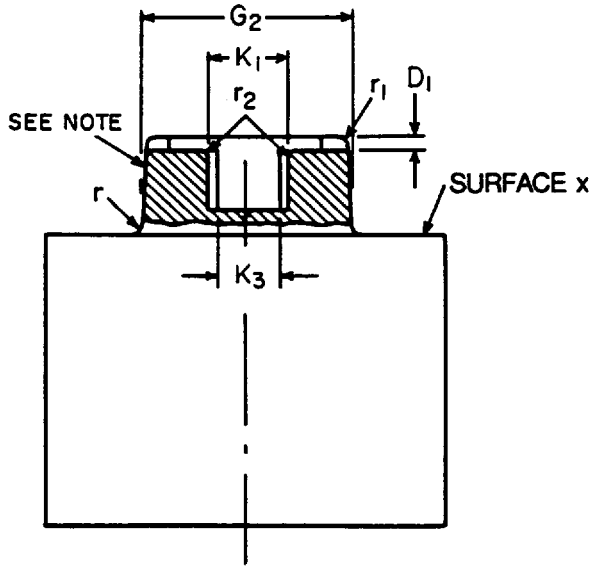

Section I-I

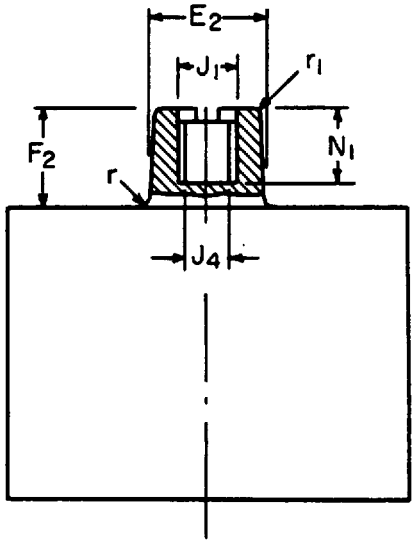

Section II-II

NOTE – The outside surfaces of the gauge shall have a taper of approximately 30 minutes.

Copyright National Electrical Manufacturers Association
Provided by IHS under license with NEMA
No reproduction or networking permitted without license from IHS
Not for Resale

ANSI C81.63-1991
Std Sheet 3-780-1

Reference	Dimension in	Tolerance in	Nearest metric equivalent mm
D_1	0.036	+0.001	0.91
E_2 (Note 1)	0.351	−0.0005	8.92
F_2	0.320	−0.0005	8.13
G_2 (Note 1)	0.659	−0.0005	16.74
H_1	0.088	−0.002	2.24
J_1	0.200	+0.0005	5.08
J_4	0.128	±0.001	3.25
K_1	0.271	+0.0005	6.88
K_3	0.208	+0.001	5.28
N_1	0.250	+0.002	6.35
U (Note 2)	1.45 (T-12)	±0.05	36.83 (T-12)
	2.05 (PG-17)	±0.05	52.07 (PG-17)
	2.05 (TH-17)	±0.05	52.07 (TH-17)
r	0.047	−0.005	1.19
r_1	0.031	+0.005	0.79
r_2	0.020	−0.005	0.51

NOTES

1 Dimension E_2 and G_2 are measured at a point 0.050 in (1.27 mm) from surface x.

2 This dimension is shown separately for T-12, PG-17, and TH-17 bulb lamps.

Purpose
To check that a lampholder can accept a base of maximum external and minimum internal dimensions.

For details of R17d lampholder, see ANSI C81.62, Standard Sheet 2-777.

Testing
Insert the gauge into a lampholder and check that surface x meets the lampholder base.

Copyright National Electrical Manufacturers Association
Provided by IHS under license with NEMA
No reproduction or networking permitted without license from IHS
Not for Resale

Contact-Making Gauge for R17d Recessed Double-Contact Lampholders

The drawing is intended only to illustrate the essential dimensions of the gauge.

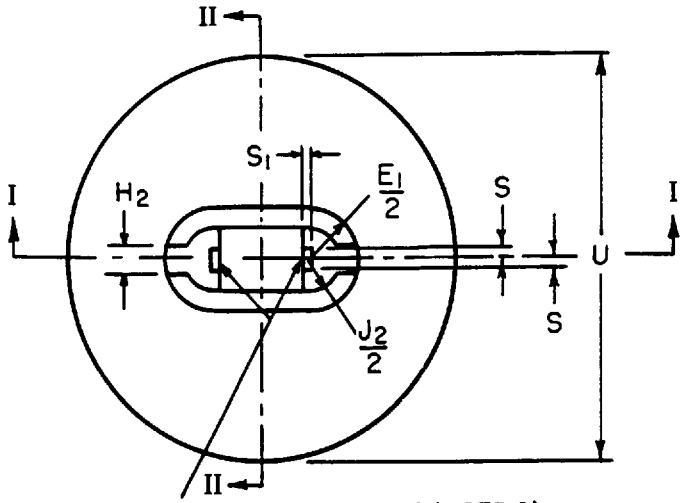

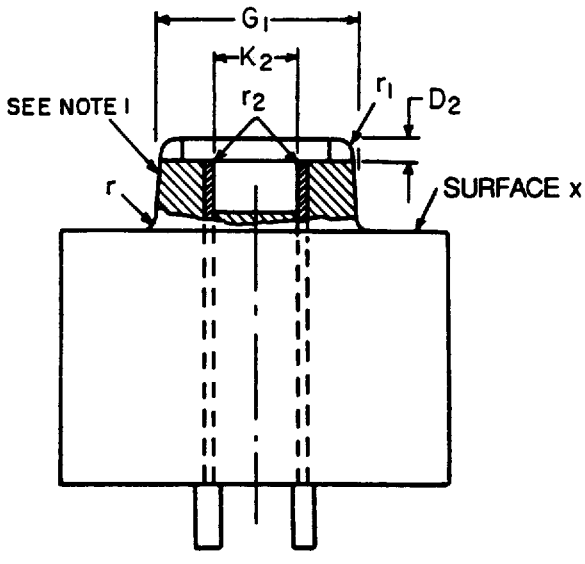

Section I-I

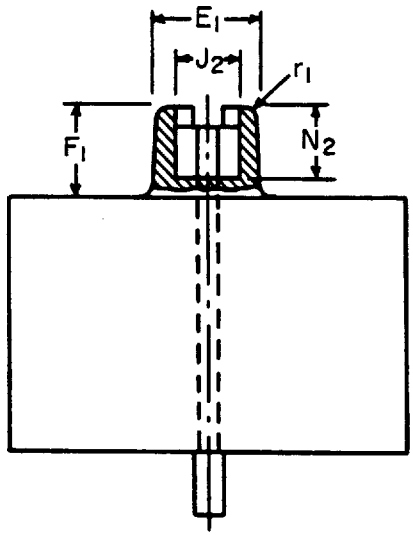

Section II-II

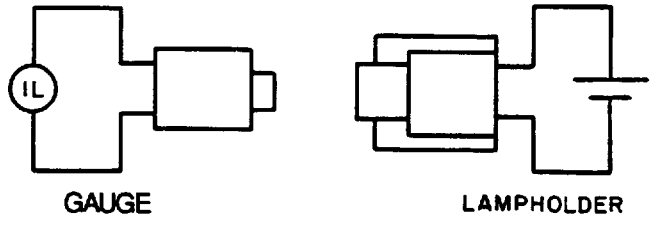

TEST CIRCUIT

Copyright National Electrical Manufacturers Association
Provided by IHS under license with NEMA
No reproduction or networking permitted without license from IHS
Not for Resale

Reference	Dimension in	Tolerance in	Nearest metric equivalent mm
D_2	0.075	−0.001	1.90
E_1 (Note 3)	0.334	+0.0005	8.48
F_1	0.307	+0.0005	7.80
G_1 (Note 3)	0.369	+0.0005	16.23
H_2	0.088	±0.001	2.24
J_2	0.211	−0.0005	5.36
K_2	0.286	−0.0005	7.26
N_2	0.250	−0.002	6.35
S	0.040	±0.0005	1.02
S_1	0.020	±0.001	0.51
U (Note 4)	1.45 (T-12)	±0.05	36.83 (T-12)
	2.05 (PG-17)	±0.05	52.07 (PG-17)
	2.05 (TH-17)	±0.05	52.07 (TH-17)
r	0.047	+0.005	1.19
r_1	0.031	−0.005	0.79
r_2	0.050	−0.005	1.27

NOTES

1 The outside surface of the gauge shall have a taper of approximately 30 minutes.

2 The electrical contacts are insulated from the metal body of the gauge.

3 Dimensions E_1 and G_1 are measured at a point 0.050 in (1.27 mm) from surface x.

4 This dimension is shown separately for T-12, PG-17, and TH-17 bulb lamps.

Purpose
To check that a lampholder can make and maintain electrical contact with a base having minimum external and maximum internal dimensions.

For details of R17d lampholder, see ANSI C81.62, Standard Sheet 2-777.

Testing
Insert the gauge into a lampholder and check for illumination of the lamp IL in the test circuit.

Copyright National Electrical Manufacturers Association
Provided by IHS under license with NEMA
No reproduction or networking permitted without license from IHS
Not for Resale

Double-Ended "Go" Gauge, Maximum Length Lamp and Minimum Lampholder Spacing, for R17d Recessed Double-Contact Lampholders

The drawing is intended only to illustrate the essential dimensions of the gauge.

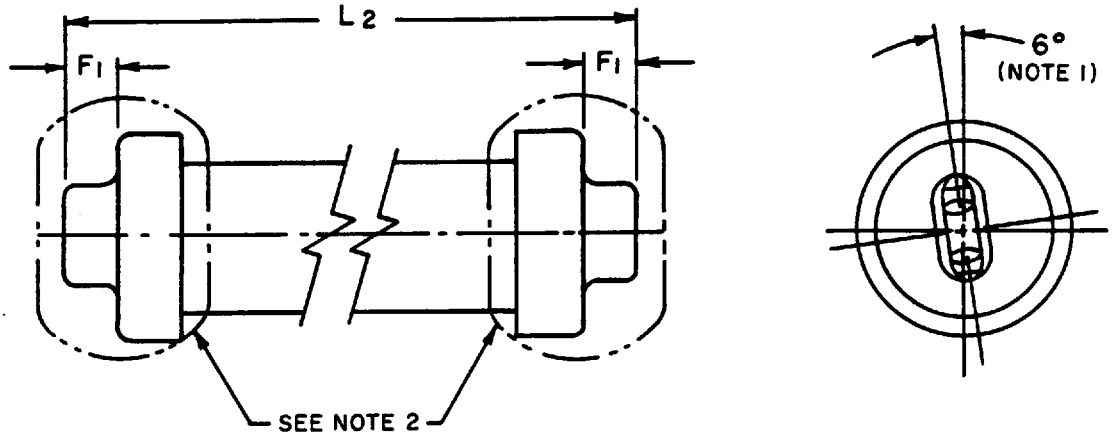

Reference	Dimension in	Tolerance in	Nearest metric equivalent mm
L_2 (Note 3)	15.910	±0.004	404.11
F_1	0.307	+0.0005	7.80

NOTES

1 The two ends of the gauge are so aligned that the plane containing the axis of the base at one end forms an angle of 6° ± 0.25° with the planes containing the axis of the base at the other end, as shown.

2 All other dimensions correspond with the "Go" gauge shown on Standard Sheet 3-780 in this standard.

3 For convenience in the use of the gauge, this length represents a lamp having a nominal length of 18 in (457.2 mm).

Purpose

To check a combined pair of lampholders to ascertain that at their minimum permissible spacing (as recommended by the manufacturer), they will accept a lamp of maximum length with maximum rotational misalignment between the planes of the lamp base at the two ends of the lamp.

For details of R17d lampholders, see ANSI C81.62, Standard Sheet 2-777.

Testing

Insert and remove the gauge from holders without difficulty or holder breakage.

Copyright National Electrical Manufacturers Association
Provided by IHS under license with NEMA
No reproduction or networking permitted without license from IHS
Not for Resale

Double-Ended "Go" Gauge, Minimum-Length Lamp and Maximum Lampholder Spacing, for R17d Recessed Double-Contact Lampholders

The drawing is intended only to illustrate the essential dimensions of the gauge.

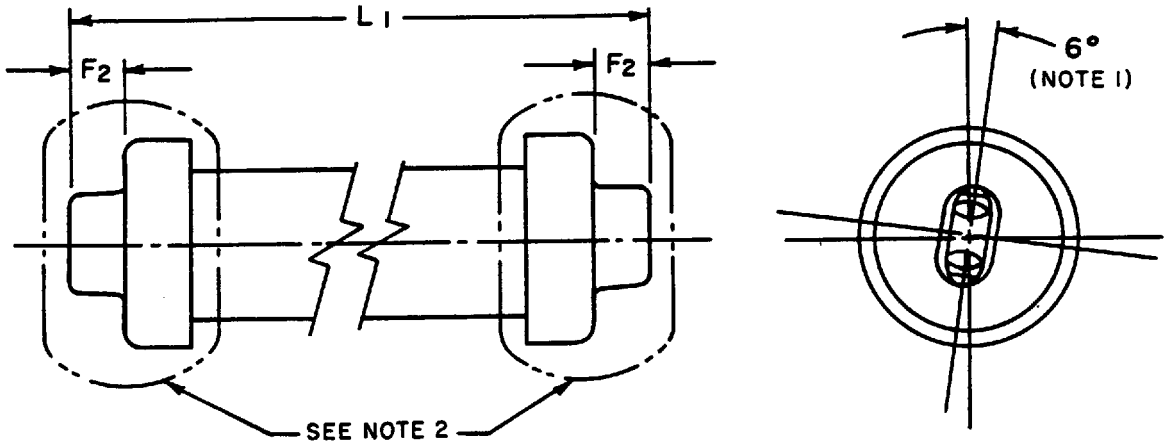

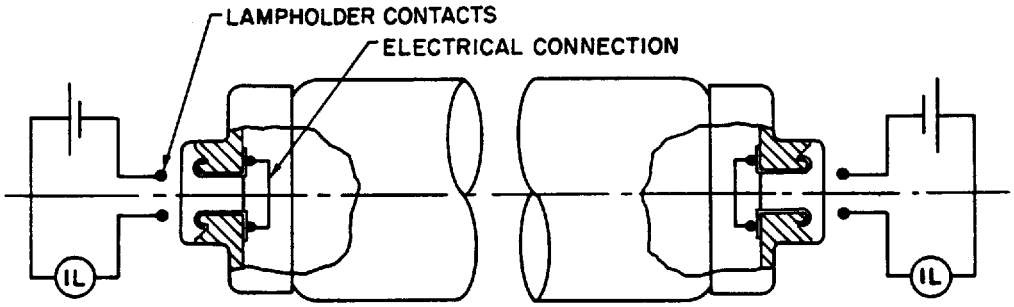

TEST CIRCUIT

Reference	Dimension in	Tolerance in	Nearest metric equivalent mm
L_1 (Note 3)	15.720	±0.0040	399.29
F_2	0.320	−0.0005	8.13

NOTES

1 The two ends of the gauge are so aligned that the plane containing the axis of the base at one end forms an angle of 6° ± 0.25° with the planes containing the axis of the base at the other end, as shown.

2 All other dimensions correspond with the contact-making gauge shown on Standard Sheet 3-784 in this standard.

3 For convenience in the use of the gauge, this length represents a lamp having a nominal length of 18 in (457.2 mm).

Copyright National Electrical Manufacturers Association
Provided by IHS under license with NEMA
No reproduction or networking permitted without license from IHS
Not for Resale

Purpose
To check a combined pair of R17d lampholders to ascertain that at their maximum permissible spacing (as recommended by the manufacturer), they will make contact with all four contacts of a minimum-length lamp, and that they retain a minimum-length lamp.

For details of R17d lampholders, see ANSI C81.62, Standard Sheet 2-777.

Testing
Insert the gauge into holders to check for illumination of the lamp IL in the test circuit.

Copyright National Electrical Manufacturers Association
Provided by IHS under license with NEMA
No reproduction or networking permitted without license from IHS
Not for Resale

"Go" Ring Gauge for SX4 Submidget-Flanged-Based Lamps

The drawing is intended only to illustrate the essential dimensions of the gauge.

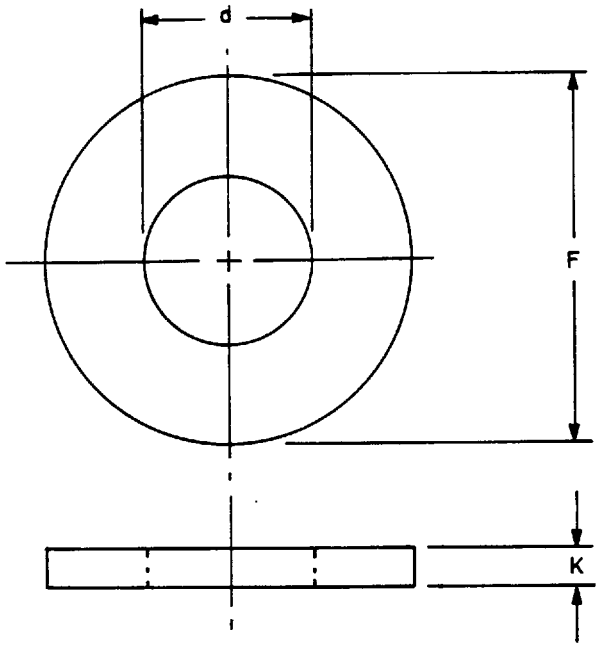

Reference	Dimension in	Tolerance in	Nearest metric equivalent mm
F	2.4	approx	61
K	0.107	+0.001	2.72
d	0.159	+0.0005	4.04

Mass lb	Tolerance	Nearest Metric Equivalent kg
0.14	±10%	0.0635

Purpose
To check the maximum major diameter of the cylindrical shell on finished lamps.

For details of SX4 bases, see ANSI C81.61, Standard Sheet 1-850.

Testing
Place the gauge over the bulb end of a lamp. Check for "free fall" of gauge and base rim height.

Copyright National Electrical Manufacturers Association
Provided by IHS under license with NEMA
No reproduction or networking permitted without license from IHS
Not for Resale

"Not-Go" Ring Gauge for SX4 Submidget-Flanged-Based Lamps

The drawing is intended only to illustrate the essential dimensions of the gauge.

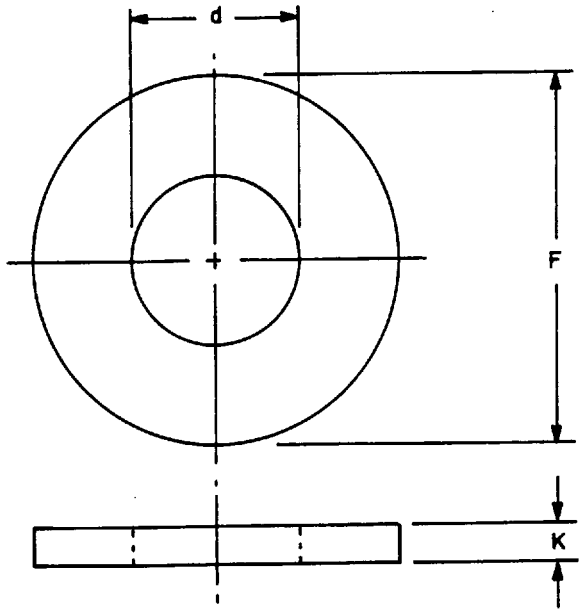

Reference	Dimension in	Tolerance in	Nearest metric equivalent mm
F	2.4	approx	61
K	0.107	±0.001	2.72
d	0.153	−0.0005	3.89

Mass lb	Tolerance	Nearest Metric Equivalent kg
0.14	±10%	0.0635

Purpose
To check the minimum major diameter of the cylindrical shell on finished lamps.

For details of the SX4 bases, see ANSI C81.61, Standard Sheet 1-850.

Testing
Place gauge over the bulb end of the lamp. Check that the gauge will not "free fall" beyond the base rim.

Copyright National Electrical Manufacturers Association
Provided by IHS under license with NEMA
No reproduction or networking permitted without license from IHS
Not for Resale

GAUGE "A" FOR LAMPHOLDERS

S14s

Dimensions in millimetres

The drawing is intended only to illustrate the dimensions essential for interchangeability.

For details of holders S14s, see sheet 7005-112.

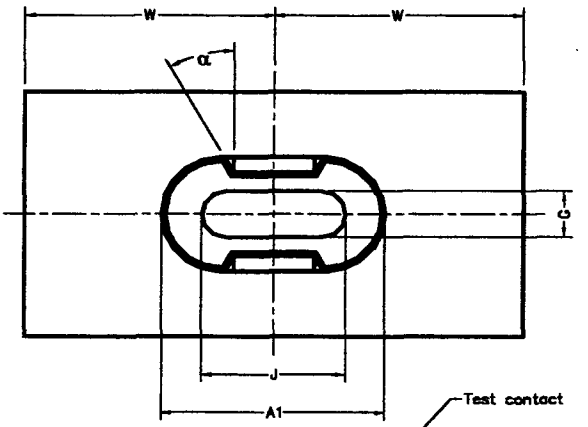

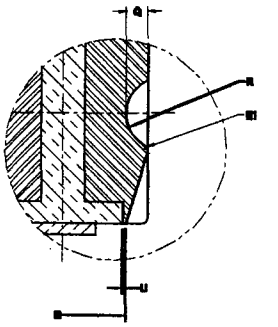

Detail a

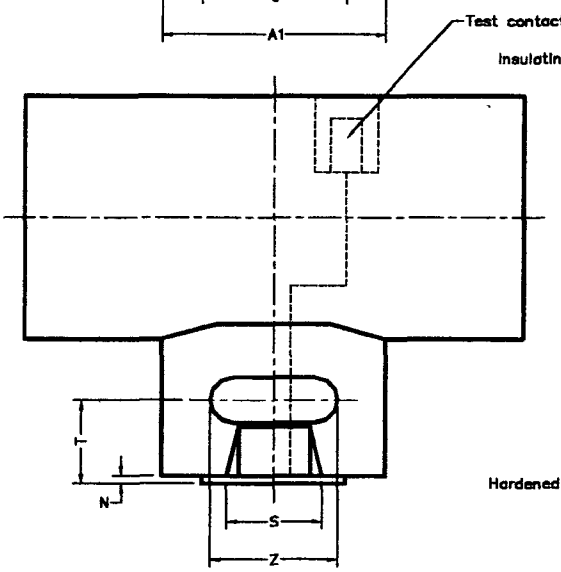

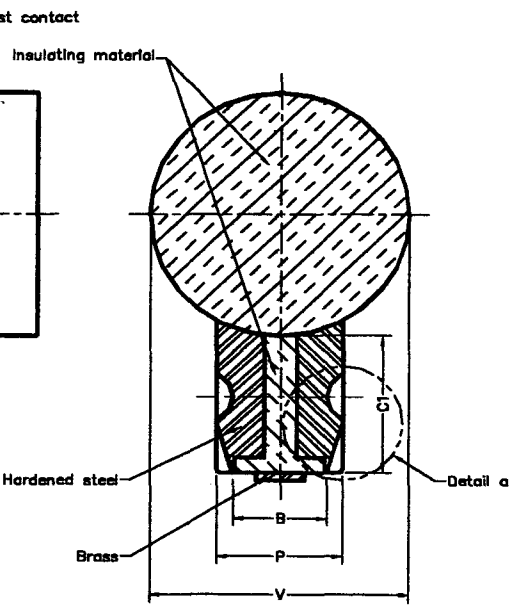

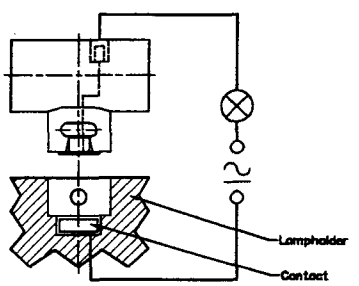

Test Circuit

For hardened steel parts:
- surface finish: 0,4 μm (see ISO 468);
- hardness (after tempering): Rockwell cone 55 min.

Copyright National Electrical Manufacturers Association
Provided by IHS under license with NEMA
No reproduction or networking permitted without license from IHS
Not for Resale

GAUGE "A" FOR LAMPHOLDERS

S14s

Dimensions in millimetres

Reference	Dimension	Tolerance
A1	26,1	+ 0,05 - 0,0
B	11,5	+ 0,02 - 0,0
C1	16,5	+ 0,0 - 0,05
G	4,0	+ 0,03 - 0,03
J	16,7	+ 0,03 - 0,03
N	0,5	+ 0,03 - 0,03
P	14,0	+ 0,02 - 0,0
Q	2,2	+ 0,05 - 0,0
R	3,5	+ 0,03 - 0,03
R1	0,5	+ 0,03 - 0,03
S	11,0	+ 0,0 - 0,02
T	10,5	+ 0,05 - 0,0
U	0 5	+ 0,1 - 0,1
V	31	+ 0,1 - 0,1
W	29	+ 0,1 - 0,1
Z	13	+ 0,0 - 0,1
α	45°	+ 30 ' - 30 '

PURPOSE: To check contact-making and the maximum insertion and withdrawal forces with regard to a "maximum" cap in lampholders S14s.

TESTING: It shall be possible to fully insert the gauge into the lampholder with a force not exceeding 25 N (under consideration).
In this position the indicator lamp shall light.
It shall then be possible to withdraw the gauge with a force not exceeding 25 N (under consideration).

7006-112A-1

Copyright National Electrical Manufacturers Association
Provided by IHS under license with NEMA
No reproduction or networking permitted without license from IHS
Not for Resale

GAUGE "B" FOR LAMPHOLDERS

S14s

Dimensions in millimetres
The drawing is intended only to illustrate the dimensions essential for interchangeability.
For details of holders S14s, see sheet 7005-112.

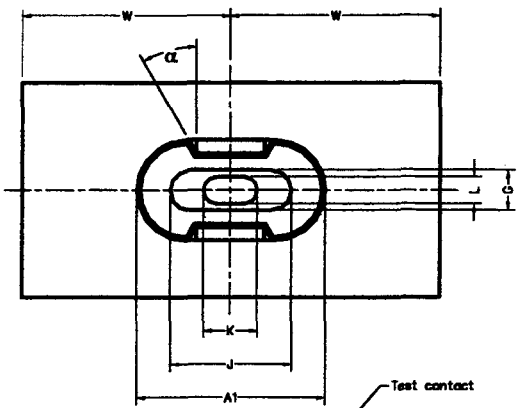

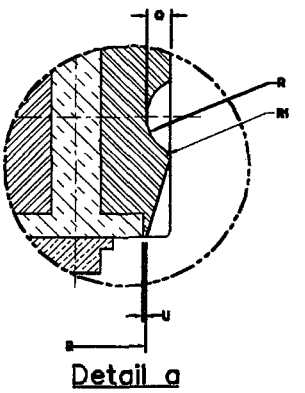

Detail a

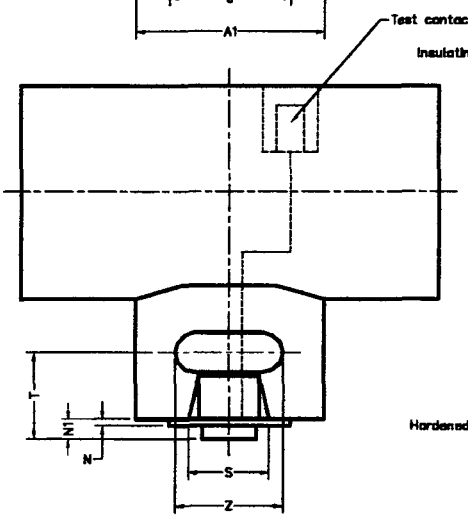

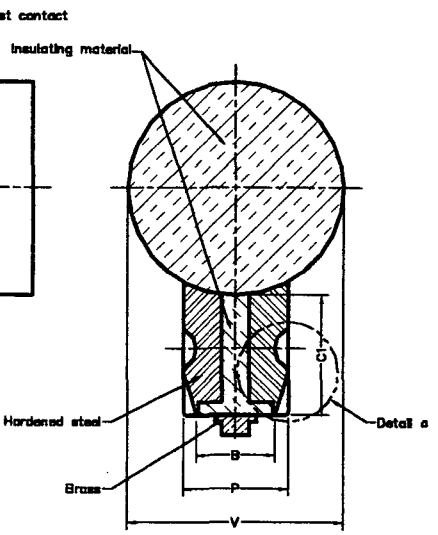

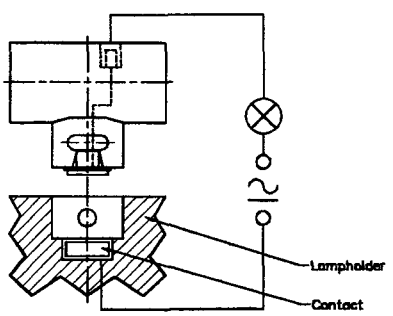

Test Circuit

For hardened steel parts:
- surface finish: 0,4 µm (see ISO 468);
- hardness (after tempering): Rockwell cone 55 min.

7006-112B-1

Copyright National Electrical Manufacturers Association
Provided by IHS under license with NEMA
No reproduction or networking permitted without license from IHS
Not for Resale

GAUGE "B" FOR LAMPHOLDERS

S14s

Dimensions in millimetres

Reference	Dimension	Tolerance
A1	25,5	+ 0,0 - 0,05
B	10,5	+ 0,0 - 0,02
C1	17,5	+ 0,05 - 0,0
G	4,5	+ 0,03 - 0,03
J	16,5	+ 0,03 - 0,03
K	7,2	+ 0,03 - 0,03
L	3,2	+ 0,03 - 0,03
N	0,5	+ 0,03 - 0,03
N1	1,5	+ 0,03 - 0,03
P	13,5	+ 0,0 - 0,02
Q	1,5	+ 0,0 - 0,05
R	4,5	+ 0,03 - 0,03
R1	1,0	+ 0,03 - 0,03
S	13	+ 0,1 - 0,0
T	8,5	+ 0,0 - 0,05
U	0,5	+ 0,1 - 0,1
V	31	+ 0,1 - 0,1
W	29	+ 0,1 - 0,1
Z	15	+ 0,1 - 0,0
α	45°	+ 30 ' - 30 '

PURPOSE: To check contact-making and the minimum withdrawal force with regard to a "minimum" cap in lampholders S14s.

TESTING: With the gauge fully inserted into the lampholder, the indicator lamp shall light. It shall then not be possible to withdraw the gauge with a force less than 10 N (under consideration).

7006-112B-1

Copyright National Electrical Manufacturers Association
Provided by IHS under license with NEMA
No reproduction or networking permitted without license from IHS
Not for Resale

GAUGE "C" FOR LAMPHOLDERS

S14s

Dimensions in millimetres

The drawing is intended only to illustrate the dimensions essential for interchangeability.

For details of holders S14s, see sheet 7005-112.

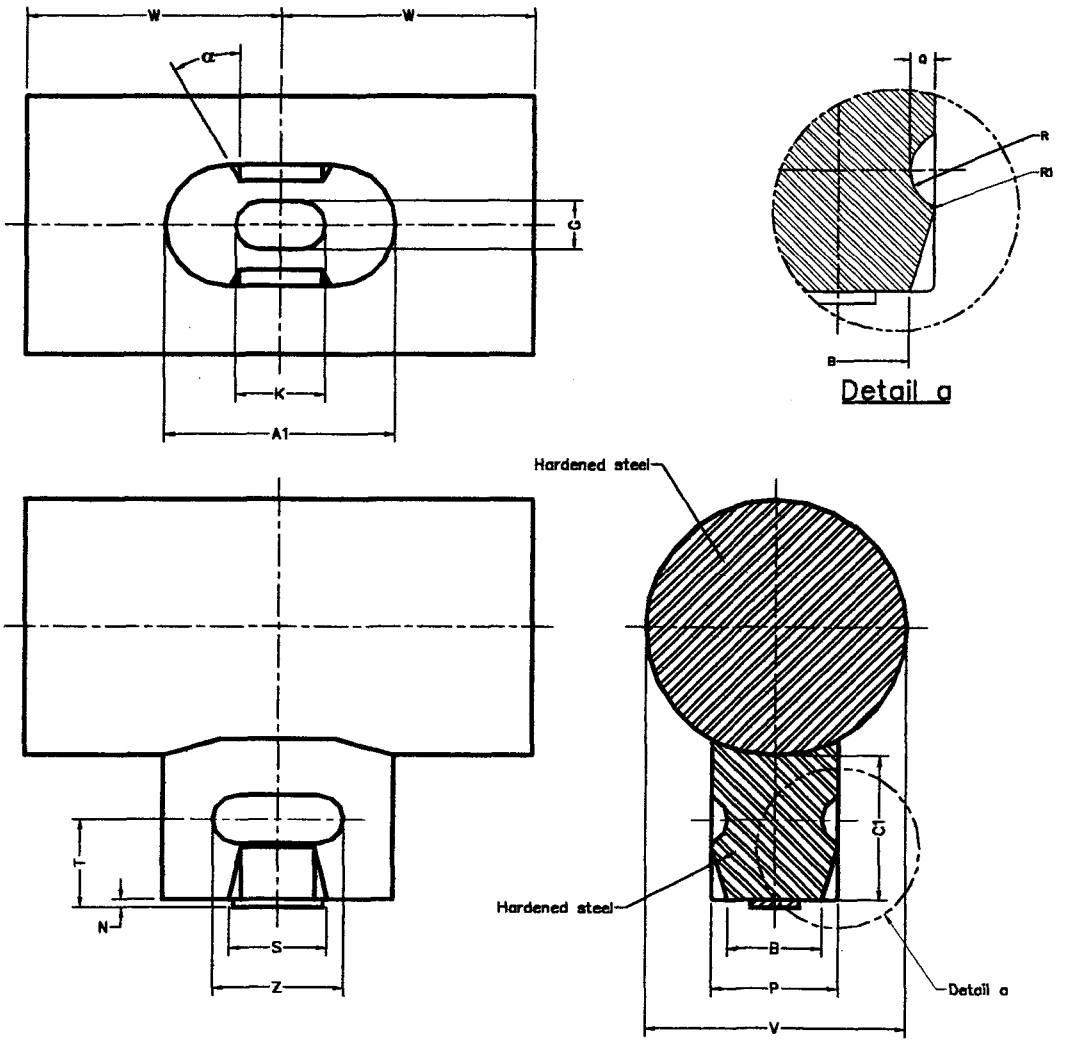

For hardened steel parts:

- surface finish: 0,4 μm (see ISO 468);
- hardness (after tempering): Rockwell cone 55 min.

Copyright National Electrical Manufacturers Association
Provided by IHS under license with NEMA
No reproduction or networking permitted without license from IHS
Not for Resale

GAUGE "C" FOR LAMPHOLDERS

S14s

Dimensions in millimetres

Reference	Dimension	Tolerance
A1	27,1	+ 0,05 - 0,0
B	11,5	+0,02 - 0,0
C1	16,5	+ 0,0 - 0,05
G	4,5	+ 0,03 - 0,03
K	7,2	+ 0,03 - 0,03
N	0,5	+ 0,03 - 0,03
P	14,5	+ 0,02 - 0,0
Q	2,2	+ 0,05 - 0,0
R	3,5	+ 0,03 - 0,03
R1	0,5	+ 0,03 - 0,03
S	10,0	+ 0,0 - 0,02
T	10,5	+ 0,05 - 0,0
V	31	+ 0,1 - 0,1
W	29	+ 0,1 - 0,1
Z	12,0	+ 0,0 - 0,02
α	45°	+ 30 ' - 30 '

NOTE - The dimensions of this gauge are based on the dimension of the cap S14s in combination with the allowable mounting tolerances (including misalignment) for the two caps on the glass tube of the lamp.

PURPOSE: To check inflexible lampholders S14s with regard to insertion and withdrawal.

TESTING: It shall be possible to fully insert the gauge into the lampholder with a force not exceeding 25 N (under consideration). After the gauge has been fully inserted into the lampholder, it shall be possible to withdraw the gauge with a force between 10 N and 25 N (under consideration).

Copyright National Electrical Manufacturers Association
Provided by IHS under license with NEMA
No reproduction or networking permitted without license from IHS
Not for Resale

GAUGE "A" FOR LAMPHOLDERS

S14d

Dimensions in millimetres

The drawing is intended only to illustrate the dimensions essential for interchangeability.

For details of holders S14d, see sheet 7005-112.

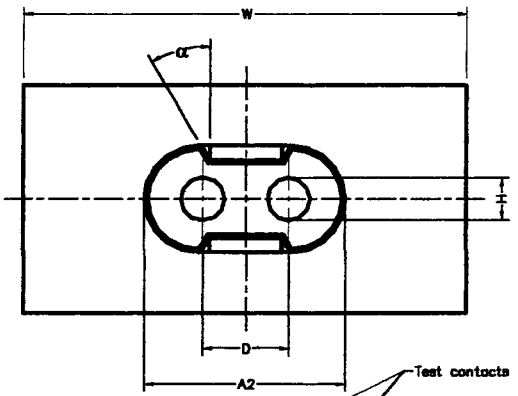

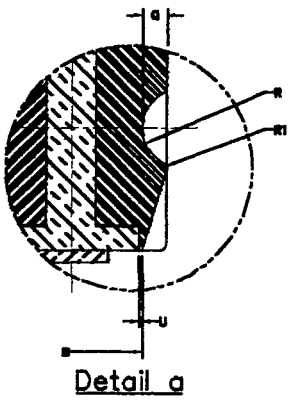

Detail a

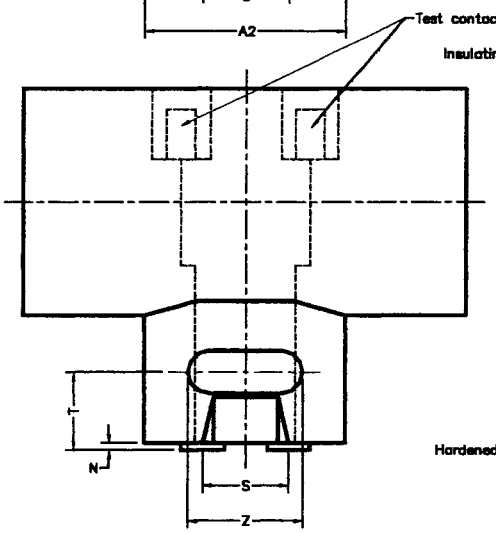

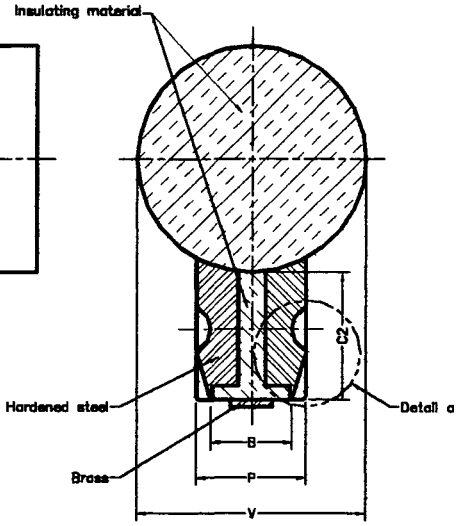

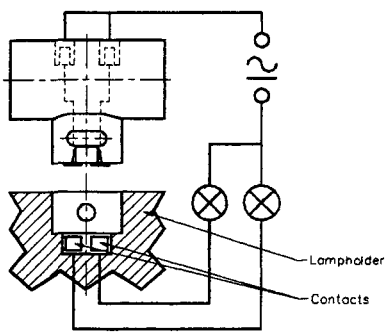

Test Circuit

For hardened steel parts:
- surface finish: 0,4 µm (see ISO 468);
- hardness (after tempering): Rockwell cone 55 min.

7006-112D-1

Copyright National Electrical Manufacturers Association
Provided by IHS under license with NEMA
No reproduction or networking permitted without license from IHS
Not for Resale

GAUGE "A" FOR LAMPHOLDERS

S14d

Dimensions in millimetres

Reference	Dimension	Tolerance
A2	30,3	+ 0,05 - 0,0
B	11,5	+ 0,02 - 0,0
C2	17,5	+ 0,0 - 0,05
D	16,0	+ 0,03 - 0,03
H	5,1	+ 0,03 - 0,03
N	0,5	+ 0,03 - 0,03
P	14,0	+ 0,02 - 0,0
Q	2,2	+ 0,05 - 0,0
R	3,5	+ 0,03 - 0,03
R1	0,5	+ 0,03 - 0,03
S	11,0	+ 0,0 - 0,02
T	10,5	+ 0,05 - 0,0
U	0,5	+ 0,1 - 0,1
V	31	+ 0,1 - 0,1
W	58	+ 0,1 - 0,1
Z	13	+ 0,0 - 0,1
α	45°	+ 30 ' - 30 '

PURPOSE: To check contact-making and the maximum insertion and withdrawal forces with regard to a "maximum" cap in lampholders S14d.

TESTING: It shall be possible to fully insert the gauge into the lampholder with a force not exceeding 25 N (under consideration). In this position the indicator lamps shall light. It shall then be possible to withdraw the gauge with a force not exceeding 25 N (under consideration).

Copyright National Electrical Manufacturers Association
Provided by IHS under license with NEMA
No reproduction or networking permitted without license from IHS
Not for Resale

GAUGES "B" AND "B2" FOR LAMPHOLDERS

S14d

Dimensions in millimetres

The drawing is intended only to illustrate the dimensions essential for interchangeability.

For details of holders S14d, see sheet 7005-112.

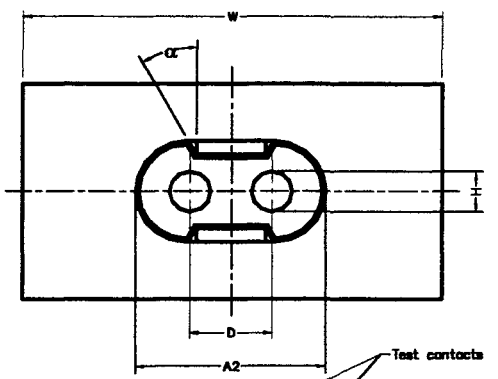

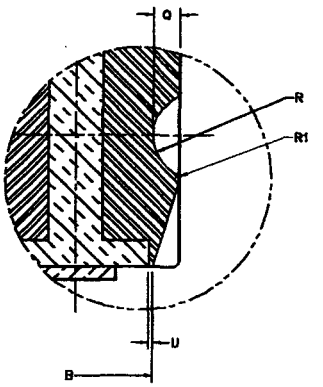

Detail α

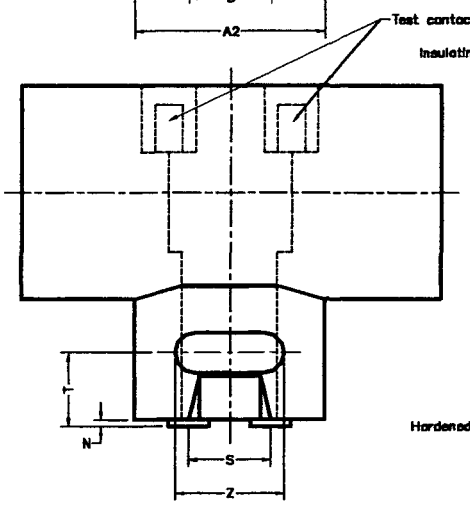

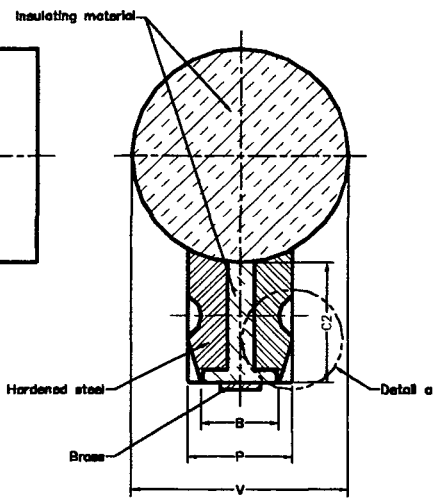

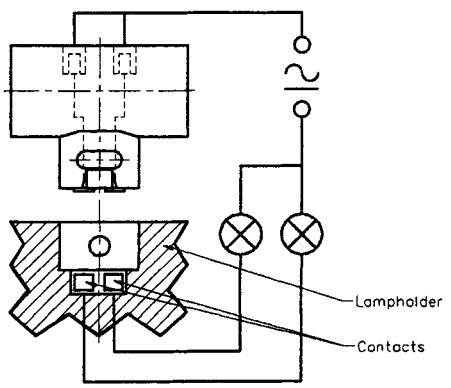

Test Circuit

For hardened steel parts:
- surface finish: 0,4 µm (see ISO 468);
- hardness (after tempering): Rockwell cone 55 min.

7006-112E-1

Copyright National Electrical Manufacturers Association
Provided by IHS under license with NEMA
No reproduction or networking permitted without license from IHS
Not for Resale

GAUGES "B1" AND "B2" FOR LAMPHOLDERS

S14d

Dimensions in millimetres

Gauge B1		
Reference	Dimension	Tolerance
A2	29,3	+ 0,0 - 0,05
B	10,5	+0,0 - 0,02
C2	18,5	+ 0,05 - 0,0
D	15,8	+ 0,03 - 0,03
H	5,0	+ 0,0 - 0,02
N	1,5	+ 0,03 - 0,03
P	13,5	+ 0,0 - 0,02
Q	1,5	+ 0,0 - 0,05
R	4,5	+ 0,03 - 0,03
R1	1,0	+ 0,03 - 0,03
S	13	+ 0,1 - 0,0
T	8,5	+ 0,0 - 0,05
U	0,5	+ 0,1 - 0,1
V	31	+ 0,1 - 0,1
W	58	+ 0,1 - 0,1
Z	15	+ 0,1 - 0,0
α	45°	+ 30 ' - 30 '

Gauge B2		
Reference	Dimension	Tolerance
A2	29,3	+ 0,0 - 0,05
B	10,5	+0,0 - 0,02
C2	18,5	+ 0,05 - 0,0
D	16,2	+ 0,03 - 0,03
H	5,0	+ 0,0 - 0,02
N	1,5	+ 0,03 - 0,03
P	13,5	+ 0,0 - 0,02
Q	1,5	+ 0,0 - 0,05
R	4,5	+ 0,03 - 0,03
R1	1,0	+ 0,03 - 0,03
S	13	+ 0,1 - 0,0
T	8,5	+ 0,0 - 0,05
U	0,5	+ 0,1 - 0,1
V	31	+ 0,1 - 0,1
W	58	+ 0,1 - 0,1
Z	15	+ 0,1 - 0,0
α	45°	+ 30 ' - 30 '

PURPOSE: To check contact-making and the minimum withdrawal force with regard to a "minimum" cap in lampholders S14d.

TESTING: With the gauge fully inserted into the lampholder, the indicator lamp shall light. It shall then not be possible to withdraw the gauge with a force less than 10 N (under consideration.)

Copyright National Electrical Manufacturers Association
Provided by IHS under license with NEMA
No reproduction or networking permitted without license from IHS
Not for Resale

W2.1x4.9d Minimum and Maximum Retention Gauges

The drawing is intended only to illustrate the essential dimensions of the gauge.

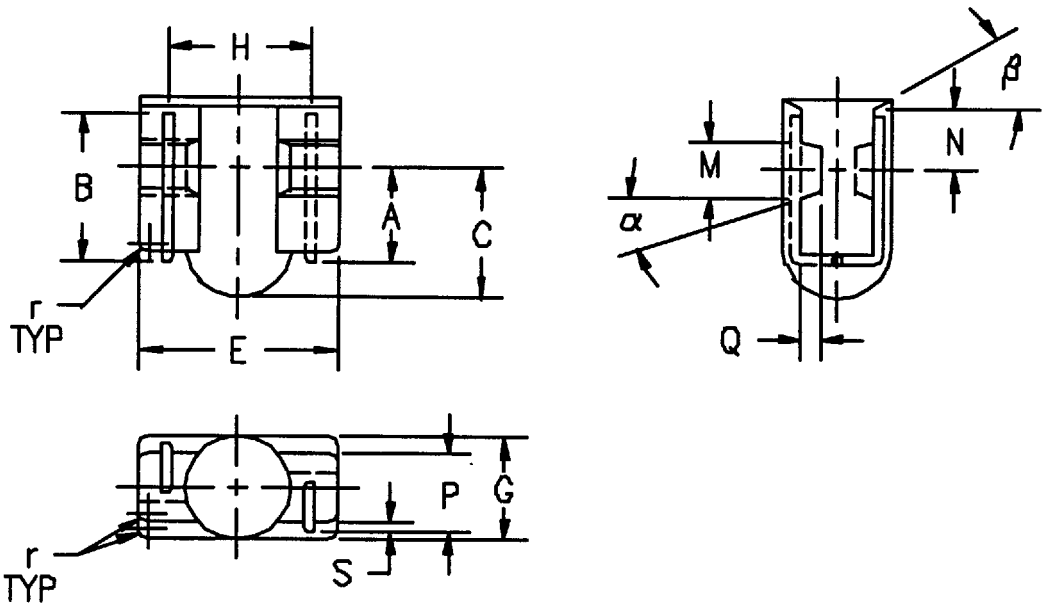

Copyright National Electrical Manufacturers Association
Provided by IHS under license with NEMA
No reproduction or networking permitted without license from IHS
Not for Resale

	Standard Dimensions (millimeters)		Nearest Equivalent (inches)	
Reference	Min Gauge	Max Gauge	Min Gauge	Max Gauge
A	2.18 (-0.01)	3.04 (+0.01)	0.085 (-0.0004)	0.119 (+0.0004)
B	3.05 (-0.01)	5.08 (+0.01)	0.120 (-0.0004)	0.200 (+0.0004)
C	2.18 (-0.01)	4.88 (+0.01)	0.085 (-0.0004)	0.192 (+0.0004)
E	5.08 (-0.01)	5.08 (+0.01)	0.200 (-0.0004)	0.200 (+0.0004)
G	2.52 (-0.01)	3.10 (+0.01)	0.100 (-0.0004)	0.122 (+0.0004)
H	3.30 (NOM)	3.30 (NOM)	0.130 (NOM)	0.130 (NOM)
M	1.50 (+0.03)	1.50 (+0.03)	0.060 (+0.0012)	0.060 (+0.0012)
N	1.65 (-0.01)	1.65 (+0.01)	0.065 (-0.0004)	0.065 (+0.0004)
P	1.78 (-0.01)	2.28 (+0.01)	0.070 (-0.0004)	0.090 (+0.0004)
Q	0.50 (+0.01)	0.50 (+0.01)	0.020 (+0.0004)	0.020 (+0.0004)
S	0.30 (NOM)	0.30 (NOM)	0.012 (NOM)	0.012 (NOM)
r	0.25 (NOM)	0.25 (NOM)	0.010 (NOM)	0.010 (NOM)
α	15 deg (±3)	15 deg (±3)	15 deg (±3)	15 deg (±3)
β	30 deg (±1)	30 deg (±1)	30 deg (±1)	30 deg (±1)

Purpose

To check P8.25d Bases or other types of holders or sockets intended to accept "removable type" W2.1x4.9d Wedge Base Lamps.

Base (reference)

For W2.9x4.1 Wedge Base on finished lamp see ANSI C81.61h-1996 Standard Sheet 1-900. For P8.25d base, see ANSI C81.61-19xx Standard Sheet 1-530.

Lamp (reference)

See ANSI C81.61h-1996 Standard Sheet 1-900-1.

Testing

Insert both the minimum and maximum gauges into the base. The base shall accept both gauges.

Copyright National Electrical Manufacturers Association
Provided by IHS under license with NEMA
No reproduction or networking permitted without license from IHS
Not for Resale

W2.1x9.2d Minimum and Maximum Retention Gauges

The drawing is intended only to illustrate the essential dimensions of the gauge.

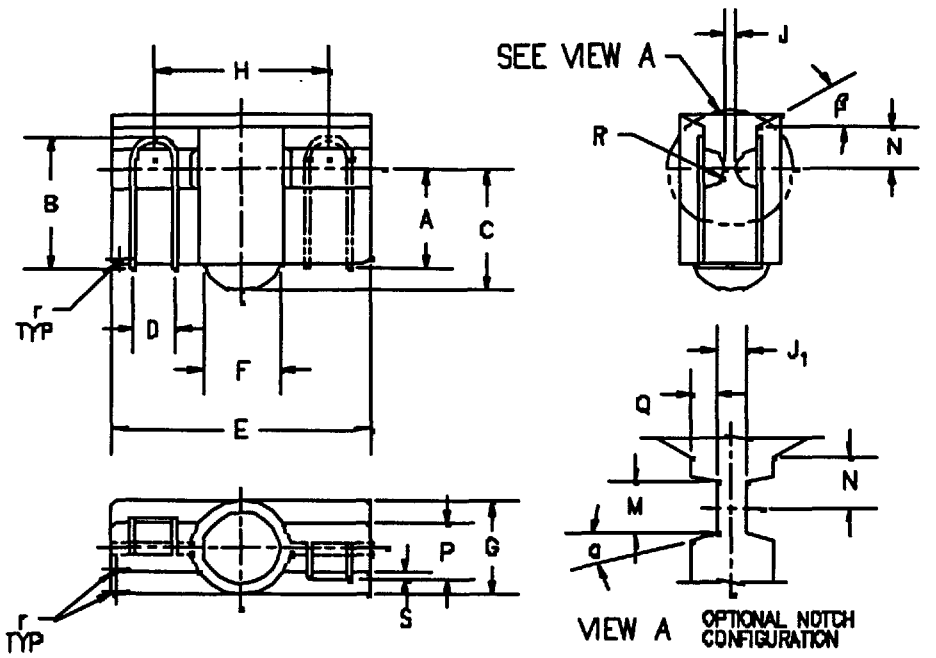

Reference	Standard Dimensions (millimeters)		Nearest Equivalent (inches)	
	Min Gauge	Max Gauge	Min Gauge	Max Gauge
A	3.68 (-0.01)	4.45 (+0.01)	0.145 (-0.0004)	0.175 (+0.0004)
B	5.01 (-0.01)	6.10 (+0.01)	0.197 (-0.0004)	0.240 (+0.0004)
C	3.68 (-0.01)	6.10 (+0.01)	0.145 (-0.0004)	0.240 (+0.0004)
D	1.50 (NOM)	1.50 (NOM)	0.060 (NOM)	0.060 (NOM)
E	9.50 (-0.01)	9.50 (+0.01)	0.374 (-0.0004)	0.375 (+0.0004)
F	3.05 (-0.01)	3.05 (+0.01)	0.120 (-0.0004)	0.120 (+0.0004)
G	3.30 (-0.01)	4.06 (+0.01)	0.130 (-0.0004)	0.160 (+0.0004)
H	5.60 (NOM)	5.60 (NOM)	0.220 (NOM)	0.220 (NOM)
J	0.80 (NOM)	0.80 (NOM)	0.031 (NOM)	0.031 (NOM)
J_1	1.20 (NOM)	1.20 (NOM)	0.047 (NOM)	0.047 (NOM)
M	1.25 (+0.03)	1.25 (+0.03)	0.050 (+0.0012)	0.050 (+0.0002)
N	1.65 (-0.01)	1.65 (+0.01)	0.065 (-0.0004)	0.065 (+0.0004)
P	1.91 (-0.01)	2.41 (+0.01)	0.075 (-0.0004)	0.095 (+0.0004)
Q	0.64 (+0.03)	0.64 (+0.03)	0.025 (+0.0012)	0.025 (+0.0012)
R	0.76 (±0.13)	0.76 (±0.13)	0.030 (±0.005)	0.030 (±0.005)
S	0.30 (NOM)	0.30 (NOM)	0.012 (NOM)	0.012 (NOM)
r	0.25 (NOM)	0.25 (NOM)	0.010 (NOM)	0.010 (NOM)
α	15 deg (±3)	15 deg (±3)	15 deg (±3)	15 deg (±3)
β	30 deg (±1)	30 deg (±1)	30 deg (±1)	30 deg (±1)

Copyright National Electrical Manufacturers Association
Provided by IHS under license with NEMA
No reproduction or networking permitted without license from IHS
Not for Resale

Purpose

To check P12.4d Bases or other types of holders or sockets intended to accept "removable type" W2.1x9.2d Wedge Base Lamps.

Base (reference)

For P12.9d base, see ANSI C81.61x-19xx, SS 1-550-x.
For W2.1x9.2d for wedge base on finished lamps, see ANSI C81.61h-1996, SS 1-920-1.

Lamp (reference)

See ANSI C81.61h-1996, SS 1-920-1.

Testing

Insert both the minimum and maximum gauges into the base. The base shall accept both gauges.

Copyright National Electrical Manufacturers Association
Provided by IHS under license with NEMA
No reproduction or networking permitted without license from IHS
Not for Resale

"GO" GAUGES FOR CHECKING BASES

CALIBRES "ENTRE" POUR LA VERIFICATION DES SOCLES

W2.5x16

Dimensions in millimetres - Dimensions en millimètres

The drawing is intended only to illustrate the dimensions essential for interchangeability.
Le dessin a pour seul but d'illustrer les dimensions essentielles pour l'interchangeabilité.

For details of bases W2.5x16, see sheet 7004-104.
Pour les détails des socles W2.5x16, voir feuille 7004-104.

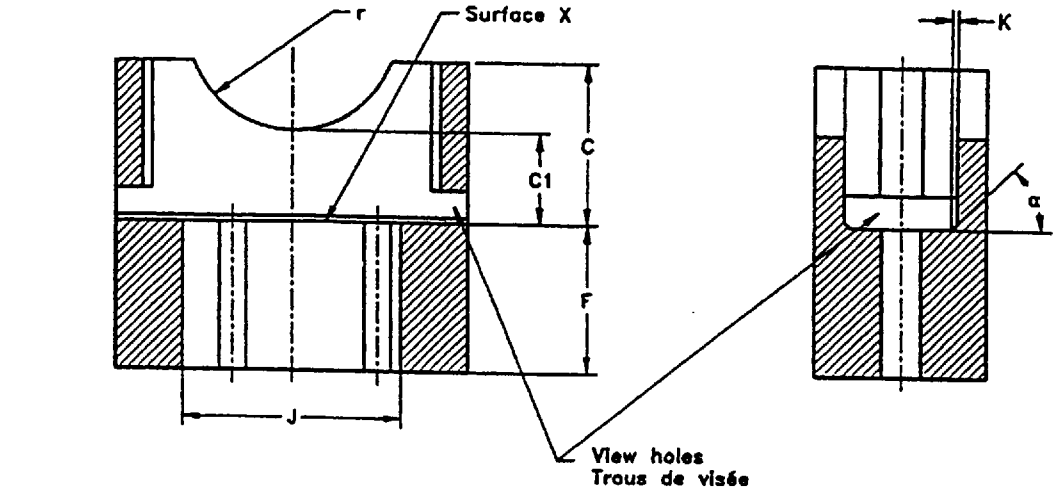

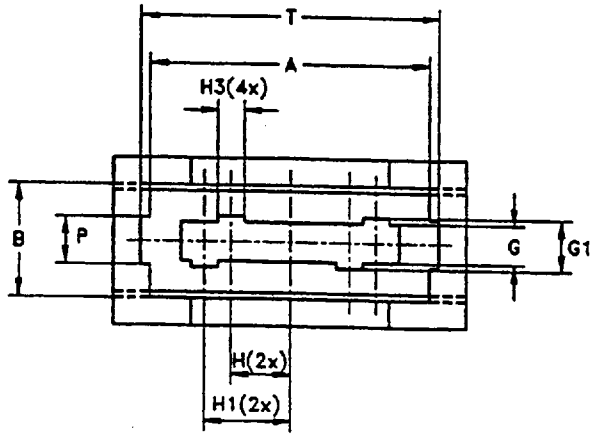

Copyright National Electrical Manufacturers Association
Provided by IHS under license with NEMA
No reproduction or networking permitted without license from IHS
Not for Resale

"GO" GAUGES FOR CHECKING BASES

CALIBRES "ENTRE" POUR LA VERIFICATION DES SOCLES

W2.5x16

Dimensions in millimetres - Dimensions en millimètres

Reference	Dimension	Tolerance
A	19,6	+ 0,04 - 0,0
B	8,2	+ 0,02 - 0,0
C	12,0	+ 0,1 - 0,1
C1	6,8	+ 0,0 - 0,1
F	9,4	+ 0,04 - 0,0
G	2,8	+ 0,01 - 0,0
G1	4,3	+ 0,01 - 0,0
H	4,45	+ 0,01 - 0,01
H1	6,45	+ 0,01 - 0,01

Reference	Dimension	Tolerance
H3	2	+ 0,1 - 0,1
J	16,25	+ 0,01 - 0,0
K	0,9	+ 0,02 - 0,0
P (W2.5x16d)	5,6	+ 0,02 - 0,0
P (W2.5x16q)	3,1	+ 0,02 - 0,0
T	22,3	+ 0,02 - 0,0
r	8,1	+ 0,1 - 0,1
α	49°	+ 1° - 1°

PURPOSE: To check the dimensions of bases W2.5x16d and W2.5x16q.

TESTING: It shall be possible to insert the base into the wider opening of the relevant gauge.
In this position there shall be contact between the reference plane of the base and surface X of the gauge.

BUT: Vérification des dimensions des socles W2.5x16d et W2.5x16q.

ESSAI: Il doit être possible d'insérer le socle dans l'ouverture la plus large du calibre correspondant.
Dans cette position le contact entre le plan de référence du socle et la surface X du calibre doit se produire.

Copyright National Electrical Manufacturers Association
Provided by IHS under license with NEMA
No reproduction or networking permitted without license from IHS
Not for Resale

"GO" GAUGES FOR CHECKING LAMPHOLDERS

CALIBRES "ENTRE" POUR LA VERIFICATION DES DOUILLES

W2.5x16

Dimensions in millimetres - Dimensions en millimètres

The drawing is intended only to illustrate the dimensions essential for interchangeability.
Le dessin a pour seul but d'illustrer les dimensions essentielles pour l'interchangeabilité.

For details of holders W2.5x16, see sheet 7005-104.
Pour les détails des douilles W2.5x16, voir feuille 7005-104.

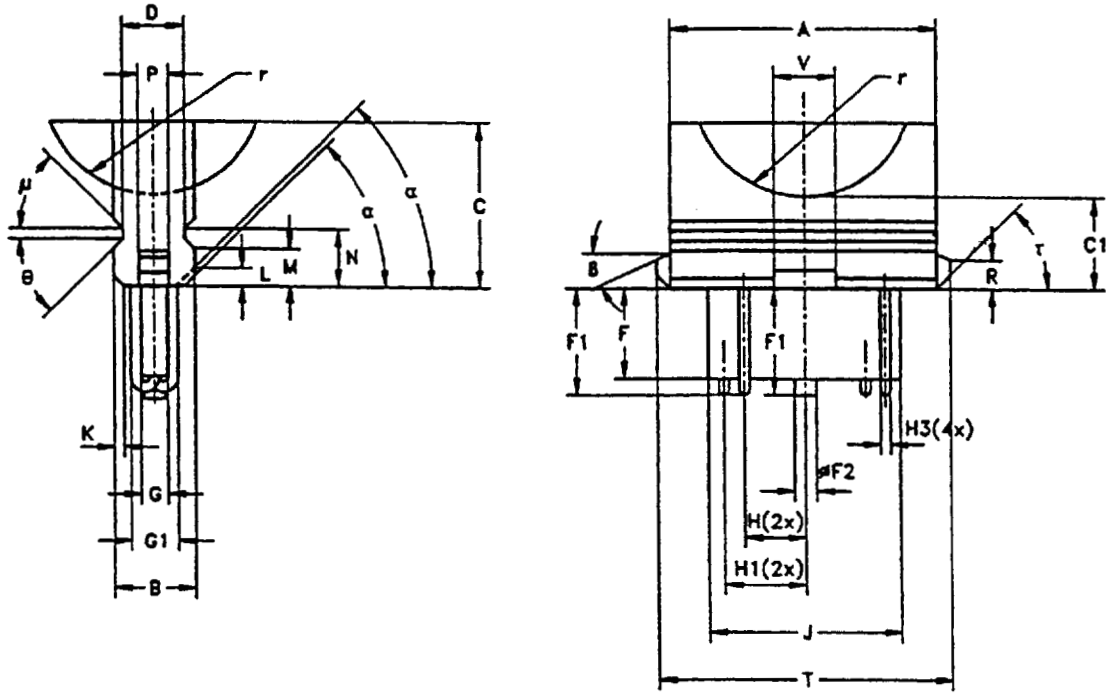

7006-104A-1

Copyright National Electrical Manufacturers Association
Provided by IHS under license with NEMA
No reproduction or networking permitted without license from IHS
Not for Resale

"GO" GAUGES FOR CHECKING LAMPHOLDERS

CALIBRES "ENTRE" POUR LA VERIFICATION DES DOUILLES

W2.5x16

Dimensions in millimetres - Dimensions en millimètres

Reference	Dimension	Tolerance
A	19,7	+ 0,0 - 0,05
B	8,25	+ 0,0 - 0,02
C	12,0	+ 0,1 - 0,1
C1	6,8	+ 0,1 - 0,0
D	6,32	+ 0,0 - 0,02
F	9,44	+ 0,0 - 0,04
F1	10,6	+ 0,0 - 0,1
F2	4,0	+ 0,1 - 0,1
G	2,78	+ 0,0 - 0,02
G1	4,33	+ 0,0 - 0,02
H	4,45	+ 0,01 - 0,01
H1	6,45	+ 0,01 - 0,01
H3	1,9	+ 0,04 - 0,04
J	16,28	+ 0,0 - 0,02

Reference	Dimension	Tolerance
K	0,95	+ 0,0 - 0,02
L	1,8	+ 0,1 - 0,0
M	3,85	+ 0,02 - 0,0
N	5,7	+ 0,02 - 0,0
P (W2.5x16d)	5,65	+ 0,0 - 0,03
P (W2.5x16q)	3,15	+ 0,0 - 0,03
R	3,0	+ 0,01 - 0,01
T	22,37	+ 0,0 - 0,05
V	5,6	+ 0,1 - 0,0
r	8,1	+ 0,1 - 0,1
α	45°	+ 1° - 1°
ß	25°	+ 1° - 1°
γ	45°	+ 1° - 1°
θ	45°	+ 1° - 1°
μ	41°	+ 1° - 1°

PURPOSE: To check the dimensions of lampholders W2.5x16d and W2.5x16q.

TESTING: It shall be possible to insert the relevant gauge into the lampholder until fully seated.

BUT: Vérification des dimensions des douilles W2.5x16d et W2.5x16q.

ESSAI: Il doit être possible d'insérer le calibre correspondant jusqu'au fond de la douille.

Copyright National Electrical Manufacturers Association
Provided by IHS under license with NEMA
No reproduction or networking permitted without license from IHS
Not for Resale

"GO" GAUGE FOR A COMBINED PAIR OF LAMPHOLDERS

CALIBRE "ENTRE" POUR L'ENSEMBLE DE DEUX DOUILLES

W4.3x8.5d

Dimensions in millimetres - Dimensions en millimètres

The drawing is intended only to illustrate the essential dimensions of the gauge.
Le dessin a pour seul but d'illustrer les dimensions essentielles du calibre.

For details of lampholders W4.3x8.5d, see sheet 7005-115.
Pour les détails des douilles W4.3x8.5d, voir feuille 7005-115.

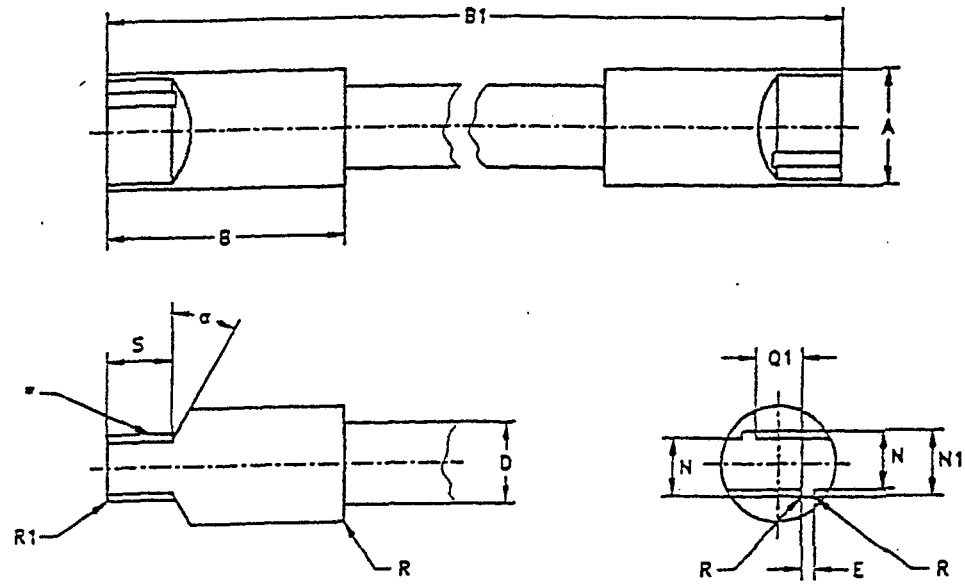

PURPOSE: To check a combined pair of lampholders W4.3x8.5d with regard to the entry of a maximum lamp.

TESTING: It shall be possible to insert the gauge into a combined pair of lampholders. For the maximum force to be applied, see holder sheet 7005-115.

NOTE - Testing shall be carried out with the lampholders mounted at minimum distance according to the lampholder manufacturer's instructions.

Reference	Dimension	Tolerance
A	8,5	+ 0,02 - 0,0
B	17,5	+ 0,5 - 0,0
B1	219,3 (1)	+ 0,05 - 0,0
D	7,0	+ 0,2 - 0,2
E	1,0	+ 0,05 - 0,0
N	4,3	+ 0,02 - 0,0
N1	4,85	+ 0,02 - 0,0
Q1	3,4	+ 0,0 - 0,1
R	0,3	+ 0,1 - 0,1
R1	0,8	+ 0,1 - 0,1
S	4,8	+ 0,0 - 0,02
α	30°	+ 1° - 1°

(1) This value is equal to dimension Bmax of a 6 W lamp (see IEC 81). When testing a combined pair of lampholders mounted in a luminaire, the value of dimension B1 shall be equal to dimension Bmax of the related lamp, with a tolerance of + 0,05 mm.

* Material within dimension S: hardened steel.
Hardness (after tempering): Rockwell cone 55 min.
Surface finish: 0,4 μm.

BUT: Vérification de l'acceptation d'une lampe "maximale" dans l'ensemble de deux douilles W4.3x8.5d.

ESSAI: Il doit être possible d'insérer le calibre dans un ensemble de deux douilles. Pour la force maximale à appliquer, voir la feuille de la douille 7005-115.

NOTE - L'essai doit être effectué les douilles étant montées à la distance minimale, conformément aux instructions du fabricant de douilles.

(1) Cette valeur est égale à la dimension Bmax d'une lampe de 6 W (voir la CEI 81). Lorsqu'un ensemble de deux douilles montées sur un luminaire est vérifié, la valeur de la dimension B1 doit être égale à la dimension Bmax de la lampe correspondante, avec une tolérance de + 0,05 mm.

* Matériau sur dimension S: acier trempé.
Dureté (après la trempe): Cône Rockwell 55 min.
Finition: 0,4 μm.

Copyright National Electrical Manufacturers Association
Provided by IHS under license with NEMA
No reproduction or networking permitted without license from IHS
Not for Resale

GAUGE FOR CHECKING MAXIMUM INSERTION AND WITHDRAWAL FORCE IN LAMPHOLDERS FOR LATERAL INSERTION
CALIBRE POUR LA VERIFICATION DE LA FORCE MAXIMALE D'INSERTION ET D'EXTRACTION DANS LES DOUILLES A INSERTION LATERALE W4.3x8.5d

Dimensions in millimetres - Dimensions en millimètres

The drawing is intended only to illustrate the essential dimensions of the gauge.
Le dessin a pour seul but d'illustrer les dimensions essentielles du calibre.

For details of lampholders W4.3x8.5d, see sheet 7005-115.
Pour les détails des douilles W4.3x8.5d, voir feuille 7005-115.

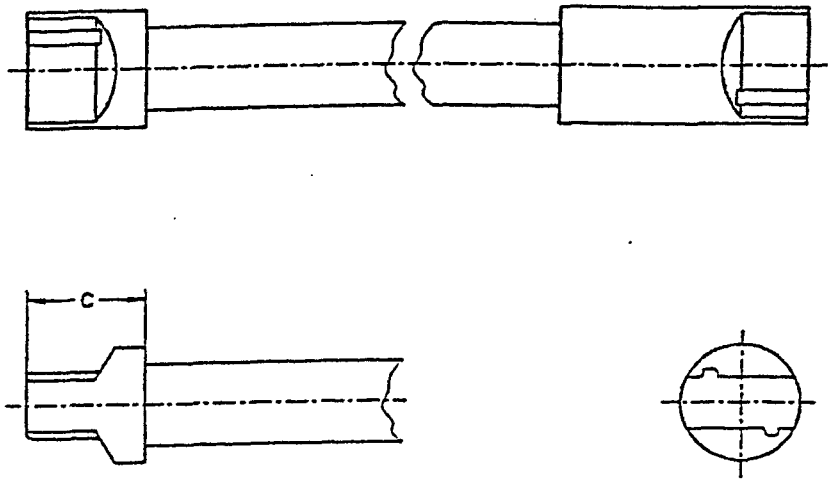

PURPOSE: To check in a combined pair of lampholders W4.3x8.5d for lateral insertion, the maximum insertion and withdrawal force in the contact area of the holders.

TESTING: It shall be possible to insert the gauge into a combined pair of lampholders. The insertion force for each of the holders shall not exceed the maximum insertion force specified for this gauge on the holder sheet. It shall then be possible to withdrew the gauge with a force not exceeding the maximum withdrawal force specified for this gauge on the holder sheet.

NOTE - Testing shall be carried out with the lampholders mounted at minimum distance according to the lampholder manufacturer's instructions.

BUT: Vérification de la force maximale d'insertion et d'extraction dans la zone de contact des douilles dans un ensemble de deux douilles W4.3x8.5d à insertion latérale.

ESSAI: Il doit être possible d'insérer le calibre dans un ensemble de deux douilles. La force d'insertion pour chacune des douilles ne doit pas excéder la force d'insertion maximale spécifiée pour ce calibre sur la feuille de la douille. Il doit alors être possible d'extraire le calibre avec une force égale ou inférieure à la force maximale d'extraction spécifiée pour ce calibre sur la feuille de la douille.

NOTE - L'essai doit être effectué les douilles étant montées à la distance minimale, conformément aux instructions du fabricant de douilles.

Reference	Dimension	Tolerance
C*	7,5	+ 0,0 - 0,5

* For all other dimensions, see the "Go" gauge on sheet 7006-115.

* Pour toutes les autres dimensions, voir le calibre "Entre" sur la feuille 7006-115.

Copyright National Electrical Manufacturers Association
Provided by IHS under license with NEMA
No reproduction or networking permitted without license from IHS
Not for Resale

GAUGE FOR TESTING CONTACT-MAKING IN A COMBINED PAIR OF LAMPHOLDERS
CALIBRE POUR LA VERIFICATION DE LA REALITE DE CONTACT DANS UN ENSEMBLE DE DEUX DOUILLES
W4.3x8.5d

Dimensions in millimetres - Dimensions en millimètres

The drawing is intended only to illustrate the essential dimensions of the gauge.
Le dessin a pour seul but d'illustrer les dimensions essentielles du calibre.

For details of lampholders W4.3x8.5d, see sheet 7005-115.
Pour les détails des douilles W4.3x8.5d, voir feuille 7005-115.

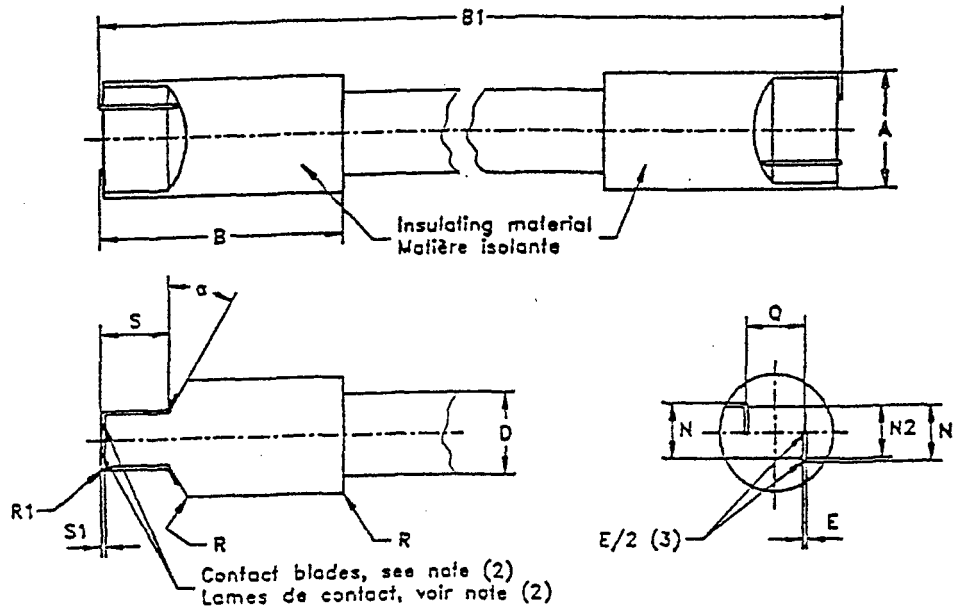

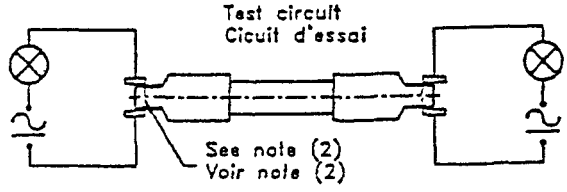

Reference	Dimension	Tolerance	Limit after wear Limite après usage
A	8,2	+ 0,0 - 0,02	
B	17,5	+ 0,5 - 0,0	
B1	217,3 (1)	+ 0,0 - 0,05	217,23
D	7,0	+ 0,2 - 0,2	
E	0,5	+ 0,0 - 0,02	
N	4,3	+ 0,0 - 0,02	4,26
N2	4,0	+ 0,02 - 0,02	
Q	4,2	+ 0,01 - 0,01	
R	0,5	+ 0,1 - 0,1	
R1	0,8	+ 0,1 - 0,1	
S	4,8	+ 0,0 - 0,02	
S1	0,15	+ 0,0 - 0,02	0,11
α	45°	+ 1° - 1°	

PURPOSE: To check contact-making in a combined pair of flexible or inflexible lampholders W4.3x8.5d.

TESTING: The combined pair of lampholders W4.3x8.5d shall be assumed to be correct if both indicator lamps light up when the gauge is inserted to simulate all possible operating positions of the lamp.

NOTE - Testing shall be carried out with the lampholders mounted at maximum distance according to the lampholder manufacturer's instructions.

(1) This value is equal to dimension Bmin of a 6 W lamp (see IEC 81). When testing a combined pair of lampholders mounted in a luminaire, the value of dimension B1 shall be equal to dimension Bmin of the related lamp, with a tolerance of - 0,05 mm.
(2) The two contact blades on each side of the gauge are electrically connected. Because of the wear they have to be replaceable*.
(3) Radius of the contact area.

* Material: hardened steel.
Hardness (after tempering): Rockwell cone 55 min.
Surface finish: 0,4 μm.

Copyright National Electrical Manufacturers Association
Provided by IHS under license with NEMA
No reproduction or networking permitted without license from IHS
Not for Resale

GAUGE FOR TESTING CONTACT-MAKING IN A COMBINED PAIR OF LAMPHOLDERS
CALIBRE POUR LA VERIFICATION DE LA REALITE DE CONTACT DANS UN ENSEMBLE DE DEUX DOUILLES
W4.3x8.5d

Dimensions in millimetres - Dimensions en millimètres

BUT: Vérification de la réalité du contact dans un ensemble de deux douilles W4.3x8.5d, flexibles ou rigides.

ESSAI: L'ensemble de deux douilles W4.3x8.5d est présumé correct si les deux lampes indicatrices s'allument lorsqu'on introduit le calibre pour simuler toutes les positions de fonctionnement possibles de la lampe.

NOTE - L'essai doit être effectué les douilles étant montées à la distance maximale, conformément aux instructions du fabricant de douilles.

(1) Cette valeur est égale à la dimension Bmin d'une lampe de 6 W (voir la CEI 81). Lorsqu'un ensemble de deux douilles montées sur un luminaire est vérifié, la valeur de la dimension B1 doit être égale à la dimension Bmin de la lampe correspondante, avec une tolérance de - 0,05 mm.
(2) Les deux lames de contact situées de chaque côté du calibre sont reliées électriquement. Afin de tenir compte de l'usure elles doivent être remplaçables*.
(3) Rayon de la zone de contact.

* *Matériau: acier trempé.*
Dureté (après la trempe): Cône Rockwell 55 min.
Finition: 0,4 μm.

Copyright National Electrical Manufacturers Association
Provided by IHS under license with NEMA
No reproduction or networking permitted without license from IHS
Not for Resale

"Go" Gauges for Fluorescent Lamp Starter Holders

The drawing is intended only to illustrate the essential dimensions of the gauge.

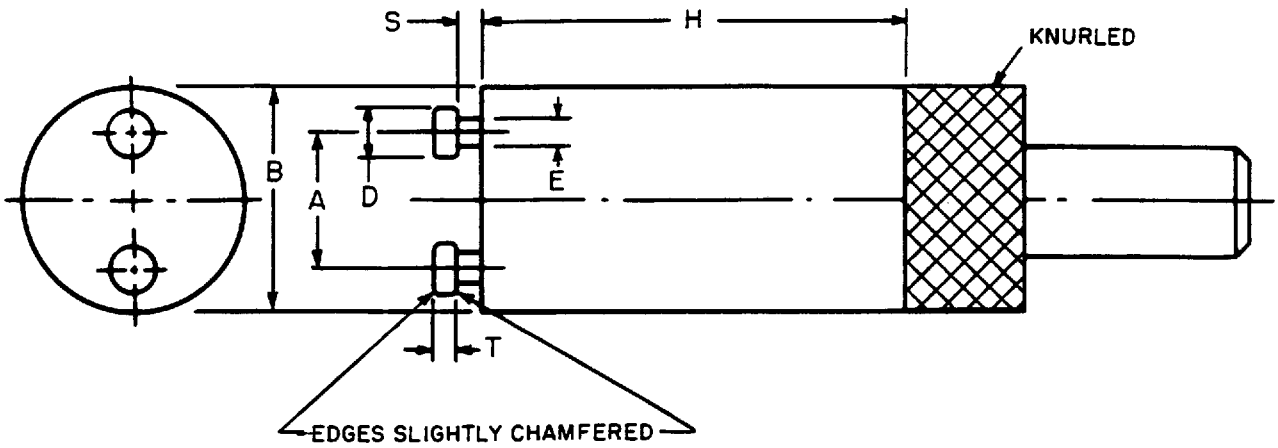

Reference	Standard dimensions in		Tolerance	Nearest metric equivalent mm	
	Gauge "A"	Gauge "B"		Gauge "A"	Gauge "B"
A	0.506	0.494	±0.0002	12.85	12.55
B	0.847	0.847	+0.0004	21.5	21.5
D	0.197	0.197	+0.0004	5.0	5.0
E	0.126	0.126	+0.0004	3.2	3.2
H	1.5	1.5	approx	38.0	38.0
S	0.067	0.067	–0.0004	1.7	1.7
T	0.087	0.087	–0.0004	2.2	2.2

Purpose
To check starter holders with regard to the fit of a maximum starter.

For details of starter holders, see ANSI C81.62, Standard Sheet 2-900.

Testing
Insert both "A" and "B" gauges into a starter holder and check for smoothness and seating.

Copyright National Electrical Manufacturers Association
Provided by IHS under license with NEMA
No reproduction or networking permitted without license from IHS
Not for Resale

Contact-Making and Retention Force Gauge for Fluorescent Lamp Starter Holders

The drawing is intended only to illustrate the essential dimensions of the gauge.

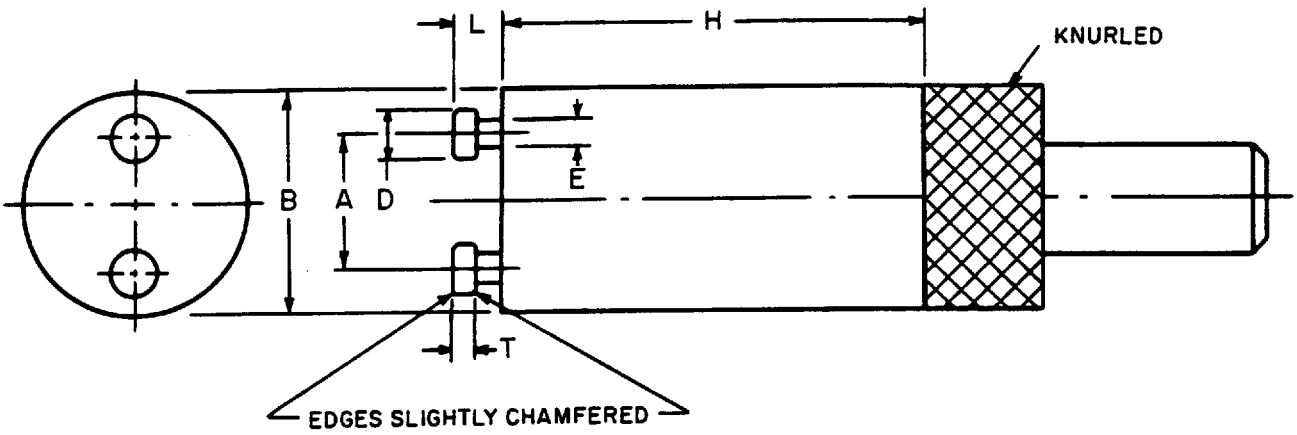

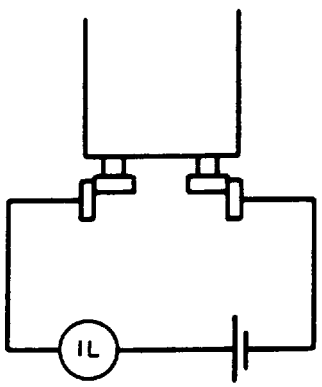

TEST CIRCUIT

Copyright National Electrical Manufacturers Association
Provided by IHS under license with NEMA
No reproduction or networking permitted without license from IHS
Not for Resale

ANSI C81.63-1991
Std Sheet 3-901-1

Reference	Dimension in	Tolerance in	Nearest metric equivalent mm
A	0.500	±0.0002	12.7
B	0.788	+0.004	20.0
D	0.177	–0.0004	4.5
E	0.102	–0.0004	2.6
H	1.5	approx	38.0
L	0.169	+0.0004	4.3
T	0.075	–0.0004	1.9

Purpose

To check the retention and contact-making of a minimum starter in a starter holder; the contact force being determined inter alia by the starter-pin spacing.

For details of starter holders, see ANSI C81.62, Standard Sheet 2-900.

Testing

Insert into a starter holder. Check for test circuit lamp lighting.

Copyright National Electrical Manufacturers Association
Provided by IHS under license with NEMA
No reproduction or networking permitted without license from IHS
Not for Resale

ANNEX A
(informative)
Former sheet numbers of C81.63 standards

GAUGES

Designation	Common Name	Standard Sheet Number	Former Standard Sheet Number	Former ANSI Standard
BA9	"Go" Gauge for Miniature Bayonet-Based Lamps	3-10-1	3-1	C81.30-1976
BA9	"Not-Go" Gauge for Miniature-Bayonet-Based Lamps	3-11-1	3-2	C81.30-1976
BA9	"Go" and "Not-Go" Plug Gauges for Miniature-Bayonet Lampholders	3-14-1	3-2	C81.30-1976
BA15	"Go" Gauge for Candelabra-Bayonet-Based Lamps	3-20-1	3-11	C81.30-1976
BA15	"Not-Go" Gauge for Candelabra-Bayonet-Based Lamps	3-21-1	3-12	C81.30-1976
BA15	"Go" and "Not-Go" Plug Gauges for Candelabra-Bayonet Lampholders	3-24-1	3-16	C81.30-1976
BY22d	"Not-Go" Gauge for GY22d Bases on Finished Lamps	3-30-1	New	—
BY22d	"Go" Gauge for BY22d Bases on Finished Lamps	3-31-1	New	—
BY22d	Gauge for Testing the Insertion of BY22d Bases in Lampholders	3-32-1	New	—
BY22d	Plug Gauge for BY22d Lampholders	3-33-1	New	—
BY22d	Gauge for Checking Contact Position and Contact Force in BY22d Lampholders	3-34-1	New	—
BY22d	Gauge for Checking Slot Width of BY22d Lampholders	3-35-1	New	—
BY22d	Supplementary "Go" Gauge for BY22d Lampholders	3-36-1	New	—
E5	Threaded "Go" Gauge for Midget-Screw-Based Lamps	3-100-1	3-1	C81.10d-1986
E5	"Not-Go" Gauge for Midget-Screw-Based Lamps	3-101-1	3-2	C81.10a-1979
E5	Threaded "Go" Gauge for Midget-Screw Lampholders	3-104-1	3-6	C81.10a-1979
E5	"Not-Go" Plug Gauge for Midget-Screw Lampholders	3-105-1	3-7	C81.10a-1979
E10	"Not-Go" Ring Gauge for Miniature-Screw-Based Lamps and Unmounted Bases	3-111-1	3-13	C81.10d-1986
E10	Threaded Gauge for Testing Contact-Making of Miniature-Screw-Based Lamps	3-112-1	3-11	C81.10d-1986
E10	Threaded "Go" Gauge for Miniature-Screw Lampholders	3-115-1	3-16	C81.10-1976
E10	"Not-Go" Plug Gauge for Miniature Screw Lampholders	3-116-1	3-17	C81.10-1976
E10	Threaded Gauge for Testing Contact-Making of Miniature-Screw Lampholders	3-117-1	3-15	C81.10-1976
E11	Seating "Go" Gauge for Mini-Can-Screw-Based Lamps	3-123-1	3-21	C81.10d-1986
E11	Threaded Gauge for Testing Contact-Making of Mini-Can-Screw Lampholders	3-125-1	3-23	C81.10a-1979
E12	Threaded "Go" Gauge for Candelabra-Screw-Based Lamps	3-130-1	3-32	C81.10d-1986
E12	"Go" Ring Gauge for Candelabra-Screw-Based Lamps	3-131-x*	—	—
E12	"Not-Go" Ring Gauge for Candelabra-Screw-Based Lamps	3-132-1	3-33	C81.10b-1983
E12	Gauge for Testing Contact-Making of Candelabra-Screw-Based Lamps	3-133-1	3-31	C81.10c-1983

Copyright National Electrical Manufacturers Association
Provided by IHS under license with NEMA
No reproduction or networking permitted without license from IHS
Not for Resale

ANSI C81.63g-1996
Supplement to ANSI C81.63-1991

Designation	Common Name	Standard Sheet Number	Former Standard Sheet Number	Former ANSI Standard
E12	Threaded "Go" Gauge for Candelabra-Screw Lampholders	3-136-1	3-36	C81.10c-1983
E12	"Not-Go" Plug Gauge for Candelabra-Screw Lampholders	3-137-1	3-37	C81.10c-1983
E12	Threaded Gauge for Testing Contact-Making of Candelabra-Screw Lampholders	3-138-1	3-35	C81.10c-1983
E17	Threaded "Go" Gauge for Intermediate-Screw-Based Lamps	3-144-1	3-52	C81.10d-1986
E17	"Not-Go" Ring Gauge for Intermediate-Screw-Based Laps C81.10b-1983	3-145-1	3-53	
E17	Gauge for Testing Contact-Making of Intermediate-Screw-Based Lamps	3-146-1	3-51	C81.10-1976
E17	Threaded "Go" Gauge for Intermediate-Screw Lampholders	3-149-1	3-56	C81.10-1976
E17	"Not-Go" Plug Gauge for Intermediate-Screw Lampholders	3-150-1	3-57	C81.10-1976
E17	Threaded Gauge for Testing Contact-Making of Intermediate Screw-Lampholders	3-151-1	3-55	C81.10-1976
E26/E26d	Threaded "Go" Gauge for Medium-Screw-Based Lamps	3-156-1	3-62	C81.10d-1986
E26	—	3-157-x*	New	—
E26/E26d	"Not-Go" Ring Gauge for Lamps Having Bases with E26 Threads	3-158-1	3-63	C81.10b-1983
E26/E26d	Threaded "Go" Gauge for Unmounted, Nonskirted Medium-Screw Bases	3-159-1	3-64	C81.10d-1986
E26/50x39	Threaded "Go" Gauges for Unmounted Skirted Medium-Screw Bases and Medium-Screw-Based Lamps	3-160-1	3-68	C81.10d-1986
E26d	Gauge with Reference Diameter of 0.520 Inch for Unmounted and Mounted Double-Contact Medium-Screw Bases	3-163-1	3-65	C81.10-1976
E26d	Gauge with Reference Diameter of 0.410 Inch for Double-Contact Medium-Screw-Based Lamps	3-164-1	3-66	C81.10-1976
E26/E26d	Gauge for Testing Contact-Making of Nonskirted Medium-Screw-Based Lamps	3-165-1	3-61	C81.10-1976
E26/50x39	Gauge for Testing Contact-Making of Skirted Medium-Screw Based Lamps	3-166-1	3-67	C81.10a-1979
E26	Threaded "Go" Gauge for Single-Contact Medium-Screw Lampholders	3-169-1	3-74	C81.10-1976
E26	"Not-Go" Plug Gauge for Medium-Screw Lampholders	3-170-1	3-76	C81.10-1976
E26	Threaded Gauge for Testing Contact-Making of Single-Contact Medium-Screw Lampholders	3-171-1	3-71	C81.10c-1983
E26d	Threaded "Go" Gauge for Double-Contact Medium-Screw Lampholders	3-174-1	3-75	C81.10c-1983
E26d	Gauge for Checking Radial Position of Intermediate Contact of Double-Contact Medium-Screw Lampholders	3-175-1	3-77	C81.10-1976
E26d	Threaded Contact-Making Gauges for Testing the Relative Positions of the Contacts in Double-Contact Medium-Screw Lampholder	3-176-1	3-78	C81.10c-1983

Copyright National Electrical Manufacturers Association
Provided by IHS under license with NEMA
No reproduction or networking permitted without license from IHS
Not for Resale

Designation	Common Name	Standard Sheet Number	Former Standard Sheet Number	Former ANSI Standard
E26d	Threaded Gauge for Testing Contact-Making of Metal-Shell Paper-Lined Double-Contact Medium-Screw Lampholder	3-177-1	3-72	C81.10-1976
E26d	Gauge for Testing Contact-Making of Porcelain or Molded Double-Contact Medium-Screw Lampholders	3-178-1	3-73	C81.10-1976
E26d	Threaded Gauge for Testing Unacceptable Contact-Making in Double-Contact Medium-Screw Lampholders	3-179-1	3-79	—
E39/E39d	Gauge for Testing Contact-Making of Mogul-Screw-Based Lamps	7006-24A-1	3-187-2	C81.63a-1993
E39/E39d	Threaded "Go" Gauge for Mogul-Screw Based Lamps	7006-24B-1	3-185-2	C81.63a-1993
E39/E39d	"Not-Go" Ring Gauge for Mogul-Screw-Based Lamps and Unmounted Bases	7006-24C-1	3-186-2	C81.63a-1993
E39	Threaded Gauge for Testing Contact-Making of Mogul-Screw Lampholders	7006-24D-1	3-192-2	C81.63a-1993
E39	Threaded "Go" Gauge for Mogul-Screw Lampholders	7006-24E-1	3-190-2	C81.63a-1993
E39	Threaded Maximum Torsion Test Device for Mogul-Screw Lampholders with Shell Grip Feature	7006-24F-1	3-195-2	C81.63a-1993
E39	Threaded Minimum Torsion Test Device for Mogul-Screw Lampholders with Shell Grip Feature	7006-24G-1	3-196-2	C81.63a-1993
E39	"Not-Go" Plug Gauge for Mogul-Screw Lampholders	3-191-2	3-191-1	C81.63a-1993
EP39	Threaded "Go" Gauge for Position-Oriented Mogul-Screw-Based Lamps	3-202-1	3-94	C81.10d-1986
EP39	Gauge for Testing Contact-Making of Position-Oriented Mogul-Screw-Based Lamps	3-203-1	3-93	C81.10b-1983
EP39	Threaded Gauge for Testing Minimum Insertion Clearance of Position-Oriented Mogul-Screw Lampholders	3-204-1	3-97	C81.10b-1983
EP39	Threaded Gauge for Testing Contact-Making of Position-Oriented Mogul-Screw Lampholders	3-205-1	3-96	C81.10b-1983
Fa8	"Go" Gauge for Single-Pin Bases on Finished Lamps	3-250-1	3-1	C81.20-1976
Fa8	"Not-Go" Gauge for Single-Pin Bases on Finished Lamps	3-251-1	3-2	C81.20-1976
Fa8	"Go" and Contact-Making Gauge for Single-Pin Lampholders	3-254-1	3-6	C81.20-1976
G3.9	"Go" Gauge for G3.9-Based Lamps	3-300-1	3-71	C81.40b-1983
G3.9	Double-Ended "Go" Gauge for Connectors	3-303-1	3-73	C81.40b-1983
G3.9	Minimum Retention Force Gauge for Contacts of Connector	3-304-1	3-74	C81.40b-1983
GU4	"Go" and "Not Go" Gauge for GU4 Bases	7006-108-1	New	—
GU4	"Gauges for Checking Maximum Insertion and Withdrawal Force in Lampholders	7006-108A-1	New	—
GU4	Gauges for Checking Minimum Lampholder Retention Force	7006-108B-1	New	—
GU4	"Go" Gauge for GU4 Lampholders	7006-108C-1	New	—
GU4	Single Pin Lampholder Contact Making	7006-108D-1	New	—
G5	"Go" and "Not-Go" Gauge for Miniature-Bipin Bases on Finished Lamps	3-310-1	3-11	C81.20-1976
G5	"Go" Gauges for Miniature-Bipin Lampholders	3-313-1	3-16	C81.20-1976
G5	Torsion Test Device for Miniature-Bipin Lampholders	3-314-1	3-19	C81.20-1976

Copyright National Electrical Manufacturers Association
Provided by IHS under license with NEMA
No reproduction or networking permitted without license from IHS
Not for Resale

ANSI C81.63g-1996
Supplement to ANSI C81.63-1991

Designation	Common Name	Standard Sheet Number	Former Standard Sheet Number	Former ANSI Standard
G5	Double-Ended Gauge, Maximum-Length Lamp and Minimum Lampholder Spacing, for Miniature-Bipin Lampholders	3-317-1	3-17	C81.20-1976
G5	Double-Ended Gauge, Minimum-Length Lamp and Maximum Lampholder Spacing, for Miniature-Bipin Lampholders	3-318-1	3-18	C81.20-1976
G5.3	Gauge for G5.3-Based Lamps	3-320-1	3-1	C81.40-1976
GX5.3	"Go" Gauge for GX5.3-Based Lamps	3-321-1	3-3	C81.40d-1985
GY5.3	"Go" Gauge for GY5.3-Based Lamps	3-322-1	3-4	C81.40d-1985
GX5.3/GY5.3	"Not-Go" Gauges for GX5.3- and GY5.3-Based Lamps	3-323-1	3-5	C81.40d-1985
G5.3	"Go" Gauge for Lampholders	3-326-1	3-6	C81.40-1976
GU5.3	"Go" and "Not Go" Gauge for GU5.3 Bases	7006-109-1	New	—
GU5.3	Gauges for Checking Maximum Insertion and Withdrawal Force in Lampholders	7006-109A-1	New	—
GU5.3	Gauges for Checking Minimum Lampholder Retention Force in Lampholders	7006-109B-1	New	—
GU5.3	"Go" Gauge for GU5.3 Lampholders	7006-109C-1	New	—
GX5.3	"Go" Gauge for Lampholders	3-327-1	3-7	C81.40d-1986
GY5.3	"Go" Gauge for Lampholders and Connectors	3-328-1	3-8	C81.40d-1986
GX5.3	Dual-Pin Retention Gauges for Lampholders and Connectors	3-331-1	3-9	C81.40d-1986
GY5.3	Dual-Pin Retention Gauges for Lampholders and Connectors	3-332-1	3-13	C81.40d-1986
GX5.3	Single-Pin Retention Gauge for Lampholders and Connectors	3-333-1	3-10	C81.40d-1986
GY5.3	Single-Pin Retention Gauge for Lampholders and Connectors	3-334-1	3-14	C81.40d-1986
G6.35/GY6.35	"Go" Gauges for G6.35- and GY6.35-Based Lamps	3-340-1	3-11	C81.40-1976
G6.35/GY6.35	"Go" and "Not-Go" Gauge for Base Pin Diameter	3-341-2	3-341-1	C81.63-1991
GZ6.35	"Go" Gauge for Bipin Lamp Base	3-342-2	3-342-2	C81.63a-1993
G6.35 /GY6.35	"Go" Gauge for Lampholders	3-345-1	3-15	C81.40b-1983
GZ6.35	"Go" Gauge for Connector	3-346-1	New	—
G6.35/GY6.35	Minimum Retention Force Gauge for Contacts and Lampholders	3-349-1	3-16	C81.40b-1983
GZ6.35	Minimum Contact Retention Force Gauge of Connectors	3-350-x*	New	—
2G7/2GX7	"Go" and "Not Go" for Cap on Finished Lamps	7006-102-1	New	—
2G7	Gauge "A" Maximum Insertion and Withdrawal Force in Lampholders	7006-102A-1	New	—
2G7/2GX7	Gauge "B" Maximum Insertion Force in Lampholders	7006-102B-1	New	—
2G7	Gauge "C" Minimum Retention Force in Lampholders	7006-102C-1	New	—
2GX7	Gauge "A" Maximum Insertion and Withdrawal Force in Lampholders	7006-103-1	New	—
2GX7	Gauge "C" Minimum Retention Force in Lampholders	7006-103A-1	New	—
2G7, 2GX7, 2G11, G23, GX23, G24, GY24, G32, GX32, GY32	Gauge "D" Maximum Withdrawal Force Max. Pin	7006-69D-1	New	—

Copyright National Electrical Manufacturers Association
Provided by IHS under license with NEMA
No reproduction or networking permitted without license from IHS
Not for Resale

Designation	Common Name	Standard Sheet Number	Former Standard Sheet Number	Former ANSI Standard
2G7, 2GX7, 2G11, G23, GX23, G24, GY24, G32, GX32, GY32	Gauge "E" Minimum Retention Force Min. Pin	7006-69E-1	New	—
G7.9/GX7.9	"Go" Gauges for G7.9- and GX7.9-Based Lamps	3-356-1	3-21	C81.40c-1983
G7.9/GX7.9	"Go" Gauges for Lampholders	3-359-1	3-26	C81.40d-1986
G7.9/GX7.9	Minimum Contact Retention Force Gauge for G7.9 and GX7.9 Lampholders	3-362-1	3-28	C81.40c-1983
G9.5	"Go" Gauge for G9.5-Based Lamps	3-368-1	3-31	C81.40c-1983
GY9.5/GZ9.5	"Go" Gauges for GY9.5- and GXZ9.5-Based Lamps	3-369-1	3-41	C81.40d-1986
G9.5	"Go" Gauge for Lampholders	3-372-1	3-36	C81.40c-1983
GY9.5/GZ9.5	"Go" Gauges for Lampholders	3-373-1	3-46	C81.40d-1986
GY9.5/GZ9.5	"Not-Go" Gauge for Lampholders	3-374-1	3-47	C81.40-1976
G9.5	Minimum Contact Retention Force Gauge for Lampholders	3-377-1	3-37	C81.40c-1983
G10q	"Go" Gauge for Four-Pin Circular Fluorescent Lamp Bases on Finished Lamps	3-383-1	3-41	C81.20b-1985
G10q	Contact Spacing Gauges for Four-Pin Lampholders for Circular Fluorescent Lamps	3-386-1	3-46	C81.20b-1985
G10q	Contact Depth Gauge for Four-Pin Lampholders for Circular Fluorescent Lamps	3-387-1	3-47	C81.20b-1985
2G11	"Go" Gauge for Bases	7006-82-1	3-393-2	C81.63a-1993
2G11	Gauge "A" for Maximum Insertion and Withdrawal Force for Lampholders	7006-82A-1	3-396-2	C81.63a-1993
2G11	Gauge "B" for Maximum Insertion Force for Lampholders	7006-82B-1	3-397-2	C81.63a-1993
2G11	Gauge "C" for Minimum Retention Force for Lampholders	7006-82C-1	3-398-2	C81.63a-1993
G12	"Go" and "Not Go" Caps on Finished Lamps	7006-80-1	New	—
G12	Gauge "A" Maximum Insertion and Withdrawal Force in Lampholders Maximum Pin Dimensions	7006-80A-1	New	—
G12	Gauge "B" Maximum Insertion and Withdrawal Force in Lampholders Minimum Pin Dimensions	7006-80B-1	New	—
G12	Gauge "C" Minimum Lampholder Retention Force	7006-80C-1	New	—
G12, PG12,	Gauge "D" Max. Withdrawal Force GX12 Maximum Cap Pin	7006-80D-1	New	—
G13	"Go" and "Not-Go" Gauge for Medium Bipin Bases on Finished Lamps	3-406-1	3-21	C81.20c-1987
G13	"Go" and "Not-Go" Gauge for Unmounted Medium Bipin Bases	3-407-1	3-22	C81.20c-1987
G13	Pin Torsion Test Device for Medium Bipin Bases	3-410-1	3-25	C81.20c-1987
G13	Torsion Test Device for Medium Bipin Lampholders	3-414-1	3-29	C81.20-1976
G13	Double-Ended "Go" Gauges for a Combined Pair of Medium Bipin Lampholders	3-417-2	3-417-1	C81.63-1991
G13	Double-Ended Gauges for Testing Contact-Making for a Combined Pair of Medium Bipin Lampholders Mounted at Maximum Spacing	3-418-1	3-28	C81.20c-1987
2G13	"Go" Gauges for Bases	3-420-1	New	—
2G13	"Go" Gauges for Testing Insertion and Contact Making for Lampholders	3-423-1	New	—
2G13	Gauge for Testing Contact-Making for Lampholders	3-424-1	New	—

Copyright National Electrical Manufacturers Association
Provided by IHS under license with NEMA
No reproduction or networking permitted without license from IHS
Not for Resale

ANSI C81.63g-1996
Supplement to ANSI C81.63-1991

Designation	Common Name	Standard Sheet Number	Former Standard Sheet Number	Former ANSI Standard
GX16d	"Go" Gauge for Mogul and Extended Mogul End-Prong Bases	3-430-1	New	—
GX16d	"Go" Gauge for Mogul End-Prong Connectors	3-433-1	New	—
G17	"Go" Gauge for G17t- and G17q-Based Lamps (Pin Arrangement No. 1)	3-439-1	3-41	C81.30-1976
GX17q	"Go" Gauge for GX17q-Based Lamps (Pin Arrangement No. 2)	3-440-1	3-42	C81.30-1976
G17q	"Go" Gauge for Lampholders (Pin Arrangement No. 1)	3-443-1	3-46	C81.30-1976
GX17q	"Go" Gauge for Four-Pin Prefocus Lampholders (Pin Arrangement No. 2)	3-444-1	3-47	C81.30-1976
G17/GX17	Two-Pin Contact-Making Gauge for Four-Pin Prefocus Lampholders	3-445-1	3-48	C81.30-1976
G17/GX17	Rotation gauge for Four-Pin Prefocus Lampholders	3-446-1	3-49	C81.30-1976
G20	"Go" Gauge for Mogul Bipin Bases on Finished Lamps	3-452-1	3-31	C81.20-1976
G20	"Go" Gauges for Mogul Bipin Lampholders	3-455-1	3-36	C81.20-1976
G20	Torsion Test Device for Mogul Bipin Lampholders	3-456-1	3-39	C81.20-1976
G20	Double-Ended Gauge, Maximum Length Lamp and Minimum Lampholder Spacing, for Mogul Bipin Lampholders	3-459-1	3-37	C81.20-1976
G20	Double-Ended Gauge, Minimum Length Lamp and Maximum Lampholder Spacing, for Mogul Bipin Lampholders	3-460-1	3-38	C81.20-1976
G22	"Go" and "Not-Go" Gauge for Medium-Bipost-Based Lamps	3-466-1	3-51	C81.40a-1979
G22	"Go" Gauge for Medium Bipost Lampholders	3-469-1	3-56	C81.40a-1979
G23	"Go" and "Not-Go" Gauge for Bases on Finished Lamp	7006-69-1	3-475-1	C81.63-1991
GX23	"Go" and "Not-Go" Gauge for Bases on Finished Lamp	7006-86-1	3-476-1	C81.63-1991
G23	Gauge "A" for Checking Maximum Insertion Force and Maximum Withdrawal Force in Lampholders	7006-69A-1	3-479-1	C81.63-1991
GX23	Gauge "A" for Checking Maximum Insertion Force and Maximum Withdrawal Force in Lampholders	7006-86A-1	3-480-1	C81.63-1991
G23/GX23	Gauge "B" for Checking Maximum Insertion Force and Maximum Withdrawal Force in Lampholders	7006-69B-1	3-481-1	C81.63-1991
G23	Gauge "C" for Checking Minimum Retention Force in Lampholders	7006-69C-1	3-482-1	C81.63-1991
GX23	Gauge "C" for Checking Minimum Retention Force in Lampholders	7006-86B-1	3-483-1	C81.63-1991
G24/GY24	"Go" and "Not-Go" Gauges for Bases on Finished Lamps	7006-78-1	3-493-1	C81.63-1991
G24/GY24	Plug Gauges "A" for Checking Maximum Insertion and Withdrawal Forces in Lampholders	7006-78A-1	3-494-1	C81.63-1991
G24/GY24	Plug Gauges "B" for Checking Maximum Insertion Force in Lampholders	7006-78B-1	3-495-1	C81.63-1991
G24/GY24	Plug Gauges "C" for Checking Minimum Retention Force in Lampholders	7006-78C-1	3-496-1	C81.63-1991
G24/GY24	Plug Gauge "F" for Checking Noninter-changeability of Bases in Lampholders	7006-78F-1	3-497-1	C81.63-1991

Copyright National Electrical Manufacturers Association
Provided by IHS under license with NEMA
No reproduction or networking permitted without license from IHS
Not for Resale

Designation	Common Name	Standard Sheet Number	Former Standard Sheet Number	Former ANSI Standard
G24/GY24	"Go" Gauges "G" for Checking Key Slots in Lampholders	7006-78G-1	3-498-1	C81.63-1991
G32/GX32/GY32	"Go" and "Not Go" Gauges for Bases on Finished Lamp	7006-87-2	3-506-1	C81.63a-1993
G32/GY32 GX/GY32	Plug Gauge "A1" for Checking Maximum Insertion and Withdrawal Forces in Lampholders	7006-87A-1	3-507-1	C81.63a-1993
GX32	Plug Gauge "A2" for Checking Maximum Insertion and Withdrawal Forces in GX32 Lampholder	7006-	3-508-1	C81.63a-1993
G32/GX32/GY32	Plug Gauges "B" for Checking Maximum Insertion Force in Lampholders	7006-87B-1	3-509-1	C81.63a-1993
G32/GX32/GY32	Plug Gauges "C" for Checking Maximum Insertion Force in Lampholders	7006-87C-1	3-510-1	C81.63a-1993
G32/GX32/GY32	Gauge "F" Non Interchangeability of Caps	7006-87D-2	New	—
G32/GX32/GY32	Gauge "G" Lampholder Key Slots	7006-87E-2	New	—
G38	"Go" Gauge for Mogul Bipost-Based Lamps	3-519-1	3-61	C81.40a-1979
G38	"Go" and "Not-Go" Gauge for Posts of Mogul Bipost-Based Lamps	3-520-1	3-62	C81.40-1976
G38	"Go" Gauge for Mogul Bipost Lampholders	3-523-1	3-66	C81.40-1976
PG12/PGX12	"Go" and "Not Go" Caps on Finished Lamps	7006-81-2	New	—
PG12/PGX12	Gauge "A" Maximum Insertion and Withdrawal Force in Lampholders Maximum Pin Spacing	7006-81A-2	New	—
PG12/PGX12	Gauge "B" Maximum Insertion Force in Lampholders Maximum Pin Dimensions and Spacing	7006-81B-2	New	—
PG12/PGX12	Gauge "C" Minimum Lampholder Retention	7006-81C-2	New	—
PG12/PGX12	Gauge "F" Contact Making Maximum Pin Spacing	7006-81F-2	New	—
PG12/PGX12	Gauge "F" Contact Making Minimum Pin Spacing	7006-81G-2	New	—
P28	"Go" Gauge for Medium Prefocus Based Lamps	3-700-x*	New	—
P28	"Go" Gauge for Medium Prefocus Lampholders	3-703-x*	New	—
P30	"Go" and "Not-Go" Gauge for Diameter of Collar on Prefocus Bases on Finished Lamps	3-709-1	3-18	C81.30a-1983
P40	"Go" Gauge for Mogul Prefocus Based Lamps and for Unmounted Bases	3-715-1	3-31	C81.30a-1983
P40	"Go" Gauge for Mogul Prefocus Lampholders	3-718-1	3-36	C81.30a-1983
R7s	"Go" Gauge for Recessed Single-Contact Lampholders at Minimum Spacing	3-770-1	3-6	C81.50-1976
R7s	"Go" and "Not-Go" Gauge for Recessed Double-Contact Bases on Finished Lamps	3-771-x*	New	—
R17d	"Go" and "Not-Go" Gauge for Recessed Double-Contact Bases on Finished Lamps	3-777-1	3-51	C81.20-1976
R17d	"Go" Gauge for Recessed Double-Contact Lampholders	3-780-1	3-56	C81.20a-1984
R17d	Contact-Making Gauge for Recessed Double-Contact Lampholders	3-781-1	3-57	C81.20a-1984
R17d	Double-Ended "Go" Gauge, Maximum Length Lamp and Minimum Lampholder Spacing, for Recessed Double-Contact Lampholders	3-784-1	3-58	C81.20-1976
R17d	Double-Ended "Go" Gauge, Minimum-Length Lamp and Maximum Lampholder Spacing, for Recessed Double-Contact Lampholders	3-785-1	3-59	C81.20-1976

Copyright National Electrical Manufacturers Association
Provided by IHS under license with NEMA
No reproduction or networking permitted without license from IHS
Not for Resale

ANSI C81.63g-1996
Supplement to ANSI C81.63-1991

Designation	Common Name	Standard Sheet Number	Former Standard Sheet Number	Former ANSI Standard
SX4	"Go" Ring Gauge for Submidget-Flanged-Based Lamps	3-850-1	3-2	C81.50b-1983
SX4	"Not-Go" Ring Gauge for Submidget-Flanged-Based Lamps	3-851-1	3-3	C81.50b-1983
Starter Holders	"Go" Gauges for Fluorescent Lamp Holders Starter Holders	3-900-1	3-76	C81.20-1976
Starter	Contact-Making and Retention Force Gauge for Fluorescent Lamp Starter Holders	3-901-1	3-77	C81.20-1976

* No standard sheet has been issued for this item. The sheet number is held in reserve.

Copyright National Electrical Manufacturers Association
Provided by IHS under license with NEMA
No reproduction or networking permitted without license from IHS
Not for Resale

ANNEX B
(informative)
Contrast of projections methods on engineering drawings

I. European Method: First angle projection

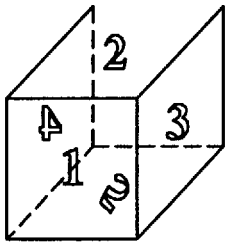

Product

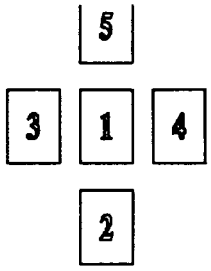

Drawing projections

II. American Method: Third angle projection

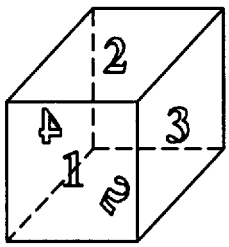

Same Product

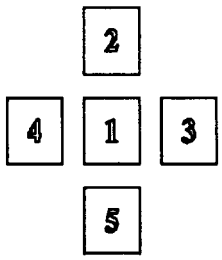

Drawing projections

Copyright National Electrical Manufacturers Association
Provided by IHS under license with NEMA
No reproduction or networking permitted without license from IHS
Not for Resale

Copyright National Electrical Manufacturers Association
Provided by IHS under license with NEMA
No reproduction or networking permitted without license from IHS
Not for Resale