American National Standard

Approved: February 20, 2002 Secretariat: American National Standards Lighting Group - NEMA

For Electric Lamps

For Lampholders
Supplement-

INSTRUCTIONS:

Remove Standard Sheet 2-202-1 (3 pages) and insert sheet 20-202-1(3 pages)

Remove Standard Sheet 2-320-1 and insert sheet 7005-73-1 (1 page).

Remove any prior versions of the "Universal Contents" and insert version C81.62bb-2002.

Discard this instruction sheet when finished.

Information concerning the approval of this Supplement is based on the documents listed in the table below:

LB	RV
C81/2407 C81/2415	C81/2408 C81/2416

Copyright © 2002 by American National Standard Lighting Group - NEMA
Copyright National Electrical Manufacturers Association
Provided by IHS under license with NEMA
No reproduction or networking permitted without license from IHS
Not for Resale

This page
Intentionally
Left blank

Copyright © 2002 by American National Standard Lighting Group - NEMA

--`,,`-`-`,,`,,`,`,,`---

Copyright National Electrical Manufacturers Association
Provided by IHS under license with NEMA
No reproduction or networking permitted without license from IHS

Not for Resale

Universal Contents of C81.62 - Lampholders for Electric Lamps

System	Title	Standard Sheet No.	Published In
BA9	Miniature Bayonet Lampholder	2-10-3	C81.62z-98
BA/BAY/BAZ15	Candelabra Bayonet Lampholders	2-20-1	C81.62-91
BY22d	Lampholder	7005-17-5	C81.62v-00
Edison	Position of Holder Thread in Relation to Central Contact of the Edison Lampholder	7005-20-5	C81.62w-98
E5	Midget Screw Lampholder	2-100-1	C81.62-91
E10	Miniature Screw Lampholder	2-111-1	C81.62-91
E11	Mini-Can Screw Lampholder	2-123-2	C81.62f-96
E12	Candelabra Screw Lampholder	2-131-2	C81.62a-93
E17	Intermediate Screw Lampholder	7005-20-5	C81.62w-98
E26	Single-Contact Medium Screw Lampholder	2-157-1	C81.62-91
E26d	Double-Contact Medium Screw Lampholder	2-158-1	C81.62-91
E39	Lampholders	7005-24A-1	C81.62g-97
E39d	Double-Contact Mogul Screw Lampholder	2-187-1	C81.62c-95
EP39	Position-Oriented Mogul Screw Lampholder	2-202-2	C81.62bb-02
Fa8	Single-Pin Fluorescent Lampholder	2-250-1	C81.62-91
G3.9	Lampholder	2-300-1	C81.62-91
GU4	Lampholder	7005-108-2	C81.62w1-98
GZ4	Connector for Bi-Pin Lamp Bases	7005-67-1	C81.62x-00
G5	Miniature Bipin Lampholder	2-310-2	C81.62e-96
G5.3	Lampholder	7005-73-01	C81.62bb-02
GU5.3	Lampholder	7005-109-1	C81.62g-97
GX5.3	Lampholders and Connectors	2-321-2	C81.62n-97
GY5.3	Lampholders and Connectors	2-322-2	C81.62n-97
G/GY6.35	Lampholders	2-340-1	C81.62-91
GZ6.35	Connector	2-342-1	C81.62a-93
2G7	Lampholder	7005-102-1	C81.62g-97
2GX7	Lampholder	7005-103-1	C81.62g-97
GU7	Lampholder	7005-113-1	C81.62ss-99
G/GX7.9	Lampholders	2-356-1	C81.62-91
GR8	Lampholder	7005-68-3	C81.62w-98
G9.5	Lampholders	2-368-1	C81.62-91
GY/GZ9.5	Lampholders	2-369-1	C81.62-91
G10q	Four-Pin Lampholder for Circular Fluorescent Lamps	2-383-2	C81.62q-97
GR10q	Lampholder	7005-77-2	C81.62w-98
2G11	Lampholders	7005-82-2	C81.62g-97
G12	Lampholder	7005-63-1	C81.62g-97
G13	Medium Bipin Fluorescent Lampholder	2-406-1	C81.62-91
2G13	U-Shaped Fluorescent Lampholder	2-420-2	C81.62s-98
G16d	Mogul End-Prong Connector	2-430-2	C81.62n-97
G/GX17q	Four-Pin Prefocus Lampholders	2-440-1	C81.62-91

Copyright © by American National Standard Lighting Group – NEMA

Copyright National Electrical Manufacturers Association
Provided by IHS under license with NEMA
No reproduction or networking permitted without license from IHS
Not for Resale

Universal Contents of C81.62 - Lampholders for Electric Lamps

System	Title	Standard Sheet No.	Published In
G20	Mogul Bipin Fluorescent Lampholder	2-452-1	C81.62-91
G22	Medium Bipost lampholder	2-466-1	C81.62-91
G23	Lampholder	7005-69-1	C81.62g-97
GX23	Lampholder	7005-86-1	C81.62g-97
G/GX/GY24	Lampholders	7005-78-3	C81.62g-97
G/GX/GY32	Lampholders	7005-87-3	C81.62g-97
G38	Mogul Bipost Lampholder	2-519-1	C81.62-91
P8.25d	Lampholder	2-530-1	C81.62c-95
PG/PGX12	Lampholders	7005-64-3	C81.62ss-99
P12.4d	Lampholder	2-550-1	C81.62c-95
P28	Medium Prefocus Lampholder	2-700-1	C81.62-91
P30	Candelabra Prefocus Lampholders	2-709-1	C81.62-91
P32 & PK32	Lampholders	7005-111-1	C81.62x-00
P40	Mogul Prefocus Lampholder	2-715-1	C81.62-91
R7s	Recessed Single-Contact Lampholder	2-770-1	C81.62-91
R17d	Recessed Double-Contact Lampholder	2-777-2	C81.62r-98
SX4	Submidget Flanged Lampholder	2-850-1	C81.62-91
S14	Lampholder	7005-112-1	C81.62t-99
W2.5x16	Lampholder	7005-104-1	C81.62u-98
W4.3x8.5d	Lampholder	7005-115-1	C8162w-98
	Fluorescent Lamp Starter Holder	2-900-1	C81.62-91
	“Uno” Thread Form for Medium Screw Lampholders	4-2-1	C81.62m-98
	Electrolier Size Metal Shell for Medium Screw Lampholders	4-5-1	C81.62m-98
	Electrolier Size Metal Cap for Medium Screw Lampholders	4-6-1	C81.62m-98

Copyright © by American National Standard Lighting Group – NEMA

Copyright National Electrical Manufacturers Association
Provided by IHS under license with NEMA
No reproduction or networking permitted without license from IHS
Not for Resale

EP39 Position-Oriented Mogul Screw Lampholder

The designation assigned to this base in accordance with the coding system of the International Electrotechnical Commission (IEC) is EP39.

At the time of issuance of this standard, there was no comparable IEC standard in existence.

The drawing is intended only to indicate the dimensions to be controlled.

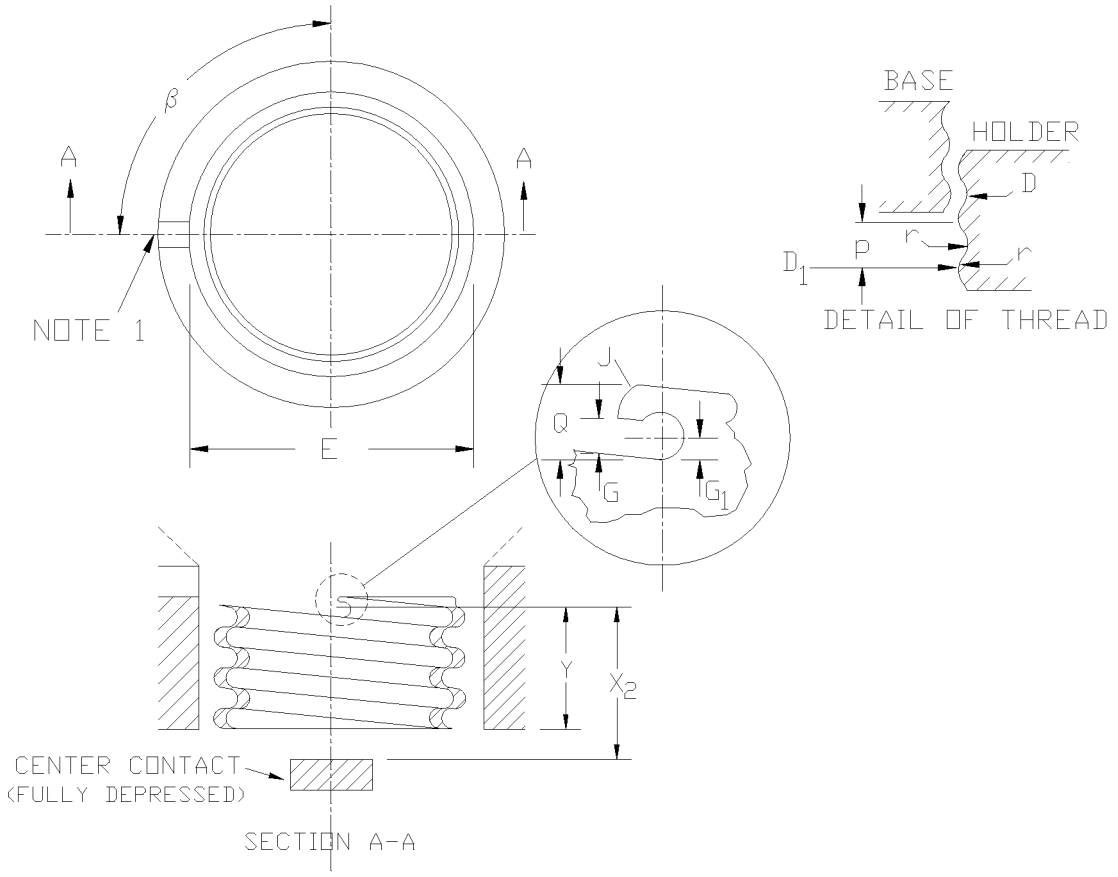

Copyright © 2002 by American National Standard Lighting Group – NEMA

Copyright National Electrical Manufacturers Association
Provided by IHS under license with NEMA
No reproduction or networking permitted without license from IHS
Not for Resale

Reference	Standard Dimensions in		Nearest Metric Equivalent mm	
	Min	Max	Min	Max
D (Note 2)	1.565	1.577	39.75	40.06
D_1	1.465	1.477	37.21	37.52
E	1.750	-	44.45	-
G_1 (Note 3)	0.060R	0.065R	1.52R	1.65R
J	0.016R	0.046R	0.41R	1.17R
Q	0.220	0.240	5.59	6.10
G	0.098	0.108	2.50	2.74
X_2 (Note 4)	1.060	-	26.92	-
Y (Note 5)	0.650	-	16.50	-
ß (degrees)	85°	95°	85°	95°

NOTES

1 The notch in the insulating body of the lampholder is provided to aid the proper orientation of an assembled lampholder in a luminaire. For horizontal lamp applications, this notch would be located at the low end of the vertical diameter.

2 Each lampholder shall have a stop for proper positioning of the lamp arc tube. Plane A-A indicates the beginning of the thread and the location of the cutout (stop) position at 90 degrees to the notch in the body of the lampholder. The thread cutout starts at the beginning of the thread and follows the thread for 360 degrees, thus removing one thread crest and one thread root.

3 The center for radius G_1 is located 0.015 inch (0.381mm) above the major thread diameter D_1, of the holder. Circumferentially, the center of this locking slot is located by the angle beta from the notch in the insulating body. See note 1.

4 The X_2 dimension is measured by the Minimum Insertion Gauge (see ANSI C81.63, Standard Sheet 3-204) and represents the distance from the centerline of the locking hole to the fully depressed center contact.

5 The Y dimension represents the distance from the centerline of the locking hole to the bottom of the thread.

6 The maximum torque used for lamp insertion shall be 25 lbf-in (2.8 Newton-meter).

7 The central contact shall make a good electrical connection when the lamp is fully inserted.

8 The base pin locking device shall provide a minimum unlocking torque of 10 lbf-in (1.1 Newton-meter) when a position-oriented mogul lamp base is fully inserted in the lampholder.

9 Insulation slope is controlled by the holder gauge.

Copyright © 2002 by American National Standard Lighting Group – NEMA

Copyright National Electrical Manufacturers Association
Provided by IHS under license with NEMA
No reproduction or networking permitted without license from IHS
Not for Resale

Form of EP39 Mogul Screw Threads

Threads per inch	4
Pitch of thread, *p*	0.250 in (6.350 mm)
Radius of thread, *r*	0.0906 in (2.301 mm)
Direction of threads	right hand

Gauging

Threaded "Go" Gauge 7006-24E: It shall be possible to screw this gauge into a lampholder smoothly. When the gauge is inserted as far as it will go, the threaded portion of the lampholder shall be coplanar with or project beyond surface y_1, but shall not project beyond surface y_2.

"Not-go" Plug Gauge 3-191: This gauge shall not enter the screw thread of a lampholder, by its own mass, so far that the thread protrudes beyond surface t.

Threaded Gauge for Testing Minimum Insertion Clearance, Gauge 3-204: It shall be possible to screw the gauge 3-204 into a lampholder until the pin engages the pin-lock stop of the holder.

Threaded Gauge for Testing Contact-making, Gauge 3-205: When gauge 3-205 is fully seated in a lampholder, the indicator lamp (IL) shall light. In this position there shall be a clearance between the gauge and the upper edge of the holder if the holder is made of ceramic or other material that may scratch a glass bulb. This clearance may be verified by the use of a feeler gauge 0.003 in (0.08mm) thick and 0.2 in (5.0mm) wide.

Base

See ANSI C81.61, Standard Sheet 1-202.

Copyright © 2002 by American National Standard Lighting Group – NEMA

Copyright National Electrical Manufacturers Association
Provided by IHS under license with NEMA
No reproduction or networking permitted without license from IHS
Not for Resale

LAMPHOLDERS
DOUILLES

G5.3

Dimensions in millimetres — Dimensions en millimètres

The drawing is only for the purpose of showing the most important dimensions.
Le dessin a pour seul but d'indiquer les dimensions les plus importantes.
For details of bi-pin cap G5.3, see sheet 7004-73 — Pour les détails du culot à deux broches G5.3, voir feuille 7004-73.

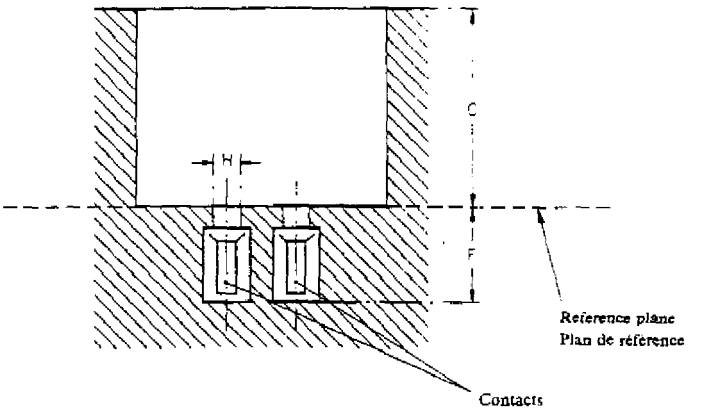

Scale
Echelle 2:1

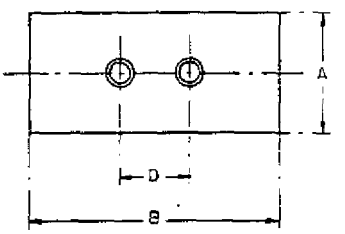

Lampholders shall fulfil the test requirements of the gauge shown on sheet 7006-73A.
In addition, the contacts shall accommodate the pin diameter tolerance of caps according to sheet 7004-73.

Les douilles doivent satisfaire aux essais au calibre selon la feuille 7006-73A.
En outre, les contacts doivent être compatibles avec les tolérances de diamètre des broches des culots selon la feuille 7004-73.

Standard dimensions Dimensions normalisées			Nearest equivalents in inches Equivalents arrondis en pouces	
Dimension	Min.	Max.	Min.	Max.
A (1)	8.94	—	0.352	—
B (1)	19.10	—	0.752	—
C (2)	—	15.20	—	0.598
D	5.33		0.210	
F	7.16	—	0.282	—
H	1.93	2.16	0.076	0.085

(1) Within the area enclosed by dimensions A and B, there shall be no projections extending beyond the reference plane. The seating surface need not to be continuous but shall be adequate to establish the reference plane and provide sufficient support for the bosses of the cap.

(2) Dimension C denotes the depth or height of any associated recess or aperture provided for the body of the cap.

(1) Dans l'aire délimitée par les dimensions A et B, aucune irrégularité de surface ne doit dépasser le plan de référence. La surface d'assise peut avoir une ou plusieurs parties séparées, mais doit établir le plan de référence de manière suffisante et comporter des moyens d'appui suffisants pour les bossages du culot.

(2) La dimension C définit la profondeur ou la hauteur de tout creux ou encoche prévu pour le socle.

Copyright National Electrical Manufacturers Association
Provided by IHS under license with NEMA
No reproduction or networking permitted without license from IHS — Not for Resale

Nationally Acknowledged International Standard

Approved May 18, 2001

Secretariat: American National Standards Lighting Group
In Affiliation with National Electrical Manufacturers Association

Supplement to
American National Standard for

Lampholders for Electrical Lamps

GZ4 & P32/PK32 Lampholders

A Nationally Acknowledged International Standard implies a consensus of those substantially concerned with its scope and provisions. This Standard is intended as a guide to aid the manufacturer, the consumer, and the general public. The use of a Nationally Acknowledged International Standard is completely voluntary; its existence does not in any respect preclude anyone, whether he has approved the standard or not, from manufacturing, marketing, purchasing, or using products, processes, or procedures not conforming to the standard.

The American National Standards Institute does not develop standards and will in no circumstances give an interpretation of any Standard. Moreover, no person shall have the right or authority to issue an interpretation of a National or International Standard in the name of the American National Standards Institute. Requests for interpretations should be addressed to the secretariat or sponsor whose name appears on the title page of this Standard.

Copyright © 2001 by American National Standards Lighting Group, in Affiliation with National Electrical Manufacturers Association, 1300 North 17th Street, Suite 1847, Rosslyn, VA 22209

Copyright National Electrical Manufacturers Association
Provided by IHS under license with NEMA
No reproduction or networking permitted without license from IHS

Not for Resale

Nationally Acknowledged International Standard

This is the first of a new generation of ANSI standards. It contains Standard Sheets from IEC publications that cover internationally-manufactured lighting components as well as those of American manufacture. These IEC Sheets have been adopted as a supplement to the existing American National Standard.

Approval of a Nationally Acknowledged International Standard requires verification by ANSI that the requirements for due process, consensus, and other criteria for approval have been met by the standards developer.

Consensus is established when, in the judgment of the ANSI Board of Standards Review, substantial agreement has been reached by directly and materially affected interests. Substantial agreement means much more than a simple majority, but not necessarily unanimity. Consensus requires that all views and objections be considered, and that a concerted effort be made toward their resolution.

CAUTION NOTICE: This Nationally Acknowledged International Standard may be revised or withdrawn at any time, as can the American National Standard that this supplement is appended to. The procedures of the American National Standards Institute require that action be taken periodically to reaffirm, revise, or withdraw this standard. Purchasers of standards may receive current information on all standards by calling or writing the publisher.

Published by:

Information Handling Services/Global Engineering Documents
15 Inverness Way East, Englewood, CO 80112-5776
Under Contract with National Electrical Manufacturers Association

Copyright ©2001 by American National Standards Lighting Group
In Affiliation with National Electrical Manufacturers Association
All rights reserved.

No part of this publication may be reproduced in any form, in an electronic retrieval system or otherwise, without prior written permission of the publisher.

Printed in the United States of America

Copyright © 2001 by American National Standards Lighting Group, in Affiliation with National Electrical Manufacturers Association, 1300 North 17th Street, Suite 1847, Rosslyn, VA 22209

Copyright National Electrical Manufacturers Association
Provided by IHS under license with NEMA
No reproduction or networking permitted without license from IHS

Not for Resale

Nationally Acknowledged International Standard

Approved February 5, 1998

Secretariat: American National Lighting Group
In Affiliation with National Electrical Manufacturers Association

Supplement to
American National Standard for

Lampholders for Electric Lamps

Part 1 of 4:
GU4 Lampholders

A Nationally Acknowledged International Standard implies a consensus of those substantially concerned with its scope and provisions. This Standard is intended as a guide to aid the manufacturer, the consumer, and the general public. The use of a Nationally Acknowledged International Standard is completely voluntary; its existence does not in any respect preclude anyone, whether he has approved the standard or not, from manufacturing, marketing, purchasing, or using products, processes, or procedures not conforming to the standard.

The American National Standards Institute does not develop standards and will in no circumstances give an interpretation of any Standard. Moreover, no person shall have the right or authority to issue an interpretation of a National or International Standard in the name of the American National Standards Institute. *Requests for interpretations should be addressed to the secretariat or sponsor whose name appears on the title page of this Standard.*

Copyright © 1998 by American National Lighting Group, in Affiliation with National Electrical Manufacturers Association
1300 North 17th Street, Suite 1847, Rosslyn, VA 22209

First Edition
April 1999

Copyright National Electrical Manufacturers Association
Provided by IHS under license with NEMA
No reproduction or networking permitted without license from IHS

Not for Resale

ANSI/IEC C81.62w1-1998
Supplement to ANSI C81.62-1991 (R1996)

Nationally Acknowledged International Standard

This is the first of a new generation of ANSI standards. It contains Standard Sheets from IEC publications that cover internationally-manufactured parts as well as those of American manufacture. These IEC Sheets have been adopted as a supplement to the existing American National Standard.

Approval of a Nationally Acknowledged International Standard requires verification by ANSI that the requirements for due process, consensus, and other criteria for approval have been met by the standards developer.

Consensus is established when, in the judgment of the ANSI Board of Standards Review, substantial agreement has been reached by directly and materially affected interests. Substantial agreement means much more than a simple majority, but not necessarily unanimity. Consensus requires that all views and objections be considered, and that a concerted effort be made toward their resolution.

CAUTION NOTICE: This Nationally Acknowledged International Standard may be revised or withdrawn at any time, as can the American National Standard that this supplement is appended to. The procedures of the American National Standards Institute require that action be taken periodically to reaffirm, revise, or withdraw this standard. Purchasers of Standards may receive current information on all standards by calling or writing the publisher.

Published by:

Information Handling Service/Global Engineering Documents
15 Inverness Way East, Englewood, CO 80112-5776
Under Contract with National Electrical Manufacturers Association

Copyright © 1999 by American National Lighting Group
In Affiliation with National Electrical Manufacturers Association
All rights reserved.

No part of this publication may be reproduced in any form, in an electronic retrieval system or otherwise, without prior written permission of the publisher.

Printed in the United States of America

Copyright © 1998 by American National Lighting Group, in Affiliation with National Electrical Manufacturers Association
1300 North 17th Street, Suite 1847, Rosslyn, VA 22209

First Edition
April 1999

Copyright National Electrical Manufacturers Association
Provided by IHS under license with NEMA
No reproduction or networking permitted without license from IHS
Not for Resale

ANSI/IEC C81.62w-1998
Supplement to ANSI C81.62-1991 (R1996)

Nationally Acknowledged International Standard

Approved February 5, 1998

Secretariat: American National Lighting Group
In Affiliation with National Electrical Manufacturers Association

Supplement to
American National Standard for

Lampholders for Electric Lamps

E17, GR8, GR10q and W4.3x8.5d Lampholders

A Nationally Acknowledged International Standard implies a consensus of those substantially concerned with its scope and provisions. This Standard is intended as a guide to aid the manufacturer, the consumer, and the general public. The use of a Nationally Acknowledged International Standard is completely voluntary; its existence does not in any respect preclude anyone, whether he has approved the standard or not, from manufacturing, marketing, purchasing, or using products, processes, or procedures not conforming to the standard.

The American National Standards Institute does not develop standards and will in no circumstances give an interpretation of any Standard. Moreover, no person shall have the right or authority to issue an interpretation of a National or International Standard in the name of the American National Standards Institute. Requests for interpretations should be addressed to the secretariat or sponsor whose name appears on the title page of this Standard.

Copyright © 1998 by American National Lighting Group, in Affiliation with National Electrical Manufacturers Association, 1300 North 17th Street, Suite 1847, Rosslyn, VA 22209

First Edition
August 1999

Copyright National Electrical Manufacturers Association
Provided by IHS under license with NEMA
No reproduction or networking permitted without license from IHS

Not for Resale

ANSI/IEC C81.62w-1998
Supplement to ANSI C81.62-1991 (R1996)

Nationally Acknowledged International Standard

This is another in a new generation of ANSI standards. It contains Standard Sheets from IEC publications that cover internationally-manufactured parts as well as those of American manufacture. These IEC Sheets have been adopted as a supplement to the existing American National Standard.

Approval of a Nationally Acknowledged International Standard requires verification by ANSI that the requirements for due process, consensus, and other criteria for approval have been met by the standards developer.

Consensus is established when, in the judgment of the ANSI Board of Standards Review, substantial agreement has been reached by directly and materially affected interests. Substantial agreement means much more than a simple majority, but not necessarily unanimity. Consensus requires that all views and objections be considered, and that a concerted effort be made toward their resolution.

CAUTION NOTICE: This Nationally Acknowledged International Standard may be revised or withdrawn at any time, as can the American National Standard that this supplement is appended to. The procedures of the American National Standards Institute require that action be taken periodically to reaffirm, revise, or withdraw this standard. Purchasers of Standards may receive current information on all standards by calling or writing the publisher.

Published by:

Information Handling Services/Global Engineering Documents
15 Inverness Way East, Englewood, CO 80112-5776
Under Contract with National Electrical Manufacturers Association

Copyright ©1998 by American National Lighting Group
In Affiliation with National Electrical Manufacturers Association
All rights reserved.

No part of this publication may be reproduced in any form, in an electronic retrieval system or otherwise, without prior written permission of the publisher.

Printed in the United States of America

Copyright © 1998 by American National Lighting Group, in Affiliation with National Electrical Manufacturers Association, 1300 North 17th Street, Suite 1847, Rosslyn, VA 22209

First Edition
August 1999

Copyright National Electrical Manufacturers Association
Provided by IHS under license with NEMA
No reproduction or networking permitted without license from IHS
Not for Resale

6470247 0523142 839

ANSI/IEC C81.62v-2000
Supplement to ANSI C81.62-1990 (R1996)

Nationally Acknowledged International Standard

Approved January 3, 2001

Secretariat: American National Standards Lighting Group
In Affiliation with National Electrical Manufacturers Association

Supplement to
American National Standard for

Electrical Lamp Bases

BY22d Lampholders

A Nationally Acknowledged International Standard implies a consensus of those substantially concerned with its scope and provisions. This Standard is intended as a guide to aid the manufacturer, the consumer, and the general public. The use of a Nationally Acknowledged International Standard is completely voluntary; its existence does not in any respect preclude anyone, whether he has approved the standard or not, from manufacturing, marketing, purchasing, or using products, processes, or procedures not conforming to the standard.

The American National Standards Institute does not develop standards and will in no circumstances give an interpretation of any Standard. Moreover, no person shall have the right or authority to issue an interpretation of a National or International Standard in the name of the American National Standards Institute. Requests for interpretations should be addressed to the secretariat or sponsor whose name appears on the title page of this Standard.

Copyright © 2001 by American National Standards Lighting Group, in Affiliation with National Electrical Manufacturers Association, 1300 North 17th Street, Suite 1847, Rosslyn, VA 22209

Copyright National Electrical Manufacturers Association
Provided by IHS under license with NEMA
No reproduction or networking permitted without license from IHS

Not for Resale

6470247 0523143 775

Nationally Acknowledged International Standard

This is the first of a new generation of ANSI standards. It contains Standard Sheets from IEC publications that cover internationally-manufactured lighting components as well as those of American manufacture. These IEC Sheets have been adopted as a supplement to the existing American National Standard.

Approval of a Nationally Acknowledged International Standard requires verification by ANSI that the requirements for due process, consensus, and other criteria for approval have been met by the standards developer.

Consensus is established when, in the judgment of the ANSI Board of Standards Review, substantial agreement has been reached by directly and materially affected interests. Substantial agreement means much more than a simple majority, but not necessarily unanimity. Consensus requires that all views and objections be considered, and that a concerted effort be made toward their resolution.

CAUTION NOTICE: This Nationally Acknowledged International Standard may be revised or withdrawn at any time, as can the American National Standard that this supplement is appended to. The procedures of the American National Standards Institute require that action be taken periodically to reaffirm, revise, or withdraw this standard. Purchasers of standards may receive current information on all standards by calling or writing the publisher.

Published by:

Information Handling Services/Global Engineering Documents
15 Inverness Way East, Englewood. CO 80112-5776
Under Contract with National Electrical Manufacturers Association

Copyright ©2001 by American National Standards Lighting Group
In Affiliation with National Electrical Manufacturers Association
All rights reserved.

No part of this publication may be reproduced in any form, in an electronic retrieval system or otherwise, without prior written permission of the publisher.

Printed in the United States of America

Copyright © 2001 by American National Standards Lighting Group, in Affiliation with National Electrical Manufacturers Association, 1300 North 17th Street, Suite 1847, Rosslyn, VA 22209

Copyright National Electrical Manufacturers Association
Provided by IHS under license with NEMA
No reproduction or networking permitted without license from IHS Not for Resale

6470247 0521782 026

ANSI/IEC C81.62u-1998
Supplement to ANSI C81.62-1990 (R1996)

Nationally Acknowledged International Standard

Approved September 22, 1999

Secretariat: American National Lighting Group
In Affiliation with National Electrical Manufacturers Association

Supplement to
American National Standard for

Lampholders for Electrical Lamps

W2.5 x 16 Bases

A Nationally Acknowledged International Standard implies a consensus of those substantially concerned with its scope and provisions. This Standard is intended as a guide to aid the manufacturer, the consumer, and the general public. The use of a Nationally Acknowledged International Standard is completely voluntary; its existence does not in any respect preclude anyone, whether he has approved the standard or not, from manufacturing, marketing, purchasing, or using products, processes, or procedures not conforming to the standard.

The American National Standards Institute does not develop standards and will in no circumstances give an interpretation of any Standard. Moreover, no person shall have the right or authority to issue an interpretation of a National or International Standard in the name of the American National Standards Institute. Requests for interpretations should be addressed to the secretariat or sponsor whose name appears on the title page of this Standard.

Copyright © 1999 by American National Lighting Group, in Affiliation with National Electrical Manufacturers Association, 1300 North 17th Street, Suite 1847, Rosslyn, VA 22209

Copyright National Electrical Manufacturers Association
Provided by IHS under license with NEMA
No reproduction or networking permitted without license from IHS

Not for Resale

6470247 0521783 T62

Nationally Acknowledged International Standard

This is the first of a new generation of ANSI standards. It contains Standard Sheets from IEC publications that cover internationally-manufactured lighting components as well as those of American manufacture. These IEC Sheets have been adopted as a supplement to the existing American National Standard.

Approval of a Nationally Acknowledged International Standard requires verification by ANSI that the requirements for due process, consensus, and other criteria for approval have been met by the standards developer.

Consensus is established when, in the judgment of the ANSI Board of Standards Review, substantial agreement has been reached by directly and materially affected interests. Substantial agreement means much more than a simple majority, but not necessarily unanimity. Consensus requires that all views and objections be considered, and that a concerted effort be made toward their resolution.

CAUTION NOTICE: This Nationally Acknowledged International Standard may be revised or withdrawn at any time, as can the American National Standard that this supplement is appended to. The procedures of the American National Standards Institute require that action be taken periodically to reaffirm, revise, or withdraw this standard. Purchasers of standards may receive current information on all standards by calling or writing the publisher.

Published by:

Information Handling Services/Global Engineering Documents
15 Inverness Way East, Englewood, CO 80112-5776
Under Contract with National Electrical Manufacturers Association

Copyright ©1999 by American National Lighting Group
In Affiliation with National Electrical Manufacturers Association
All rights reserved.

No part of this publication may be reproduced in any form, in an electronic retrieval system or otherwise, without prior written permission of the publisher.

Printed in the United States of America

Copyright © 1999 by American National Lighting Group, in Affiliation with National Electrical Manufacturers Association, 1300 North 17th Street, Suite 1847, Rosslyn, VA 22209

Copyright National Electrical Manufacturers Association
Provided by IHS under license with NEMA
No reproduction or networking permitted without license from IHS Not for Resale

Nationally Acknowledged International Standard

Approved June 24, 1998

Secretariat: American National Lighting Group
In Affiliation with National Electrical Manufacturers Association

Supplement to
American National Standard for

Lampholders for Electric Lamps

S14 Lampholders

A Nationally Acknowledged International Standard implies a consensus of those substantially concerned with its scope and provisions. This Standard is intended as a guide to aid the manufacturer, the consumer, and the general public. The use of a Nationally Acknowledged International Standard is completely voluntary; its existence does not in any respect preclude anyone, whether he has approved the standard or not, from manufacturing, marketing, purchasing, or using products, processes, or procedures not conforming to the standard.

The American National Standards Institute does not develop standards and will in no circumstances give an interpretation of any Standard. Moreover, no person shall have the right or authority to issue an interpretation of a National or International Standard in the name of the American National Standards Institute. Requests for interpretations should be addressed to the secretariat or sponsor whose name appears on the title page of this Standard.

Copyright © 1998 by American National Lighting Group, in Affiliation with National Electrical Manufacturers Association, 1300 North 17th Street, Suite 1847, Rosslyn, VA 22209

Copyright National Electrical Manufacturers Association
Provided by IHS under license with NEMA
No reproduction or networking permitted without license from IHS

Not for Resale

ANSI/IEC C81.62t-1998
Supplement to ANSI C81.62-1991 (R1996)

Nationally Acknowledged International Standard

This is one of a new generation of ANSI standards. It contains the *English only* text of an IEC publication that covers internationally-manufactured lighting components as well as those of American manufacture.

Approval of a Nationally Acknowledged International Standard requires verification by ANSI that the requirements for due process, consensus, and other criteria for approval have been met by the standards developer.

Consensus is established when, in the judgment of the ANSI Board of Standards Review, substantial agreement has been reached by directly and materially affected interests. Substantial agreement means much more than a simple majority, but not necessarily unanimity. Consensus requires that all views and objections be considered, and that a concerted effort be made toward their resolution.

CAUTION NOTICE: This Nationally Acknowledged International Standard may be revised or withdrawn at any time, as can the American National Standard that this supplement is appended to. The procedures of the American National Standards Institute require that action be taken periodically to reaffirm, revise, or withdraw this standard. Purchasers of Standards may receive current information on all standards by calling or writing the publisher.

DISCLAIMER: The standards or guidelines presented in a NEMA Standards Publication are considered technically sound at the time they are approved for publication. They are not a substitute for a product seller's or user's own judgment with respect to the particular product referenced in the standard or guideline, and NEMA does not undertake to guaranty the performance of any individual manufacturer's products by virtue of this standard or guide. Thus, NEMA expressly disclaims any responsibility for damages arising from the use, application, or reliance by others on the information contained in these standards or guidelines.

Printed and distributed by:

Information Handling Service/Global Engineering Documents
15 Inverness Way East, Englewood, CO 80112-5776
Under Contract with National Electrical Manufacturers Association

Copyright © 1998 by American National Lighting Group
In Affiliation with National Electrical Manufacturers Association. All rights reserved.

No part of this publication may be reproduced in any form, in an electronic retrieval system or otherwise, without prior written permission of the publisher.

Printed in the United States of America

Copyright © 1998 by American National Lighting Group, in Affiliation with National Electrical Manufacturers Association, 1300 North 17th Street, Suite 1847, Rosslyn, VA 22209

Copyright National Electrical Manufacturers Association
Provided by IHS under license with NEMA
No reproduction or networking permitted without license from IHS

Not for Resale

6470247 0521773 013

ANSI/IEC C81.62ss-1999
Supplement to ANSI C81.62-1991 (R1996)

Nationally Acknowledged International Standard

Approved March 22, 1999

Secretariat: American National Lighting Group
In Affiliation with National Electrical Manufacturers Association

Supplement to
American National Standard for

Lampholders for Electric Lamps

GU7 & PG12/PGX12 Lampholders

A Nationally Acknowledged International Standard implies a consensus of those substantially concerned with its scope and provisions. This Standard is intended as a guide to aid the manufacturer, the consumer, and the general public. The use of a Nationally Acknowledged International Standard is completely voluntary; its existence does not in any respect preclude anyone, whether he has approved the standard or not, from manufacturing, marketing, purchasing, or using products, processes, or procedures not conforming to the standard.

The American National Standards Institute does not develop standards and will in no circumstances give an interpretation of any Standard. Moreover, no person shall have the right or authority to issue an interpretation of a National or International Standard in the name of the American National Standards Institute. Requests for interpretations should be addressed to the secretariat or sponsor whose name appears on the title page of this Standard.

Copyright © 1999 by American National Lighting Group, in Affiliation with National Electrical Manufacturers Association, 1300 North 17th Street, Suite 1847, Rosslyn, VA 22209

First Edition
March 1999

Copyright National Electrical Manufacturers Association
Provided by IHS under license with NEMA
No reproduction or networking permitted without license from IHS

Not for Resale

6470247 0521774 T5T

ANSI/IEC C81.62ss-1999
Supplement to ANSI C81.62-1991 (R1996)

Nationally Acknowledged International Standard

This is the first of a new generation of ANSI standards. It contains Standard Sheets from IEC publications that cover internationally-manufactured parts as well as those of American manufacture. These IEC Sheets have been adopted as a supplement to the existing American National Standard.

Approval of a Nationally Acknowledged International Standard requires verification by ANSI that the requirements for due process, consensus, and other criteria for approval have been met by the standards developer.

Consensus is established when, in the judgment of the ANSI Board of Standards Review, substantial agreement has been reached by directly and materially affected interests. Substantial agreement means much more than a simple majority, but not necessarily unanimity. Consensus requires that all views and objections be considered, and that a concerted effort be made toward their resolution.

CAUTION NOTICE: This Nationally Acknowledged International Standard may be revised or withdrawn at any time, as can the American National Standard that this supplement is appended to. The procedures of the American National Standards Institute require that action be taken periodically to reaffirm, revise, or withdraw this standard. Purchasers of standards may receive current information on all standards by calling or writing the publisher.

Published by:

Information Handling Services/Global Engineering Documents
15 Inverness Way East, Englewood, CO 80112-5776
Under Contract with National Electrical Manufacturers Association

Copyright ©1999 by American National Lighting Group
In Affiliation with National Electrical Manufacturers Association
All rights reserved.

No part of this publication may be reproduced in any form, in an electronic retrieval system or otherwise, without prior written permission of the publisher.

Printed in the United States of America

Copyright © 1999 by American National Lighting Group, in Affiliation with National Electrical Manufacturers Association, 1300 North 17th Street, Suite 1847, Rosslyn, VA 22209

First Edition
March 1999

Copyright National Electrical Manufacturers Association
Provided by IHS under license with NEMA
No reproduction or networking permitted without license from IHS
Not for Resale

ANSI C81.62s-1998
Supplement to ANSI C81.62-1991 (R1996)

American National Standard

Approved March 3, 1998 Secretariat: National Electrical Manufacturers Association

for electric lamps—

Lampholders for Electric Lamps

An American National Standard implies a consensus of those substantially concerned with its scope and provisions. An American National Standard is intended as a guide to aid the manufacturer, the consumer, and the general public. The existence of an American National Standard does not in any respect preclude anyone, whether he has approved the standard or not, from manufacturing, marketing, purchasing, or using products, processes, or procedures not conforming to the standard.
The American National Standards Institute does not develop standards and will in no circumstances give an interpretation of any American National Standard. Moreover, no person shall have the right or authority to issue an interpretation of an American National Standard in the name of the American National Standards Institute. Requests for interpretations should be addressed to the secretariat or sponsor whose name appears on the title page of this standard.
CAUTION NOTICE: This American National Standard may be revised or withdrawn at any time. The procedures of the American National Standards Institute require that action be taken periodically to reaffirm, revise, or withdraw this standard. Purchasers of American National Standards may receive current information on all standards by calling or writing the American National Standards Institute.

Copyright © 1998 by National Electrical Manufacturers Association
1300 North 17th Street, Suite 1847, Rosslyn, VA 22209

First Edition
October 1998

Copyright National Electrical Manufacturers Association
Provided by IHS under license with NEMA
No reproduction or networking permitted without license from IHS
Not for Resale

ANSI C81.62s-1998
Supplement to ANSI C81.62-1991 (R1996)

American National Standard

Approval of an American National Standard requires verification by ANSI that the requirements for due process, consensus, and other criteria for approval have been met by the standards developer.

Consensus is established when, in the judgment of the ANSI Board of Standards Review, substantial agreement has been reached by directly and materially affected interests. Substantial agreement means much more than a simple majority, but not necessarily unanimity. Consensus requires that all views and objections be considered, and that a concerted effort be made toward their resolution.

The use of American National Standards is completely voluntary; their existence does not in any respect preclude anyone, whether he has approved the standards or not, from manufacturing, marketing, purchasing, or using products, processes, or procedures not conforming to the standards.

The American National Standards Institute does not develop standards and will in no circumstances give an interpretation of any American National Standard. More over, no person shall have the right or authority to issue an interpretation of an American National Standard in the name of the American National Standards Institute. Requests for interpretations should be addressed to the secretariat or sponsor whose name appears on the title page of this standard.

CAUTION NOTICE: This American National Standard may be revised or withdrawn at any time. The procedures of the American National Standards Institute require that action be taken periodically to reaffirm, revise, or withdraw this standard. Purchasers of American National Standards may receive current information on all standards by calling or writing the American National Standards Institute.

Published by
National Electrical Manufacturers Association
1300 North 17th Street, Suite 1847, Rosslyn, VA 22209

Copyright ©1998 by National Electrical Manufacturers Association
All rights reserved.

No part of this publication may be reproduced in any form, in an electronic retrieval system or otherwise, without prior written permission of the publisher.

Printed in the United States of America

Copyright © 1998 by National Electrical Manufacturers Association
1300 North 17th Street, Suite 1847, Rosslyn, VA 22209

First Edition
October 1998

Copyright National Electrical Manufacturers Association
Provided by IHS under license with NEMA
No reproduction or networking permitted without license from IHS
Not for Resale

ANSI C81.62n-1997
Supplement to ANSI C81.62-1990 (R1996)

American National Standard

Approved September 25, 1997 Secretariat: National Electrical Manufacturers Association

for electric lamps:

Lampholders

An American National Standard implies a consensus of those substantially concerned with its scope and provisions. It is intended as a guide to aid the manufacturer, the consumer, and the general public. The existence of an American National Standard does not in any respect preclude anyone, whether he has approved the standard or not, from manufacturing, marketing, purchasing, or using products, processes, or procedures not conforming to the standards. Users are cautioned to obtain the latest editions.
The American National Standards Institute does not develop standards and will in no circumstances give an interpretation of any American National Standard. Moreover, no person shall have the right or authority to issue an interpretation of an American National Standard in the name of the American National Standards Institute.
CAUTION NOTICE: This American National Standard may be revised or withdrawn at any time. The procedures of the American National Standards Institute require that action be taken periodically to reaffirm, revise, or withdraw this standard. Purchasers of American National Standards may receive current information on all standards by calling or writing the American National Standards Institute.

Copyright © 1997 by National Electrical Manufacturers Association
1300 North 17th Street, Suite 1847, Rosslyn, VA 22209

First Edition
December 1997

Copyright National Electrical Manufacturers Association
Provided by IHS under license with NEMA
No reproduction or networking permitted without license from IHS
Not for Resale

American National Standard

Approval of an American National Standard requires verification by ANSI that the requirements for due process, consensus, and other criteria for approval have been met by the standards developer. An American National Standard implies a consensus of those substantially concerned with its scope and provisions. Consensus is established when, in the judgment of the ANSI Board of Standards Review, substantial agreement has been reached by directly and materially affected interests. Substantial agreement means much more than a simple majority, but not necessarily unanimity. Consensus requires that all views and objections be considered, and that a concerted effort be made toward their resolution. The existence of an American National Standard does not in any respect preclude anyone, whether he has approved the standard or not, from manufacturing, marketing, purchasing, or using products, processes, or procedures not conforming to the standards. It is intended as a guide to aid the manufacturer, the consumer, and the general public.

The American National Standards Institute does not develop standards and will in no circumstances give an interpretation of any American National Standard. Moreover, no person shall have the right or authority to issue an interpretation of an American National Standard in the name of the American National Standards Institute. Requests for interpretations should be addressed to the secretariat or sponsor whose name appears on this title page.

CAUTION NOTICE: This American National Standard may be revised or withdrawn at any time. The procedures of the American National Standards Institute require that action be taken periodically to reaffirm, revise, or withdraw this standard. Purchasers of American National Standards may receive current information on all standards by calling or writing the American National Standards Institute.

Published by

National Electrical Manufacturers Association

No part of this publication may be reproduced in any form, in an electronic retrieval system or otherwise, without prior written permission of the publisher.

Printed in the United States of America

Copyright © 1997 by National Electrical Manufacturers Association
1300 North 17th Street, Suite 1847, Rosslyn, VA 22209

First Edition
December 1997

Copyright National Electrical Manufacturers Association
Provided by IHS under license with NEMA
No reproduction or networking permitted without license from IHS
Not for Resale

ANSI C81.62f-1996
Supplement to ANSI C81.62-1990

American National Standard

Approved March 22, 1996 | Secretariat: National Electrical Manufacturers Association

for electric lamps:

Contents

Base	Common Name	Standard Sheet Number
E11	Mini-Can Screw Lampholder	2-123-2
E17	Intermediate Screw Lampholder	2-144-2

An American National Standard implies a consensus of those substantially concerned with its scope and provisions. It is intended as a guide to aid the manufacturer, the consumer, and the general public. The existence of an American National Standard does not in any respect preclude anyone, whether he has approved the standard or not, from manufacturing, marketing, purchasing, or using products, processes, or procedures not conforming to the standards. Users are cautioned to obtain the latest editions.
The American National Standards Institute does not develop standards and will in no circumstances give an interpretation of any American National Standard. Moreover, no person shall have the right or authority to issue an interpretation of an American National Standard in the name of the American National Standards Institute.
CAUTION NOTICE: This American National Standard may be revised or withdrawn at any time. The procedures of the American National Standards Institute require that action be taken periodically to reaffirm, revise, or withdraw this standard. Purchasers of American National Standards may receive current information on all standards by calling or writing the American National Standards Institute.

Copyright © 1996 by National Electrical Manufacturers Association
1300 North 17th Street, Suite 1847, Rosslyn, VA 22209

First Edition
November 1996

Copyright National Electrical Manufacturers Association
Provided by IHS under license with NEMA
No reproduction or networking permitted without license from IHS
Not for Resale

ANSI C81.62f-1996
Supplement to ANSI C81.62-1990

Copyright © 1996 by National Electrical Manufacturers Association
1300 North 17th Street, Suite 1847, Rosslyn, VA 22209

First Edition
November 1996

Copyright National Electrical Manufacturers Association
Provided by IHS under license with NEMA
No reproduction or networking permitted without license from IHS

Not for Resale

NEMA C81.62E 96 ■ 6470247 0509914 879 ■

ANSI C81.62e-1996
Supplement to ANSI C81.62-1991

American National Standard

Approved March 22, 1996 Secretariat: National Electrical Manufacturers Association

CONTENTS

Base	Common Name Number	Standard Sheet
G5	Miniature Bipin Lampholder	2-310-2

An American National Standard implies a consensus of those substantially concerned with its scope and provisions. An American National Standard is intended as a guide to aid the manufacturer, the consumer, and the general public. The existence of an American National Standard does not in any respect preclude anyone, whether he has approved the standard or not, from manufacturing, marketing, purchasing, or using products, processes, or procedures not conforming to the standard. American National Standards are subject to periodic review and users are cautioned to obtain the latest editions.
The American National Standards Institute does not develop standards and will in no circumstances give an interpretation of any American National Standard. Moreover, no person shall have the right or authority to issue an interpretation of an American National Standard in the name of the American National Standards Institute.
CAUTION NOTICE: This American National Standard may be revised or withdrawn at any time. The procedures of the American National Standards Institute require that action be taken to reaffirm, revise, or withdraw this standard no later than five years from the date of approval. Purchasers of American National Standards may receive current information on all standards by calling or writing the American National Standards Institute.

Copyright © 1996 by the National Electrical Manufacturers Association
1300 North 17th Street, Suite 1847, Rosslyn, VA 22209

First Edition
May, 1996

Copyright National Electrical Manufacturers Association
Provided by IHS under license with NEMA
No reproduction or networking permitted without license from IHS
Not for Resale

ANSI C81.62e-1996
Supplement to ANSI C81.62-1991

Copyright National Electrical Manufacturers Association
Provided by IHS under license with NEMA
No reproduction or networking permitted without license from IHS

Not for Resale

NEMA C81.62D 95 ■ 6470247 0509740 0T9 ■

ANSI C81.62d-1995
Supplement to C81.62-1991

American National Standard

Approved November 15, 1995 Secretariat: National Electrical Manufacturers Association

CONTENTS

Code Number	Common Name	Standard Sheet Number
G16d	Mogul End-Prong Connector	2-430-2

An American National Standard implies a consensus of those substantially concerned with its scope and provisions. An American National Standard is intended as a guide to aid the manufacturer, the consumer, and the general public. The existence of an American National Standard does not in any respect preclude anyone, whether he has approved the standard or not, from manufacturing, marketing, purchasing, or using products, processes, or procedures not conforming to the standard. American National Standards are subject to periodic review and users are cautioned to obtain the latest editions.

The American National Standards Institute does not develop standards and will in no circumstances give an interpretation of any American National Standard. Moreover, no person shall have the right or authority to issue an interpretation of an American National Standard in the name of the American National Standards Institute.

CAUTION NOTICE: This American National Standard may be revised or withdrawn at any time. The procedures of the American National Standards Institute require that action be taken to reaffirm, revise, or withdraw this standard no later than five years from the date of approval. Purchasers of American National Standards may receive current information on all standards by calling or writing the American National Standards Institute.

Copyright © 1996 by the National Electrical Manufacturers Association
1300 North 17th Street, Suite 1847, Rosslyn, VA 22209

Copyright National Electrical Manufacturers Association
Provided by IHS under license with NEMA
No reproduction or networking permitted without license from IHS

Not for Resale

ANSI C81.62c-1995
Supplement to C81.62-1991

Copyright National Electrical Manufacturers Association
Provided by IHS under license with NEMA
No reproduction or networking permitted without license from IHS

Not for Resale

ANSI C81.62c-1995
Supplement to C81.62-1991

American National Standard

Approved April 18, 1995 Secretariat: National Electrical Manufacturers Association

CONTENTS

System Designation	Common Name	Standard Sheet Number
E39d	Double Contact Mogul Screw Lampholder	2-187-1
P8.25d	Lampholder	2-530-1
PG12	Lampholder	2-545-1
P12.4d	Lampholder	2-550-1

An American National Standard implies a consensus of those substantially concerned with its scope and provisions. An American National Standard is intended as a guide to aid the manufacturer, the consumer, and the general public. The existence of an American National Standard does not in any respect preclude anyone, whether he has approved the standard or not, from manufacturing, marketing, purchasing, or using products, processes, or procedures not conforming to the standard. American National Standards are subject to periodic review and users are cautioned to obtain the latest editions.

The American National Standards Institute does not develop standards and will in no circumstances give an interpretation of any American National Standard. Moreover, no person shall have the right or authority to issue an interpretation of an American National Standard in the name of the American National Standards Institute.

CAUTION NOTICE: This American National Standard may be revised or withdrawn at any time. The procedures of the American National Standards Institute require that action be taken to reaffirm, revise, or withdraw this standard no later than five years from the date of approval. Purchasers of American National Standards may receive current information on all standards by calling or writing the American National Standards Institute.

Copyright © 1996 by the National Electrical Manufacturers Association
1300 North 17th Street, Suite 1847, Rosslyn, VA 22209

Copyright National Electrical Manufacturers Association
Provided by IHS under license with NEMA
No reproduction or networking permitted without license from IHS
Not for Resale

ANSI C81.62c-1995
Supplement to C81.62-1991

Copyright National Electrical Manufacturers Association
Provided by IHS under license with NEMA
No reproduction or networking permitted without license from IHS

Not for Resale

ANSI C81.62b-1995
Supplement to C81.62-1991

American National Standard

Approved October 10, 1994 Secretariat: National Electrical Manufacturers Association

CONTENTS

See next page for Table of Contents

An American National Standard implies a consensus of those substantially concerned with its scope and provisions. An American National Standard is intended as a guide to aid the manufacturer, the consumer, and the general public. The existence of an American National Standard does not in any respect preclude anyone, whether he has approved the standard or not, from manufacturing, marketing, purchasing, or using products, processes, or procedures not conforming to the standard. American National Standards are subject to periodic review and users are cautioned to obtain the latest editions.

The American National Standards Institute does not develop standards and will in no circumstances give an interpretation of any American National Standard. Moreover, no person shall have the right or authority to issue an interpretation of an American National Standard in the name of the American National Standards Institute.

CAUTION NOTICE: This American National Standard may be revised or withdrawn at any time. The procedures of the American National Standards Institute require that action be taken to reaffirm, revise, or withdraw this standard no later than five years from the date of approval. Purchasers of American National Standards may receive current information on all standards by calling or writing the American National Standards Institute.

Copyright © 1995 by the National Electrical Manufacturers Association, 2101 L Street, N.W., Washingotn, D.C. 20037

Copyright National Electrical Manufacturers Association
Provided by IHS under license with NEMA
No reproduction or networking permitted without license from IHS Not for Resale

ANSI C81.62a-1993
Supplement to ANSI C81.62-1991

American National Standard

Supplement to C81.62-1991 and
partial revision and consolidation
of ANSI C81.10-1976, C81.2-1976,
C81.30-1976, C81.40-1976, and C81.50-1976

Approved May 14, 1993 Secretariat: National Electrical Manufacturers Association

This publication replaces C81.55-1989, never published.

CONTENTS

Code	Common Name	Standard Sheet Number
BY22d	Lampholder	2-30-2
E12	E12 Candelabra Screw Lampholder	2-131-2
E39	E39 Mogul Screw Lampholder	2-185-2
2G11	2G11 Lampholder	2-393-2
G/GX32	G32 and GX32 Lampholders	2-506-1
GZ6.35	GZ6.35 Connector	2-342-1

An American National Standard implies a consensus of those substantially concerned with its scope and provisions. An American National Standard is intended as a guide to aid the manufacturer, the consumer, and the general public. The existence of an American National Standard does not in any respect preclude anyone,whether he has approved the standard or not, from manufacturing, marketing, purchasing, or using products, processes, or procedures not conforming to the standard. American National Standards are subject to periodic review and users are cautioned to obtain the latest editions.

The American National Standards Institute does not develop standards and will in no circumstances give an interpretation of any American National Standard. Moreover, no person shall have right or authority to issue an interpretation of an American National Standard in the name of the American National Standards Institute.

Caution Notice: This American National Standard may be revised or withdrawn at any time. The procedures of the American National Standards Institute require that action be taken to reaffirm, revise, or withdraw this standard no later than five years from the date of approval. Purchasers of American National Standards may receive current information on all standards by calling or writing the American National Standards Institute.

Copyright ©1993 by National Electrical Manufacturers Association, 2101 L Street, N.W., Washington, D.C. 20037

Copyright National Electrical Manufacturers Association
Provided by IHS under license with NEMA
No reproduction or networking permitted without license from IHS

Not for Resale

ANSI C81.62 91 ■ 0724150 0508465 8T6 ■



for Lampholders for Electric Lamps

ANSI C81.62-1991

ANSI American National Standards Institute
11 West 42nd Street
New York, New York
10036

Copyright National Electrical Manufacturers Association
Provided by IHS under license with NEMA
No reproduction or networking permitted without license from IHS

Not for Resale

ANSI®
C81.62-1991

Partial revision and consolidation of
ANSI C81.10-1976, C81.20-1976, C81.30-1976,
C81.40-1976, and C81.50-1976

American National Standard for Lampholders for Electric Lamps

Secretariat
National Electrical Manufacturers Association

Approved July 15, 1991
American National Standards Institute, Inc.

Copyright National Electrical Manufacturers Association
Provided by IHS under license with NEMA
No reproduction or networking permitted without license from IHS

Not for Resale

American National Standard

Approval of an American National Standard requires verification by ANSI that the requirements for due process, consensus, and other criteria for approval have been met by the standards developer.

Consensus is established when, in the judgment of the ANSI Board of Standards Review, substantial agreement has been reached by directly and materially affected interests. Substantial agreement means much more than a simple majority, but not necessarily unanimity. Consensus requires that all views and objections be considered, and that a concerted effort be made toward their resolution.

The use of American National Standards is completely voluntary; their existence does not in any respect preclude anyone, whether he has approved the standards or not, from manufacturing, marketing, purchasing, or using products, processes, or procedures not conforming to the standards.

The American National Standards Institute does not develop standards and will in no circumstances give an interpretation of any American National Standard. Moreover, no person shall have the right or authority to issue an interpretation of an American National Standard in the name of the American National Standards Institute. Requests for interpretations should be addressed to the secretariat or sponsor whose name appears on the title page of this standard.

CAUTION NOTICE: This American National Standard may be revised or withdrawn at any time. The procedures of the American National Standards Institute require that action be taken periodically to reaffirm, revise, or withdraw this standard. Purchasers of American National Standards may receive current information on all standards by calling or writing the American National Standards Institute.

Published by

American National Standards Institute
11 West 42nd Street, New York, New York 10036

Copyright © 1992 by American National Standards Institute
All rights reserved.

No part of this publication may be reproduced in any form, in an electronic retrieval system or otherwise, without prior written permission of the publisher.

Printed in the United States of America

ANSI2C1292/120

Copyright National Electrical Manufacturers Association
Provided by IHS under license with NEMA
No reproduction or networking permitted without license from IHS

Not for Resale

Foreword

(This Foreword is not part of American National Standard C81.62-1991.)

ANSI C81.62-1991 was a new presentation of the standard sheets of lampholders for electric lamps. This standard does not contain any sheets for bases or gauges.

This arrangement is a major departure from the previous standards in the C81 series. A primary feature of this new format is that all the new lampholder sheets are concentrated in one standard. Secondly, the general format of the sheets has been revised to offer better associations among related bases, lampholders, and gauges. Also, on the ANSI sheets, test requirements are now located on the products sheets (base sheet or holder sheet) to which they apply, as opposed to being located on the gauge sheets as is done in IEC.

A standard in the old series of standards (ANSI C81.10, ANSI C81.20, and so on) contained the standard sheets for a certain category of bases along with their associated holders and gauges. Under the new approach, base sheets are in ANSI C81.61-1990, holders in another standard (ANSI C81.62-1991), and gauges in a third standard (ANSI C81.63-1991). In addition, a fourth standard (ANSI C81.64-1993) contains detailed information on designations, threads, gauging tolerances etc. This pattern is similar to the organization of the IEC standards for base and holder systems.

Under this new scheme, ANSI C81.61-1990, ANSI C81.62-1991 and ANSI C81.63-1991, have replaced the old standards. Therefore, the old standards have been withdrawn.

With this issue in the new format, the titles of the data sheets show new names for the bases. These names are generally a combination of an IEC designation and a common name. It is assumed that a transition phase, of several years duration, in which both kinds of identification are shown will help familiarize users with the IEC designations. Eventually, it is expected that use of IEC designations will be sufficient. New fits, for which common names have never been assigned, bear only their IEC designations.

The new lampholder standard sheets in this document are generally not changed technically from older versions. However, some work being processed by the C81 subcommittees has been merged into the new standard. Also, some new lampholder types have been added.

With the issuance of this supplement, C81.62g, a major change has taken place. IEC standards which are fully harmonized with their ANSI equivalents have been adopted as American National Standards and replace the old ANSI standard sheets. While the ANSI/IEC sheets have a different system of sheet numbering, they are filed in alphanumeric sequence of IEC designation with the remaining ANSI standard sheets. The Annex contains a cross-reference, relating the new ANSI sheet numbers and ANSI/IEC sheet numbers to the old (withdrawn) system.

The ANSI/IEC standard sheets are taken from IEC 61-2. The drawings on these internationally standardized sheets are in first angle projection rather than third angle commonly used in North American approved standard sheets. Annex B explains difference between the two systems. In addition, the common American term "Base" is internationally known as "cap." Internationally the decimal point (.) is not used in dimensions, rather a comma (,) separates a decimal number e.g. 4,5 rather than 4.5. However, in the designation of a fit the decimal point is used e.g. GY6.35.
This standard contains an annex which is informative and is not considered a part of this standard.

Suggestions for improvement of this standard will be welcome. They shall be sent to the National Electrical Manufacturers Association, 1300 North 17th St., Suite 1847, Rosslyn, VA 22209.

Copyright National Electrical Manufacturers Association
Provided by IHS under license with NEMA
No reproduction or networking permitted without license from IHS
Not for Resale

ANSI C81.62g-1996
Supplement to ANSI C81.62-1991

This standard was processed and approved for submittal by Accredited Standards Committee on Electrical Lamp Bases and Holders, C81, and Sub-Committees C81-1 for Specialty-Use Bases and Holders, C81-5 for Fluorescent Lamp Bases and Holders, C81-10 for General Use Lamp Bases and Holders, and C81-11 for Bases and Holders for Photo Lamps. Committee approval of the standard does not necessarily imply that all committee members voted for its approval. At the time of publication of this standard, the Committees had the following members:

Charles Chase, Chairman C81
Randolph N. Roy, Secretariat
Jeanne L. Spicer, Coordinating Editor

Organizations Represented	*Name of Representative*
Duro-Test Corporation	Larry Sheinberg
General Electric Lighting	John P. Krissinger
Leviton Manufacturing Company	Charles Chase
National Electrical Manufacturers Association	Dennis Oddsen (delegate)
OSRAM SYLVANIA INC	Peter Bleasby
Philips Lighting	Al Rousseau

John Forish, Chairman C81-1
Richard Fleegal, Chairman C81-10
Randolph N. Roy, Secretariat

Charles Chase, Chairman C81-5
David H. Fox, Chairman C81-11

Organizations Represented	*Name of Representative*
Eastman Kodak Company	William E Moore
Ford Motor Company	Roman Witek
General Electric Company	Don Kikta
	Fred Hetzel
GE Lighting Company	Bernard W. Rachel
	John P. Krissinger
Leviton Manufacturing Company	Charles Chase
	Aaron Chase
	Anthony Tufano
Micro Lamps, Inc.	Thomas Knopp
OSRAM SYLVANIA, INC.	Richard Fleegal
	David H. Fox
	Gary Cunkleman
	David T. Mullen
	Jeff Buschmann
Philips Lighting, Inc.	Al Rousseau
	M. M. Mujahid
	Eep Peuchen
	Richard Scott
Underwriters Laboratories, Inc.	Anthony Tassone
Zanxx, Inc.	John Forish

Copyright National Electrical Manufacturers Association
Provided by IHS under license with NEMA
No reproduction or networking permitted without license from IHS
Not for Resale

Universal Contents of C81.62
Lampholders for Electric Lamps

System	Title	Std. Sheet No.	Published In
BA9	Miniature Bayonet Lampholder	2-10-3	C81.62z-98
BA/BAY/BAZ15	Candelabra Bayonet Lampholders	2-20-1	C81.62-91
BY22d	Lampholder	7005-17-5	C81.62v-00
E5	Midget Screw Lampholder	2-100-1	C81.62-91
E10	Miniature Screw Lampholder	2-111-1	C81.62-91
E11	Mini-Can Screw Lampholder	2-123-2	C81.62f-96
E12	Candelabra Screw Lampholder	2-131-2	C81.62a-93
E17	Intermediate Screw Lampholder	2-144-2	C81.62f-96
E26	Single-Contact Medium Screw Lampholder	2-157-1	C81.62-91
E26d	Double-Contact Medium Screw Lampholder	2-158-1	C81.62-91
E39	Lampholders	7005-24A-1	C81.62g-97
E39d	Double-Contact Mogul Screw Lampholder	2-187-1	C81.62c-95
EP39	Position-Oriented Mogul Screw Lampholder	2-202-1	C81.62-91
Fa8	Single-Pin Fluorescent Lampholder	2-250-1	C81.62-91
G3.9	Lampholder	2-300-1	C81.62-91
GU4	Lampholder	7005-108-2	C81.62w-98
G5	Miniature Bi-Pin Lampholder	2-310-2	C81.62e-96
G5.3	Lampholder	2-320-1	C81.62-91
GU5.3	Lampholder	7005-109-1	C81.62g-97
GX5.3	Lampholders and Connectors	2-321-2	C81.62n-97
GY5.3	Lampholders and Connectors	2-322-2	C81.62n-97
G/GY6.35	Lampholders	2-340-1	C81.62-91
GZ6.35	Connector	2-342-1	C81.62a-93
2G7	Lampholder	7005-102-1	C81.62g-97
2GX7	Lampholder	7005-103-1	C81.62g-97
GU7	Lampholder	7005-113-1	C81.62ss1-99
G/GX7.9	Lampholders	2-356-1	C81.62-91
G9.5	Lampholders	2-368-1	C81.62-91
GY/GZ9.5	Lampholders	2-369-1	C81.62-91
G10q	Four-Pin Lampholder for Circular Fluorescent Lamps	2-383-2	C81.62q-97
2G11	Lampholders	7005-82-2	C81.62g-97
G12	Lampholder	7005-63-1	C81.62g-97
G13	Medium Bi-Pin Fluorescent Lampholder	2-406-1	C81.62-91
2G13	U-Shaped Fluorescent Lampholder	2-420-2	C81.62s-98
G16d	Mogul End-Prong Connector	2-430-2	C81.62n-97
G/GX17q	Four-Pin Prefocus Lampholders	2-440-1	C81.62-91
G20	Mogul Bi-Pin Fluorescent Lampholder	2-452-1	C81.62-91
G22	Medium Bipost lampholder	2-466-1	C81.62-91
G23	Lampholder	7005-69-2	C81.62g-97
GX23	Lampholder	7005-86-1	C81.62g-97
G/GX/GY24	Lampholders	7005-78-3	C81.62g-97
G/GX/GY32	Lampholders	7005-87-3	C81.62g-97
G38	Mogul Bipost Lampholder	2-519-1	C81.62-91
P8.25d	Lampholder	2-530-2	C81.62d-95
PG/PGX12	Lampholders	7005-64-2	C81.62g-97
P12.4d	Lampholder	2-550-1	C81.62c-95

Copyright National Electrical Manufacturers Association
Provided by IHS under license with NEMA
No reproduction or networking permitted without license from IHS
Not for Resale

Universal Contents of C81.62 Lampholders for Electric Lamps

System	Title	Std. Sheet No.	Published In
P12.4	Lampholder	2-555-1	C81.62d-95
P28	Medium Prefocus Lampholder	2-700-1	C81.62-91
P30	Candelabra Prefocus Lampholders	2-709-1	C81.62-91
P40	Mogul Prefocus Lampholder	2-715-1	C81.62-91
R7s	Recessed Single-Contact Lampholder	2-770-1	C81.62-91
R17d	Recessed Double-Contact Lampholder	2-777-2	C81.62r-98
SX4	Submidget Flanged Lampholder	2-850-1	C81.62-91
S14	Lampholder	7005-112-1	C81.62t-99
W2.5x16	Lampholder	7005-104-1	C81.62u-98
	Fluorescent Lamp Starter Holder	2-900-1	C81.62-91
	"Uno" Thread Form for Medium Screw Lampholders	4-2-1	C81.62m-98
	Electrolier Size Metal Shell for Medium Screw Lampholders	4-5-1	C81.62m-98
	Electrolier Size Metal Cap for Medium Screw Lampholders	4-6-1	C81.62m-98

Copyright National Electrical Manufacturers Association
Provided by IHS under license with NEMA
No reproduction or networking permitted without license from IHS
Not for Resale

BA9 Miniature Bayonet Lampholder

The designation assigned in accordance with the system of International Electrotechnical Commission (IEC) is BA9. This standard is equivalent to IEC 60061.

The drawing is intended only to indicate the dimensions to be controlled.

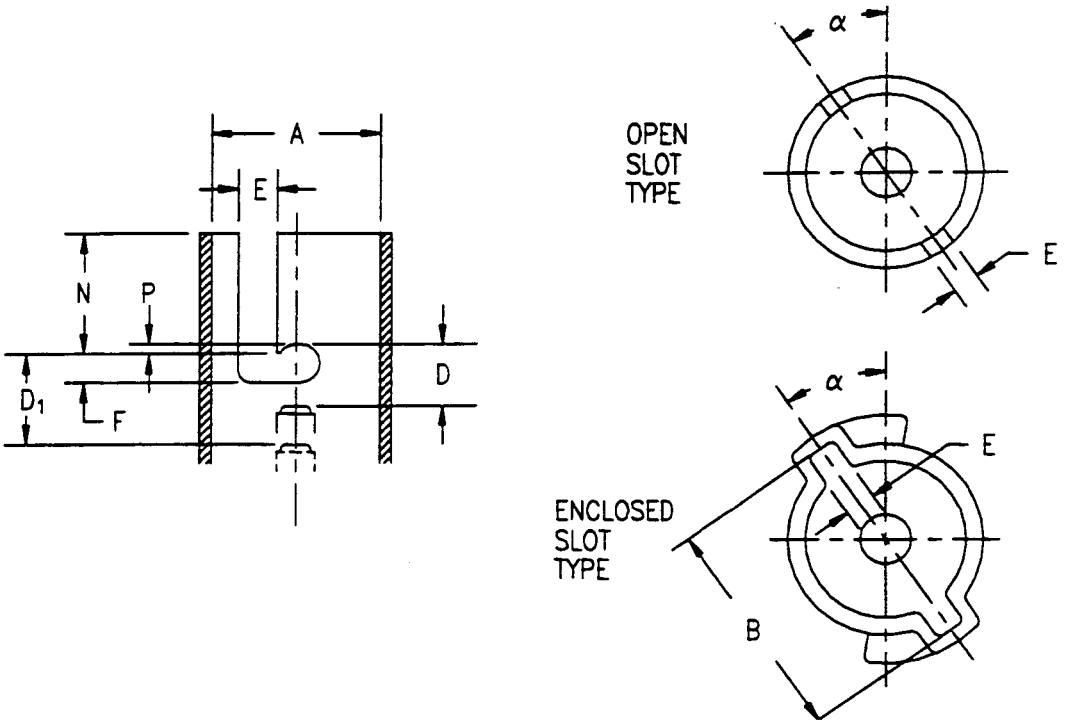

	Standard Dimensions (millimeters)		Nearest Equivalent (inches)	
Reference	Min.	Max.	Min.	Max.
A	9.32	9.44	0.367	0.372
B	11.05	–	0.435	–
D (Note 1)**	–	3.8	–	0.150
D_1	6.65	–	0.262	–
E (Note 1)**	2.2	–	0.087	–
F	2.2	–	0.087	–
N	–	4.4	–	0.173
P	0.5	–	0.020	–
α	28° Nominal		28° Nominal	

**Note 1: These values have been rounded down by 0.01mm to agree with international standards.

Copyright © 1998 by National Electrical Manufacturers Association
1300 North 17th Street, Suite 1847, Rosslyn, VA 22209

First Edition
February 1999

Copyright National Electrical Manufacturers Association
Provided by IHS under license with NEMA
No reproduction or networking permitted without license from IHS
Not for Resale

GAUGING

The minimum retention gauge, 3-14, shall enter the Lampholder and rotate until seated. The gauge pins shall be retained by the holder-retaining slots.

Lampholders are required to exert a minimum bulb contact pressure of 3.0N, when measured with a minimum bulb base or gauging designed to meet minimum bulb base specifications.

The maximum retention gauge, 3-14, shall enter the Lampholder with a maximum force of 40N, and shall rotate until seated with a maximum torque of 0.3Nm.

See ANSI C81.63 for gauges.

BASE

See ANSI C81.61, Standard Sheet 1-10.

Copyright © 1998 by National Electrical Manufacturers Association
1300 North 17th Street, Suite 1847, Rosslyn, VA 22209

First Edition
February 1999

Copyright National Electrical Manufacturers Association
Provided by IHS under license with NEMA
No reproduction or networking permitted without license from IHS
Not for Resale

BA15, BAY15, and BAZ15 Candelabra Bayonet Lampholders

The designations assigned to these lampholders by the International Electrotechnical Commission (IEC) are BA15, BAY15, and BAZ15.

These lampholders are very similar to, but not completely identical with the lampholders in IEC Publication 61. In the United States they are used for both automotive and nonautomotive applications.

The drawing is intended only to indicate the dimensions to be controlled.

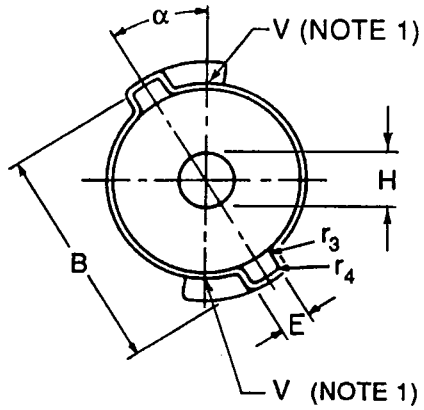

BA15s

Also shows top view of BAY15s (enclosed "J" slot shown)

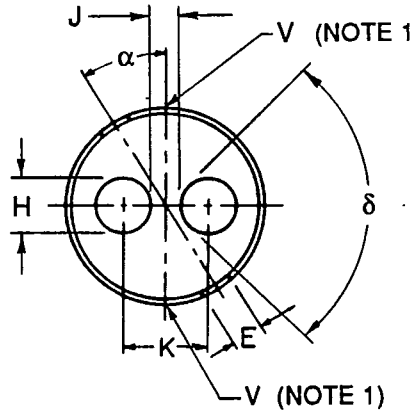

BAY15d

Also shows top view of BA15d (open "J" slot shown)

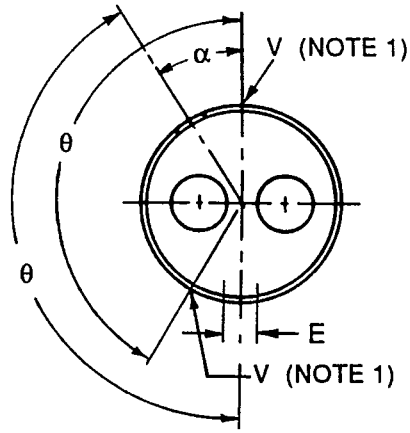

BAZ15D

(open "J" slot shown)

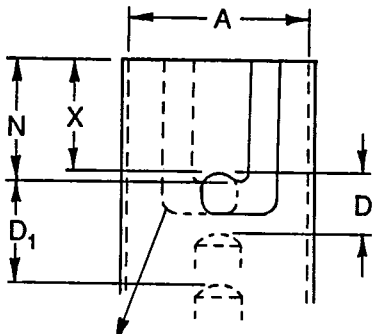

BA15s

Slot positioning applies to BA15d also

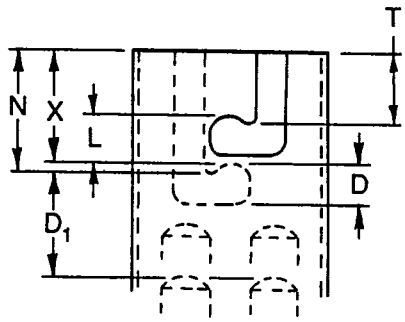

BAY15d

Slot positioning applies to BA15s also

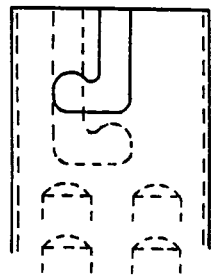

BAZ15d

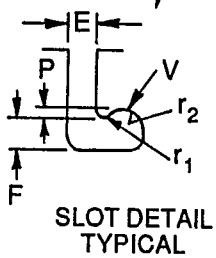

SLOT DETAIL TYPICAL

Copyright National Electrical Manufacturers Association
Provided by IHS under license with NEMA
No reproduction or networking permitted without license from IHS
Not for Resale

ANSI C81.62-1991
Std Sheet 2-20-1

Reference	Standard dimensions in			Nearest metric equivalent mm		
	Min	Nom	Max	Min	Nom	Max
A	0.6045	–	0.609	15.33	–	15.47
B	0.670	–	–	17.02	–	–
D	–	–	0.217	–	–	5.50
D_1	0.325	–	–	8.25	–	–
E (Note 2)	0.106	–	0.126	2.70	–	3.20
F	0.106	–	–	2.70	–	–
H (Note 3)	0.096	–	–	2.50	–	–
J (Note 4)	0.047	–	–	1.20	–	–
K (Note 3)	0.272	–	0.290	6.90	–	7.36
L	0.122	–	0.130	3.10	–	3.30
N	–	–	0.343	–	–	8.70
P	0.030	–	–	0.75	–	–
T	–	–	0.209	–	–	5.30
X (Note 5)	0.283	–	–	7.20	–	–
r_1*	–	–	0.093	–	–	2.36
r_2*	–	0.030	–	–	0.75	–
r_3* (Note 6)	–	–	0.050	–	–	1.27
r_4* (Note 6)	–	–	0.030	–	–	0.76
α (degrees)	–	29°	–	–	–	–
δ (degrees)	–	45°	–	–	–	–
θ (degrees)	–	150°	–	–	–	–

NOTES

1 Point V denotes the resting point of base pins. For BA15 lampholders intended for optical control, the difference in heights between the two resting points "V" shall not exceed 0.2 mm (0.008 in).

2 Other slots or recesses in the holder barrel are permissible if their width is less than 1.8 mm (0.070 in).

3 Dimensions H and K refer to the contact face of plunger contacts only.

4 Lampholders intended for use at 100 V and above shall provide a spacing of not less than 1.2 mm (0.047 in) between the two contacts, and between the contacts and the shell of the lampholder.

5 Dimension X applies to lampholders intended for optical control. A value of 5.00 mm (0.197 in) is under consideration for other applications.

6 This dimension applies to enclosed "J" slots only.

7 This dimension applies to lampholders accepting bases with circular contacts only. For lampholders accepting bases with oval shaped contacts only, this dimension is 30° nominal.

* These dimensions are for lampholder design and are not to be gauged.

Copyright National Electrical Manufacturers Association
Provided by IHS under license with NEMA
No reproduction or networking permitted without license from IHS
Not for Resale

General requirements
Contacts shall be so designed and spaced that they will not short to each other or to the shell when a lamp is being inserted or removed from the lampholder. Special attention should be given to Note 7 and the fact that some base eyelets or solder contacts may not be of a circular cross-section.

Contact types other than plungers may be suitable.

Slots
This standard covers complete "J" slots only. The slots may be either enclosed or open.

Testing
The following requirements are under consideration.

The forces required to depress each contact individually to positions of 6.32 mm (0.25 in) and 7.50 mm (0.30 in) beyond the horizontal plane through the resting point(s) "V" (the resting point of the reference notch in the case of BAY15 and BAZ15 holders) shall be not less than 5 N 22.5 lb × f and not more than 20 N 90 lb × f, respectively (not more than 10 N 45 lb × f for plunger contacts in BA15d, BAY15d, and BAZ15d lampholders). The contact positions specified correspond with those resulting from the fitting of bases of which the values of dimension D_1 are minimum and maximum respectively.

Gauging
In certain designs of lampholders, the inside diameter of the shell can be accurately checked only with the lampholder mounted in the fixture in which it is to be used.

"Go" Gauge 3-24: This gauge shall enter the lampholder when a reasonable amount of force is applied. "Not-go" Gauge 3-24: This gauge shall not enter the lampholder.

See ANSI C81.63 for gauges.

Base
See ANSI C81.61, Standard Sheet 1-20.

Copyright National Electrical Manufacturers Association
Provided by IHS under license with NEMA
No reproduction or networking permitted without license from IHS
Not for Resale

61-2M © CEI/IEC 1994

BAYONET LAMPHOLDERS

DOUILLES A BAIONNETTE

BY22d

Dimensions in millimetres - Dimensions en millimètres

The drawing is intended only to illustrate the dimensions essential for interchangeability.
Le dessin a pour seul but d'illustrer les dimensions essentielles pour l'interchangeabilité.

For details of cap BY22d, see sheet 7004-17.
Pour les détails du culot BY22d, voir feuille 7004-17.

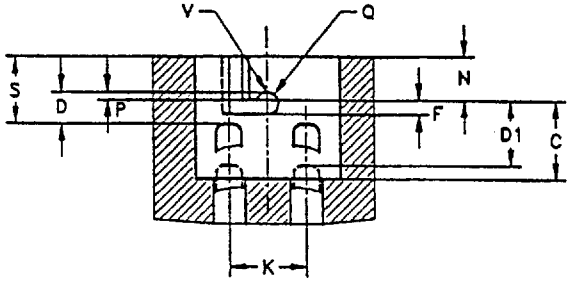

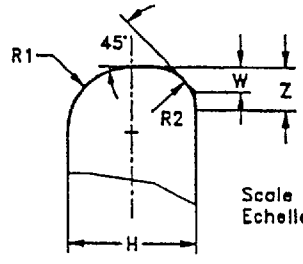

Scale 5:1
Echelle 5:1

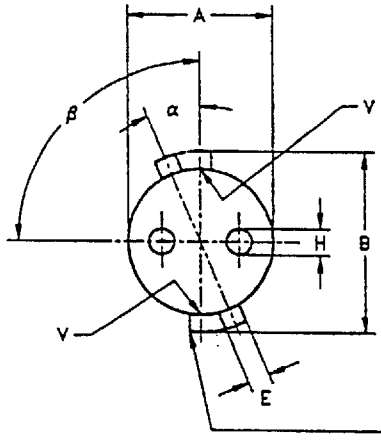

Min profile Max profile

EXTREME PLUNGER PROFILES
(Piston-type only)

PROFILES-LIMITE DES CONTACTS
(Du type à piston plongeur)

V = Resting point of cap pin
V = Point de repos de l'ergot du culot

Contour of free space for cap pins
Limite de l'espace libre destiné aux ergots du culot

Scale 4:1
Echelle 4:1

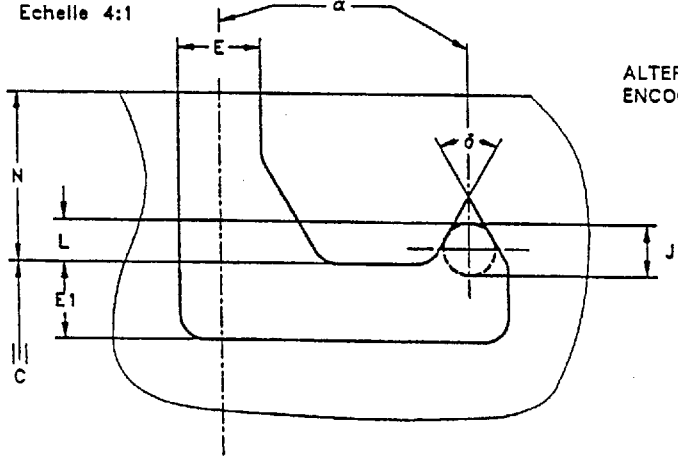

ALTERNATIVE SLOT
ENCOCHE ALTERNATIVE

Copyright National Electrical Manufacturers Association
Provided by IHS under license with NEMA
No reproduction or networking permitted without license from IHS
Not for Resale

BAYONET LAMPHOLDERS

DOUILLES A BAIONNETTE

BY22d

Dimensions in millimetres - Dimensions en millimètres

Dimension	Min.	Max.
A (3)	22,3	23,0
B	27,77 (3)	-
C	10,5 (3)	-
D	-	4,9 (4)
D1	9,5 (3)	-
E (5)	2,7	3,8
E1	2,7	-
F	2,7 (5)	-
H (1)	3,5	-
J	2°	
K	10,5	13,2
L	1,6	

Dimension	Min.	Max.
N	-	6,5 (3)
P	0,9	1,3
Q	E/2	
R1	H/2	
R2	Z	
S (2)	8,0	-
W	Approx. 1,0	
Z	1,3	-
α	20°	37°
ß	82°30'	97°30'
δ	60°°	

• These dimensions are for holder design only and are not to be gauged.
• Ces dimensions s'appliquent seulement à la construction de la douille et n'ont pas à être vérifiées.

(1) Dimension H refers to the diameter of plunger contacts only.
(2) Holders shall be so designed that there is no risk of electrical contact with, or short-circuit between, the holder contacts by the shell of the B22°° lamp cap when an attempt is made to insert this at an angle to the axis of the holder.
This may be achieved in either of the following ways:
a) By observing the limit for dimension S at a sufficient number of points around the perimeter of the holder bore.
b) By the provision of a skirt or similar device to limit the degree of possible skewness during insertion of a lamp.
(3) To be checked by means of the gauge shown on sheet 7006-17B.
(4) To be checked by means of the gauge shown on sheet 7006-15A.
(5) To be checked by means of the gauge shown on sheet 7006-13.

Note - Special attention is drawn to the use of the gauge shown on sheet 7006-12A.

°° Reference is made to B22 caps, as such caps - with a metal shell - can be inserted in these holders.
BY22d caps have "shells" made from insulating material.

(1) La dimension H correspond au diamètre pour les seuls contacts par plongeur.
(2) Les douilles doivent être conçues de telle sorte que lors de l'insertion de la lampe en position inclinée par rapport à l'axe de la douille, il n'y ait pas de risque de contact électrique avec/ou des courts-circuits entre les contacts de la douille et la chemise du culot B22°°.
Cela peut être obtenu par l'un des moyens suivants:
a) En respectant la dimension limite S en un nombre de points suffisants le long du périmètre du corps de la douille.
b) En prévoyant une jupe ou un dispositif analogue pour limiter l'inclinaison possible durant l'insertion de la lampe.
(3) A vérifier au moyen du calibre indiqué sur la feuille 7006-17B.
(4) A vérifier au moyen du calibre indiqué ssur la feuille 7006-15A.
(5) A vérifier au moyen du calibre indiqué sur la feuille 7006-13.

Note - Prêter attention spéciale à l'ernploi du calibre indiqué sur la feuille 7006-12A.

°° Il est tenu compte que les culots B22 - avec chemise métallique - peuvent être insérés dans ces douilles.
Les culots BY22d ont des "chemises" en matière isolante.

GAUGING: Lampholders BY22d shall fulfil the tests of the gauges shown on sheets 7006-12A, 7006-13, 7006-15A and 7006-17B.

VERIFICATION: Les douilles BY22d doivent satisfaire aux essais avec les calibres selon les feuilles 7006-12A, 7006-13, 7006-15A et 7006-17B.

Copyright National Electrical Manufacturers Association
Provided by IHS under license with NEMA
No reproduction or networking permitted without license from IHS
Not for Resale

BAYONET LAMPHOLDERS

DOUILLES A BAIONNETTE

BY22d

Dimensions in millimetres - Dimensions en millimètres

The contact-making surfaces shall be smooth and so shaped at their edges that they do not prevent easy insertion and removal of a corresponding lamp.

Where piston-type cylindrical plungers are used, the following particular requirements shall apply:

a) The contact face of the plunger shall be flat or convex; it shall not be concave. The contact-making surface shall be free from burrs or other sharp projections.
b) The transition of the contact-making surface to the cylindrical diameter of the plunger shall be rounded or chamfered in accordance with the values given in the table.
c) The extreme profile of the plunger face may be hemispherical.

The forces required to depress each contact individually to positions of 7,5 mm* and 9,0 mm* beyond the plane through the resting points "V", shall be not less than 5 N and not more than 20 N respectively.
To be checked by means of the gauge shown on sheet 7006-15A.

For long lamps where extra stability is required, additional support devices may be determined in reference to the dimensions shown in the lamp data sheet in the appropriate IEC Publication.

* These contact positions correspond with those resulting from the fitting of caps of which the values of dimension D1 are minimum and maximum respectively.

Les surfaces de contact doivent être lisses et de forme telle que leurs bords ne gênent pas l'insertion et le retrait des lampes correspondantes.

Si les contacts sont du type à piston plongeur cylindrique, les presciptions particulières suivantes sont applicables:

a) La surface de contact du piston doit être plate ou convexe; elle ne doit pas être concave. La surface de contact ne doit pas présenter de bavures ou de parties saillantes.
b) Le passage de la surface de contact à la partie cylindrique du piston doit être arrondi ou chanfreiné conformément aux valeurs indiquées dans le tableau.
c) Le profil-limite de la force de contact peut être hémisphérique.

Les forces nécessaires pour enfoncer individuellement chaque contact à partir des positions situées à 7,5 mm* et 9,0 mm* au-delà du plan passant par les points de repos "V" ne doivent pas être respectivement inférieures à 5 N et supérieures à 20 N.
Ceci sera vérifié en utilisant le calibre indiqué sur la feuille 7006-15A.

Pour les lampes de grande longueur pour lesquelles une stabilité particulière est exigée, les dispositifs supplémentaires de tenue de la lampe peuvent être déterminés en tenant compte des dimensions portées sur la feuille des caractéristiques de la lampe, incorporée dans la publication correspondante de la CEI.

* Ces positions de contact correspondent avec celles qui résultent de l'introduction du culot pour lequel les valeurs de la dimension D1 sont respectivement minimum et maximum.

Copyright National Electrical Manufacturers Association
Provided by IHS under license with NEMA
No reproduction or networking permitted without license from IHS
Not for Resale

E5 Midget Screw Lampholder

The designation assigned to this lampholder by the International Electrotechnical Commission (IEC) is E5.

This standard sheet is nearly equivalent to IEC Publication 61.

The drawing is intended only to indicate the dimensions to be controlled.

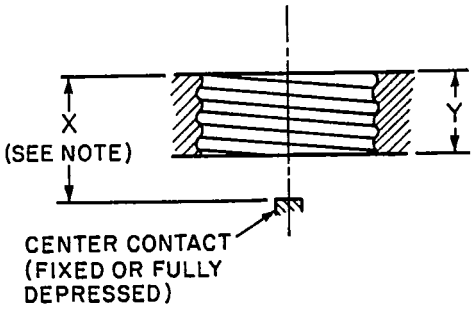

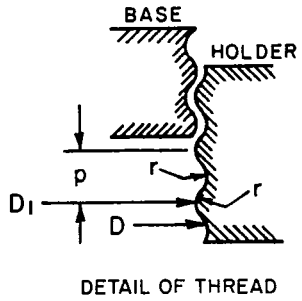

DETAIL OF THREAD

Reference	Standard dimensions in		Nearest metric equivalent mm	
	Min	Max	Min	Max
D	0.212	0.216	5.38	5.49
D_1	0.190	0.194	4.83	4.93
X (See note)	0.191	0.211	4.85	5.36
Y	0.125	–	3.18	–

NOTE – The "X" dimension is measured to the top of the threaded portion of the shell.

Form of E5 midget screw threads

Threads per inch 25.4

Pitch of thread, p.....0.03937 in (1.000 mm)

Radius of thread, r.....0.0115 in (0.293 mm)

Direction of threads .....right hand

Copyright National Electrical Manufacturers Association
Provided by IHS under license with NEMA
No reproduction or networking permitted without license from IHS
Not for Resale

Gauging
Threaded "Go" Gauge 3-104: It shall be possible to screw this gauge in the lampholder smoothly. When fully inserted, the rim of the screw shell of the lampholder shall be coplanar with or project beyond surface Y1, but it shall not project beyond surface Y2.

Threaded "Not-go" Gauge 3-105: This gauge shall not enter the lampholder, by its own mass, so far that the thread protrudes beyond surface T.

See ANSI C81.63 for gauges.

Base
See ANSI C81.61, Standard Sheet 1-100

Copyright National Electrical Manufacturers Association
Provided by IHS under license with NEMA
No reproduction or networking permitted without license from IHS
Not for Resale

E10 Miniature Screw Lampholder

The designation assigned to this lampholder by the International Electrotechnical Commission (IEC) is E10.

At the time of publication there was no equivalent IEC standard.

The drawing is intended only to indicate the dimensions to be controlled.

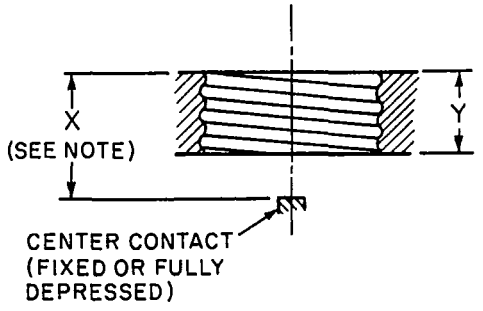

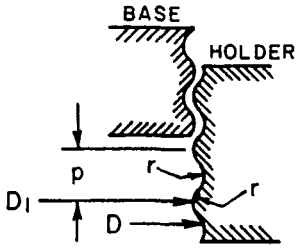

DETAIL OF THREAD

Reference	Standard dimensions in		Nearest metric equivalent mm	
	Min	**Max**	**Min**	**Max**
D	0.3775	0.3835	9.59	9.74
D_1	0.3375	0.3435	8.57	8.72
X (See note)	0.272	0.311	6.9	7.9
Y	0.145	–	3.68	–

NOTE – The "X" dimension is measured to the top of the threaded portion of the shell.

Form of E10 miniature screw threads

Threads per inch 14

Pitch of thread, p.....0.07143 in (1.814 mm)

Radius of thread, r.....0.0210 in (0.533 mm)

Direction of threads .....right hand

Copyright National Electrical Manufacturers Association
Provided by IHS under license with NEMA
No reproduction or networking permitted without license from IHS
Not for Resale

Gauging

Threaded "Go" Gauge 3-115: It shall be possible to screw this gauge into a lampholder smoothly. When fully inserted, the rim of the screw shell of the lampholder shall be coplaner with or project beyond surface Y_1, but shall not project beyond surface Y_2.

"Not-go" Plug Gauge 3-116: This gauge shall not enter a lampholder, by its own mass, so far that the threads protrude beyond surface T.

Threaded Gauge for Testing Contact-making, Gauge 3-117: When gauge 3-117 has been fully screwed into a holder, the gauge indicator lamp (IL) shall light.

When gauge 3-117 is fully seated, there shall be a clearance between the gauge and the upper edge of the lampholder if the lampholder is made of ceramic or other material that may scratch a glass bulb. This clearance may be verified by the use of a feeler gauge, 0.002 in (0.05 mm) thick and 0.125 in (3.18 mm) wide.

See ANSI C81.63 for gauges.

Base

See ANSI C81.61, Standard Sheet 1-111.

Copyright National Electrical Manufacturers Association
Provided by IHS under license with NEMA
No reproduction or networking permitted without license from IHS
Not for Resale

E11 Mini-Can Screw Lampholder

The designation assigned to this lampholder by the International Electrotechnical Commission (IEC) is E11. This standard is fully compatible with IEC 61.

The drawing is intended only to indicate the dimensions to be controlled.

Copyright National Electrical Manufacturers Association
Provided by IHS under license with NEMA
No reproduction or networking permitted without license from IHS
Not for Resale

Reference	Standard Dimensions (inches)		Nearest Metric Equivalent (millimeters)	
	Min.	Max.	Min.	Max.
A (Note 3)	–	0.545	–	13.84
A_1 (Note 3)	0.616	–	15.65	–
D	0.4275	0.4335	10.86	11.01
D_1	0.3875	0.3935	9.84	9.99
E (Note 3)	0.163	0.228	4.14	5.79
G_1 (Note 3)	0.026	–	0.66	–
J (Notes 1, 3)	–	0.062	–	1.57
K (Notes 3, 4)	0.416	–	10.57	–
L (Notes 3, 5)	0.368	0.415	9.35	10.54
M	0.467	–	11.86	–
N (Note 3)	0.430	–	10.92	–
$\alpha°$ (Note 1)	44° 30'	45° 30'	44° 30'	45° 30'

NOTES
1 No portion of the lampholder may extend above the limit established by dimension J.
2 The screw shell of the holder shall have sufficient lateral movement to permit the conical surface of the base to always seat on the corresponding surface of the holder.
3 Dimensions A, A_1, E, G_1, J, K, L, and N are measured from the "Ref. Dia." of 0.531-inch (13.49mm).
4 Dimension K indicates the minimum length over which clearance for the lamp base must be provided (see dimension N).
5 The length defined by dimension L minus dimension E determines the number of available threads of the lampholder cavity.
6 Dimension r, which is derived from the theoretical thread profile, is not to be checked on the base. The metric equivalent differs slightly from the direct English/metric conversion when dimension r is calculated in the metric system.

Form of Mini-Can Screw Threads

Threads per inch	14
Pitch of thread, *p*	0.0714 inch (1.814mm)
Radius of thread, *r* (Note 6)	0.021 inch (0.531mm)
Direction of threads	right hand

Copyright National Electrical Manufacturers Association
Provided by IHS under license with NEMA
No reproduction or networking permitted without license from IHS
Not for Resale

Gauging

"Go" and contact-making gauge "A" 3-125: It shall be possible to screw the gauge into a lampholder smoothly. When the gauge is inserted as far as it will go, the sloping shoulder of the gauge shall seat against the tapered surface of the lampholder and the holder shall not project above the top surface of the gauge. Under these conditions the indicator lamp (IL) shown in the test circuit shall light.

The torque required to seat the gauge shall not exceed 4-inch pounds (0.45 newton-meter).

"Go" and contact-making gauge "B" 3-124. It shall be possible to screw the gauge into a lampholder smoothly. When the gauge is inserted as far as it will go, the sloping shoulder of the gauge shall seat against the tapered surface of the lampholder and the indicator lamp (IL) shown in the test circuit shall light.

The torque required to seat the gauge shall not exceed 4-inch pounds (0.45 newton meter).

See ANSI C81-63 for gauges.

Copyright National Electrical Manufacturers Association
Provided by IHS under license with NEMA
No reproduction or networking permitted without license from IHS
Not for Resale

E12 Candelabra Screw Lampholder

The designation assigned to this lampholder in accordance with the coding system of the International Electrotechnical Commission (IEC) is E12.

At the time of issuance of this standard, there was no comparable IEC standard in existence.

The drawing is intended only to indicate the dimensions to be controlled.

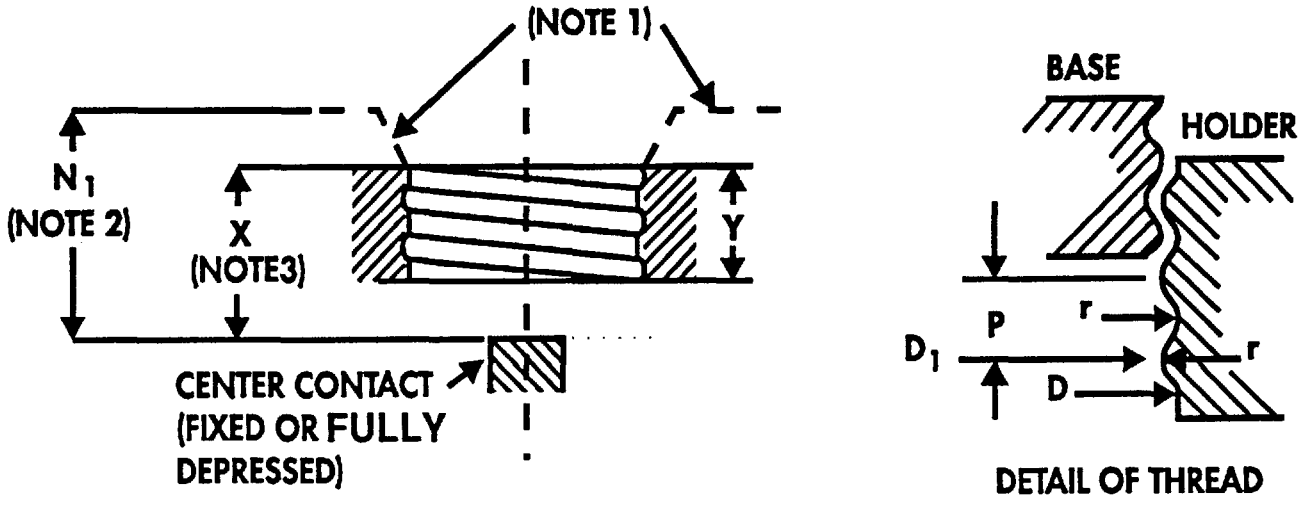

Reference	Standard Dimensions (inches)		Nearest Metric Equivalent (millimeters)	
	Min	Max.	Min	Max.
D	0.470	0.476	11.94	12.09
D_1	0.420	0.426	10.67	10.82
N_1	0.625	0.687	15.88	17.45
X	0.375	0.440	9.53	11.17
Y	0.200	—	5.08	—

NOTES:

(1) Limits of insulation shoulder as determined by contact-making gauge in ANSI C81.63 Standard Sheet 3-138

(2) Dimension N_1 defines the depth of the holder cavity, measured from the plane of the depressed center contact to the rim of the insulating liner or outer body, if made of insulating material. N_1 max does not apply if the insulating material outer body is flared and extends beyond the specified limit to provide further protection. For further details, see American National Safety Standard for Edison-Base Lampholders ANSI/UL 496-1986.

(3) Dimension X is measured from the fixed or fully depressed central contact to the top of the threaded part of the lampholder. It is not essential that the whole or any part of the holder-screw be used as an electrical contact.

(4) Future objective: Holders made in some countries can exhibit X dimensions as high as 0.453 inch (11.5 mm). Lamps with E12 bases, having an actual thread penetration dimension T_1 less than 0.453 inch (11.5 mm) may incur contact-making problems until changes to the holder can be completed.

(5) Dimension r, which is derived from the theoretical thread profile, is not to be checked on the lampholder.

(6) The metric equivalents for dimension D min and D_1 min are rounded upwards to achieve better international harmonization.

Form of E12 Candelabra Screw Threads	
Threads per inch	10
Pitch of thread, *p*	0.1000 inch (2.540 mm)
Radius of thread, *r*	0.0312 inch (0.792 mm)
Direction of threads	Right hand

Copyright National Electrical Manufacturers Association
Provided by IHS under license with NEMA
No reproduction or networking permitted without license from IHS
Not for Resale

Gauging

Threaded "Go" Gauge 3-136: It shall be possible to screw gauge 3-136 into a lampholder smoothly. When the gauge is fully seated, the threaded portion of the holder shall be coplanar with or project beyond gauge surface Y_1, but shall not project beyond surface Y_2.

Note that the surface Y_1-Y_2 test is not intended to apply to lampholders where the metal screw shell extends beyond the end of the effective thread and where the end of the screw shell is shielded by insulation.

"Not-go" Plug Gauge 3-137: This gauge shall not enter a lampholder, by its own mass, so far that the holder thread protrudes beyond gauge surface T.

Threaded Gauge for Testing Contact-making, Gauge 3-138: When gauge 3-138 has been fully screwed into a holder, the gauge's indicator lamp (IL) shall light.

When the 3-138 gauge is fully seated, there shall be a clearance between the gauge and the upper edge of the lampholder, if the lampholder is made of ceramic or other material that may scratch a glass bulb. This clearance may be verified by the use of a feeler gauge 0.002 inch (0.05 mm) thick and 0.125 inch (3.18 mm) wide.

See ANSI C81.63 for gauges.

Base

See ANSI C81.61, Standard Sheet 1-131.

Copyright National Electrical Manufacturers Association
Provided by IHS under license with NEMA
No reproduction or networking permitted without license from IHS
Not for Resale

POSITION OF HOLDER THREAD IN RELATION TO CENTRAL CONTACT OF THE EDISON LAMPHOLDER

POSITION DE LA CHEMISE FILETEE DE LA DOUILLE EDISON PAR RAPPORT AU CONTACT CENTRAL

Dimensions in millimetres - Dimensions en millimètres

The drawing is intended only to illustrate the dimensions essential for interchangeability.
Le dessin a pour seul but d'illustrer les dimensions essentielles pour l'interchangeabilité.

For details of caps E5, E10, E14, E17, E26, E27 and E40 see sheets 7004-25, 7004-22, 7004-23, 7004-26, 7004-21A, 7004-21 and 7004-24 respectively.
Pour les détails des culots E5, E10, E14, E17, E26, E27 et E40 , voir les feuilles 7004-25, 7004-22, 7004-23, 7004-26, 7004-21A, 7004-21 et 7004-24 respectivement.

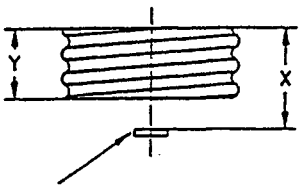

Position of the central contact when the lamp is fully inserted
Position du contact central lorsque la lampe est complètement introduite

The holder shell shall be positioned in the lampholder so as to conform with dimension X when the lamp is fully inserted.

La chemise filetée de la douille doit être placée de façon à respecter la dimension X lorsque la lampe est complètement introduite.

(1) Unless stated otherwise, this dimension is checked with a millimetre scale.
(2) For holders intended for lamps equipped with cap E10/12, the value of Xmax is decreased to 8,4 mm.
(3) To be checked by means of the gauge shown on sheet 7006-25B.
(4) To be checked by means of the gauge shown on sheet 7006-25A.
(5) To be checked by means of the gauge shown on sheet 7006-25.

(1) Sauf spécification contraire, cette dimension est vérifiée avec une règle millimétrée.
(2) La valeur Xmax est réduite à 8,4 mm pour les douilles destinées aux lampes munies du culot E10/12.
(3) A vérifier au moyen du calibre selon la feuille 7006-25B.
(4) A vérifier au moyen du calibre selon la feuille 7006-25A.
(5) A vérifier au moyen du calibre selon la feuille 7006-25.

Type	Standard dimensions Dimensions normalisées			Nearest equivalents in inches Equivalents arrondis en pouces		
	X (1)		Y (1)	X (1)		Y (1)
	Min.	Max.	Min.	Min.	Max.	Min.
E5	4,5	5,3	--	--	--	--
E10 (2)	7,5 (5)	9,3 (5)	--	--	--	--
E14	12 (5)	15 (5)	5	--	--	--
E17	12	14	5,64	0,472	0,551	0,222
E26	17,07 (3)	19,05 (3)	7	0,672 (3)	0,750 (3)	0,276
E27	17 (4)	21 (4)	7	--	--	--
E40	27 (5)	32 (5)	12	--	--	--

Copyright National Electrical Manufacturers Association
Provided by IHS under license with NEMA
No reproduction or networking permitted without license from IHS
Not for Resale

E26 Single-Contact Medium Screw Lampholder

The designation assigned to this lampholder by the International Electrotechnical Commission (IEC) is E26.

This standard sheet is nearly equivalent to IEC Publication 61.

The drawing is intended only to indicate the dimensions to be controlled.

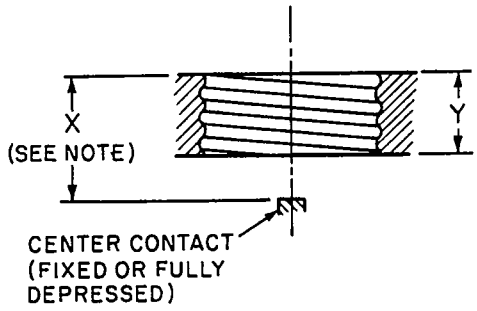

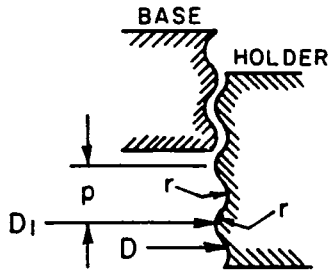

DETAIL OF THREAD

Reference	Standard dimensions in		Nearest metric equivalent mm	
	Min	Max	Min	Max
D	1.045	1.053	26.54	26.75
D_1	0.979	0.987	24.87	25.07
X (Note 1)	0.672	0.750	17.07	19.05
Y	0.276	–	7.00	–

NOTES

1 The X dimension is measured to the top of the threaded portion of the shell.

2 Right-hand thread shown.

Form of E26 medium screw threads

Threads per inch 7

Pitch of thread, p.....0.14286 in (3.629 mm)

Radius of thread, r.....0.0469 in (1.191 mm)

Direction of threads .....right hand or left hand

Copyright National Electrical Manufacturers Association
Provided by IHS under license with NEMA
No reproduction or networking permitted without license from IHS
Not for Resale

Gauging

Threaded "Go" Gauge 3-169: It shall be possible to screw gauge 3-169 into a lampholder smoothly. When the gauge is fully seated, the rim of the screw shell of the holder shall be coplanar with or project beyond surface Y_1, but shall not project beyond surface Y_2.

"Not-go" Plug Gauge 3-170: This gauge shall not enter a lampholder, by its own mass, so far that the thread protrudes beyond surface T.

Threaded Gauge for Testing Contact-making, Gauge 3-171: When the 3-171 gauge is fully seated in a lampholder, the indicator lamp in the test circuit shall light. In this position there shall be a clearance between the gauge and the upper edge of the lampholder, if the lampholder is made of ceramic or other material that may scratch a glass bulb. This clearance may be verified by the use of a feeler gauge 0.002 in (0.05 mm) thick and 0.125 in (3.18 mm) wide.

See ANSI C81.63 for gauges.

Base

See ANSI C81.61, Standard Sheet 1-157.

Copyright National Electrical Manufacturers Association
Provided by IHS under license with NEMA
No reproduction or networking permitted without license from IHS
Not for Resale

E26d Double-Contact Medium Screw Lampholder

The designation assigned to this lampholder by the International Electrotechnical Commission (IEC) is E26d.

This standard sheet is nearly equivalent to IEC publication 61.

The drawing is intended only to indicate the dimensions to be controlled.

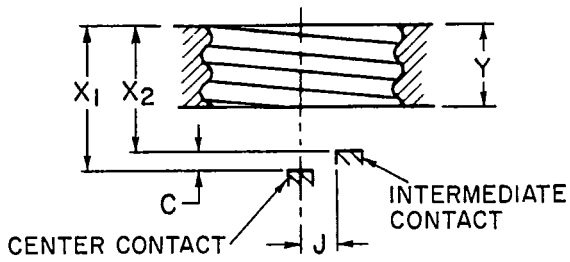

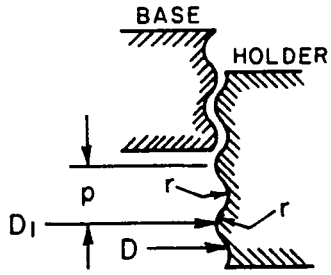

DETAIL OF THREAD

Reference	Standard dimensions in		Nearest metric equivalent mm	
	Min	Max	Min	Max
C	0.031	0.125	0.79	3.17
D	1.045	1.053	26.54	26.75
D_1	0.979	0.987	24.87	25.07
J	0.205	0.260	5.21	6.60
X_1	0.685	0.750	17.40	19.05
X_2	0.600	0.665	15.24	16.89
Y	0.276	–	7.00	–

NOTE – The center contact and intermediate contact shall not be of opposite polarity.

Form of E26d medium screw threads

Threads per inch 7

Pitch of thread, p.....0.14286 in (3.629 mm)

Radius of thread, r.....0.0469 in (1.191 mm)

Direction of threads .....right hand

Copyright National Electrical Manufacturers Association
Provided by IHS under license with NEMA
No reproduction or networking permitted without license from IHS
Not for Resale

Center and intermediate contacts
Either the center contact or the intermediate contact shall be capable of movement in an axial direction. It is also permissible for both of the contacts to be of a movable type.

In any lampholder these two contacts shall meet the following two requirements:

a) Either the center contact in its stationary or fully depressed position shall be within the limits given for X_1, or the intermediate contact in its stationary or fully depressed position shall be within the limits given for X_2.

b) When one of the two contacts has been found to comply with the preceding requirement, the other contact shall be capable of moving over the range indicated by dimension C (from C min to C max) with respect to the plane of the fully depressed position of the first contact.

Gauging
Threaded "Go" Gauge 3-174: It shall be possible to screw gauge 3-174 in a lampholder smoothly. When the gauge is fully seated, the rim of the screw shell of the holder shall be coplanar with or project beyond surface Y_1 but shall not project beyond Y_2.

Gauge for Checking Radial Position of the Intermediate Contact, Gauge 3-175: The projecting boss at the "Go" end of gauge 3-175 shall slip past the intermediate contact without interference. The projecting boss at the "Not-go" end shall not slip past the intermediate contact.

Threaded Contact Gauges 3-176 A and B: When gauges 3-176, A and B, in sequence, are fully screwed into a lampholder, the two indicator lamps (IL) shall light.

Threaded Gauge for Testing Contact-making, Gauge 3-177: For metal shell, paper-lined lampholders, the two indicator lamps (IL) shall light when gauge 3-177 has been fully inserted.

Plug Gauge for Testing Contact-making, Gauge 3-178: For porcelain or molded lampholders, the two indicator lamps (IL) shall light when gauge 3-178 has been fully inserted.

Threaded Gauge for Testing Undesireable Contact, gauge 3-179: When gauge 3-179 has been fully screwed into the holder, the indicator lamp shall remain unlit.

See ANSI C81.63 for gauges.

Base

See ANSI C81.61, Standard Sheet 1-158.

Copyright National Electrical Manufacturers Association
Provided by IHS under license with NEMA
No reproduction or networking permitted without license from IHS
Not for Resale

E39 Mogul Screw Lampholder

The designation assigned to this lampholder, in accordance with the coding system of the International Electrotechnical Commission (IEC), is E39.

At the time of issuance of this standard there was no comparable IEC standard in existence.

The drawing is intended only to indicate the dimensions to be controlled.

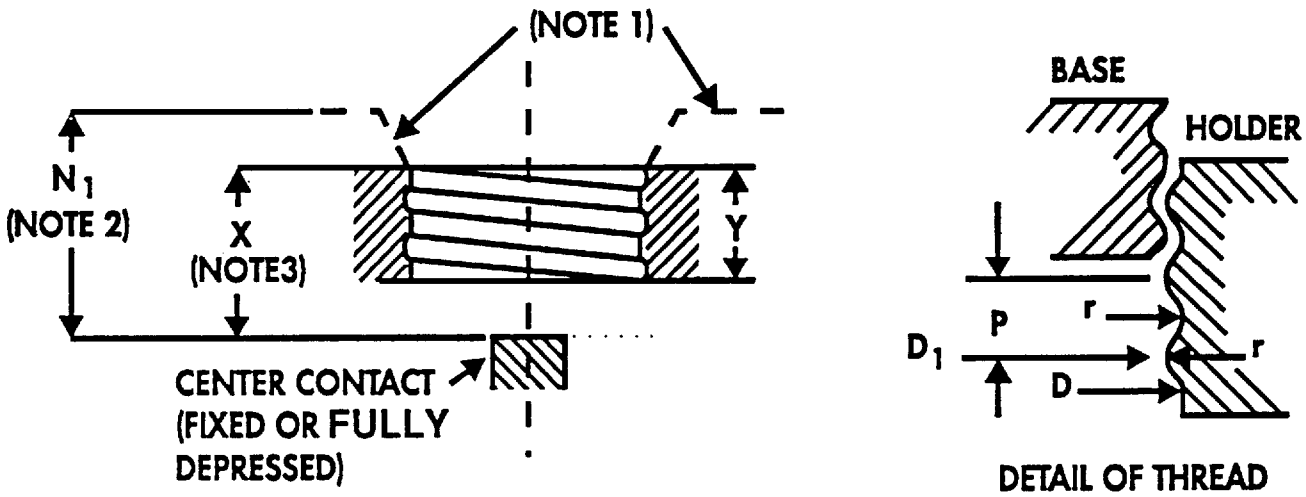

Reference	Standard Dimensions (inches)		Nearest Metric Equivalent (millimeters)	
	Min	Max.	Min	Max.
D (Note 4)	1.562	1.577	39.66	40.06
D_1 (Note 4)	1.462	1.477	37.12	37.52
N_1 (Note 2)	1.625	1.688	41.28	42.88
X (Note 3)	1.000	1.185	25.40	30.10
Y	0.500	—	12.70	—

NOTES:

(1) Limits of the insulation shoulder profile are determined by the Contact-making Gauge (see ANSI C81.63, Standard Sheet 3-192 for the details of the Contact-making Gauge).

(2) Dimension N_1, defines the depth of the holder cavity, measured from the plane of the depressed center contact to the plane of the rim of the insulating liner or outer body, if made of insulating material. N_1 max does not apply if the insulating material outer body is flared and extends beyond the specified limit to provide further protection. For further details, see American National Standard for Edison-Base Lampholders, ANSI/UL 496-1986.

(3) Dimension X is measured to the top of the threaded portion of the screw shell.

(4) For certain applications, such as roadway lighting, the lampholder may incorporate features that are designed to enhance gripping action on a lamp's base. Such features in the shell section are permitted to compromise the uniformity of dimensions D and D_1, subject to meeting gauging requirements.

Copyright National Electrical Manufacturers Association
Provided by IHS under license with NEMA
No reproduction or networking permitted without license from IHS
Not for Resale

Form of E39 Candelabra Screw Threads	
Threads per inch	4
Pitch of thread, *p*	0.25000 inch (6.350 mm)
Radius of thread, *r*	0.0906 inch (2.301 mm)
Direction of threads	Right hand

Gauging

Threaded "Go" Gauge 3-190: It shall be possible to screw gauge 3-190 into a lampholder smoothly. When the gauge is inserted as far as it will go, the threaded portion of the lampholder shall be coplanar with or project beyond gauge surface Y_1, but shall not project beyond surface Y_2.

"Not-go" Plug Gauge 3-191: This gauge shall not enter the screw thread of a lampholder, by its own mass, so far that the thread protrudes beyond surface T.

Threaded Gauge for Testing Contact-making, Gauge 3-192: When gauge 3-192 is fully seated in a lampholder, the gauge's indicator lamp (IL) shall light. In this position there shall be a clearance between the gauge and the upper edge of the holder, if the holder is made of ceramic or other material that may scratch a glass bulb. This clearance may be verified by the use of a feeler gauge 0.003 inch (0.08 mm) thick and 0.2 inch (5.0 mm) wide.

Lampholders with features that grip the threaded shell section of a lamp shall satisfy the following requirements under the prescribed conditions:

a. It shall be possible to screw the Maximum Torque Test Device, Gauge 3-195, into a lampholder. The applied torque shall not exceed 35 lb-in. (3.94 Newton-meters).

b. During removal of the Maximum Torque Test Device, the applied torque shall not exceed 35 lb-in. (3.94 Newton-meters).

c. Using the Minimum Torque Test Device, Gauge 3-196, the torque necessary for removal shall not be less than 8 lb-in. (0.90 Newton-meters).

See ANSI C81.63 for gauges.

Base

See ANSI C81.61, Standard Sheet 1-185.

Copyright National Electrical Manufacturers Association
Provided by IHS under license with NEMA
No reproduction or networking permitted without license from IHS
Not for Resale

E39d DOUBLE CONTACT MOGUL SCREW LAMPHOLDER

The designation assigned to this lampholder by the International Electrotechnical Commission (IEC) is E39d.

At the time of publication, there was no equivalent IEC standard.

The drawing is intended only to indicate the dimensions to be controlled.

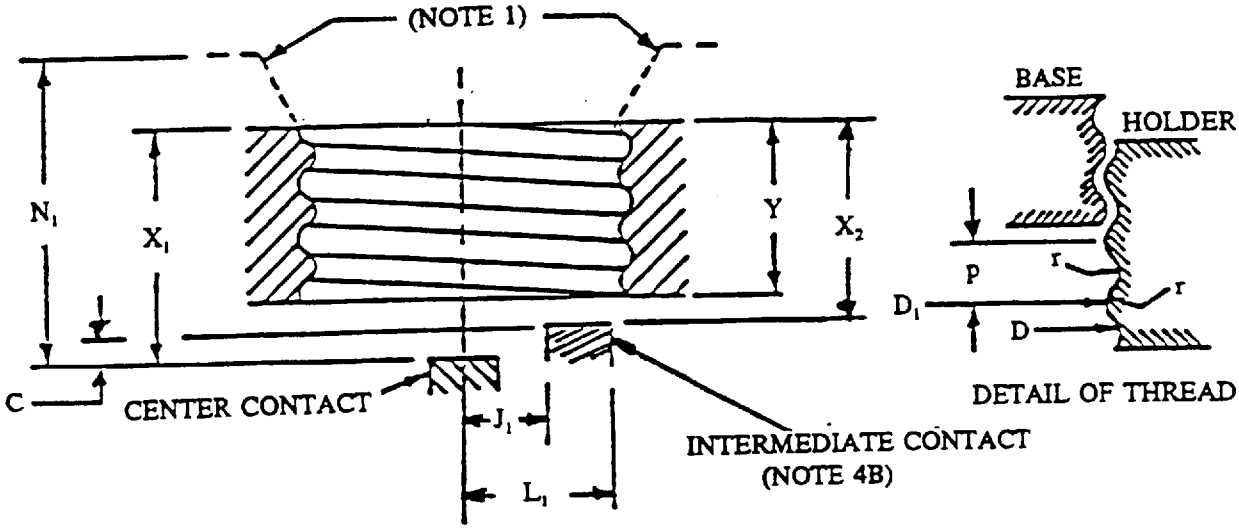

Copyright National Electrical Manufacturers Association
Provided by IHS under license with NEMA
No reproduction or networking permitted without license from IHS
Not for Resale

Reference	Standard dimensions (in.)		Nearest metric equivalent (mm)	
	Min	Max	Min	Max
C	0.062	0.188	1.57	4.77
D	1.565	1.577	39.75	40.06
D_1	1.465	1.477	37.21	37.52
J_1	0.310	—	7.87	—
L_1	—	0.443	—	11.25
N_1 (Note 2)	1.625	1.688	41.28	42.88
X_1 (Note 3,4)	1.000	1.185	25.40	30.10
X_2 (Note 3,4)	0.875	0.937	22.23	23.79

NOTES

1 Limits of the insulation shoulder profile are determined by the contact-making gage. See ANSI C81.63 Standard Sheet 3-192 for details of contact making gage.

2 Dimension N_1 defines the depth of the holder cavity, measured from the plane of the depressed center contact to the plane of the rim of the insulating liner or outer body, if made of insulating material. N_1 Max does not apply if the insulating material outer body is flared and extends beyond the specified limit to provide further protection. For further details, see ANSI/UL 496.

3 Dimensions X_1 and X_2 are measured to the top of the threaded portion of the screw shell.

4 Contacts.

a. The center and intermediate contacts shall not be of opposite polarity.

b. The contact configuration is optional, particularly the intermediate, which may be a "ring" shape.

c. Either the center or the intermediate contact shall be capable of movement in an axial direction. It is also permissible for both of the contacts to be of a movable type.

d. All 39d lampholders shall meet the following two requirements:

— Either the center contact in its stationary or fully depressed position shall be within the limits given for X_1, or the intermediate contact in its stationary or depressed position shall be within the limits for X_2.

— When one of the two contacts has been found to comply with the preceding requirement, the other contact shall be capable of moving over the range indicated by dimension C (from C Min. to C Max.) with respect to the plane of the fully depressed position of the first contact.

Copyright National Electrical Manufacturers Association
Provided by IHS under license with NEMA
No reproduction or networking permitted without license from IHS
Not for Resale

Form of E39 mogul screw threads

Threads per inch 4
Pitch of thread, *p* .....0.25000 in. (6.350 mm)
Radius of thread, *r* .....0.0906 in. (2.301 mm)
Direction of threads .....right hand

GAUGING

There are no standard gauges in existence or under consideration.

BASE

See ANSI C81.61, Standard Sheet 1-187.

Copyright National Electrical Manufacturers Association
Provided by IHS under license with NEMA
No reproduction or networking permitted without license from IHS
Not for Resale

EP39 Position-Oriented Mogul Screw Lampholder

The designation assigned to this lampholder in accordance with the coding system of the International Electrotechnical Commission (IEC) is EP39.

At the time of issuance of this standard, there was no comparable IEC standard in existence.

The drawing is intended only to indicate the dimensions to be controlled.

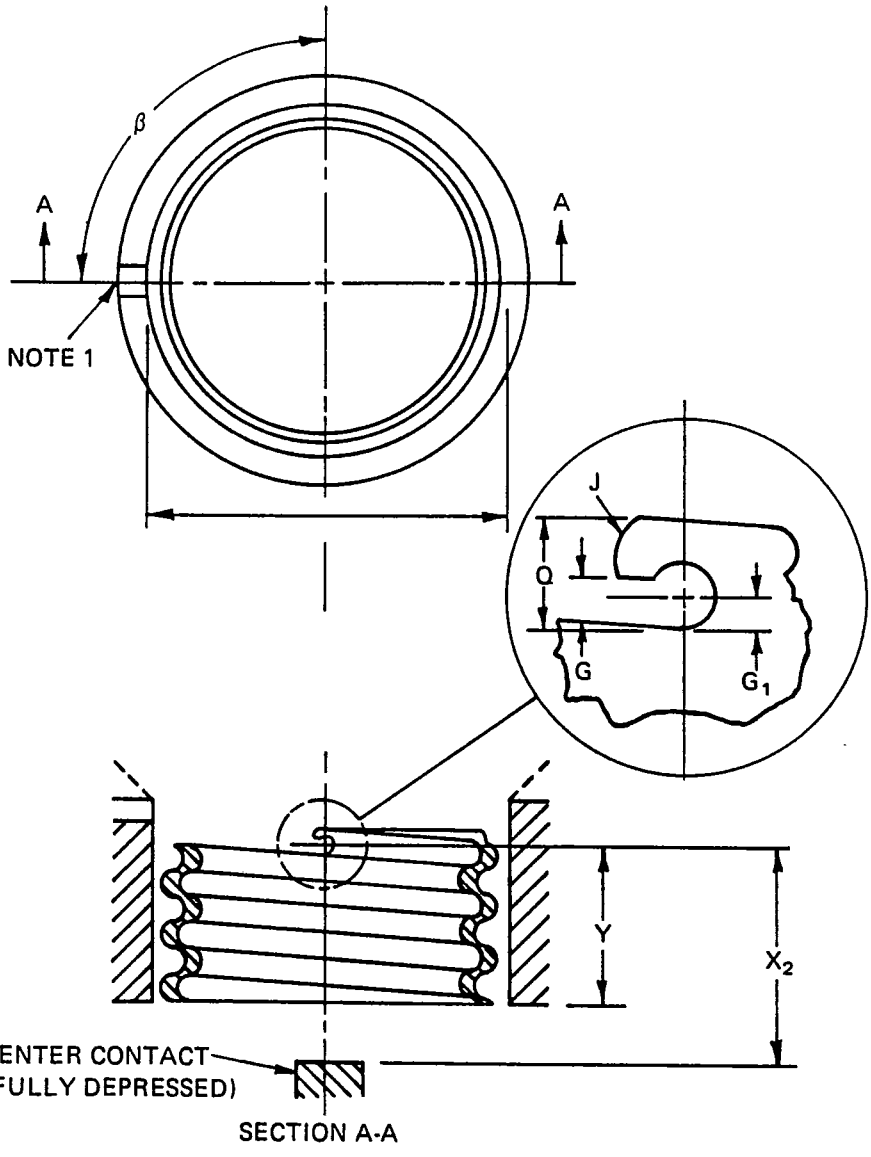

SECTION A-A

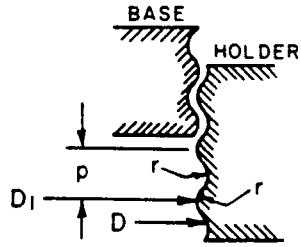

DETAIL OF THREAD

Copyright National Electrical Manufacturers Association
Provided by IHS under license with NEMA
No reproduction or networking permitted without license from IHS
Not for Resale

Reference	Standard dimensions in		Nearest metric equivalent mm	
	Min	Max	Min	Max
D (Note 2)	1.565	1.577	39.75	40.06
D_1	1.465	1.477	37.21	37.52
E	1.750	–	44.45	–
G_1 (Note 3)	0.060R	0.065R	1.52R	1.65R
J	0.016R	0.046R	0.41R	1.17R
Q	0.220	0.240	5.59	6.10
G	0.098	0.108	2.50	2.74
X_2 (Note 4)	1.060	–	26.92	–
Y (Note 5)	0.650	–	16.50	–
(degrees)	85°	95°	85°	95°

NOTES

1 The notch in the insulating body of the lampholder is provided to aid the proper orientation of an assembled lampholder in a luminaire. For horizontal lamp applications, this notch would be located at the low end of the vertical diameter.

2 Each lampholder shall have a stop for proper positioning of the lamp arc tube. Plane A-A indicates the beginning of the thread and the location of the cutout (stop) position at 90 degrees to the notch in the body of the lampholder. The thread cutout starts at the beginning of the thread and follows the thread for 360 degrees, thus removing one thread crest and one thread root.

3 The center for radius G_1 is located 0.015 inch (0.381 mm) above the major thread diameter D_1, of the holder. Circumferentially, the center of this locking slot is located by the angle beta from the notch in the insulating body. See note 1.

4 The X_2 dimension is measured by the Minimum Insertion Gauge (see ANSI C81.63, Standard Sheet 3-204) and represents the distance from the centerline of the locking hole to the fully depressed center contact.

5 The Y dimension represents the distance from the centerline of the locking hole to the bottom of the thread.

6 The maximum torque used for lamp insertion shall be 25 lbf-in (2.8 Newton-meter).

7 The central contact shall make a good electrical connection when the lamp is fully inserted.

8 The base pin locking device shall provide a minimum unlocking torque of 10 lbf-in (1.1 Newton-meter) when a position-oriented mogul lamp base is fully inserted in the lampholder.

9 Insulation slope is controlled by the holder gauge.

Copyright National Electrical Manufacturers Association
Provided by IHS under license with NEMA
No reproduction or networking permitted without license from IHS
Not for Resale

Form of EP39 mogul screw threads

Threads per inch 4

Pitch of thread, p.....0.250 in (6.350 mm)

Radius of thread, r.....0.0906 in (2.301 mm)

Direction of threads .....right hand

Gauging

Threaded "Go" Gauge 3-190: It shall be possible to screw this gauge into a lampholder smoothly. When the gauge is inserted as far as it will go, the threaded portion of the lampholder shall be coplanar with or project beyond surface Y_1, but shall not project beyond surface Y_2.

"Not-go" Plug Gauge 3-191: This gauge shall not enter the screw thread of a lampholder, by its own mass, so far that the thread protrudes beyond surface T.

Threaded Gauge for Testing Minimum Insertion Clearance, Gauge 3-204: It shall be possible to screw the gauge 3-204 into a lampholder until the pin engages the pin-lock stop of the holder.

Threaded Gauge for Testing Contact-making, Gauge 3-205: When gauge 3-205 is fully seated in a lampholder, the indicator lamp (IL) shall light. In this position there shall be a clearance between the gauge and the upper edge of the holder if the holder is made of ceramic or other material that may scratch a glass bulb. This clearance may be verified by the use of a feeler gauge 0.003 in (0.08 mm) thick and 0.2 in (5.0 mm) wide.

Base

See ANSI C81.61, Standard Sheet 1-202.

Copyright National Electrical Manufacturers Association
Provided by IHS under license with NEMA
No reproduction or networking permitted without license from IHS
Not for Resale

Fa8 Single-Pin Fluorescent Lampholder

The designation assigned to this lampholder, in accordance with the coding system of the International Electrotechnical Commission (IEC), is Fa8.

At the time of issuance of this standard, there was no comparable IEC standard in existence.

The drawing is intended only to indicate the dimensions to be controlled.

Combined pair of holders

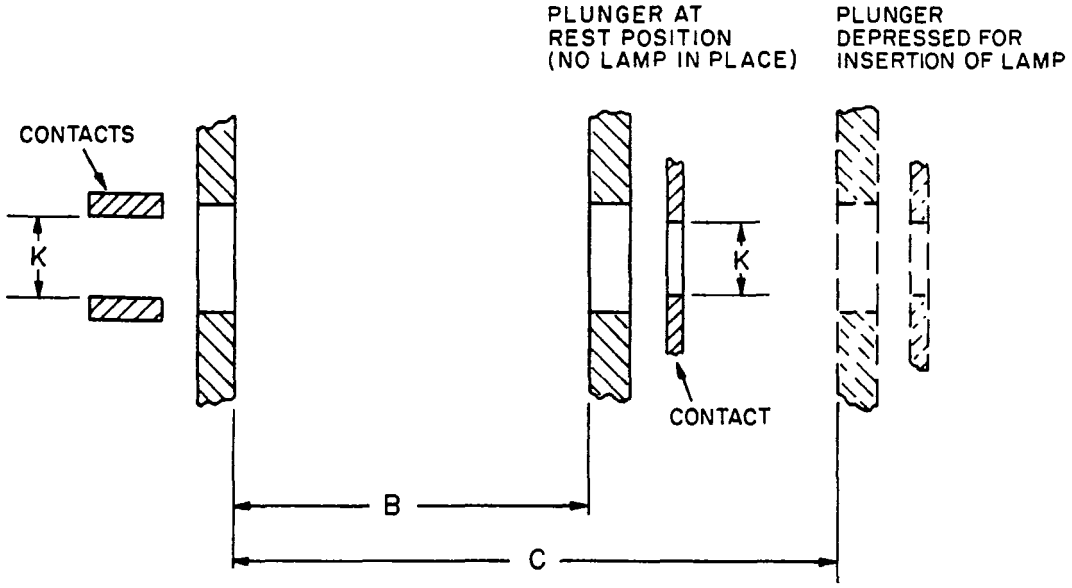

Dimensions

B = Face-to-face dimension with no lamp in place.

C = Face-to-face dimension with plunger depressed for insertion of the lamp.

K = 0.177 inch (4.50 mm) minimum.

Nominal lamp length in	**B** in **max**	**C*** in **min**	**Nearest metric equivalent** mm	
			B	**C***
42	39.060	39.690	992.12	1008.13
48	45.060	45.690	1144.52	1160.53
64	61.060	61.690	1550.92	1566.93
72	69.060	69.690	1754.12	1770.13
96	93.060	93.690	2363.72	2379.73

* These values must be increased by 0.020 in (0.51 mm) if the holder faces do not provide recesses for the pin flange.

Copyright National Electrical Manufacturers Association
Provided by IHS under license with NEMA
No reproduction or networking permitted without license from IHS
Not for Resale

With the holders mounted at the maximum permissible spacing (as recommended by the holder manufacturer), dimension B shall not exceed the value given in the preceding table.

With the holders mounted at the minimum recommended spacing and with the plunger fully depressed, dimension C shall not be less than the value given in the preceding table.

Dimension K indicates the minimum clearance to be provided for the tip on the lamp base pin. Electrical contact shall be made outside of the tip area.

Clearance for live parts
A holder designed for use at the low-voltage end of the circuit shall have all exposed live parts recessed so that they cannot be touched by a test probe having a hemispherical end with a radius of 0.205 inch (5.21 mm).

A holder designed for use at the high-voltage end of the circuit shall have all exposed live parts recessed so that there will be a spacing of not less than 0.125 inch (3.18 mm) between the above-described test probe and each live part.

Primary circuit disconnects
A holder designed for the low-voltage end shall have its contacts so constructed that the primary circuit of the ballast is closed by the entry of the lamp pin, after insertion of one lamp end in the high-voltage holder, and is openned by the removal of the pin before removal of the lamp end from the opposite holder.

Contact force
With the lampholders at their maximum permissible spacing, the force exerted on a lamp of minimum length shall not be less than 2 lb (8.9 Newtons).

Gauging
Double-ended "GO" and Contact-making Gauge 3-254: Individual Fa8 lampholders shall accept and make electrical contact with both ends of gauge 3-254. Electrical contact shall be maintained both initially and during rotation of the gauge to an angle of 3° axial misalignment between gauge and holder.

See ANSI C81.63 for gauges.

Base
See ANSI C81.61, Standard Sheet 1-250.

Copyright National Electrical Manufacturers Association
Provided by IHS under license with NEMA
No reproduction or networking permitted without license from IHS
Not for Resale

G3.9 Lampholder

The designation assigned to this lampholder in accordance with the coding system of the International Electrotechnical Commission (IEC) is G3.9.

At the time of issuance of this standard, there was no comparable IEC standard in existence.

The drawing is intended only to indicate the dimensions to be controlled.

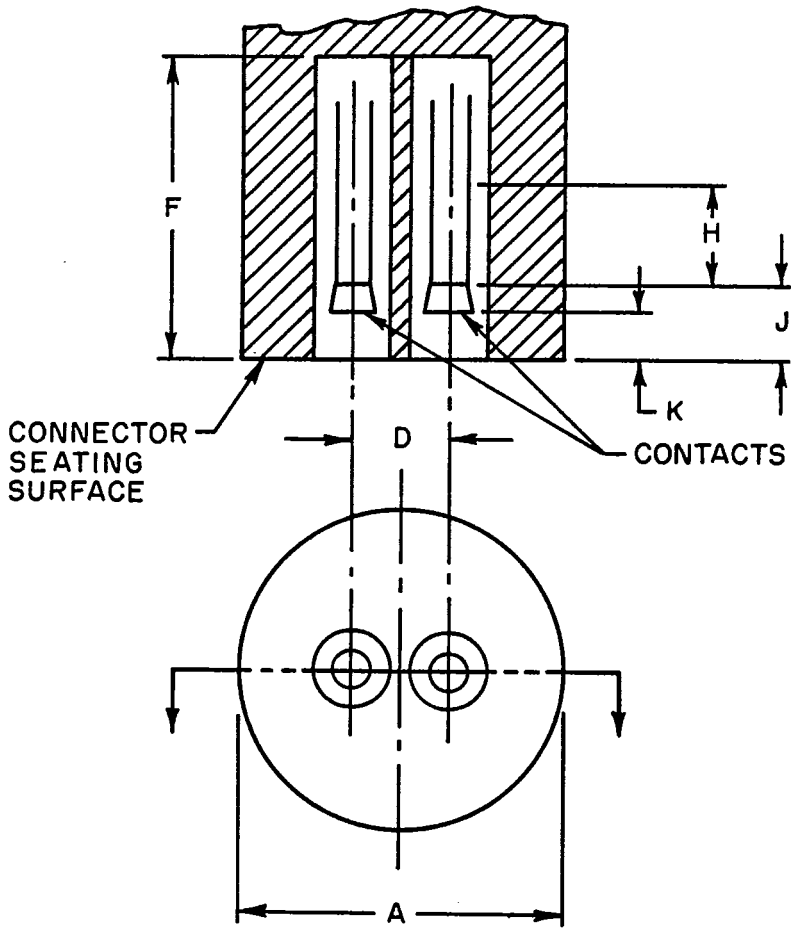

Copyright National Electrical Manufacturers Association
Provided by IHS under license with NEMA
No reproduction or networking permitted without license from IHS
Not for Resale

Reference	Standard dimensions in			Nearest metric equivalent mm		
	Min	Nom	Max	Min	Nom	Max
A	–	–	12.00	–	–	0.472
D	–	3.97	–	–	0.156	–
F (Note 1)	12.20	–	–	0.480	–	–
H (Note 2)	3.00	–	–	0.118	–	–
J	–	–	5.60	–	–	0.220
K	2.80	–	–	0.110	–	–

NOTES

1 The contacts shall accommodate pins covering the full range of length and diameter and a pin spacing tolerance of 0.016 inch (±0.40 mm) for the base shown in ANSI C81.61, Standard Sheet 1-300.

2 Contact-making area.

Gauging

Double-ended "Go" Gauge 3-303: When inserting gauge 3-303, each end of the gauge shall fully enter the lampholder. Also when applying this gauge, the force shall not exceed 5.6 lbf (25 Nt).

Minimum Retention Force Gauge 3-304: With the lampholder held "gauge down", this gauge shall not fall out by its own weight.

See ANSI C81.63 for gauges.

Base

See ANSI C81.61, Standard Sheet 1-300.

Copyright National Electrical Manufacturers Association
Provided by IHS under license with NEMA
No reproduction or networking permitted without license from IHS
Not for Resale

LAMPHOLDER

DOUILLE

GU4

Dimensions in millimetres - Dimensions en millimètres

The drawing is intended only to illustrate the dimensions essential for interchangeability.
Le dessin a pour seul but d'illustrer les dimensions essentielles pour l'interchangeabilité.

For details of base GU4, see sheet 7004-108.
Pour les détails du socle GU4, voir feuille 7004-108.

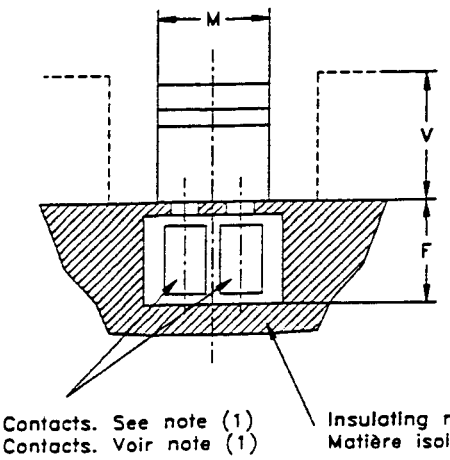

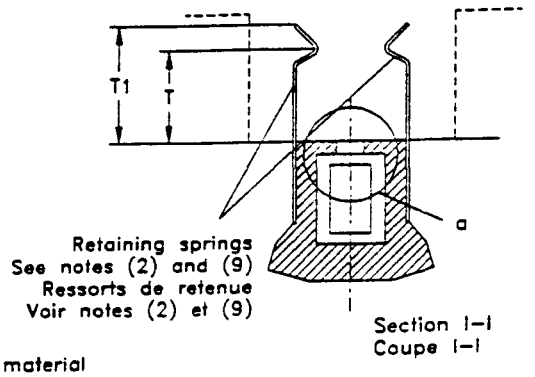

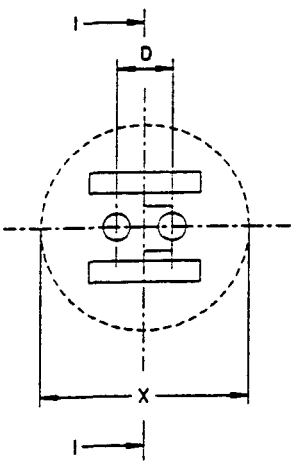

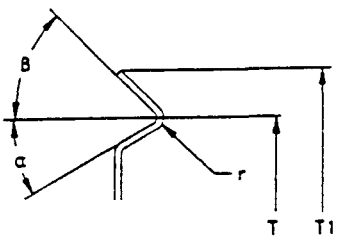

Detail of retaining spring
Détail du ressort de retenue

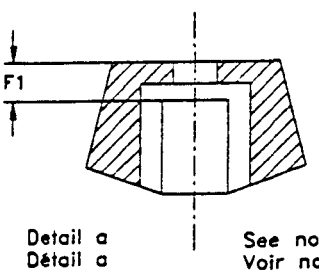

Detail a
Détail a

See note (7)
Voir note (7)

Copyright National Electrical Manufacturers Association
Provided by IHS under license with NEMA
No reproduction or networking permitted without license from IHS
Not for Resale

LAMPHOLDER

DOUILLE

GU4

Dimensions in millimetres - Dimensions en millimètres

Dimension	Min.	Max.
D (7)	4	
F	9,1	–
F1 (8)	–	2,03
M	8,0	10,0
T (10)(6)	4,85	5,35
T1	–	8,5
V (5)	8,5	
X (5)	23	
r (3)	–	0,8
I	25°	35°
9	35°	45°

(1) Contacts should be floating.
(2) The springs used for retention shall be of a material which ensures that the retention forces are not substantially changed throughout the life of the lampholder, taking into account the relatively high temperatures and continuous stress involved.
Plastic material shall not be used until appropriate requirements and tests for ageing have been established.
(3) Outside radius.
(4) Insertion and withdrawal forces are under consideration.
(5) Dimensions V and X delineate the demarcation between the space which may be occupied by parts of the lamp and the space which may be occupied by rigid parts of the lampholder and/or luminaire.
The manufacturer's mounting instructions shall include information on the required free space for the travel of the retention springs, if during insertion of the lamp these springs interfere with the free space requirement.
(6) Dimension of retention point above holderface. This dimension does not designate actual spring length.
(7) Hole diameter and spacing in combination with allowances are checked by means of the gauge shown on sheet 7006-108C.
(8) Dimension F1 controls positioning of the contacts so that there is sufficient contact length available to engage the shortest base pins.
(9) Retaining spring spacing and tension are checked by means of the gauge shown on sheet 7006-108C.
(10) Measured with a nominal distance of 9 mm between the spring tips, defined by dimension r.

(1) Il convient que les contacts aient du jeu.
(2) Les ressorts utilisés pour la fixation doivent être en matériau qui garantisse que les forces de rétention ne changeront pas de manière sensible durant la vie de la douille en tenant compte de la température relativement élevée et de la contrainte continue imposée.
Le matériau plastique ne doit pas être utilisé tant que les prescriptions et les essais appropriés n'auront pas été établis.
(3) Rayon extérieur.
(4) Les forces d'insertion et de retrait sont à l'étude.
(5) Les dimensions V et X définissent la démarcation entre l'espace qui peut être occupé par des parties de la lampe et celui qui peut être occupé par les parties rigides de la douille et/ou du luminaire.
Les instructions de montage du fabricant de luminaire doivent comporter une information sur l'espace libre nécessaire pour la trajectoire des ressorts de retenue, si, pendant l'insertion de la lampe, ces ressorts interfèrent avec l'exigence de l'espace libre.
(6) Cette dimension définit la hauteur du point de rétention par rapport à la face de la douille. Cette dimension n'indique pas la longueur du ressort.
(7) Le diamètre des trous et leur espacement en combinaison avec les valeurs autorisées sont vérifiés au moyen du calibre indiqué sur la feuille 7006-108C.
(8) La dimension F1 vérifie la position des contacts de façon à ce qu'il y ait une longueur de contact suffisante lors de l'insertion des broches les plus courtes d'un socle.
(9) L'espacement et la tension des ressorts de retenue sont vérifiés au moyen du calibre indiqué sur la feuille 7006-108C.
(10) Mesuré avec une distance nominale de 9 mm entre les extrémités des ressorts définis par la dimension r.

GAUGING: Lampholders GU4 shall fulfil the tests of the gauges shown on sheets 7006-108A, 7006-108B, 7006-108C and 7006-108D.

VERIFICATION: Les douilles GU4 doivent satisfaire aux essais avec les calibres selon les feuilles 7006-108A, 7006-108B, 7006-108C et 7006-108D.

Copyright National Electrical Manufacturers Association
Provided by IHS under license with NEMA
No reproduction or networking permitted without license from IHS
Not for Resale

CONNECTOR FOR BI-PIN LAMP BASE
CONNECTEUR POUR SOCLE DE LAMPE A DEUX BROCHES
GZ4

Dimensions in millimetres - Dimensions en millimètres

The drawing is intended only to indicate the dimensions essential for interchangeability.
Le dessin a pour seul but d'indiquer les dimensions essentielles pour l'interchangeabilité.

For details of lamp base GZ4, see sheet 7004-67.
Pour les détails du socle de lampe GZ4, voir feuille 7004-67.

Scale
Echelle 2:1

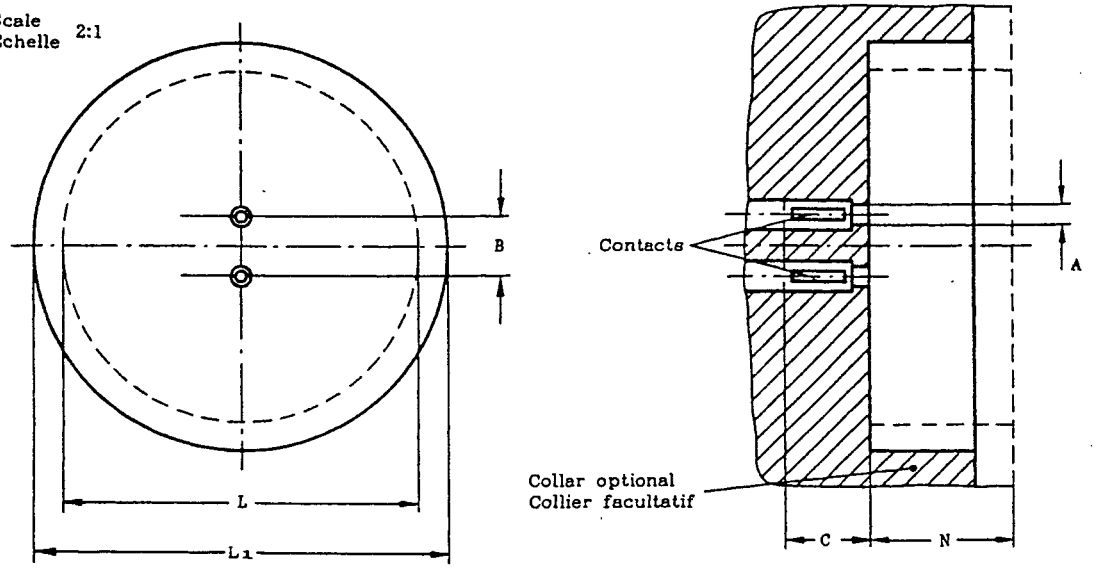

This standard sheet shows means of electrical connection only. Information on achieving complete mechanical and optical fit is under consideration.

Cette feuille de normes concerne seulement l'organe de connexion électrique. Les détails de la mise en place mécanique et optique sont à l'étude.

(1) This dimension applies only to connectors provided with a cover plate.

(2) Dimension L_1 takes into account free space around the base to assist ventilation. However, if the connector is provided with a shroud, special measurement may be necessary to ensure that in use, the pinch temperature of the lamp does not exceed the value prescribed in the relevant lamp data sheet.

(3) Dimensions L and N delineate the demarcation between the space which may be occupied by parts of the lamp and the space which may be occupied by rigid parts of the lampholder and/or luminaire.

(1) Cette dimension est seulement applicable aux connecteurs munis d'une plaque de recouvrement.

(2) La dimension L_1 tient compte de l'espace libre autour du socle nécessaire à la ventilation. Toutefois, si le connecteur est muni d'une bordure, une vérification spéciale peut être nécessaire, afin de s'assurer que, pendant le fonctionnement, la température du pincement de la lampe ne dépasse pas la limite prescrite dans la feuille de caractéristiques techniques de cette lampe.

(3) Les dimensions L et N définissent la démarcation entre l'espace qui peut être occupé par des parties de la lampe et celui qui peut être occupé par des parties rigides de la douille et/ou du luminaire.

Dimension	Min.	Max.
A (1)	1,35	-
B	4,0	
C	6,0	-
L (3)	25,0	
L_1 (2)	29,0	-
N (3)	10,0	
Mass kg Masse	Max. 0,05	

GAUGING: Connectors GZ4 shall fulfil the tests of the gauges shown on sheets 7006-59A and 7006-67A.

VERIFICATION: Les connecteurs GZ4 doivent satisfaire aux essais avec les feuilles 7006-59A et 7006-67A.

Copyright National Electrical Manufacturers Association
Provided by IHS under license with NEMA
No reproduction or networking permitted without license from IHS
Not for Resale

G5 miniature bipin lampholder

The designation assigned to this lampholder by the International Electrotechnical Commission (IEC) is G5. At the time of publication there was no equivalent IEC publication in existence.

The drawing is intended only to indicate the dimensions to be controlled.

Inflexible (rigidly fixed) lampholders

This type of lampholder requires a turning motion for the insertion of a lamp.

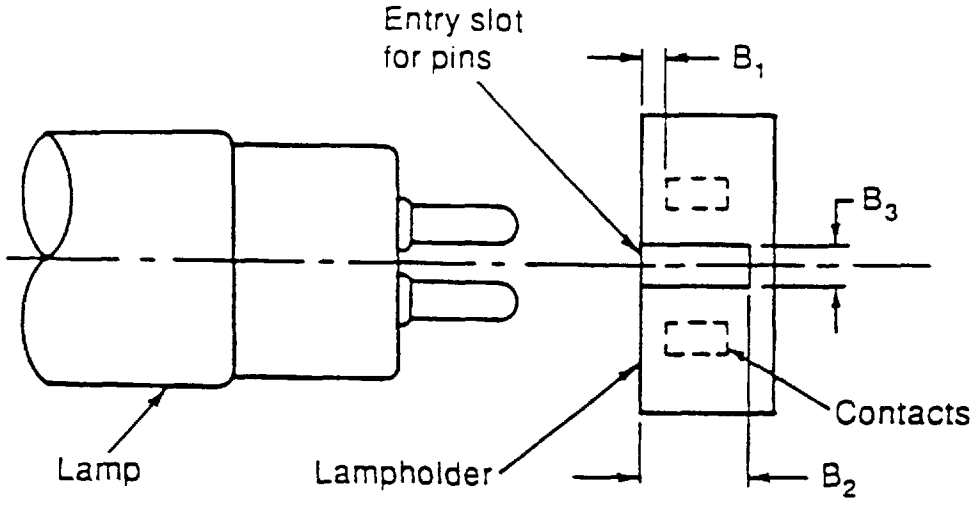

B_1—The distance between the live contacts and the lampholder face shall not be greater than 0.100 inch (2.54 mm).

B_2—The entry slots of inflexible lampholders shall have a depth not less than 0.265 inch (6.73 mm).*

B_3—The width of the entry slots shall be great enough to accommodate the lamp-base pins with allowance for misalignment both of the lamp bases (with respect to each other) and of the lampholders. The gauge shown in ANSI C81.63, Standard Sheet 3-317 has the base pins at its two ends so arranged as to simulate a lamp with the maximum rotation misalignment of pins.

Clearance for live parts

When no lamp is in place, a test probe having a hemispherical end with a radius of 0.205 inch (5.21 mm) shall not be able to contact live metal parts.

* IEC 61 requires a minimum depth of 0.290 inch (7.35 mm).

Copyright National Electrical Manufacturers Association
Provided by IHS under license with NEMA
No reproduction or networking permitted without license from IHS
Not for Resale

Lamp retention requirement, inflexible lampholders

The following requirements apply to those types of lampholders requiring rotation of the lamp during insertion. Test devices are to be applied to an individual lampholder to evaluate the maximum torque or force upon insertion and removal, and the minimum torque or force upon removal. The values given are for a single lamp-base test device in a single lampholder. These test devices are specified on Standard Sheet 3-314 as Device A, B, and C.

The following are the requirements pertaining to retention:

1. All lampholders shall have detents or other similar arrangements of contact springs (or other lampholder parts) to give a definite indication of when a lamp has reached its normal seating position.

2. Lampholders for rotational motion, with outside contacts:

   a. On the initial cycle the torque required to properly insert and remove Device A and Device B shall not exceed 2.0 lbf-in. (0.23 N-m).
   b. Simultaneously, the torque required to rotate each test device out of its seated position, including Device C, shall not be less than 0.5 lbf-in. (0.55 N-m).

The simulated lamp base by which the torque is applied to the holder is described on ANSI C81.63, Standard Sheet 3-314. If the holders being tested have push-in terminals, a single No. 18 AWG or 0.072 mm solid wire should be inserted in each terminal before the test is made. As a preconditioning cycle, there shall be one clockwise and one counter-clockwise rotation or one insertion and withdrawal routine of each device before the initial measurement is taken.

Gauging

G5 lampholders of the flexible (rigidly fixed) type shall satisfy the gauges specified on ANSI C81.63, Standard Sheets 3-313, 3-317, and 3-318.

Gauge 3-313

Both the minimum and maximum 3-313 gauges shall enter the lampholder far enough to bring the gauge face into contact with the holder face. Each gauge shall be easily removable by hand without causing breakage of any parts of the lampholder.

G5 lampholders that require rotation of the lamp during insertion shall be tested using the following procedure for each of the two 3-313, "go" gauges: The maximum pin spacing gauge shall be inserted by first rotating the gauge in a clockwise direction to seat it in the lampholder an then rotating it in a counter-clockwise direction to remove it from the holder. The gauge shall then be inserted with a counter-clockwise rotation and removed with a clockwise rotation. The procedure shall then be repeated using the minimum pin spacing gauge.

Lampholders shall show good engagement with the pins of the minimum-spacing gauge after having been tested with the gauge having pins set at maximum spacing.

Gauge 3-317

When the lampholders are mounted at their minimum permissible spacing (as recommended by the manufacturer) with respect to a nominal lamp length of 9 inches (228.6 mm) it should be possible to insert and remove the 3-317 gauge without difficulty. The force required to insert the gauge in the

Copyright National Electrical Manufacturers Association
Provided by IHS under license with NEMA
No reproduction or networking permitted without license from IHS
Not for Resale

direction of the lamp axis shall not exceed 3.3 lb. (15 N). The force in the direction perpendicular to the lamp axis is under consideration.

Gauge 3-318

The insertion of the 3-318 gauge shall cause both indicator lamps of the test circuit to light. The indicator lamps shall remain lighted in spite of any possible axial movement of the gauge between the two holders.

See ANSI C81.63 for gauges.

Push-in terminals

G5 lampholders employing push-in type terminals should be designed to accept connecting wires having strip lengths ranging from a minimum of 0.359 inch (9.13 mm) to a maximum of 0.453 inch (11.51 mm). (It is recognized that there may be existing designs that do not meet this requirement.)

Base

See ANSI C81.61, Standard Sheet 1-310.

Copyright National Electrical Manufacturers Association
Provided by IHS under license with NEMA
No reproduction or networking permitted without license from IHS
Not for Resale

Copyright National Electrical Manufacturers Association
Provided by IHS under license with NEMA
No reproduction or networking permitted without license from IHS

Not for Resale

G5.3 Lampholder

The designation assigned to this lampholder by the International Electrotechnical Commission (IEC) is G5.3.

This standard sheet is equivalent to IEC Publication 61.

The drawing is intended only to indicate the dimensions to be controlled.

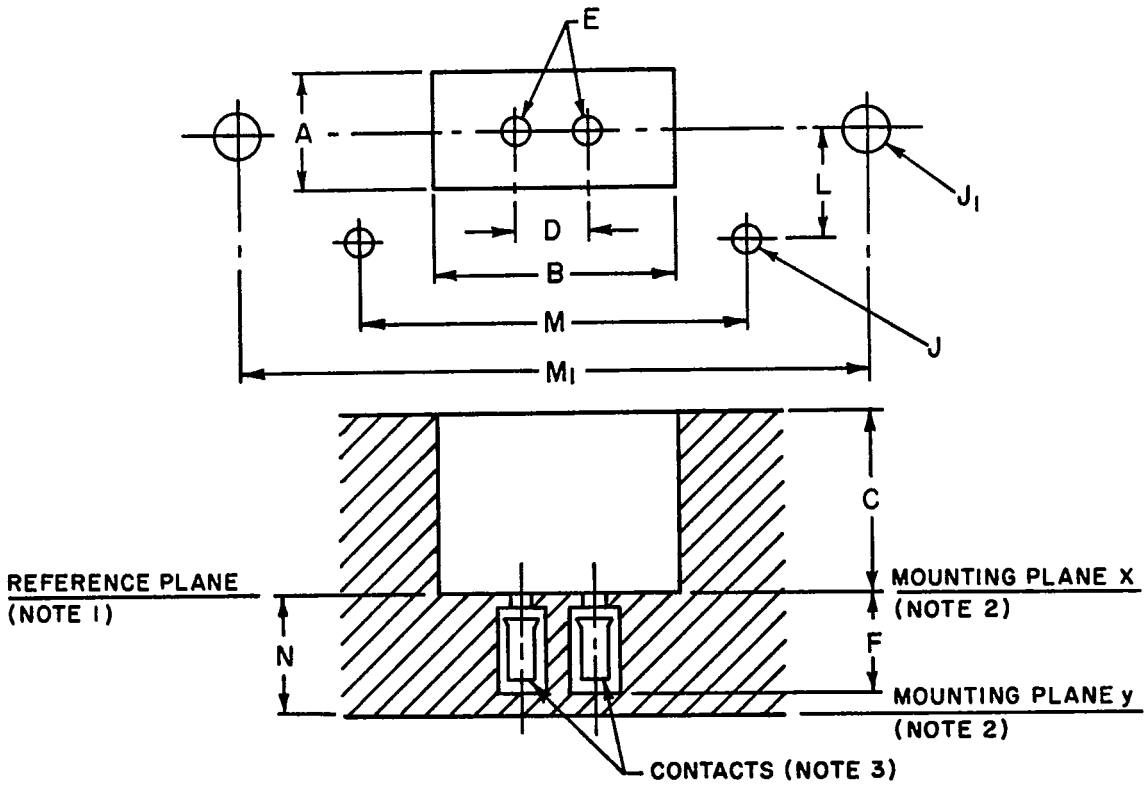

Copyright National Electrical Manufacturers Association
Provided by IHS under license with NEMA
No reproduction or networking permitted without license from IHS
Not for Resale

ANSI C81.62-1991
Std Sheet 2-320-1

Reference	Standard dimensions in			Nearest metric equivalent mm		
	Min	Nom	Max	Min	Nom	Max
A (Notes 4, 5)	0.352	–	–	8.94	–	–
B (Notes 4, 5)	0.752	–	–	19.10	–	–
C	–	–	0.598	–	–	15.20
D	–	0.210	–	–	5.33	–
E	0.076	–	0.085	1.93	–	2.16
F	0.282	–	–	7.16	–	–
J	0.070	–	0.080	1.78	–	2.03
J_1	0.127	–	0.137	3.23	–	3.48
L	0.250	–	0.270	6.35	–	6.86
M	0.490	–	0.510	12.45	–	12.95
M_1	1.745	–	1.755	44.32	–	44.58
N	0.300	–	0.320	7.62	–	8.13

NOTES

1 Reference plane of the base seats on reference plane of the holder.

2 Mounting options: Where plane x is to be the mounting plane, the mounting holes should be those indicated by dimensions M_1 and J_1. Where plane y is to be the mounting plane, the mounting holes should be those indicated by dimensions M, J, L, and N.

3 The contacts shall accommodate pins of the full range of length and diameter and a pin spacing tolerance of ±0.010 inch (0.25 mm).

4 Within the area enclosed by dimensions A and B, there shall be no projections extending beyond the reference plane. The seating surface need not be continuous but shall be adequate to establish the reference plane and provide sufficient support for the bosses of the base.

5 Dimensions A, B, and C define a space reserved for the lamp base.

Gauging

"Go" Gauge 3-326: Each end of gauge 3-326 shall enter the lampholder until surface X of the gauge seats on the reference plane of the holder.

See ANSI C81.63 for gauges.

Base

See ANSI C81.61, Standard Sheet 1-320.

Copyright National Electrical Manufacturers Association
Provided by IHS under license with NEMA
No reproduction or networking permitted without license from IHS
Not for Resale

GX5.3 Lampholders and Connector

The designation of these lampholders and connectors according to the coding system of the International Electrotechnical Commission (IEC) is GX5.3.

At the time of issuance of this standard, there was no comparable IEC standard in existence.

General design features

Holders of this kind fall in two main design categories, those connectors that provide only an electrical connection function and those lampholders that provide both electrical connection and mechanical support. Some of those in the latter category are used in double-ended flexible holding systems and must meet some additional requirements of that system, as noted in ANSI C81.64, Standard Sheet 4-1. The design shown in figure 2 is of that type.

Dimensions of the contact assembly for use in a double-ended holding system lamp are set in relation to other features of the system. Primary positioning of a lamp is controlled at the rim of the lamp. The fit of the lamp pins into the grooves of the contact assembly is of secondary importance only, due to the flexible nature of the mounting of the assembly. The fit of the pins of the lamp base in the grooves of a contact assembly provide the necessary circumferential orientation of a lamp. Consequently, the fit at the dimension R slot is of third order importance.

The drawings are intended only to indicate the dimensions to be controlled.

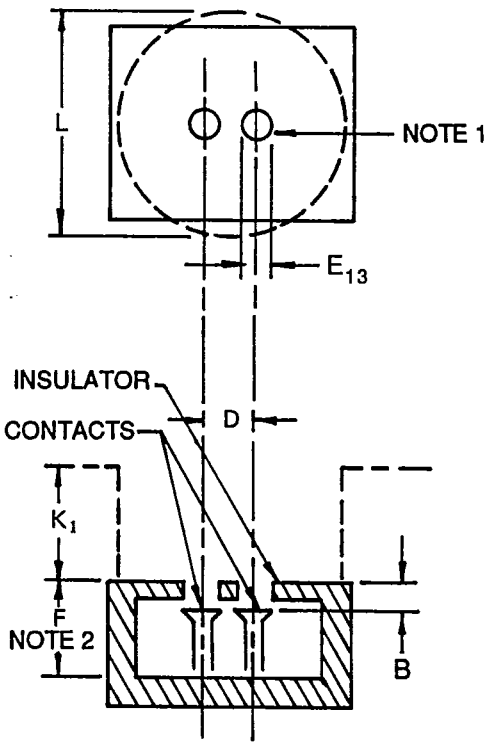

Figure 1 – Connector

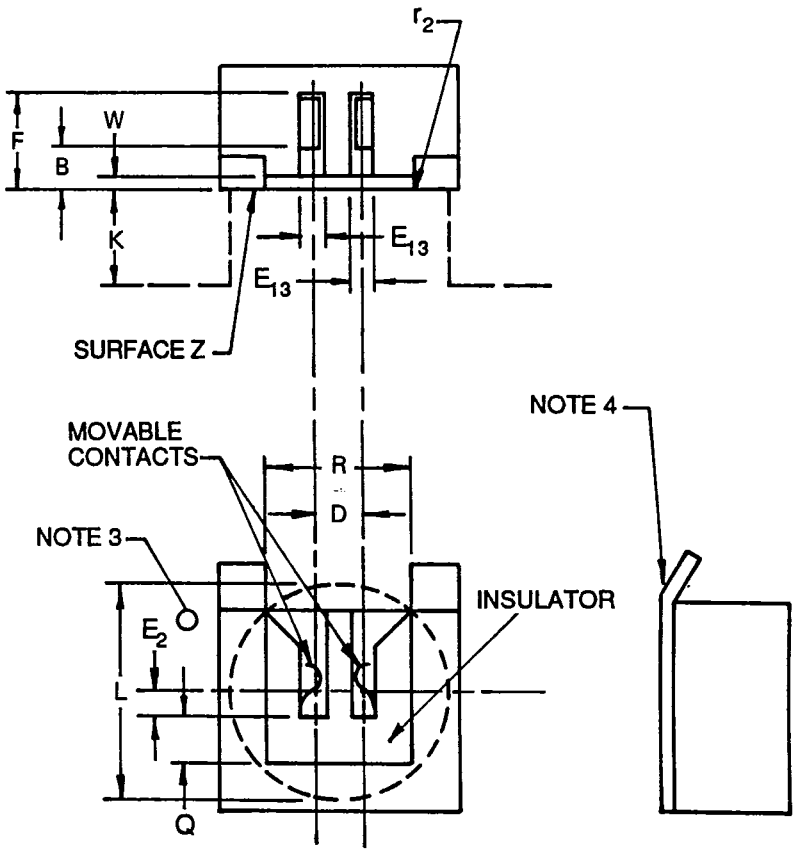

Figure 2 – Contact assembly with parallel slide-in grooves

Copyright National Electrical Manufacturers Association
Provided by IHS under license with NEMA
No reproduction or networking permitted without license from IHS
Not for Resale

Reference	Standard dimensions in			Nearest metric equivalent mm		
	Min	Nom	Max	Min	Nom	Max
B (Note 5)	–	–	0.080	–	–	2.03
D (Notes 1,6)	–	0.210	–	–	5.33	–
E (Note 6)	–	0.063	–	–	1.60	–
E_{13} (Note 1)	0.075	–	0.085	1.90	–	2.16
F	0.267	–	–	6.78	–	–
K (Note 7)	–	0.394	–	–	10.0	–
L (Note 6,7)	–	0.984	–	–	25.0	–
Q	0.169	–	–	4.29	–	–
R	0.517	–	0.547	13.13	–	13.89
W	0.052	–	–	1.32	–	–
r_2	0.017	–	0.032	0.43	–	0.81

NOTES

1 Hole Diameter and spacing, in combination and with allowances, are checked by the gauge on ANSI C81.63, Standard Sheet 3-327.

2 Entire base pin length provided for, in case base dimension J = 0.

3 For design purposes, dimension 1/2-E provides a minimum length of the grooves below the horizontal centerline.

4 Lead-in angle or radius recommended.

5 Dimension B Max. controls positioning of the contacts so that there is sufficient contact length available to engage the shortest base pins. B Min. is determined in relation to the "Clearance for Live Parts" Tests.

6 Dimension D, 1/2-E and L of figure 2 are referenced to the horizontal centerline. This centerline has only a secondary relationship to the mating position of the base's pins, because the lamp and base are primarily positioned relative to the rim-centering device of the holding system, as described in ANSI C81.64, Standard Sheet 4-1.

7 The dimensional combination K-L shows the theoretical demarcation between the space which the lamp may occupy on the one side and the space where parts of the holder or equipment may be present on the other side.

Copyright National Electrical Manufacturers Association
Provided by IHS under license with NEMA
No reproduction or networking permitted without license from IHS
Not for Resale

Clearance for live parts
When no lamp is in place, the IEC Articulate Probe per UL 122 shall not be able to contact live metal parts.

Gauging
"Go" Gauge 3-327: It shall be possible to insert each end of this gauge into the contact assembly until surface *z* seats on the face of the holder. For those holders designed for slide-in type insertion of a lamp, the gauge shall be inserted in a similar manner.

Dual Pin retention Gauge 3-331: During removal of this gauge, the force required shall not exceed 15N.

Single Pin Retention Gauge 3-333: The force required to remove this gauge shall not be less than 1N.

Base
See ANSI C81.61, Standard Sheet 1-321.

Copyright © 1997 by National Electrical Manufacturers Association
1300 North 17th Street, Suite 1847, Rosslyn, VA 22209

First Edition
December 1997

Copyright National Electrical Manufacturers Association
Provided by IHS under license with NEMA
No reproduction or networking permitted without license from IHS
Not for Resale

THIS PAGE INTENTIONALLY

LEFT BLANK

Copyright © 1997 by National Electrical Manufacturers Association
1300 North 17th Street, Suite 1847, Rosslyn, VA 22209

First Edition
December 1997

Copyright National Electrical Manufacturers Association
Provided by IHS under license with NEMA
No reproduction or networking permitted without license from IHS

Not for Resale

GY5.3 Lampholders and Connectors

The designation of these lampholders and connectors according to the coding system of the International Electrotechnical Commission (IEC) is GY5.3.

At the time of issuance of this standard, there was no comparable IEC standard.

General design features

Holders of this kind fall in two main design categories, those connectors that provide only an electrical connection function and those lampholders that provide both electrical connection and mechanical support. Some of those in the latter category are used in double-ended flexible holding systems and must meet some additional requirements of that system, as noted in ANSI C81.64 Standard Sheet 4-13. The design shown in Figure 2 is of that type.

Dimensions of the contact assembly for use in a double-ended holding system are set in relation to other features of the system. Primary positioning of a lamp is controlled at the rim of the lamp. The fit of the lamp pins into the grooves of the contact assembly is of secondary importance only, due to the flexible nature of the mounting of the assembly. The fit of the pins of the lamp base in the grooves of a contact assembly provide the necessary circumferential orientation of a lamp. Consequently, the fit at the dimension R slot is of third order importance.

The size, shape, and composition of the insulation cover or the grooves in the GY5.3 holders prevent insertion of lamps with GX5.3 bases.

The drawings are intended only to indicate the dimensions to be controlled.

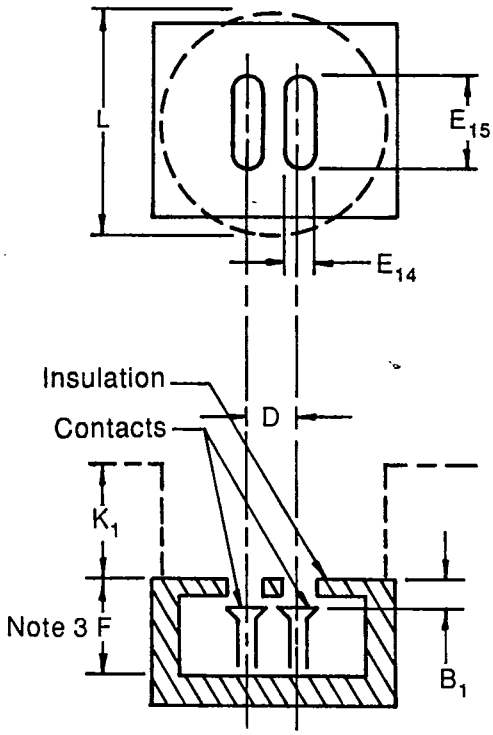

Figure 1
Connector design

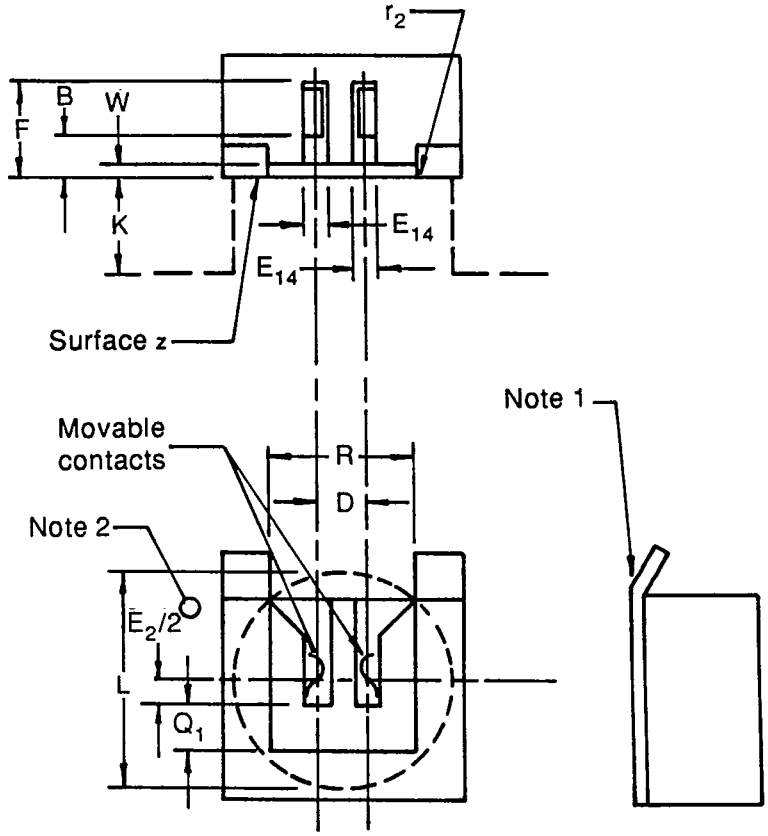

Figure 2
Contact assembly with parallel slide-in grooves

Copyright National Electrical Manufacturers Association
Provided by IHS under license with NEMA
No reproduction or networking permitted without license from IHS
Not for Resale

ANSI C81.62-1991
Std Sheet 2-322-1

Reference	Standard dimensions in			Nearest metric equivalent mm		
	Min	Nom	Max	Min	Nom	Max
B (Note 4)	–	–	0.080	–	–	2.03
D (Notes 5,6)	–	0.210	–	–	5.33	–
E_2 (Note 5)	–	0.090	–	–	2.29	–
E_{14}	0.043	–	0.050	1.09	–	1.27
E_{15}	0.092	–	0.120	2.34	–	3.05
F	0.267	–	–	6.78	–	–
K (Note 7)	–	0.394	–	–	10.0	–
L (Note 5,7)	–	0.984	–	–	25.0	–
Q	0.169	–	–	4.29	–	–
R	0.517	–	0.547	13.13	–	13.89
W	0.052	–	–	1.32	–	–
r_2	0.017	–	0.032	0.43	–	0.81

NOTES

1 Enter base pin length provided for, in case base dimension J = 0.

2 For design purposed dimension $1/2E_2$ provides a minimum length of the grooves below the horizontal centerline.

3 Lead-in angle or radius recommended.

4 Dimension B Max. controls positioning of the contacts so that there is sufficient contact length available to engage the shortest base pins. B Min. is determined in relation to the "Clearance for Live Parts Test".

5 Dimensions D, $1/2E_2$ and L of figure 2 are referenced to the horizontal centerline. This centerline has only a secondary relationship to the mating position of the base's pins, because the lamp and base are primarily positioned relative to the rim-centering device of the holding system, as described in ANSI C81.64, Standard Sheet 4-1.

6 Hole diameter and spacing in combination and with allowances, are checked by the gauge on ANSI C81.63, Standard Sheet 3-328.

7 The dimensional combinations K-L show the theoretical demarcation between the space which the lamp may occupy on the one side and the space where parts of the holder or equipment may be present on the other side.

Copyright National Electrical Manufacturers Association
Provided by IHS under license with NEMA
No reproduction or networking permitted without license from IHS
Not for Resale

Clearance for live parts
When no lamp is in place, the IEC Articulate Probe per UL 122 shall not be able to contact live metal parts.

Gauging
"Go" Gauge 3-328: It shall be possible to insert each end of this gauge into the contact assembly until surface *z* seats on the face of the holder. For those holders designed for slide-in type insertion of a lamp, the gauge shall be inserted in a similar manner.

Dual Pin retention Gauge 3-332: During removal of this gauge, the force required shall not exceed 15N.

Single Pin Retention Gauge 3-334: The force required to remove this gauge shall not be less than 1N.

Base
See ANSI C81.61, Standard Sheet 1-322.

Copyright © 1997 by National Electrical Manufacturers Association
1300 North 17th Street, Suite 1847, Rosslyn, VA 22209

First Edition
December 1997

Copyright National Electrical Manufacturers Association
Provided by IHS under license with NEMA
No reproduction or networking permitted without license from IHS
Not for Resale

THIS PAGE INTENTIONALLY

LEFT BLANK

Copyright © 1997 by National Electrical Manufacturers Association
1300 North 17th Street, Suite 1847, Rosslyn, VA 22209

First Edition
December 1997

Copyright National Electrical Manufacturers Association
Provided by IHS under license with NEMA
No reproduction or networking permitted without license from IHS

Not for Resale

G6.35 and GY6.35 Lampholders

The designations assigned to these lampholders by the International Electrotechnical Commission (IEC) are G6.35 and GY6.35.

At the time of issuance of this standard, there was no comparable IEC standard in existence.

The drawing is intended only to indicate the dimensions to be controlled.

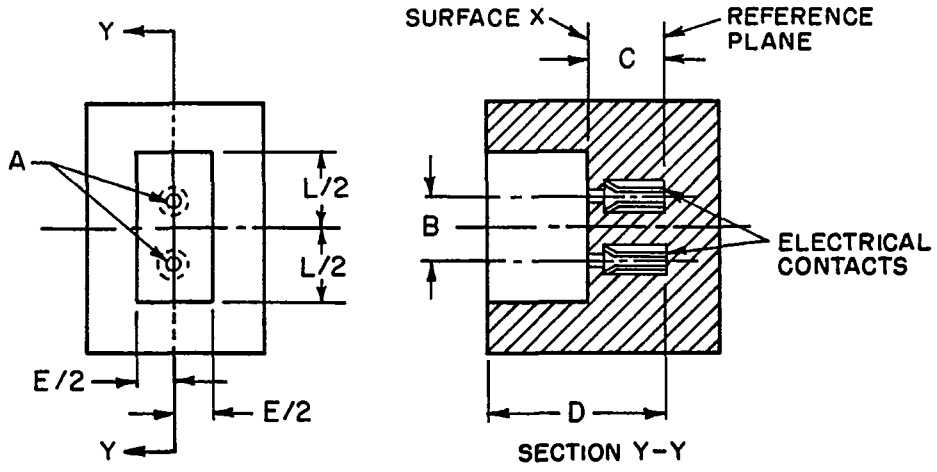

Reference	Standard dimensions in			Nearest metric equivalent mm		
	Min	**Nom**	**Max**	**Min**	**Nom**	**Max**
A (Note 1,2)	0.053	–	–	1.35	–	–
B	–	0.250	–	–	6.35	–
C	0.240	–	0.290	6.10	–	7.37
D	–	–	0.664	–	–	16.87
E	0.297	–	–	7.54	–	–
L (Note 3)	0.593	–	–	15.06	–	–

NOTES

1 Dimension A represents the minimum access to the contact through the insulating cover. Lampholders may have totally exposed contacts and thus will not have a dimension A.

2 GY6.35 lampholders shall have a minimum dimension A of 0.063 inch (1.60 mm).

3 G6.35 and GY6.35 lampholers with L dimensions other than 0.593 inch (15.06 mm) should comply with the gauge requirements found in IEC Publication 61-3, Lamp Caps and Holders together with Gauges for the Control of Interchangeability and Safety, Part 3: Gauges.

Copyright National Electrical Manufacturers Association
Provided by IHS under license with NEMA
No reproduction or networking permitted without license from IHS
Not for Resale

Gauging

"Go" Gauge 3-345: When one or the other end of gauge 3-345 is inserted in the lapholder until the pins come to a stop, there shall be a noticeable clearance between surface X of the gauge and surface X of the lampholder.

Minimum Retention Force Gauge 3-349: With gauge 3-349 fully inserted into each of the lampholder contacts in turn and with the lampholder held "gauge down," the gauge shall not fall out by its own weight.

See ANSI C81.63 for gauges.

Base

See ANSI C81.61, Standard Sheet 1-340.

Copyright National Electrical Manufacturers Association
Provided by IHS under license with NEMA
No reproduction or networking permitted without license from IHS
Not for Resale

GZ6.35 Connector

The designation assigned to this connector by the International Electrotechnical Commission (IEC) is GZ6.35.
The drawing is intended only to show the dimensions to be controlled.

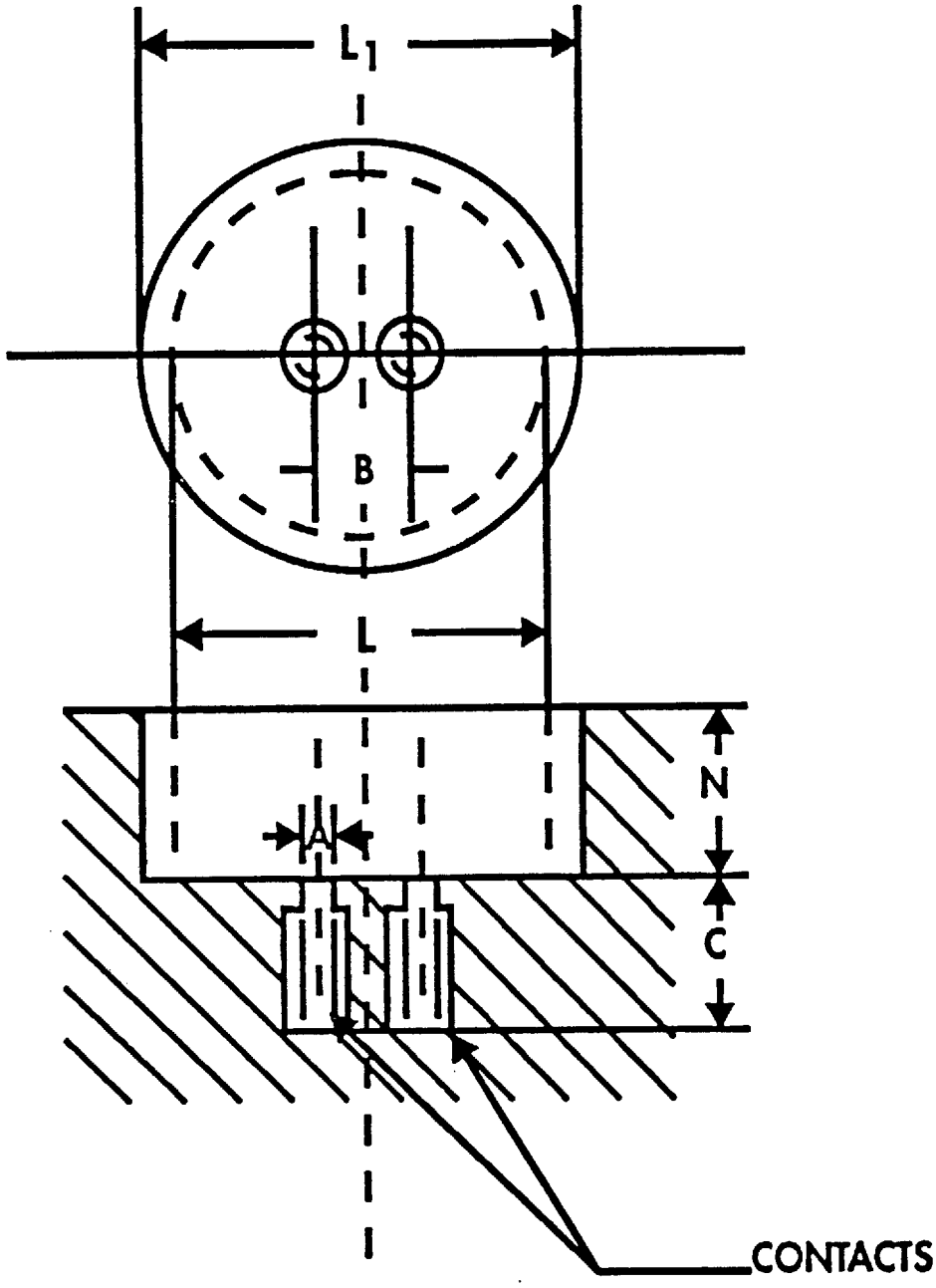

Copyright National Electrical Manufacturers Association
Provided by IHS under license with NEMA
No reproduction or networking permitted without license from IHS
Not for Resale

Standard Dimensions (millimeters)			
Reference	Min	Nom	Max.
A (Note 1)	1.35	—	—
B	—	6.35	—
C	8.5	—	—
L (Note 2)	—	25.0	—
L_1 (Note 3)	—	29.0	—
N (Note 2)	—	10.0	—

NOTES:

(1) This dimension applies only to connector with a cover plate.

(2) Dimensions L and N delineate the demarcation between the space which may be occupied by parts of the lamp base and the space which may be occupied by rigid parts of the connector, lampholder or luminaire.

(3) Dimension L_1 takes into account free space around the base to assist ventilation. If free space is restricted, care must be taken to comply with temperatures prescribed for the lamp in use.

Gauging

"Go" Gauge 3-346: It shall be possible to insert each end of the gauge, in turn, until the appropriate gauge surface X or Y is in contact with the corresponding surface of the connector.

Minimum Contact Retention Force Gauge 3-350: With the connector in an inverted position, the gauge is inserted into each contact as far as it will go. When released, the gauge shall not fall out by its own weight.

See ANSI C81.63 for gauges.

Base

See ANSI C81.61, Standard Sheet 1-342.

Copyright National Electrical Manufacturers Association
Provided by IHS under license with NEMA
No reproduction or networking permitted without license from IHS
Not for Resale

This page intentionally left blank.

Copyright National Electrical Manufacturers Association
Provided by IHS under license with NEMA
No reproduction or networking permitted without license from IHS

Not for Resale

LAMPHOLDER

DOUILLE

GU7

Dimensions in millimetres - Dimensions en millimètres

The drawing is intended only to illustrate the dimensions essential for interchangeability.
Le dessin a pour seul but d'illustrer les dimensions essentielles pour l'interchangeabilité.

For details of base GU7, see sheet 7004-113.
Pour les détails du socle GU7, voir feuille 7004-113.

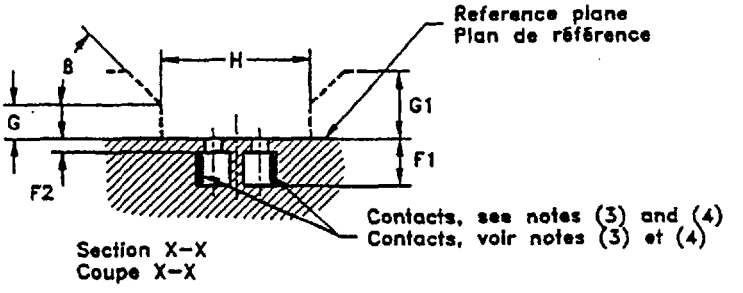

Section X–X
Coupe X–X

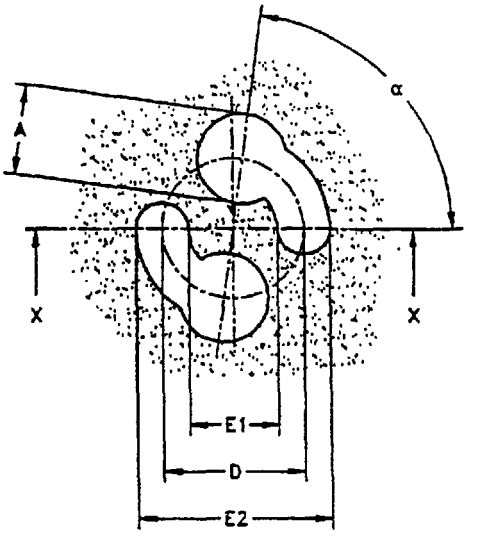

Hole detail
Détail du trou

Scale 3:1
Echelle 3:1

Dimension	Min.	Max.
A	4,4	–
D (1)	7,0	
E1	4,3	4,6
E2	9,4	9,7
F1	6,5	–
F2	–	2,25
G (2)	6	
G1 (2)	12	
H (2)	20	
α	75°	90°
ß	45°	

(1) To be checked by means of the gauge shown on sheet 7006-113A.
(2) Dimensions G, G1 and H delineate the demarcation between the space which may be occupied by parts of the lamp and the space which may be occupied by parts of the lampholder and/or luminaire.
(3) The distance from the top edge of the contacts to the reference plane shall not be greater than 2,4 mm.
(4) Side contacts only are allowed.
(5) The maximum insertion and withdrawal forces are checked with the gauge shown on sheet 7006-113A.

(1) A vérifier au moyen du calibre représenté sur la feuille 7006-113A.
(2) Les dimensions G, G1 et H définissent la délimitation entre l'espace qui peut être occupé par des parties de la lampe et l'espace susceptible d'être occupé par des parties de la douille et/ou du luminaire.
(3) Le rebord supérieur des contacts doit se trouver à une distance inférieure ou égale à 2,4 mm du plan de référence.
(4) Seulement les contacts latéraux sont admis.
(5) Les forces maximales d'insertion et d'extraction sont vérifiées avec le calibre représenté sur la feuille 7006-113A.

Copyright National Electrical Manufacturers Association
Provided by IHS under license with NEMA
No reproduction or networking permitted without license from IHS
Not for Resale

	LAMPHOLDER DOUILLE GU7	Page 2/2

Dimensions in millimetres - Dimensions en millimètres

The International Electrotechnical Commission (IEC) draws attention to the fact that it is claimed that compliance with this International Standard may involve the use of a patent concerning the lampholder given in this standard sheet.

The IEC takes no position concerning the evidence, validity and scope of this patent right.

The holder of this patent has assured the IEC that he is willing to negotiate licences under reasonable and non-discriminatory terms and conditions with applicants throughout the world. In this respect, the statement of the holder of this patent right is registered with the IEC.

Information may be obtained from:

GE LIGHTING Ltd
Technology Department
Melton Road
Leicester LE4 7PD
United Kingdom

Attention is drawn to the possibility that some of the elements of this International Standard may be the subject of patent rights other than those identified above. IEC shall not be held responsible for identifying any or all such patent rights.

La Commission Electrotechnique Internationale (CEI) attire l'attention sur le fait qu'il est déclaré que la conformité aux dispositions de la présente Norme internationale peut impliquer l'utilisation d'un brevet concernant la douille de lampe traitée dans la présente feuille de norme.

La CEI ne prend pas position quant à la preuve, la validité et la portée de ces droits de propriété.

Le détenteur de ces droits de propriété a donné l'assurance à la CEI qu'il consent à négocier des licences avec des demandeurs du monde entier, en des termes et à des conditions raisonnables et non discriminatoires. A ce propos, la déclaration du détenteur des droits de propriété est enregistrée à la CEI.

Des informations peuvent être obtenues auprès de:

GE LIGHTING Ltd
Technology Department
Melton Road
Leicester LE4 7PD
United Kingdom

L'attention est par ailleurs attirée sur le fait que certains des éléments de la présente Norme internationale peuvent faire l'objet de droits de propriété autres que ceux mentionnés ci-dessus. La CEI ne saurait être tenue pour responsable de ne pas avoir dûment signalé tout ou partie de ces droits de propriété.

Copyright National Electrical Manufacturers Association
Provided by IHS under license with NEMA
No reproduction or networking permitted without license from IHS
Not for Resale

G7.9 and GX7.9 Lampholders

The designations assigned to these lampholders in accordance with the coding system of the International Electrotechnical commission (IEC) are G7.9 and GX7.9.

At the time of issuance of this standard sheet, there was no comparable IEC standard in existence.

The G7.9 and GX7.9 lampholders differ in respect to their contact hole arrangements. The drawing shows the G7.9 version. For the GX7.9, low-voltage arrangement, the large and small contact holes are interchanged. These lampholders are intended for application where precise aiming and positioning requirements exist for side prong based lamps.

The drawing is intended only to indicate the dimensions to be controlled.

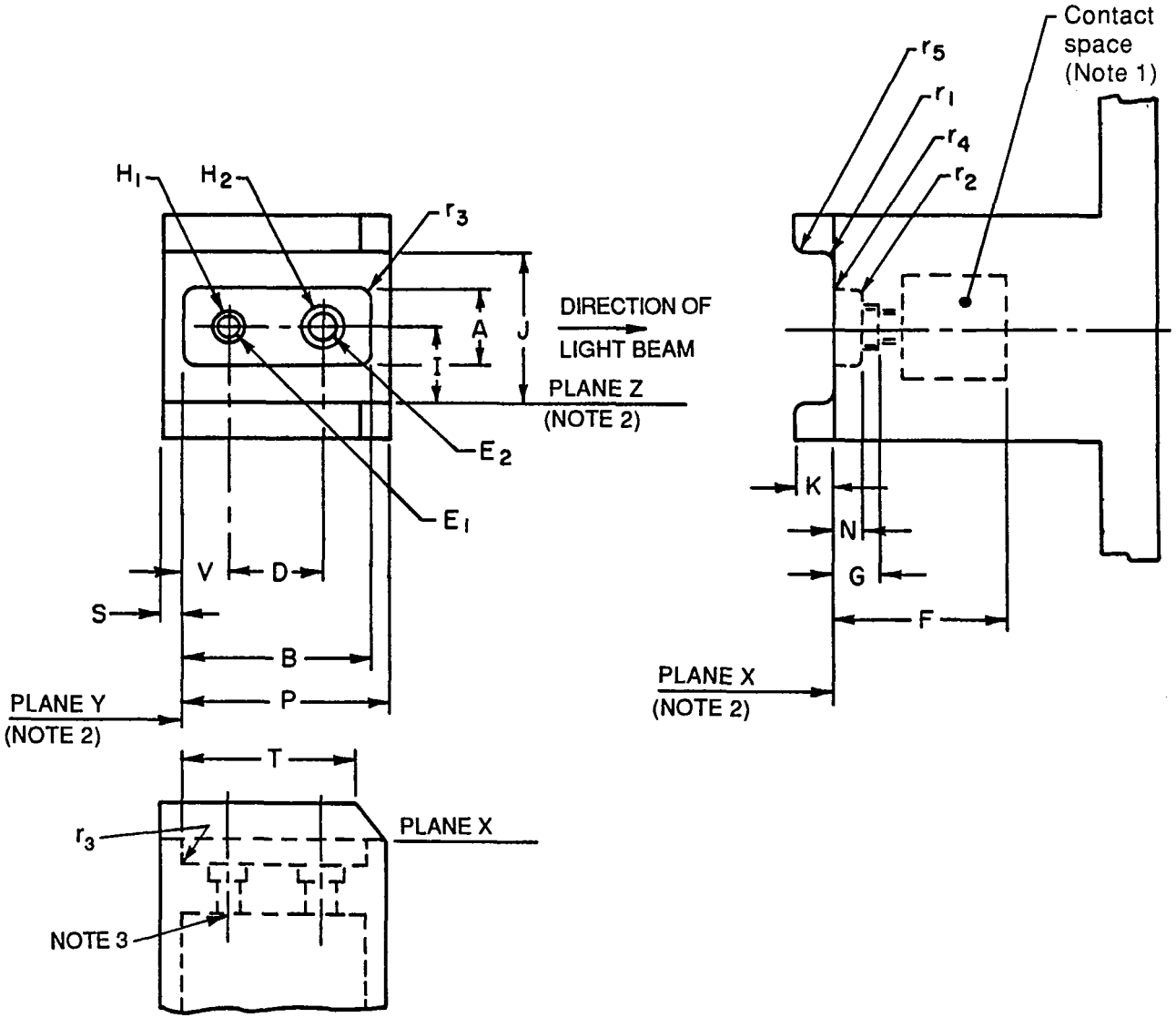

Copyright National Electrical Manufacturers Association
Provided by IHS under license with NEMA
No reproduction or networking permitted without license from IHS
Not for Resale

ANSI C81.62-1991
Std Sheet 2-356-1

Reference	Standard dimensions in			Nearest metric equivalent mm		
	Min	Nom	Max	Min	Nom	Max
A	0.284	–	0.300	7.21	–	7.62
B	0.630	–	–	16.00	–	–
D (Note 4)	–	0.312	–	–	7.92	–
E_1 (Note 5)	0.110	–	0.120	2.79	–	3.05
E_2 (Note 5)	0.147	–	–	3.73	–	–
F	0.577	–	–	14.66	–	–
G (Note 5)	0.168	–	–	4.27	–	–
H_1 (Note 5)	0.147	–	–	3.73	–	–
H_2 (Note 5)	0.192	–	–	4.88	–	–
I (Note 4)	–	0.283	–	–	7.19	–
J	0.565	–	0.568	14.35	–	14.43
K	0.127	–	0.167	3.23	–	4.24
N	0.125	–	–	3.17	–	–
P (Note 6)	0.666	–	0.706	16.92	–	17.93
S	0.045	–	–	1.14	–	–
T (Note 6)	–	–	0.598	–	–	15.19
V	0.159	–	0.163	4.04	–	4.14
r_1	–	–	0.044	–	–	1.12
r_2	–	–	0.019	–	–	0.48
r_3	–	–	0.055	–	–	1.40
r_4	–	–	0.050	–	–	1.27
r_5	0.016	–	0.046	0.41	–	1.17

NOTES

1 Holder contacts shall be designed to accommodate the full range of pin diameters. In addition, the positions of these contacts must float because the base position is designed to be strictly controlled by the three reference planes.

2 Planes x, y, and z are theoretical; they establish an orthogonal framework for positioning the three mounting surfaces x, y, and z of the base. At least three points of surface x shall be in plane x to provide mechanically stable contact. Simultaneously, at least two points of surface z shall be in plane z, and at least one point of surface y shall be in plane y to provide mechanically stable contact. Points on surfaces x, y, and z shall not penetrate their corresponding planes. Corner radii adjacent to surface x, y, and z do not constitute those surfaces and may therefore penetrate the planes.

3 For the G7.9 version, the barrier layer which fixes the hole size E_1 shall be of sufficient strength to withstand attempted insertion of the E_2 base pin.

4 Dimensions D and I are checked by the holder gauge. Dimension I of the holder is larger than that of the base.

5 Dimensions G, H_1 and H_2 describe a clearance volume for a portion of the pins not included in the diameter limits of dimensions E_1 and E_2.

6 Dimensions P and T define a clearance dimension to prevent interference with seating some lamps.

7 Auxilliary lamp retention and positioning devices shall be provided to urge surfaces x and z of the base into contact with surface x (3 point contact) and z (2 point contact) of the holder.

8 Contact depth shall be sufficient to prevent electrical contact with an E_2 base pin in an E_1 hole.

Copyright National Electrical Manufacturers Association
Provided by IHS under license with NEMA
No reproduction or networking permitted without license from IHS
Not for Resale

Gauging

"Go" Gauges 3-359: It shall be possible to insert the maximum and minimum ends of the appropriate gauge 3-359 into the lampholder until surface X of the gauge is in contact with reference plane x of the lampholder. It shall also be possible to press the gauge surfaces y and z against the corresponding surfaces of the holder when either end of the gauge is in place.

Minimum Contact Retention Force gauge 3-362: With the proper end of the retention gauge inserted into the proper lampholder contacts and with the lampholder held recess-down in a vertical position, the gauge shall not fall out by its own weight.

Base

See ANSI C81.61, Standard Sheet 1-356.

Copyright National Electrical Manufacturers Association
Provided by IHS under license with NEMA
No reproduction or networking permitted without license from IHS
Not for Resale

LAMPHOLDER

DOUILLE

GR8

Dimensions in millimetres • Dimensions en millimètres

The drawing is intended only to illustrate the dimensions essential for interchangeability.
Le dessin a pour seul but d'illustrer les dimensions essentielles pour l'interchangeabilité.

For details of cap GR8, see sheet 7004-68.
Pour les détails du culot GR8, voir feuille 7004-68.

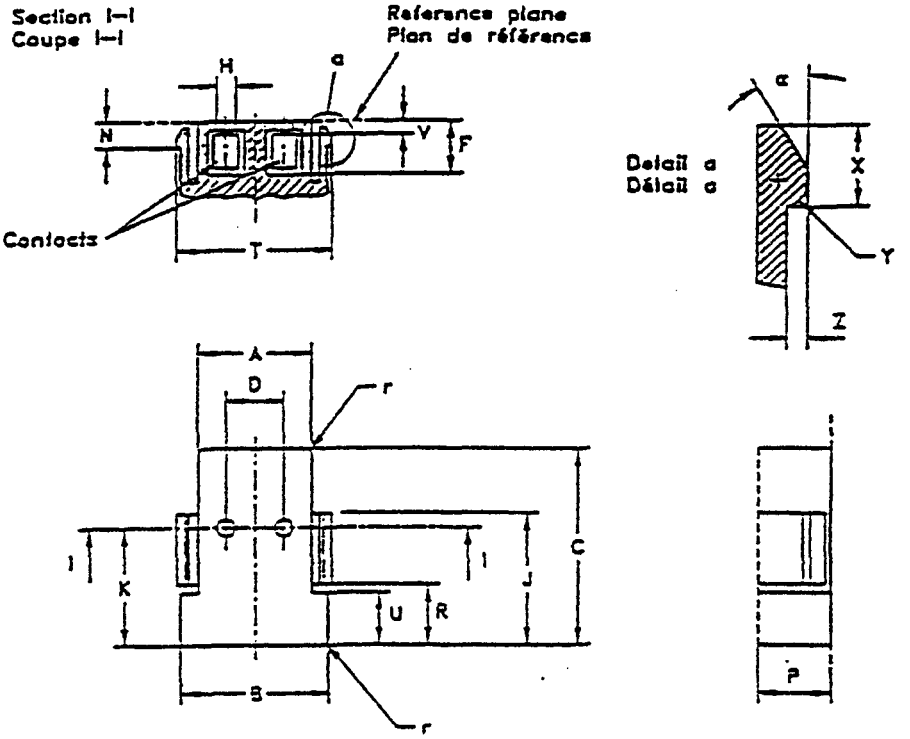

Dimension	Min.	Max.
A	15,1	15,3
B	19,9	20,1
C	–	28,5
D	8,0	
F	7,77	–
H	3,7	–
J	–	18,8
K	15,9	16,1
N	3,2	3,4
P	10,0	–
R	9,1	–
T (1)	21,7	21,9
T (2)	–	20,0
U	–	7,8
V	–	2,5
X	–	3,1
Y	0,9	1,1
Z	0,7	–
r	0,9	–
α	30°	

(1) Catches at rest position.
(2) Catches deflected to allow lamp insertion.

(1) Cliquets en position de repos.
(2) Cliquets repoussés pour permettre l'introduction de la lampe.

GAUGING: Lampholders GR8 shall fulfil the tests of the gauges shown on sheets 7006-68C and 7006-68D.

VERIFICATION: Les douilles GR8 doivent satisfaire aux essais avec les calibres selon les feuilles 7006-68C et 7006-68D.

Copyright National Electrical Manufacturers Association
Provided by IHS under license with NEMA
No reproduction or networking permitted without license from IHS
Not for Resale

G9.5 Lampholders

The designation assigned to this lampholder by the International Electrotechnical Commission (IEC) is G9.5

This standard sheet is equivalent to IEC Publication 61.

The drawing is intended only to indicate the dimensions to be controlled.

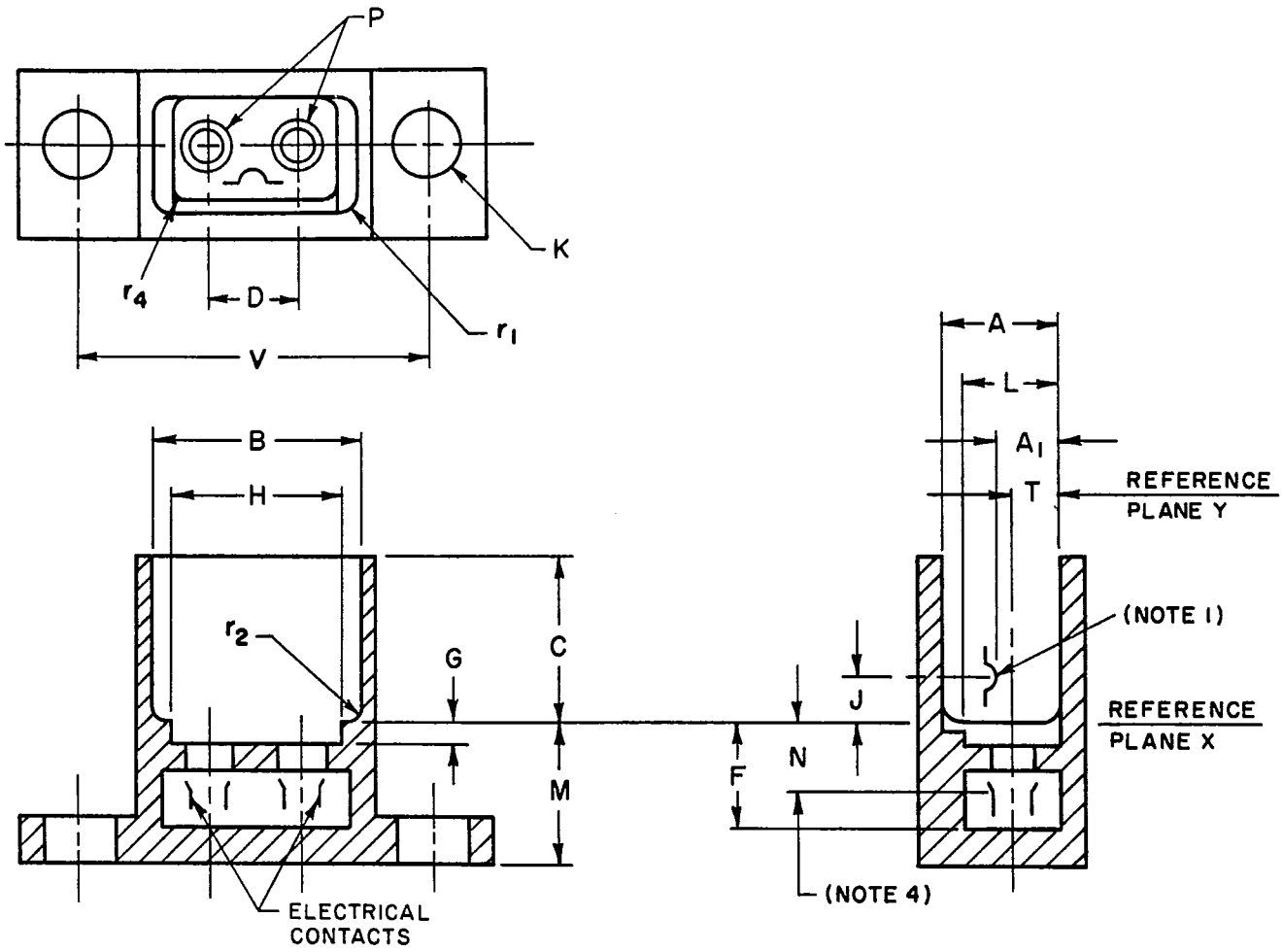

Copyright National Electrical Manufacturers Association
Provided by IHS under license with NEMA
No reproduction or networking permitted without license from IHS
Not for Resale

ANSI C81.62-1991
Std Sheet 2-368-1

Reference	Standard dimensions in			Nearest metric equivalent mm		
	Min	Nom	Max	Min	Nom	Max
A	0.387	–	–	9.38	–	–
A_1	0.315	–	0.345	8.00	–	8.76
B	0.945	–	0.960	24.00	–	24.38
C	0.600	–	0.675	15.24	–	17.14
D (Note 4)	–	0.375	–	–	9.53	–
F	0.452	–	–	11.48	–	–
G (Note 2)	0.121	–	–	3.07	–	–
H (Note 2)	0.745	–	0.755	18.92	–	19.18
J	0.258	–	0.279	6.55	–	7.09
K	–	0.193	–	–	4.90	–
L (Note 2)	0.370	–	–	9.40	–	–
M	0.624	–	0.632	15.85	–	16.05
N (Note 3)	–	–	0.240	–	–	6.10
P	0.183	–	–	4.65	–	–
T (Note 4)	–	0.188	–	–	4.78	–
V	–	1.562	–	–	39.67	–
r_1	–	–	0.110	–	–	2.79
r_2	–	–	0.020	–	–	0.51
r_4	–	–	0.040	–	–	1.02

NOTES

1 Lamp retaining spring with pressure point taking the shape of a spherical segment having a radius of 0.012 inch (2.59 mm) minimum and 0.102 inch (2.84 mm) maximum and with a minimum height of 0.030 inch (0.76 mm).

2 Dimensions G, H, and L represent dimensions for the insulator of the base.

3 N is measured to the top of effective contact area.

4 The contacts must accommodate pins of maximum and minimum diameters and a location tolerance of ±0.029 inch (0.74 mm).

5 The current-carrying capacity of the contacts shall be at least 10 amperes.

Copyright National Electrical Manufacturers Association
Provided by IHS under license with NEMA
No reproduction or networking permitted without license from IHS
Not for Resale

Gauging
"Go" Gauge 3-372: It shall be possible to insert, in turn, each end of the gauge into the holder until surface x is in contact with reference plane x of the lampholder. In each case, the surface x opposite to the reference plane shall be parallel with or project beyond the top edges of the lampholder.

Minimum Contact Retention Force Gauge 3-377: This gauge shall be inserted into each of the lampholder contacts so that surface x is in contact with reference place x of the lampholder. The gauge shall not fall out by its own weight with the lampholder held recess-down in a vertical position.

See ANSI C81.63 for gauges.

Base
See ANSI C81.61, Standard Sheet 1-368.

Copyright National Electrical Manufacturers Association
Provided by IHS under license with NEMA
No reproduction or networking permitted without license from IHS
Not for Resale

GY9.5 and GZ9.5 Lampholders

The designations assigned to these lampholders by the International Electrotechnical Commission (IEC) are GY9.5 and GZ9.5.

This standard is equivalent to IEC Publication 61.

Lampholders GY9.5 and GZ9.5 differ only in respect to dimensions B and J. The GY9.5 is intended for applications over 700 watts and the GZ9.5 is intended for applications up to 700 watts.

The drawing is intended only to indicate the dimensions to be controlled.

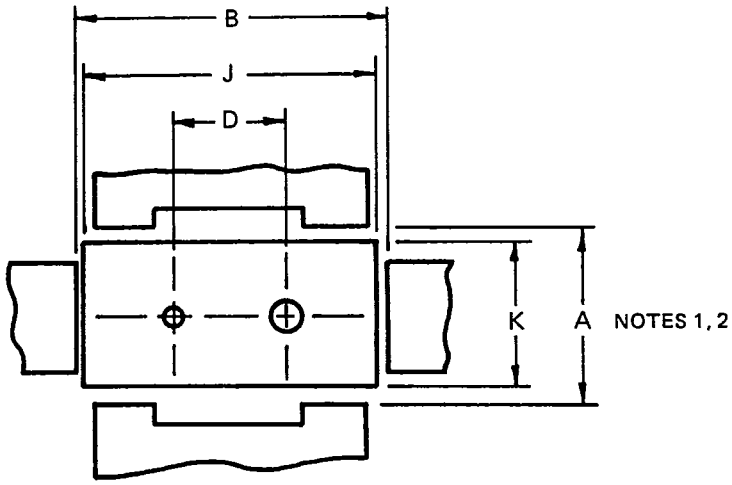

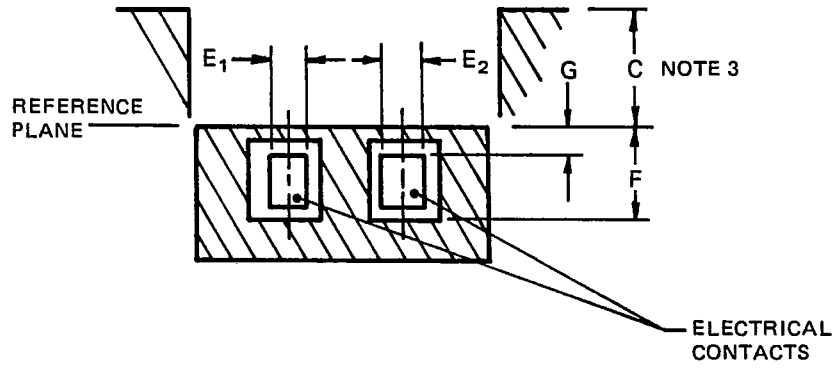

Copyright National Electrical Manufacturers Association
Provided by IHS under license with NEMA
No reproduction or networking permitted without license from IHS
Not for Resale

Reference	Standard dimensions in			Nearest metric equivalent mm		
	Min	Nom	Max	Min	Nom	Max
A (Note 3)	0.450	–	–	11.43	–	–
B (GY9.5)	1.200	–	–	30.48	–	–
B (GZ9.5)	0.970	–	1.050	24.64	–	26.67
C	–	–	0.600	–	–	15.24
D	–	0.375	–	–	9.53	–
E_1 (Note 5)	0.104	–	0.114	2.64	–	2.90
E_2 (Note 5)	0.139	–	0.149	3.53	–	3.78
F	0.342	–	–	8.69	–	–
G (Note 4)	–	–	0.150	–	–	3.81
J (Note 5) (GY9.5)	1.060	–	–	26.92	–	–
J (Note 5) (GZ9.5)	0.835	–	–	21.21	–	–
K (Note 5)	0.400	–	–	10.16	–	–

NOTES

1 When a lamp retention system is provided, the retainers shall engage the projections on the side of the base. This is checked by the lampholder "Go" gauge shown on ANSI C81.63 Standard Sheet 3 -373.

2 Dimension A does not apply to the area within which lamp retainers may be located.

3 Lampholders need not have any parts above the reference plane. When such parts exist, however, they shall comply with dimensions A, B, and C and shall be compatible with the requirements of the lampholder "Go" gauge shown on ANSI C81.63 Standard Sheet 3-373.

4 For design purposes only.

5 Dimensions J and K define the minimum flat area for base seating.

Gauging

"Go" Gauges 3-373: It shall be possible to insert, in turn, each end of the gauge into the lampholder until surfaces x and y, respectively, are in contact with the intended seating surface.

Verify that surface y has not passed beyond the seating surface on either side. In each case, the surface w shall then be coplanar with or project beyond the edges of any shroud or aperture provided for the body of the base.

Copyright National Electrical Manufacturers Association
Provided by IHS under license with NEMA
No reproduction or networking permitted without license from IHS
Not for Resale

When the surfaces x and y are in contact with the seating surface, the retainers of any retention system that may be provided shall effectively engage the surfaces of the simulated retainer projections adjacent to the pins.

"Not-go" Gauge 3-374: Each pin opening in a holder shall be checked. The pins of the gauge shall not enter the holder enough to engage the electrical contacts.

See ANSI C81.63 for gauges.

Base
See ANSI C81.61, Standard Sheet 1-369.

Copyright National Electrical Manufacturers Association
Provided by IHS under license with NEMA
No reproduction or networking permitted without license from IHS
Not for Resale

LAMPHOLDER

DOUILLE

GR10q

Dimensions in millimetres - Dimensions en millimètres

The drawing is intended only to illustrate the dimensions essential for interchangeability.
Le dessin a pour seul but d'illustrer les dimensions essentielles pour l'interchangeabilité.

For details of cap GR10q, see sheet 7004-77.
Pour les détails du culot GR10q, voir feuille 7004-77.

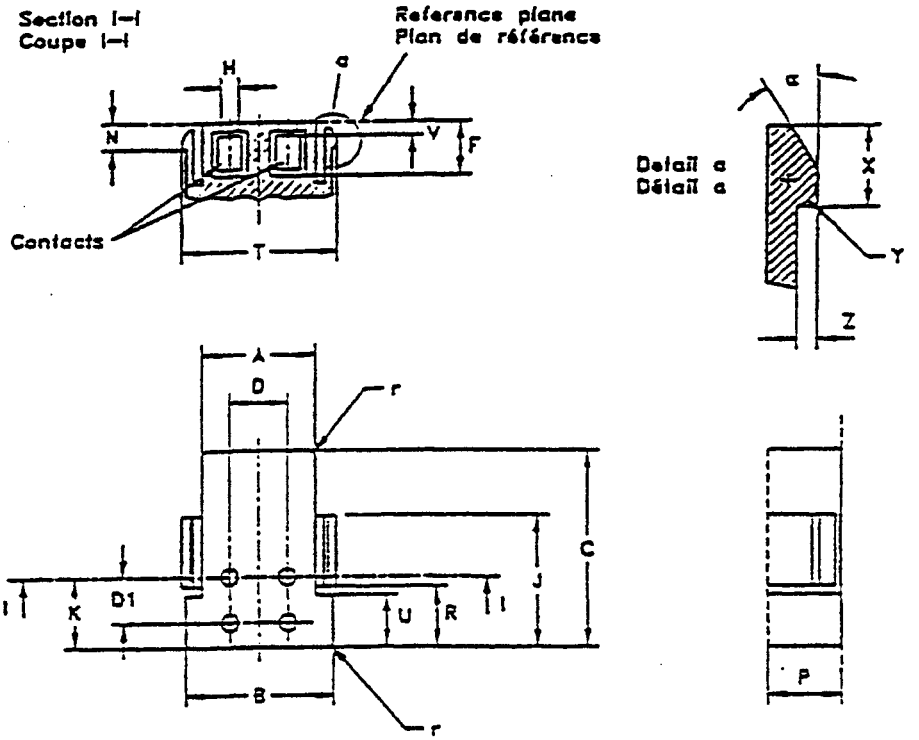

Dimension	Min.	Max.
A	15.1	15.3
B	19.9	20.1
C	–	28.5
D	8.0	
D1	6.35	
F	7.77	–
H	3.7	–
J	–	18.8
K	9.7	9.9
N	3.2	3.4
P	10.0	–
R	9.1	–
T (1)	21.7	21.9
T (2)	–	20.0
U	–	7.8
V	–	2.5
X	–	3.1
Y	0.9	1.1
Z	0.7	–
r	0.9	–
α	30°	

(1) Catches at rest position.
(2) Catches deflected to allow lamp insertion.

(1) Cliquets en position de repos.
(2) Cliquets repoussés pour permettre l'introduction de la lampe.

GAUGING: Lampholders GR10q shall fulfil the tests of the gauges shown on sheets 7006-77B and 7006-77C.

VERIFICATION: Les douilles GR10q doivent satisfaire aux essais avec les calibres selon les feuilles 7006-77B et 7006-77C.

Copyright National Electrical Manufacturers Association
Provided by IHS under license with NEMA
No reproduction or networking permitted without license from IHS
Not for Resale

2G11 Lampholder

The designation assigned to this lampholder by the International Electrotechnical Commission (IEC) is 2G11

This standard sheet is equivalent to IEC 61.

General design features

Lampholders 2G11 shall accommodate lamps via either of three insertion methods:

- axial motion
- axial and lateral motions, in sequence
- axial and angular motion

It is not intended that lampholders of this type provide the entire lamp-holding function. Supplementary lampholding and retention devices are necessary. To limit axial displacement of a lamp, devices may utilize notches or other established features of a base. For proper positioning and circuit application of a lamp, a device to support the lamp-bulb is required. Such a device shall be shaped and located with reference to the relevant lamp standard.

The drawing is intended only to indicate the dimensions to be controlled.

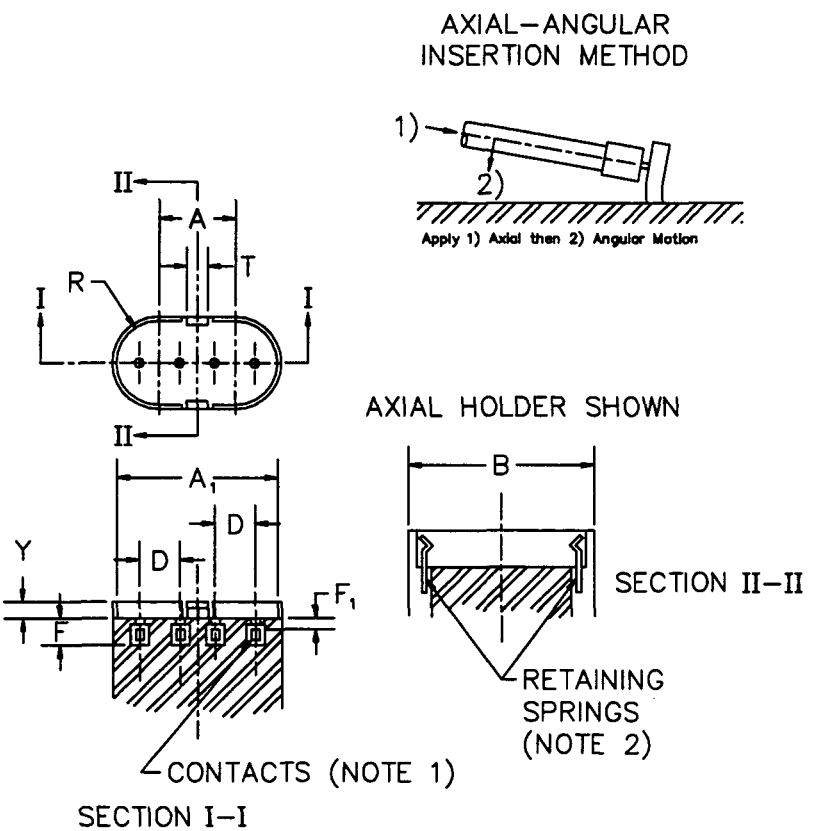

Copyright © 1997 by National Electrical Manufacturers Association
1300 North 17th Street, Suite 1847, Rosslyn, VA 22209

First Edition
May 1997

Copyright National Electrical Manufacturers Association
Provided by IHS under license with NEMA
No reproduction or networking permitted without license from IHS
Not for Resale

DIMENSION	MIN	NOM	MAX
A	-	22	-
A_1 (Note 3)	44.2	-	-
B (Note 3)	23.9	-	-
D	-	11	
F	6.9	-	-
F_1 (Note 4)	-	-	2.6
R (Note 5)	-	B/2	-
T (Note 2)	-	-	6.0
Y	5.0 (u.c.)	-	12.5

Notes
1 The contacts of a holder shall be self-adjusting as to contact making.
2 The springs, if used for retention, should be of a material which ensures that the retention forces are not substantially changed throughout the life of the lampholder. Requirements and tests are under consideration.
3 These dimensions define the minimum free space to be provided for smooth acceptance of the base.
4 For design purposes only, not to be gauged.
5 The value of Dimension R applies to lampholders intended for axial insertion. For axial-lateral and axial-angular holders this value may change accordingly

Protection against electrical shock shall be provided when the holder is installed as in normal use: without a lamp, with the appropriate lamp in place and during insertion or removal of the lamp. The insertion of only one pin of the lamp to the first point of contact shall be prevented.

Compliance to the safety requirements shall be checked by means of the IEC standard test finger. (See IEC 529, figure 1). This test finger shall be applied in every possible position with a force not exceeding 10 N and with an electrical indicator circuit being used to show contact.

Gauging

Gauge "A" for Maximum Insertion and Withdrawal Force, Gauge 3-396 and Gauge "B" for Maximum Insertion Force, Gauge 3-397. Gauge "A" and Gauge "B" shall be inserted in the manner appropriate for the holder under test, with a force not exceeding 50 N (under consideration).

Copyright © 1997 by National Electrical Manufacturers Association
1300 North 17th Street, Suite 1847, Rosslyn, VA 22209

First Edition
May 1997

Copyright National Electrical Manufacturers Association
Provided by IHS under license with NEMA
No reproduction or networking permitted without license from IHS
Not for Resale

It shall be possible to withdraw gauges "A" and "B" in the appropriate manner, axially or laterally, with a force not exceeding 40 N (under consideration)

It shall not be possible to withdraw gauges "A" and "B" from the seated position in an axial-lateral or axial-angular type holder, with axial motion only with a force of less than 15 N under consideration).

Gauge "C" for Minimum Retention Force. Gauge 3-398: The force required to withdraw Gauge C, in the appropriate manner, axially or laterally, shall not be less than 15 N (under consideration). Furthermore, it shall not be possible to withdraw this gauge from the seated position in an axial-lateral or axial-angular type holder, with axial motion only with a force of less than 15 N (under consideration).

Single-pin Gauge "D" for Maximum Withdrawal Force on Contacts, Gauge 3-399: The force required to withdraw Gauge "D" from a fully seated position, in the appropriated manner - axially or laterally - shall not exceed 6 N (under consideration).

Single-pin Gauge "E" for Minimum Retention Force on Contacts, Gauge 3-400: The force required to withdraw Gauge "E" from a fully seated position, in the appropriate manner - axially or laterally - shall not be less than 2.5 N (under consideration). For holders with retaining springs, this force shall be at least 0.5 N (under consideration). Furthermore, it shall not be possible to withdraw this gauge from a seated position in an axial-lateral type holder with axial motion only of a force less than either 2.5 N (under consideration) or 0.5 N (under consideration) for a holder with retaining springs, as appropriate.

See ANSI C81.63 for gauges.

Base

See ANSI C81.61. Standard Sheet 1-393.

Copyright © 1997 by National Electrical Manufacturers Association
1300 North 17th Street, Suite 1847, Rosslyn, VA 22209

Copyright National Electrical Manufacturers Association
Provided by IHS under license with NEMA
No reproduction or networking permitted without license from IHS
Not for Resale

Copyright © 1997 by National Electrical Manufacturers Association
1300 North 17th Street, Suite 1847, Rosslyn, VA 22209

First Edition
May 1997

Copyright National Electrical Manufacturers Association
Provided by IHS under license with NEMA
No reproduction or networking permitted without license from IHS

Not for Resale

G13 Medium Bipin Fluorescent Lampholder

The designation assigned to this lampholder by the International Electrical Commission (IEC) is G13.

This standard sheet is equivalent to IEC Publication 61.

The drawing is intended only to indicate the dimensions to be controlled.

Specific types of lampholders

Inflexible (rigidly fixed) Lampholders
Inflexible lampholders are a pair of lampholders intended for rigid mounting and in which no axial movement of the contacts is provided or is needed, either for the insertion and removal of the lamp or as compensation for variation in lamp lengths.

This type of lampholder includes:

- those that require a turning motion for the insertion of a lamp; and
- those in which insertion of the lamp is accomplished by lateral motion at right angles to the plane of the base pins.

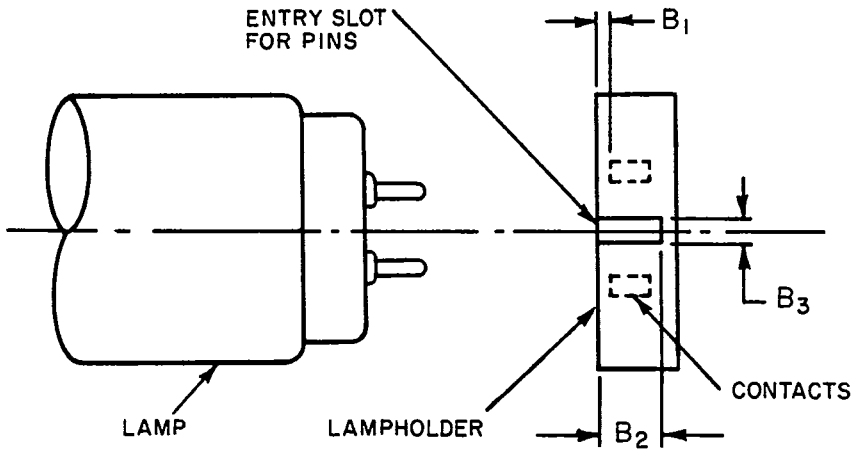

B_1 – The distance between the live contacts and the lampholder face shall not be greater than 0.100 inch (2.54 mm).

B_2 – The entry slots of inflexible lampholders shall have a depth not less than 0.250 inch (6.35 mm). [1)]

B_3 – The width of the entry slots shall be great enough to accommodate the lamp-base pins with allowance for misalignment both of the lamp bases (with respect to each other) and of the lampholders. This requirement applies only to the type of lampholder in which the lamp is rotated during insertion into the holder. The gauge shown on ANSI C81.63, Standard Sheet 3-417 has the base pins at its two ends so arranged as to simulate a lamp with the maximum rotational misalignment of pins.

1) IEC Publication 61 requires a minimum depth of 0.290 inch (7.35 mm).

Copyright National Electrical Manufacturers Association
Provided by IHS under license with NEMA
No reproduction or networking permitted without license from IHS
Not for Resale

Flexible lampholders

Flexible lampholders are a pair of lampholders in which the base of each holder is rigidly mounted in the luminaire but which has one or both of the lampholders so designed as to allow axial movements of the contacts to provide compensation for variations in lamp lengths and, where necessary, to permit insertion and removal of the lamp.

NOTE – Contact may be made on either the end or the sides of the base pins.

Flexibly mounted lampholders

Flexibly mounted lampholders are a pair of lampholders that do not in themselves provide for any axial movement of the contact system but that are intended to be mounted in a luminaire in a specified manner so that the combination provides the necessary axial movement of the contact system.

NOTE – Lampholders of this type may or may not be suitable for rigid mounting also. The manufacturer's instructions should state clearly whether both or only one of the methods of mounting are intended.

Lampholders for U-shaped Lamps

Details for 2G13 lampholders appear on Standard Sheet 2-420.

NOTES

1 As a preconditioning cycle, there shall be one clockwise and one counterclockwise rotation or one insertion and withdrawal routine of each test device before the initial measurement is taken.

2 If the holders being tested have push-in lead-wire terminals related to the spring action of the contacts, a single No. 18 AWG solid wire should be inserted into each terminal before any test is made.

Clearance of live parts

When no lamp is in place, a test probe having a hemispherical end with a radius of 0.205 in (5.21 mm) shall not be able to contact live metal parts.

Manufacturer's mounting instructions

These are instructions supplied by the lampholder manufacturer or responsible vendor in order to ensure correct mounting and operation of the lampholder and which shall contain at least the following information:

- method of mounting,
- mounting distance, with tolerance or reference to standard sheets,
- which lampholders should be used as a pair,
- allowable angle of displacement of the pair of lampholders, and
- required mounting plate thickness, if the lampholder is designed for screwless mounting.

NOTE – The above information might be part of the manufacturer or responsible vendor's catalog.

Push-in terminals

G13 lampholders employing push-in type terminals shall be designed to accept connecting wire with strip length ranging from a minimum of 0.359 in (9.13 mm) to a maximum of 0.453 in (11.5 mm).

Copyright National Electrical Manufacturers Association
Provided by IHS under license with NEMA
No reproduction or networking permitted without license from IHS
Not for Resale

Gauging
Double-ended "Go" Gauges, 3-417: It shall be possible to insert and remove, without difficulty, both Gauge I and Gauge II of 3-417 in a combined pair of flexible or inflexible lampholders mounted at the minimum tolerance according to the manufacturer's instructions.

Double-ended Gauges for Testing Contact-making, gauges 3-418: When inserting Gauges III, IV, and V of 3-418 into a pair of flexible or inflexible lampholders mounted at the maximum tolerance according to the manufacturer's instructions, the two test lamps shall light.

NOTE – When testing a combined pair of lampholders in a luminaire, the value of dimension B shall be equal to dimension B minimum of the related lamp, with a tolerance of –0.002 inch (–0.05 mm).

See ANSI C81.63 for gauges.

General requirements

Lamp Retention Requirements, Inflexible Lampholders
The following requirements cover two types of lampholders: those requiring rotation of the lamp during insertion and those requiring lateral push-in insertion motion. Test devices are to be applied to an individual lampholder to evaluate the maximum torque or force upon insertion and removal, and the minimum G13 torque or force upon removal. These test devices are specified on Standard Sheet 3-414, (ANSI C81.63) as Device A, B, and C.

The following are the requirements pertaining to retention:

a) All lampholders shall have detents or other similar arrangements of contact springs (or other lampholder parts) to give a definite indication of when a lamp has reached its normal seating position.

b) Lampholders for rotational motion, with outside contacts:

1) On the initial cycle, the torque required to properly insert and remove Device A and Device B shall not exceed 6.0 lbf-in (0.68 N-m). See note 1.

2) Simultaneously, the torque required to rotate each test device out of its seated position shall not be less than 1.0 lbf-in (0.11 N-m). As a future objective, the value 1.25 lbf-in (0.14 N-m) is under consideration.

c) Lampholders for lateral push-in motion:

1) On the initial cycle, the force required to insert and remove Device A, Device B, and Device C shall not exceed 12 lbf-in (53.4 N-m). See note 1.

2) Simultaneously, the force required to withdraw each test device from its normal seated position shall not be less than 3 lbf-in (13.3 N-m).

Base
See ANSI C81.61, Standard Sheet 1-406.

Copyright National Electrical Manufacturers Association
Provided by IHS under license with NEMA
No reproduction or networking permitted without license from IHS
Not for Resale

2G13 U-SHAPED FLUORESCENT LAMPHOLDER

The designation assigned to this lampholder, in accordance with the coding system of the International Electrotechnical Commission (IEC), is 2G13.

This standard sheet is equivalent to IEC 61.

The drawing is intended only to indicate the dimensions to be controlled.

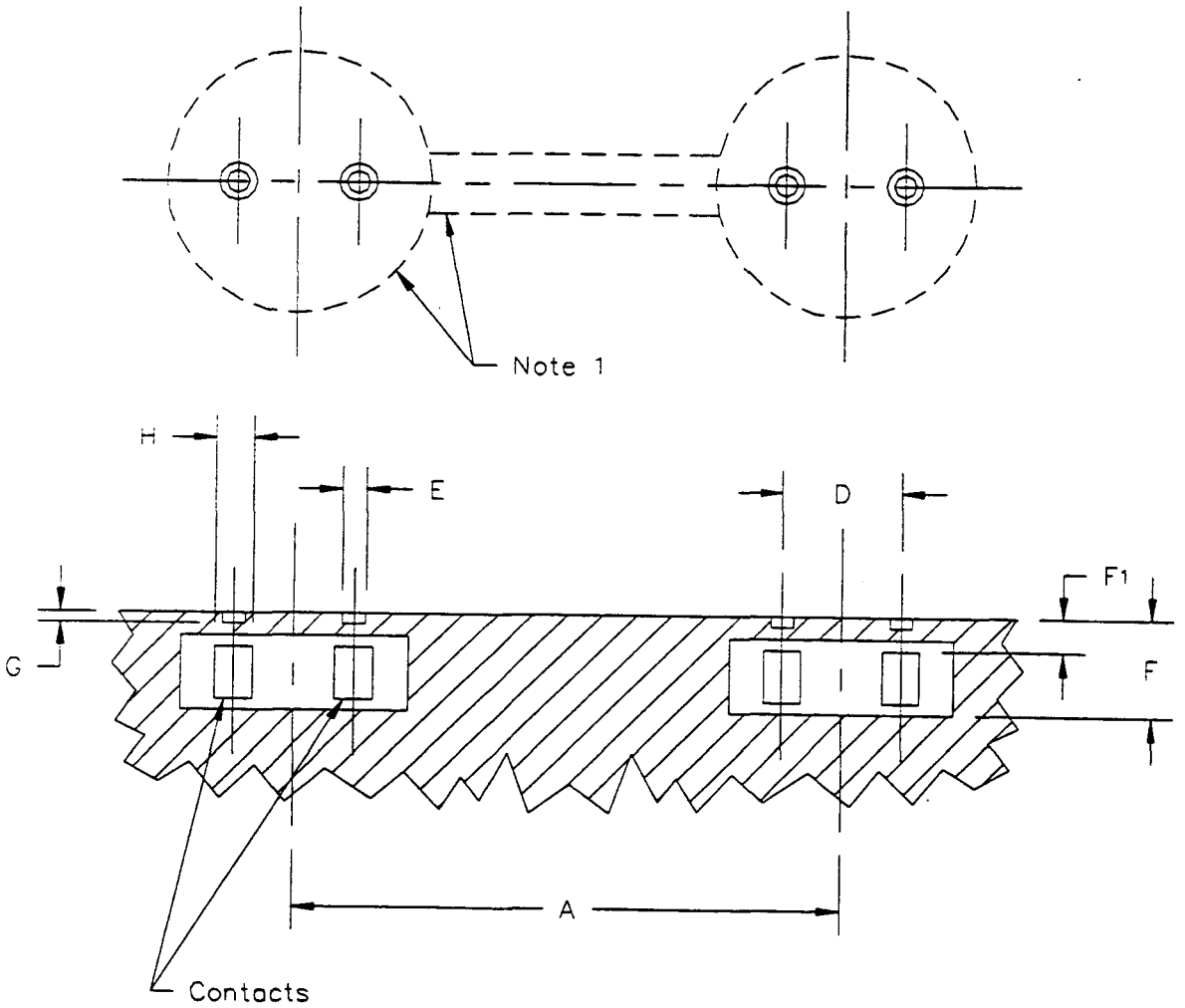

Axial Insertion Type Lampholder

Copyright © 1998 by National Electrical Manufacturers Association
1300 North 17th Street, Suite 1847, Rosslyn, VA 22209

First Edition
October 1998

Copyright National Electrical Manufacturers Association
Provided by IHS under license with NEMA
No reproduction or networking permitted without license from IHS
Not for Resale

2G13-41 (1 5/8 in. spacing)

	Standard Dimensions (inches)			Nearest Metric Equivalent (millimeters)		
Reference	Min.	Nom.	Max.	Min.	Nom.	Max.
A	--	1.625	--	--	41	--
D	--	0.500	--	--	12.70	--
F	0.301	--	--	7.65	--	--
F_1	--	--	0.10	--	--	2.5

2G13-92 (3 5/8 in. spacing)

	Standard Dimensions (inches)			Nearest Metric Equivalent (millimeters)		
Reference	Min.	Nom.	Max.	Min.	Nom.	Max.
A	--	3.625	--	--	92	--
D	--	0.500	--	--	12.70	--
F	0.301	--	--	7.65	--	--
F_1	--	--	0.10	--	--	2.5

2G13-152 (6 in. spacing)

	Standard Dimensions (inches)			Nearest Metric Equivalent (millimeters)		
Reference	Min.	Nom.	Max.	Min.	Nom.	Max.
A	--	6.00	--	--	152	--
D	--	0.500	--	--	12.70	--
F	0.301	--	--	7.65	--	--
F_1	--	--	0.10	--	--	2.5

NOTES:

1 Dashes indicate free space to be reserved for the lamp base that is to be checked by means of the gauge shown on ANSI C81.63, Standard Sheet 3-423.

2 Dimensions E, G, and H are checked by means of the gauge shown on ANSI C81.63, Standard Sheet 3-423.

3 The force required to axially withdraw each test device from its normal seated position shall not be less than 13.3 N (3 lbs.).

Copyright © 1998 by National Electrical Manufacturers Association
1300 North 17th Street, Suite 1847, Rosslyn, VA 22209

First Edition
October 1998

Copyright National Electrical Manufacturers Association
Provided by IHS under license with NEMA
No reproduction or networking permitted without license from IHS
Not for Resale

General Design Requirements

Lampholders intended for use with U-shaped fluorescent lamps shall be so designed as to take into account the allowable tolerance in the center-to-center distance between the two legs of the lamp. In some cases, it may also be desirable to provide for mounting arrangements of the holder in the luminaire so as to permit adjustment to fit different nominal leg spacings currently used in standard U-shaped fluorescent lamps.

Auxiliary Lamp Holding Devices

It is not intended that lampholders of this type provide the entire holding function. Supplementary lamp holding or retention devices may be necessary. Such devices shall be shaped and positioned with reference to the applicable lamp data sheet in *American National Standard for Dimensional and Electrical Characteristics of Fluorescent Lamps*, ANSI C78.1. The base standard sheet, 1-420, does not allow use of the leg brace for any holding purpose.

Clearance For Life Parts

When no lamp is in place the lampholder shall meet the requirements of UL 542.

Gauging

2G13 lampholders for U-shaped lamps shall be checked with the gauges specified on Standard Sheets 3-423 and 3-424, in that order.

"Go" Gauge 3-423: It shall be possible to insert each end of the gauge into the lampholder until surface X is in contact with the face of the holder. In each test position, electrical continuity shall be indicated.

Gauge for Testing Contact Making, Gauge 3-424: In all possible positions of the gauge, while surface X of the gauge is in contact with the face of the lampholder, contact as indicated on the electrical continuity circuit shall be maintained between the gauge pins and the holder contacts.

See ANSI C81.63 for gauges.

Copyright © 1998 by National Electrical Manufacturers Association
1300 North 17th Street, Suite 1847, Rosslyn, VA 22209

First Edition
October 1998

Copyright National Electrical Manufacturers Association
Provided by IHS under license with NEMA
No reproduction or networking permitted without license from IHS
Not for Resale

Lamp Retention Devices

Lampholders for U-shaped lamps shall meet the lamp retention requirements given below. The values given apply to a single test device applied with lateral motion in an individual G13 section of the holder. Lampholders 2G13 shall be checked with the test device specified on ANSI C81.63, Standard Sheet 3-424.

a) There shall be a detent or other similar arrangement of the contact springs (or other lampholder parts) to give a definite indication of when the lamp has reached its normal seating position.

b) The force required to withdraw the test device from its normal seating position shall not be less than 3 lbf (13.3 N) and not more than 12 lbf (53.4 N).

Base

See ANSI C81.61, Standard Sheet 1-420.

Copyright © 1998 by National Electrical Manufacturers Association
1300 North 17th Street, Suite 1847, Rosslyn, VA 22209

First Edition
October 1998

Copyright National Electrical Manufacturers Association
Provided by IHS under license with NEMA
No reproduction or networking permitted without license from IHS
Not for Resale

G16d Mogul End-Prong Connector

The designation assigned to this connector, in accordance with the coding system of the International Electrotechnical Commission (IEC), is G16d.

At the time of issuance of this standard, there was no comparable IEC standard in existence.

The drawing is intended only to indicate the dimensions to be controlled.

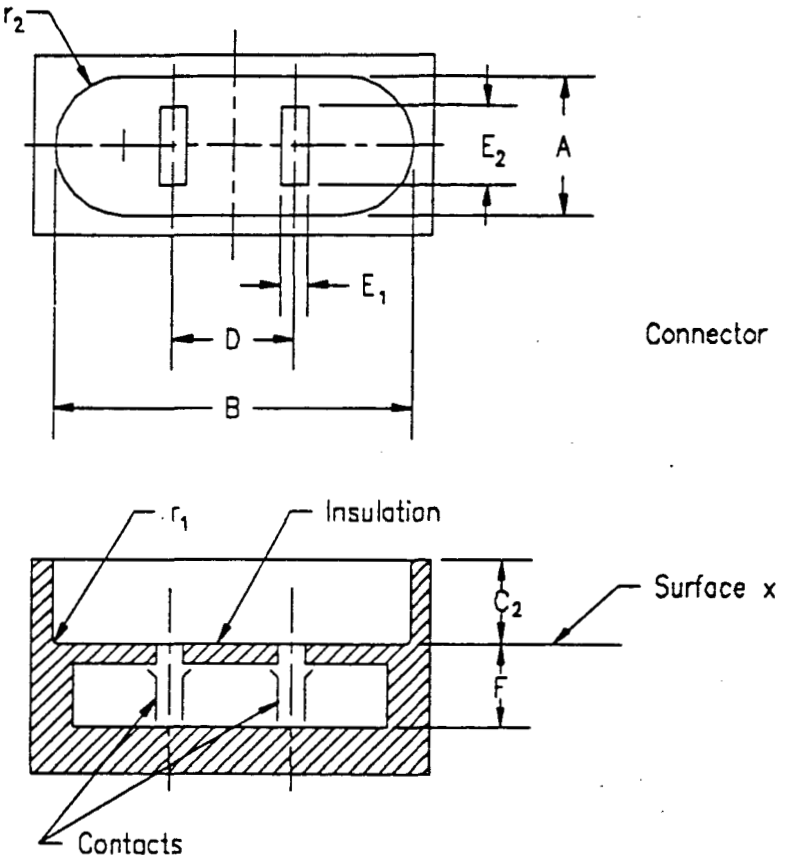

Copyright © 1997 by National Electrical Manufacturers Association
1300 North 17th Street, Suite 1847, Rosslyn, VA 22209

First Edition
December 1997

Copyright National Electrical Manufacturers Association
Provided by IHS under license with NEMA
No reproduction or networking permitted without license from IHS
Not for Resale

	Standard Dimensions (in)			Nearest Metric Equivalent (mm)		
Reference	Min	Nom	Max	Min	Nom	Max
A (Note 1)	0.780	-	0.880	19.81	-	22.35
B (Note 1)	2.115	-	2.145	53.72	-	54.49
C_2	0.420	-	0.460	10.66	-	11.69
D	-	0.656	-	-	16.66	-
E_1	0.054	-	0.084	1.37	-	2.14
E_2	0.333	-	0.362	8.45	-	9.20
F	0.544	-	-	13.81	-	-
r_1	-	-	0.036	-	-	0.91
r_2	-	-	0.355	-	-	9.02

Notes

1. Dimensions A and B apply on surface x, at the bottom of the connector cavity. The sides of the cavity may flare outward for ease of installation. These dimensions provide additional clearance (to allow convection cooling).
2. This connector performs the function of electrical connection only; it is not intended to provide mechanical support to a lamp.

Gauging

"Go" Gauge 3-433: It shall be possible to insert each end of this gauge into a connector.

See ANSI C81.63 for gauges.

Base

See ANSI C81.61, Standard Sheets 1-430 and 1-431.

Copyright © 1997 by National Electrical Manufacturers Association
1300 North 17th Street, Suite 1847, Rosslyn, VA 22209

First Edition
December 1997

Copyright National Electrical Manufacturers Association
Provided by IHS under license with NEMA
No reproduction or networking permitted without license from IHS
Not for Resale

G/GX17q Four-Pin Prefocus Lampholders

The designations assigned to these lampholders by the International Electrotechnical Commission (IEC) are G17q and GX17q.

This standard sheet is equivalent to IEC Publication 61.

The drawings are intended only to indicate the dimensions to be controlled.

Holder for lamps with pin arrangement 1 (G17q)

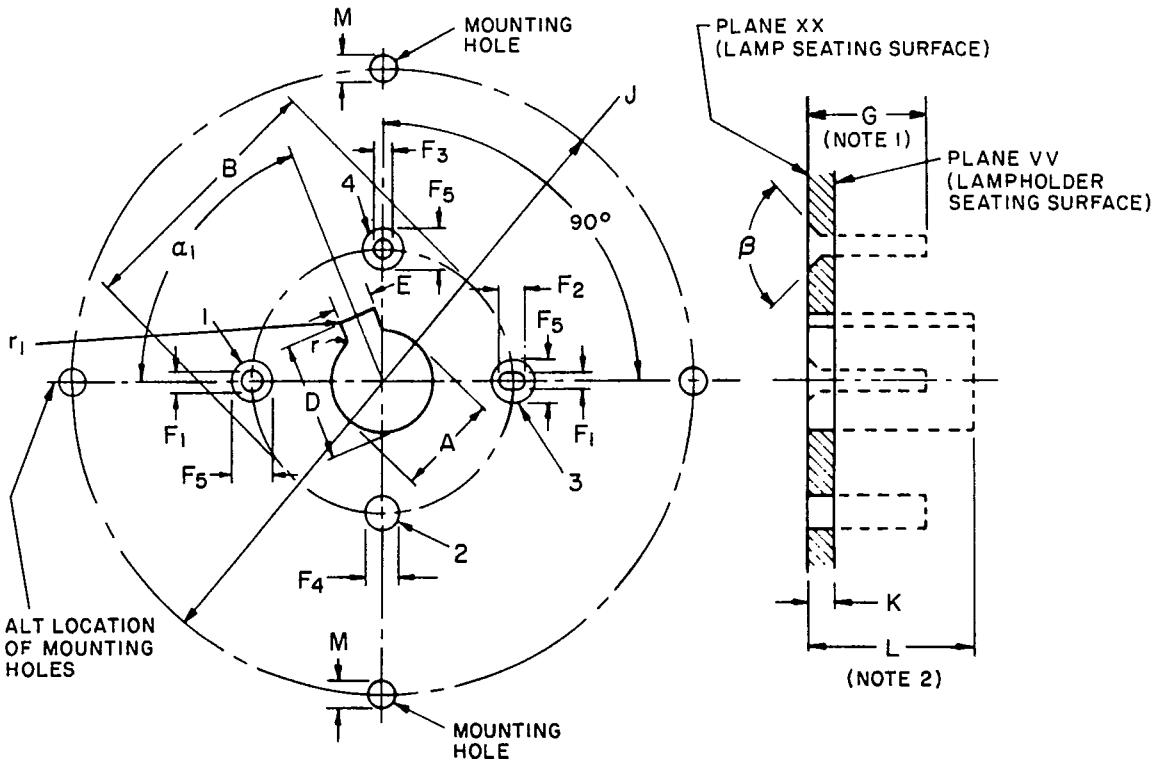

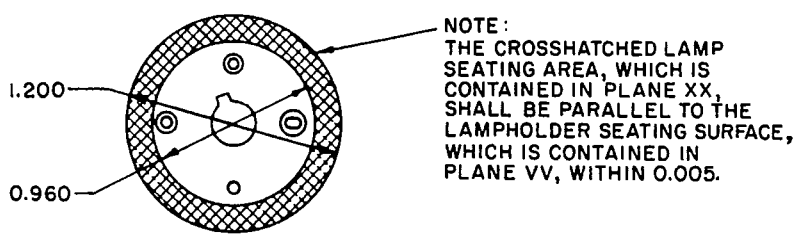

TOP VIEW OF LAMPHOLDER

NOTES

1 Dimension G indicates the minimum clearance that must be provided for lamp pins.

2 Dimension L indicates the minimum clearance that must be provided for the center post.

Copyright National Electrical Manufacturers Association
Provided by IHS under license with NEMA
No reproduction or networking permitted without license from IHS
Not for Resale

ANSI C81.62-1991
Std Sheet 2-440-1

Holder for Lamps with Pin Arrangement 2 (GX17q)

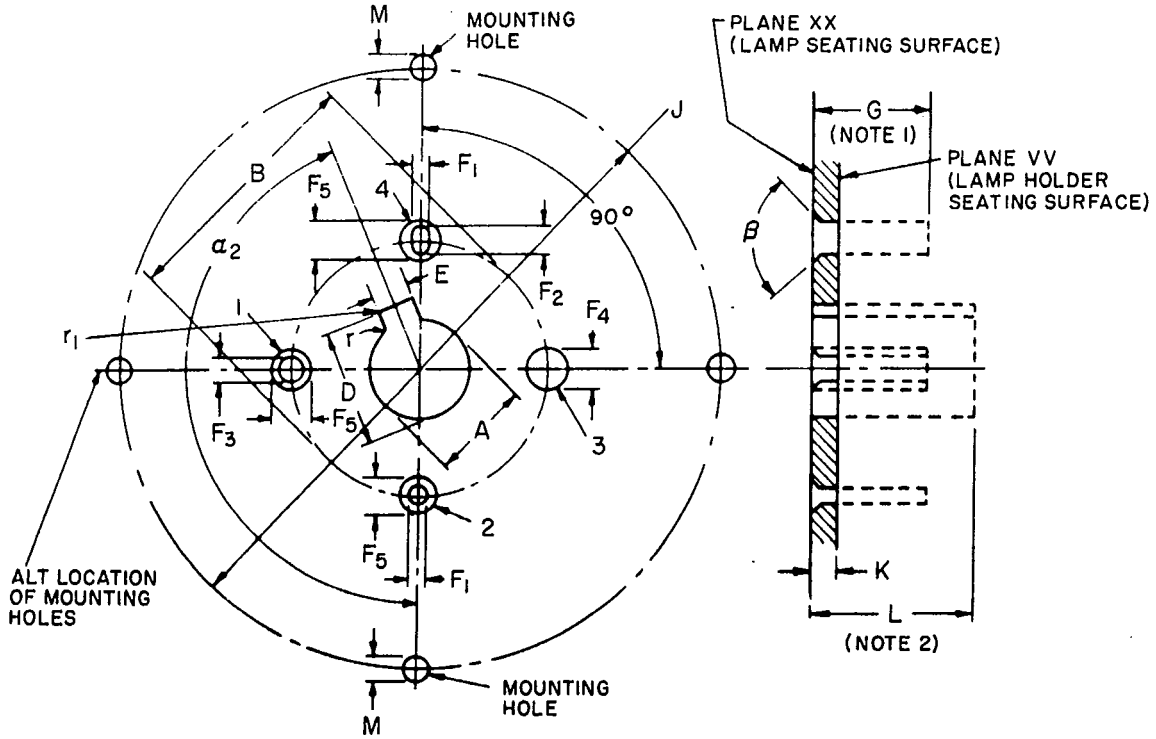

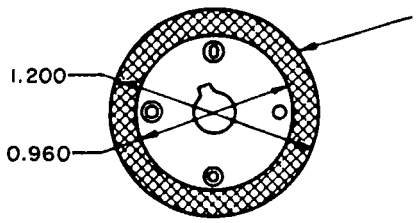

NOTE :
THE CROSSHATCHED LAMP SEATING AREA, WHICH IS CONTAINED IN PLANE XX, SHALL BE PARALLEL TO THE LAMPHOLDER SEATING SURFACE, WHICH IS CONTAINED IN PLANE V V, WITHIN 0.005.

TOP VIEW OF LAMPHOLDER

NOTES

1 Dimension G indicates the minimum clearance that must be provided for lamp pins.

2 Dimension L indicates the minimum clearance that must be provided for the center post.

Copyright National Electrical Manufacturers Association
Provided by IHS under license with NEMA
No reproduction or networking permitted without license from IHS
Not for Resale

Reference	Standard dimensions in		Nearest metric equivalent mm	
	Min	Max	Min	Max
A	0.271	0.282	6.88	7.16
B	0.684	0.690	17.37	17.52
D	0.321	0.337	8.15	8.56
E_1	0.094	0.098	2.39	2.49
F	0.052	0.055	1.32	1.40
F_2	0.075	–	1.90	–
F_3	0.062	–	1.57	–
F_4	0.150	–	3.81	–
F_5	0.150	0.182	3.81	4.62
G	0.296	–	7.52	–
J	1.745	1.755	44.32	44.58
K	0.130	0.140	3.30	3.56
L	0.546	–	13.86	–
M	0.127	0.137	3.22	3.48
r	0.018	0.028	0.46	0.71
r_1	–	0.010	–	0.25
α_1 (degrees)	67°	68°	–	–
α_2 (degrees)	157°	158°	–	–
β (degrees)	79°	81°	–	–

Gauging

"Go" Gauge for G17 Lampholders Having Pin Arrangement No. 1, Gauge 3-443: Each end of the gauge shall enter the lampholder until the surface of the gauge butts against the surface of the lampholder.

"Go" Gauge for G17 Lampholders Having Pin Arrangement No. 2, Gauge 3-444: Each end of the gauge shall enter the lampholder until the surface of the gauge butts against the surface of the lampholder.

Two-pin Contact-making Gauge 3-445: Electrical contact shall be established after each end of the gauge enters the appropriate holes of the holder (holes 1 and 4 for lamps using pin arrangement 1, and holes 1 and 2 for lamps using pin arrangement 2) and when the surface of the gauge butts against the surface of the holder.

Rotation Gauge 3-446: With the holder held down on the two appropriate alignment pins, insert the gauge in the lampholder until the surface of the gauge butts against the lampholder. Rotate the gauge to its limits and read the angle on the scale in degrees.

See ANSI C81.63 for gauges.

Base

See ANSI C81.61, Standard Sheets 1-439 and 1-440 for bases.

Copyright National Electrical Manufacturers Association
Provided by IHS under license with NEMA
No reproduction or networking permitted without license from IHS
Not for Resale

G20 Mogul Bipin Fluorescent Lampholder

The designation assigned to this lampholder by the International Electrotechnical Commission (IEC) is G20.

This standard sheet is equivalent to IEC Publication 61.

The drawing is intended only to indicate the dimensions to be controlled.

Inflexible (rigidly fixed) lampholders

This type of lampholder requires a turning motion for the insertion of a lamp.

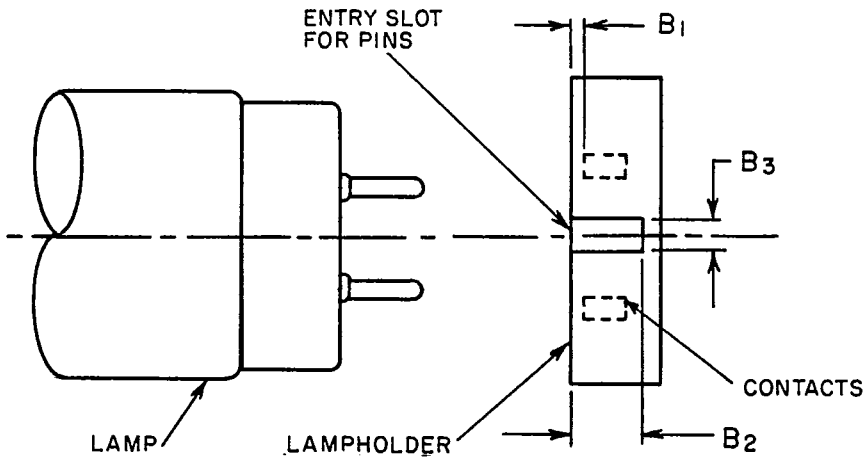

B_1 – The distance between the live contacts and the lampholder face shall not be greater than 0.216 in (5.49 mm).

B_2 – The entry slots of inflexible lampholders shall have a depth not less than 0.625 in (15.87 mm).

B_3 – The width of the entry slots shall be great enough to accommodate the lamp-base pins with allowance for misalignment both of the lamp bases (with respect to each other) and of the lampholders. The gauge shown on ANSI C81.63, Standard Sheet 3459 has the base pins at its two ends so arranged as to simulate a lamp with the maximum rotational misalignment of pins.

Clearance for live parts

When no lamp is in place, a test probe having a hemispherical end with a radius of 0.205 in (5.21 mm) shall not be able to contact live metal parts.

Flexible lampholders

Flexible lampholders are those which make provision for movement of one or both of the lampholders, or a section of one or both of the lampholders, in order to permit insertion of a lamp and also to accommodate variations in the lengths of the lamps. Contact may be made on either the end or the sides of the base pins.

Clearance for live parts

When no lamp is in place, a test probe having a hemispherical end with a radius of 0.205 in (5.21 mm) shall not be able to contact live metal parts.

Copyright National Electrical Manufacturers Association
Provided by IHS under license with NEMA
No reproduction or networking permitted without license from IHS
Not for Resale

Gauging
G20 lampholders of the flexible type shall satisfy the gauges shown on ANSI C81.63, Standard Sheets 3-455, 3-456, 3-459, and 3460.

"Go" Gauge 3-455: Without using undue force, it shall be possible to insert the gauge into the lampholder and turn it until it reaches the normal operating position of the lamp.

Torsion Test Device, Gauge 3-456: The simulated lamp base should be inserted into the lampholder until surface x is in contact with the holder face. The torque may be applied to either the test device or to the lampholder, the other being rigidly mounted.

Double-ended Gauge, Maximum Length Lamp and Minimum Lampholder Spacing, Gauge 3-459: With the holders mounted at their minimum permissible spacing (as recommended by the manufacturer) with respect to a nominal length lamp of 12 in (304.8 mm), it should be possible to insert and remove the gauge without difficulty.

Double-ended Gauge, Minimum Length Lamp and Maximum Lampholder Spacing, Gauge 3-460: With the lampholders mounted at their maximum permissible spacing (as recommended by the manufacturer) with respect to a nominal length lamp of 12 in (304.8 mm), the insertion of the gauge shall cause both indicator lamps (IL) of the test circuit to light, and the indicator lamps shall remain lighted in spite of any possible axial movement of the gauge between the two lampholders.

See ANSI C81.63 for gauges.

Lamp Retention Requirments
The following requirements apply to those types of lampholders requiring rotation of the lamp during insertion. The values given are for a single lamp-base test device described on ANSI C81.63, Standard Sheet 3-456, in a single lampholder.

a) There shall be a detent or other similar arrangement of the contact springs (or other lampholder parts) to give a definite indication of when the lamp has reached its normal seating position.

b) The torque required to rotate the lamp out of its normal seating position shall not be less than 2.0 inch-pounds (0.23 Newton-meter).

If the holders being tested have push-in terminals, a single No. 18 gauge solid wire should be inserted in each terminal before the test is made. As a preconditioning cycle, there should be one clockwise and one counterclockwise rotation of the torsion test device before the minimum measurement is taken.

Base
See ANSI C81.61, Standard Sheet 1-452.

Copyright National Electrical Manufacturers Association
Provided by IHS under license with NEMA
No reproduction or networking permitted without license from IHS
Not for Resale

G22 Medium Bipost Lampholder

The designation assigned to this lampholder by the International Electrotechnical Commission (IEC) is G22.

This standard sheet is equivalent to IEC Publication 61.

The drawing is intended only to indicate the dimensions to be controlled.

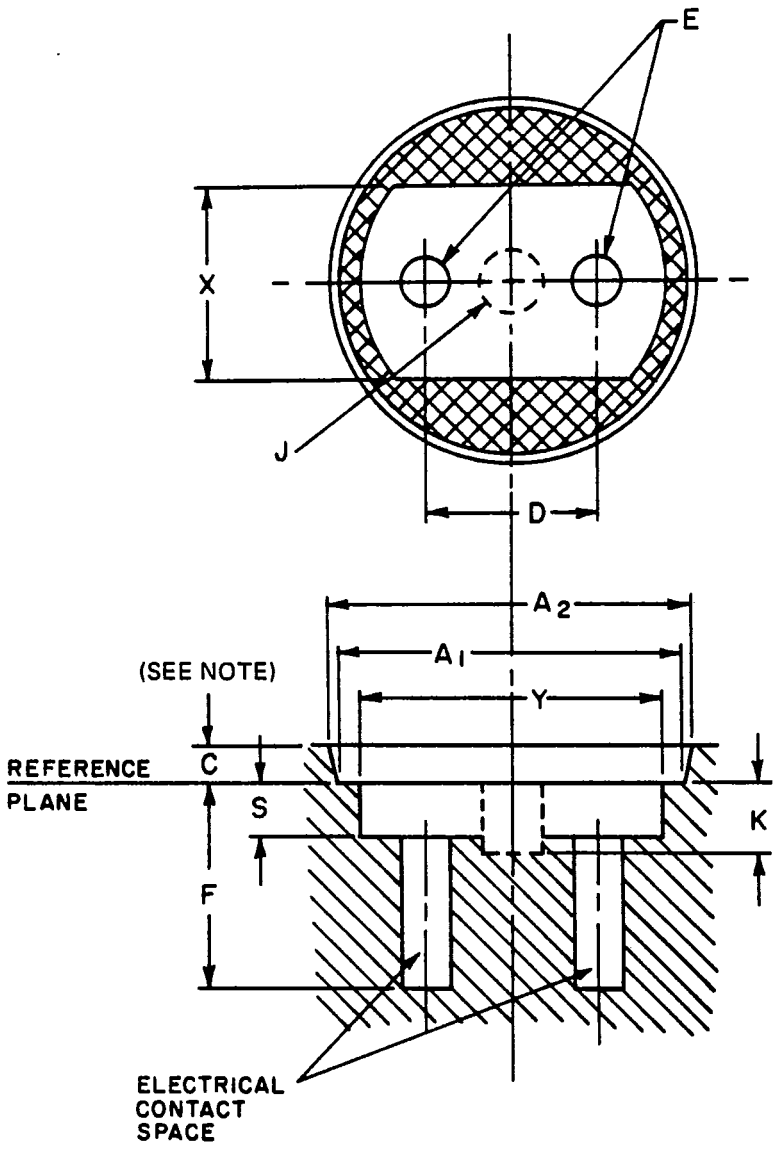

NOTE – Dimensions J and K define a cylindrical space which must be reserved for the exhaust tip of lamps having an all integral base. The use of dashed lines in outlining this space is intended only to indicate that the space being defined will not usually have physical boundaries of this particular shape. The dashed lines do not indicate surfaces or edges that are hidden from view.

Copyright National Electrical Manufacturers Association
Provided by IHS under license with NEMA
No reproduction or networking permitted without license from IHS
Not for Resale

ANSI C81.62-1991
Std Sheet 2-466-1

Reference	Standard dimensions in			Nearest metric equivalent mm		
	Min	Nom	Max	Min	Nom	Max
A_1 (Note 1)	1.795	–	–	45.59	–	–
A_2	1.860	–	–	47.24	–	–
C	–	–	0.193	–	–	4.90
D	–	0.875	–	–	22.22	–
E (Note 2)	–	–	–	–	–	–
F (Note 2)	1.047	–	–	26.59	–	–
J (Note 3)	0.312	–	–	7.92	–	–
K (Note 3)	0.352	–	–	8.94	–	–
S (Note 4)	0.279	–	–	7.09	–	–
X (Note 1)	1.000	–	–	25.40	–	–
Y (Note 1)	1.552	–	1.572	39.42	–	39.93

NOTES

1 The seating area limits are defined by A_1, X, and Y. The seating surface shall lie within the shaded area and need not be continuous.

2 The contacts must accommodate a post diameter range of 0.248–0.252 in (6.30–6.40 mm), a spacing tolerance of ±0.012 in (0.30 mm), and a length of 0.980–1.045 in (24.89–26.54 mm).

3 Dimensions J and K define the minimum free space to be provided for the exhaust tip of glass bases.

4 Dimension S defines the minimum clearance required to accommodate the pin ferrules of glass bases and refers to the uppermost surfaces of the contacts or of the lamp hold-down mechanism.

Gauging

"Go" Gauge 3-469: Upon inserting each end of the gauge into the lampholder, each end should seat with surface X of the gauge, meeting the reference plane of the holder when rotated into the operating position. In the case of lampholders with a pin-locking mechanism, it shall be possible to operate such a mechanism in the intended manner.

See ANSI C81.63 for gauges.

Base

See ANSI C81.61, Standard Sheet 1-466.

Copyright National Electrical Manufacturers Association
Provided by IHS under license with NEMA
No reproduction or networking permitted without license from IHS
Not for Resale

G23 Lampholder

The designation assigned to this lampholder by the International Electrotechnical Commission (IEC) is G23.

This standard sheet is equivalent to IEC Publication 61.

The drawing is intended only to indicate the dimensions to be controlled.

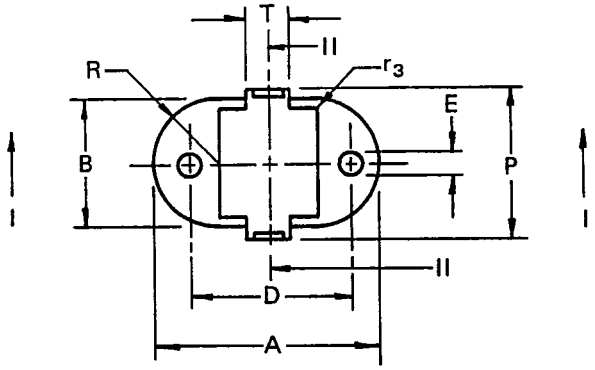

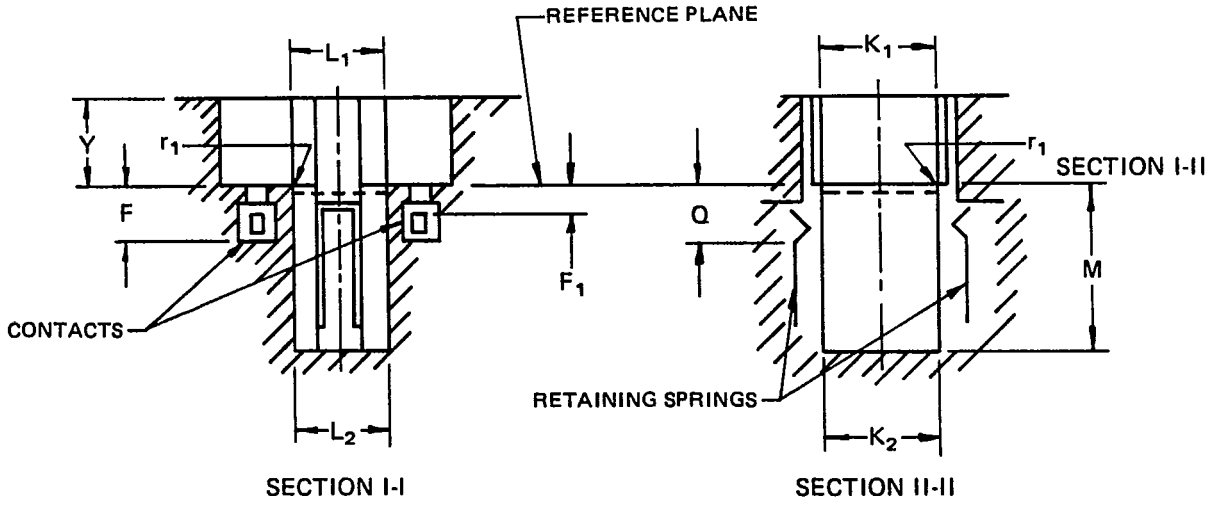

Copyright National Electrical Manufacturers Association
Provided by IHS under license with NEMA
No reproduction or networking permitted without license from IHS
Not for Resale

Reference	Standard dimensions millimeters min	max	Reference	Standard dimensions millimeters min	max
A	32.6	–	L_2 (Note 3)	13.45	13.6
B	18.2	–	M	23.1	–
D	22.9	23.1	P (Note 4)	21.5	–
E	2.9	–	Q (Note 4)	15.5	–
F	6.9	–	R	B/2	–
F_1 (Note 1)	–	2.6	T	5.0	7.0
K_1 (Note 2)	16.4	16.55	Y	–	10.0
K_2 (Note 3)	15.85	16.0	r	0.5	–
L_1 (Note 2)	14.0	14.15	r_3	–	0.5

NOTES

1 For design purposes only, not to be gauged.

2 These values are measured at a distance of 0.75 mm below the reference plane.

3 These values are measured at a distance of 21.0 mm below the reference plane.

4 Dimension Q defines the minimum distance below the reference plane, over which dimension P is to be controlled. Beyond that distance, sufficient clearance shall be provided to assure acceptance of the base.

Gauging

The acceptance of the G23 Base, the maximum insertion and withdrawal forces, and the maximum and minimum retention forces shall be checked by gauges in the following order:

Gauge "A" for Maximum Insertion and Withdrawal Force, gauge 3479: The lampholder shall accept this gauge with an insertion force not exceeding 50 N (under consideration). The force required to withdraw Gauge "A" shall not exceed 40 N (under consideration).

Gauge "B" for Maximum Insertion Force, Gauge 3-481: The lampholder shall accept this gauge with an insertion force not exceeding 50 N (under consideration).

Gauge "C" for Minimum Retention Force, Gauge 3-482: The lampholder shall retain Gauge "C" at a force of at least 5 N (under consideration).

Single Pin Gauge "D" for Checking Maximum Withdrawal Force, Gauge 3-486: The force required to withdraw Gauge "D" shall not exceed 6 N (under consideration).

Single Pin Gauge "E" for Checking Minimum Retention Force, Gauge 3-487: The lampholder shall retain Gauge "E" with a force of at least 0.5 N (under consideration).

NOTE – The lampholder shall not accept the GX23 Gauge 3-483.

When the lampholder is in the installed state, it shall not be possible to touch live parts with the IEC test probe. This requirement applies both with and without a lamp in place, and during insertion or removal of a lamp.

See ANSI C81.63 for gauges.

Base

See ANSI C81.61, Standard Sheet 1-475.

Copyright National Electrical Manufacturers Association
Provided by IHS under license with NEMA
No reproduction or networking permitted without license from IHS
Not for Resale

GX23 Lampholder

The designation assigned to this lampholder by the International Electrotechnical Commission (IEC) is GX23.

This standard sheet is equivalent to IEC Publication 61.

The drawing is intended only to indicate the dimensions to be controlled.

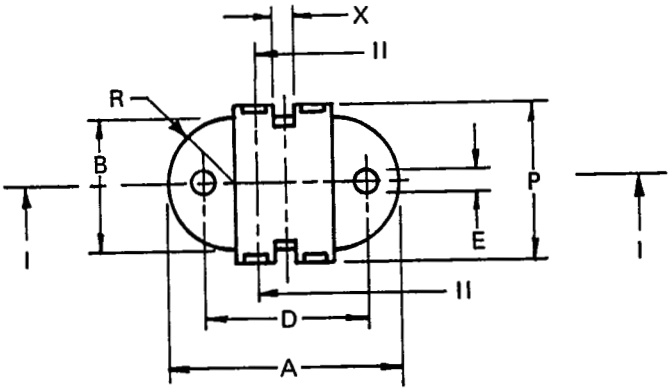

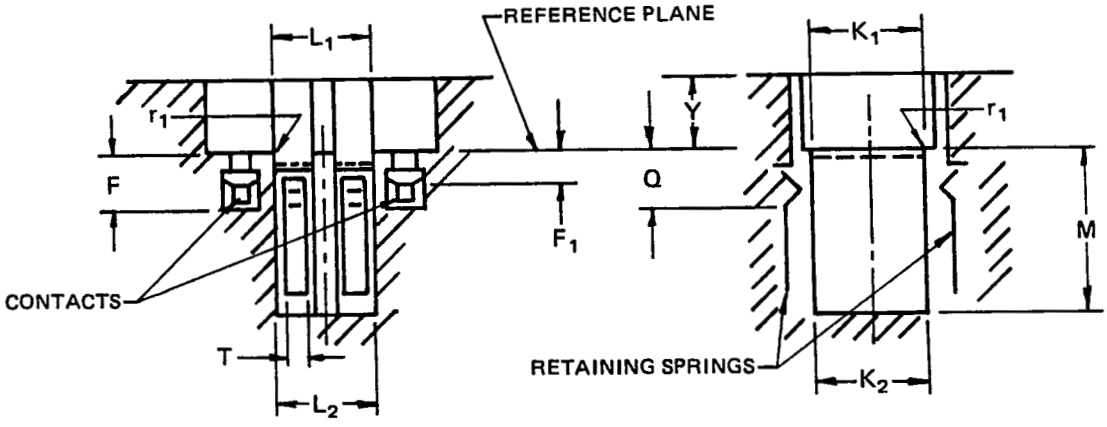

SECTION I-I

SECTION II-II

Copyright National Electrical Manufacturers Association
Provided by IHS under license with NEMA
No reproduction or networking permitted without license from IHS

Not for Resale

Reference	Standard dimensions millimeters min	max	Reference	Standard dimensions millimeters min	max
A	32.6	–	L_2 (Note 4)	13.45	13.6
B	18.2	–	M	23.1	–
D	22.9	23.1	P (Note 5)	21.5	–
E	2.9	–	Q (Note 5)	15.5	–
F	6.9	–	R	B/2	–
F_1 (Note 1)	–	2.6	T	3.0	–
K_1 (Note 2,3)	16.4	16.55	X (Note 3)	2.5	3.0
K_2 (Note 3,4)	15.85	16.0	Y	–	10.0
L_1 (Note 2)	14.0	14.15	r_1	0.5	–

NOTES

1 For design purposes only, not to be gauged.

2 These values are measured at a distance of 0.75 mm below the reference plane.

3 The limits for dimensions K_1 and K_2 shall be observed within width X.

4 These values are measured at a distance of 21.0 mm below the reference plane.

5 Dimension Q defines the minimum distance below the reference plane, over which dimension P is to be controlled. Beyond that distance, sufficient clearance shall be provided to assure acceptance of the base.

Gauging

The acceptance of the GX23 base, the maximum insertion and withdrawal force, and the maximum and minimum retention forces shall be checked by gauges in the following order.

Gauge "A" for Checking Maximum Insertion and Withdrawal Force, Gauge 3-480: The lampholder shall accept Gauges "A". The insertion force is not to exceed 50 N (under consideration). The force needed to withdraw Gauge "A" shall not exceed 40 N (under consideration).

Gauge "B" for Checking Maximum Insertion Force, Gauge 3-481: The lampholder shall accept Gauge "B", and the insertion force is not to exceed 50 N (under consideration).

Gauge "C" for Checking Minimum Retention Force, Gauge 3-483: The lampholder shall retain Gauge "C" with a force of at least 5 N (under consideration).

Single-pin Gauge "D" for Checking Maximum Withdrawal Force, Gauge 3-486: The force needed to withdraw Gauge "D" shall not exceed 6 N (under consideration).

Single-pin Gauge "E" for Checking Minimum Retention Force, Gauge 3-487: The lampholder shall retain Gauge "E" with a force of at least 0.5 N (under consideration).

NOTE – The lampholder shall not accept G23 gauge C, Standard Sheet 3-482.

When the lampholder is in the installed state, it shall not be possible to touch live parts with the IEC test probe. This requirement applies both with and without a lamp in place, and during insertion or removal of a lamp.

See ANSI C81.63 for gauges.

Base

See ANSI C81.61, Standard Sheet 1-476.

Copyright National Electrical Manufacturers Association
Provided by IHS under license with NEMA
No reproduction or networking permitted without license from IHS
Not for Resale

G24d and G24q Lampholders

The designations assigned to these lampholders by the International Electrotechnical Commission (IEC) are G24d-1, G24d-2, G24d-3, G24q-1, G24q-2, G24q-3.

This standard sheet is equivalent to IEC Publication 61.

These drawings are intended only to indicate the dimensions to be controlled.

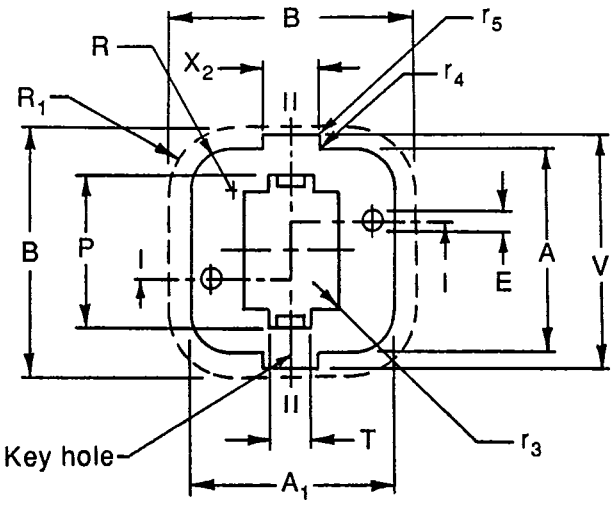

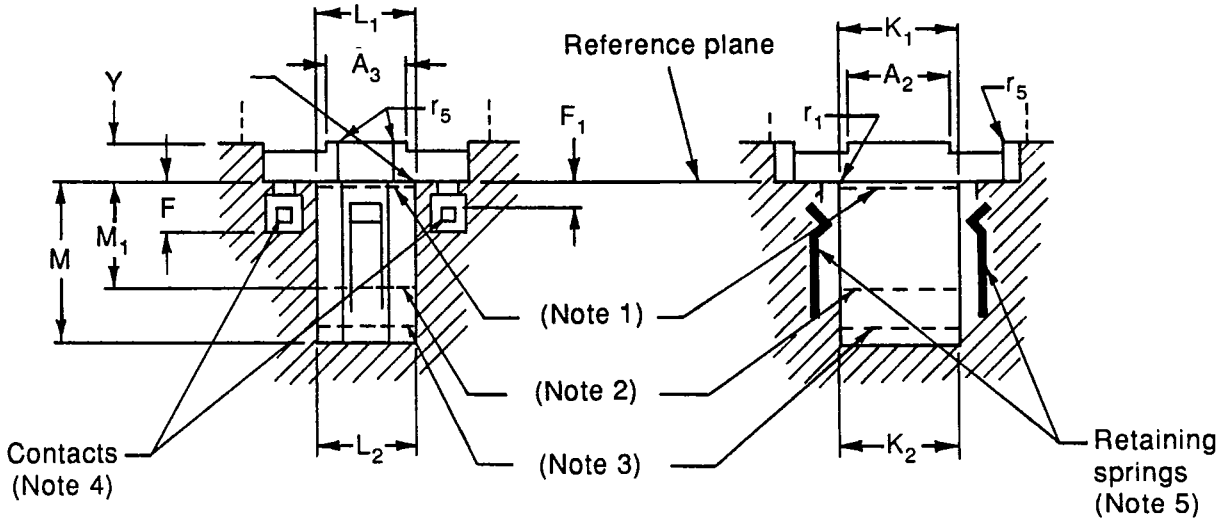

NOTE – Only the G24d-1 lampholder is shown. For lampholders with different designations, see page 2.

Copyright National Electrical Manufacturers Association
Provided by IHS under license with NEMA
No reproduction or networking permitted without license from IHS
Not for Resale

ANSI C81.62-1991
Std Sheet 2-493-1

PIN LOCATION

G24d-

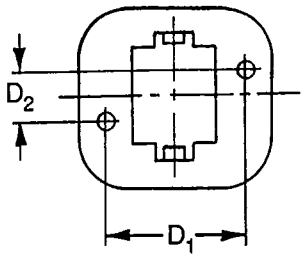

Figure 1

G24q-

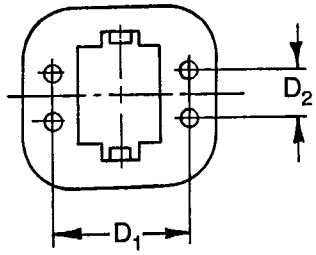

Figure 2

KEYING SYSTEM

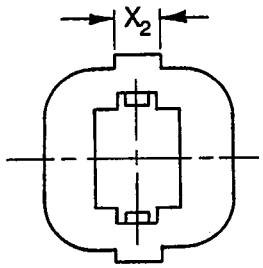

Figure 3

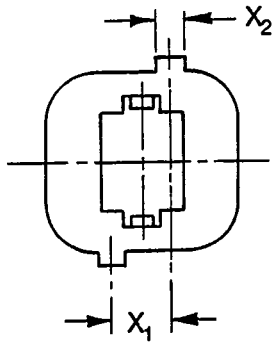

Figure 4

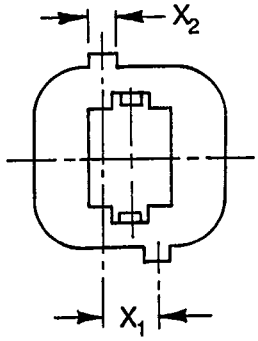

Figure 5

Designation	Pin location figure	Keying system figure	Dimension X_1 nom	Dimension X_2	
				Min	Max
G24d-1	1	3	Note 6	7.2	7.8
G24q-1	2				
G24d 2	1	4	9.3	3.7	–
G24q-2	2				
G24d-3	1	5	9.3	3.7	–
G24q-3	2				

Copyright National Electrical Manufacturers Association
Provided by IHS under license with NEMA
No reproduction or networking permitted without license from IHS
Not for Resale

Table 2 – Standard dimensions (mm)

Reference	Min	Nom	Max
A	29.1	–	32.1
A_1	31.6	–	32.1
A_2 (Note 7)	–	16.0	–
A_3 (Note 7)	–	11.2	–
B (Note 8)	–	35.6	–
D_1	22.9	–	23.1
D_2	7.9	–	8.1
E	3.0	–	–
F	6.9	–	–
F_1 (Note 9)	–	–	2.6
K_1 (Note 1)	16.4	–	16.55
K_2 (Note 3)	15.85	–	16.0
L_1 (Note 1)	14.0	–	14.15
L_2 (Note 3)	13.45	–	13.6
M	23.1	–	–
M_1 (Note 2)	–	–	15.0
P	21.5	–	–
R	–	–	8.7
R_1 (Note 8)	–	9.3	–
T	5.0	–	7.0
V	33.6	–	–
X_1	–	See Table #1	–
X_2 (Note 7)	–	See Table #1	–
Y (Note 7)	5.0	–	5.5
r_1	0.5	–	–
r_3	–	–	0.5
r_4 (Note 10)	0.2	–	0.5
r_5	–	–	0.2

NOTES

1 Dimensions K_1 and L_1 are measured at a distance of 0.75 mm from the reference plane.

2 Departures from the plane determined by the dimensions K_1-K_2, L_1-L_2 are allowed only if adjacent to dimensions M_1 and material is provided in these planes, so that adequate guidance during insertion of the lamp is assured.

3 Dimensions K_2 and L_2 are measured at a distance of 21.0 mm from the reference plane.

4 The contacts shall be floating. Electrical contact on the lamp pins shall be made in the direction perpendicular to the plane(s) through the axial center lines of the entrance openings for the pins separated by dimension D_2 with an angular tolerance of ±30°. (See also note 2 on base sheet).

5 The springs used for retention shall be of a material which ensures that the retention forces are not substantially changed throughout the life of the lampholder.

6 In this design the key-slots are located on the center line.

7 Inside dimensions A_2 and A_3, with the exception of dimension X_2 of the key holes, both the minimum and maximum limits of dimension Y shall be observed. Outside dimensions A_2 and A_3 only the maximum limit of dimension Y applies.

8 Dimensions B_1 and R_1 define the minimum free space to be provided for smooth acceptance of the base.

9 For design purpose only, not to be gauged.

10 A chamfer between 0.2 and 0.4 mm is also allowed.

Copyright National Electrical Manufacturers Association
Provided by IHS under license with NEMA
No reproduction or networking permitted without license from IHS
Not for Resale

Protection against electrical shock shall be provided when the holder is installed as in normal use; without a lamp, with the appropriate lamp in place, and during insertion or removal of the lamp. The insertion of only one pin of the lamp to the first point of contact shall be prevented.

Gauging
For lampholders G24d-1, G24d-3, G24q-1 and G24q-3, the acceptance of the relevant base, maximum insertion and withdraw forces, and the minimum retention force shall be checked by gauges in the following order:

Plug Gauges "A" for Checking Maximum Insertion and Withdrawal Forces, Gauges 3-494: The lampholder shall accept gauges "A" with an insertion force not exceeding 50 N (under consideration). The force required to withdraw Gauges "A" shall not exceed 40 N (under consideration).

Plug Gauges "B" for Checking Maximum Insertion Force, Gauges 3-495: The lampholder shall accept Gauges "A" with an insertion force not exceeding 50 N (under consideration).

Plug Gauges "C" for Checking Minimum Retention Force, Gauges 3-496: The lampholder shall retain Gauges "C" with a force of at least 15 N (under consideration).

Single-pin Gauge "D" for Checking Maximum Withdrawal Force, Gauge 3-486: The force required to withdraw Gauge "D" shall not exceed 6 N (under consideration).

Single-pin Gauge "E" for Checking Minimum Retention Force, Gauge 3-487: The lampholder shall retain Gauge "E" with a force of at least 0.5 N (under consideration).

Plug Gauges "F" for Checking Non-interchangeability of Bases, Gauges 3-497: The lampholder shall not accept those gauges with designations, indicated by the digit following the hyphen, that are different than its designation.

"Go" Gauges "G" for Checking Key Slots, Gauges 3-498: lampholder shall accept relevant Gauge "G" with an insertion force not exceeding 10 N (under consideration).

See ANSI C81.63 for gauges.

Base
See ANSI C81.61, Standard Sheet 1-493.

Copyright National Electrical Manufacturers Association
Provided by IHS under license with NEMA
No reproduction or networking permitted without license from IHS
Not for Resale

G32 and GX32 Lampholders

The designations assigned to these lampholders by the International Electrotechnical Commission (IEC) are G32d-1, 2, 3, 4, 5; G32q-1, 2, 3, 4, 5; GX32d-1, 2, 3, 4, 5.

This Standard Sheet is equivalent to that pending for IEC Publication 61.

These drawings are intended only to indicate the dimensions to be controlled.

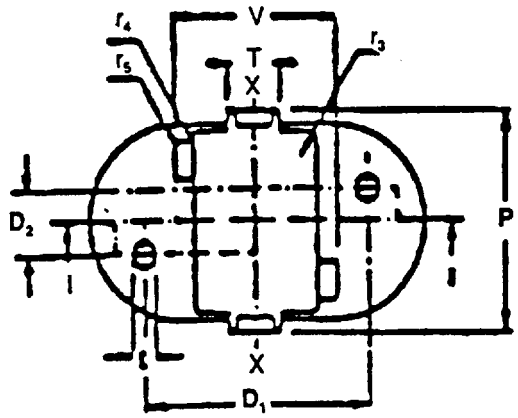

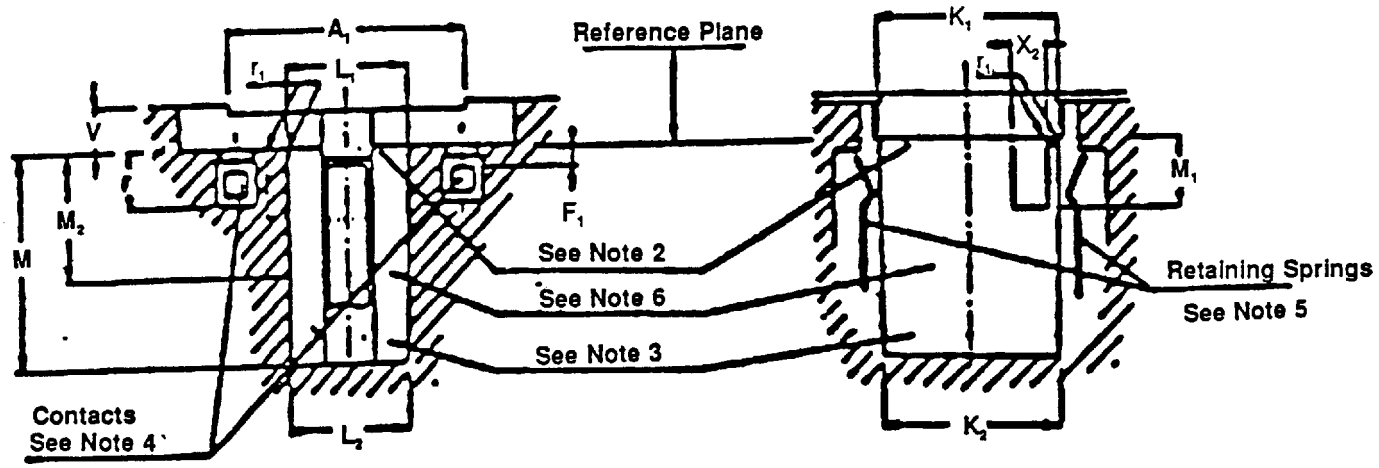

Section I-I

Section II-II

NOTE: Only the G32d-4 lampholder is shown. For other variations of G32d, G32q and GX32d lampholders, see page 2.

Copyright National Electrical Manufacturers Association
Provided by IHS under license with NEMA
No reproduction or networking permitted without license from IHS
Not for Resale

ANSI C81.62a-1993
Std Sheet 2-506-1
Page 2

Contact Hole Location (Top View)

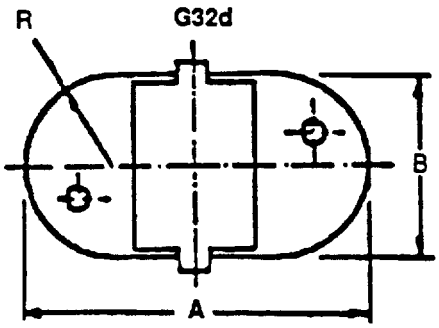

Figure 2

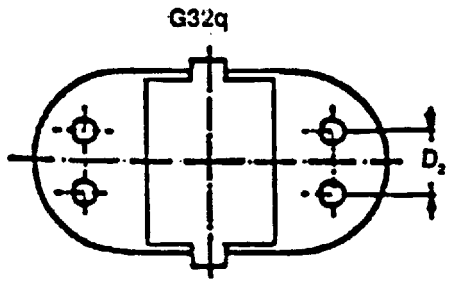

Figure 3

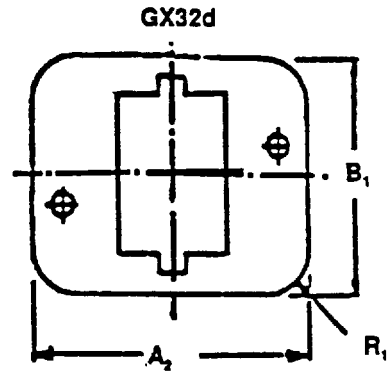

Figure 4

Keying System (Top View)

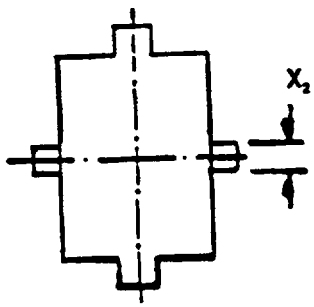

Figure 5

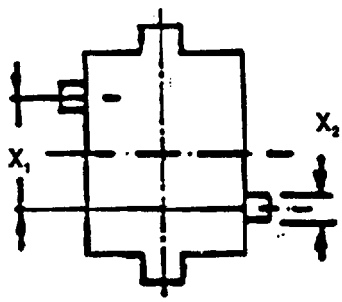

Figure 6

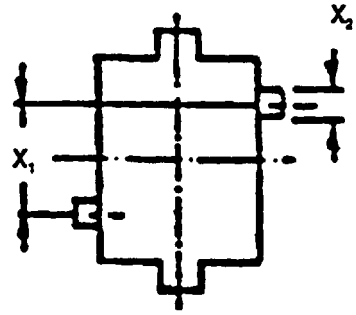

Figure 7

Copyright National Electrical Manufacturers Association
Provided by IHS under license with NEMA
No reproduction or networking permitted without license from IHS
Not for Resale

G32 and GX32 Lampholders

CONTACT AND KEY WAY VARIATIONS

Designation	Contact Hole Location Figure	Keying System Figure	Standard Dimension X_1 Nom. (mm)
G32d-1	2	5	Note 9*
G32q-1	3	5	Note 9*
GX32d-1	4	5	Note 9*
G32d-2	2	6	7.5
G32q-2	3	6	7.5
GX32d-2	4	6	7.5
G32d-3	2	7	7.5
G32q-3	3	7	7.5
GX32d-3	4	7	7.5
G32d-4	2	6	15.0
G32q-4	3	6	15.0
GX32d-4	4	6	15.0
G32d-5	2	7	15.0
G32q-5	3	7	15.0
GX32d-5	4	7	15.0

*Notes follow next table

Copyright National Electrical Manufacturers Association
Provided by IHS under license with NEMA
No reproduction or networking permitted without license from IHS
Not for Resale

Reference	Standard Dimensions (millimeters)		
	Min	Nom	Max.
A (Note 1)	44.2	—	46.0
A_1 (Note 1)	—	32	—
A_2	39.3	—	41.0
B (Note 1)	23.9	—	—
B_1	32.3	—	—
D_1	30.9	—	31.1
D_2	27.9	—	8.1
E	3.4	—	—
F	6.9	—	—
F_2 (Note 8)	—	—	2.6
K_1 (Note 2)	22.25	—	22.40
K_2 (Note 3)	21.50	—	21.65
L_1 (Note 2)	16.65	—	16.80
L_2 (Note 3)	15.90	—	16.05
M	27.0	—	—
M_1	8.5	—	—
M_2 (Note 6)	—	—	16.0
P	27.2	—	—
R (Note 1)	—	B/2	—
R_1	—	—	5.85
T	6.0	—	8.0
V	22.1	—	—
X_1	See Contact and Key Variations		
X_2 (Note 9)	4.45	—	5.0
Y (Note 1)	5.0	—	5.5
r_1	0.5	—	—
r_3	—	—	0.5
r_4 (Note 7)	0.2	—	0.5
r_5	—	—	0.2

NOTES:

(1) These dimensions define the minimum free space to be provided for the base. Dimension A_1 denotes the width outside which both the minimum and maximum limits of dimension Y shall be observed. Inside dimension A_1 only the maximum limit of dimension Y applies.

(2) These values are measured at a distance of 0.75 mm from the reference plane.

(3) These values are measured at a distance of 24.5 mm from the reference plane.

(4) The contacts shall be floating. Electrical contact on the lamp pins shall be made in the direction perpendicular to the planes through the axial center lines of the entrance openings for the pins separated by dimension D_2 with an angular tolerance of ±30°. (See also note (6) on standard sheet 1-506.)

(5) The springs used for retention shall be of a material which ensures that the retention forces are not substantially changed throughout the life of the lampholder.

(6) Departures from the planes determined by the dimensions K_1, K_2, L_1, and L_2 are allowed only if adjacent to dimension M_2; material is provided in these planes so that adequate guidance during insertion of the lamp is assured.

(7) A chamfer between 0.2 and 0.4 mm is also allowed.

(8) For design purposes only; not to be gauged

(9) In this design the key-slots are located on the center line.

GENERAL NOTE: The lampholder shall be so designed that its exterior clearly indicates that removal and insertion of the lamp is not carried out with a rotary movement.

Copyright National Electrical Manufacturers Association
Provided by IHS under license with NEMA
No reproduction or networking permitted without license from IHS
Not for Resale

General Design Features
The values given in the second table refer to lampholders which are intended for use in combination with an auxiliary bulb-holder (in which case some angular play between base and lampholder is required). See "Mounting."

For GX32d-1, 2, 3, 4, 5, where no auxiliary bulb-holding is used, the lampholder may fit tighter to the base, and the minimum limits for dimensions K_1, K_2, L_1 and L_2 may be reduced accordingly. The permitted reduced dimensions are: K_1 min = 22.0 mm, K_2 min = 21.25 mm, L_1 min = 16.4 mm and L_2 min = 15.65 min.

It should be understood that these tighter fitting lampholders with reduced dimensions may not be used in combination with a auxiliary bulb-holding device.

Mounting
If used, auxiliary bulb-holding devices shall not be located between the tubes of the lamp, but rather on the circumference. The longitudinal location of such a device shall be appropriate to the lamp dimensions, see the relevant lamp data sheet.
NOTE: To avoid creation of an undesirable "cool spot," it is recommended not to use metal for an auxiliary bulb-holding device.

Gauging
Gauge A_1 for Checking Maximum Insertion Force and Maximum Withdrawal Force, Gauge 3-507: The lampholder shall accept the gauge A, with an insertion force not exceeding 50 N (under consideration).

The force required to withdraw gauge A_1 from the fully-seated position shall not exceed 40 N (under consideration).

For checking GX32d-1, 2, 3, 4, 5 lampholders gauge A_1 shall be replaced by gauge A_2. See ANSI C81.63, Standard Sheet 3-508. The same maximum insertion and withdrawal forces apply as for gauge A_1.

Gauge B for Checking Maximum Insertion Force, Gauge 3-509: The lampholder shall accept the gauge B with an insertion force not exceeding 50 N (under consideration).

Gauge C For Checking Minimum Retention Force, Gauge 3-510: After insertion to the fully-seated position the lampholder shall retain the gauge C with a force of at least 15 N (under consideration).

Single-pin Gauge D for Checking Maximum Withdrawal Force of Contacts, Gauge 3-486: After being fully inserted into one of the holder contacts, the force required to withdraw this gauge shall not exceed 6 N (under consideration).

Single-pin Gauge E for Checking Minimum Withdrawal Force of Contacts, Gauge 3-487: After being fully inserted into one of the holder contacts, the lampholder shall retain this gauge with a force of at least 0.5 N (under consideration).

"Not-go" Gauges F for Checking Non-interchangeability, Gauge 3-511: The lampholder shall not accept the relevant gauge.

"Go" Gauges G for Checking Key Slots, Gauge 3-512: The lampholder shall accept the relevant gauge with an insertion force not exceeding 10 N (under consideration).

See ANSI C81.63 for Gauges.

Copyright National Electrical Manufacturers Association
Provided by IHS under license with NEMA
No reproduction or networking permitted without license from IHS
Not for Resale

This page intentionally left blank.

Copyright National Electrical Manufacturers Association
Provided by IHS under license with NEMA
No reproduction or networking permitted without license from IHS

Not for Resale

G38 Mogul Bipost Lampholder

The designation assigned to this lampholder by the International Electrotechnical Commission (IEC) is G38.

This standard sheet is equivalent to IEC Publication 61.

The drawing is intended only to indicate the dimensions to be controlled.

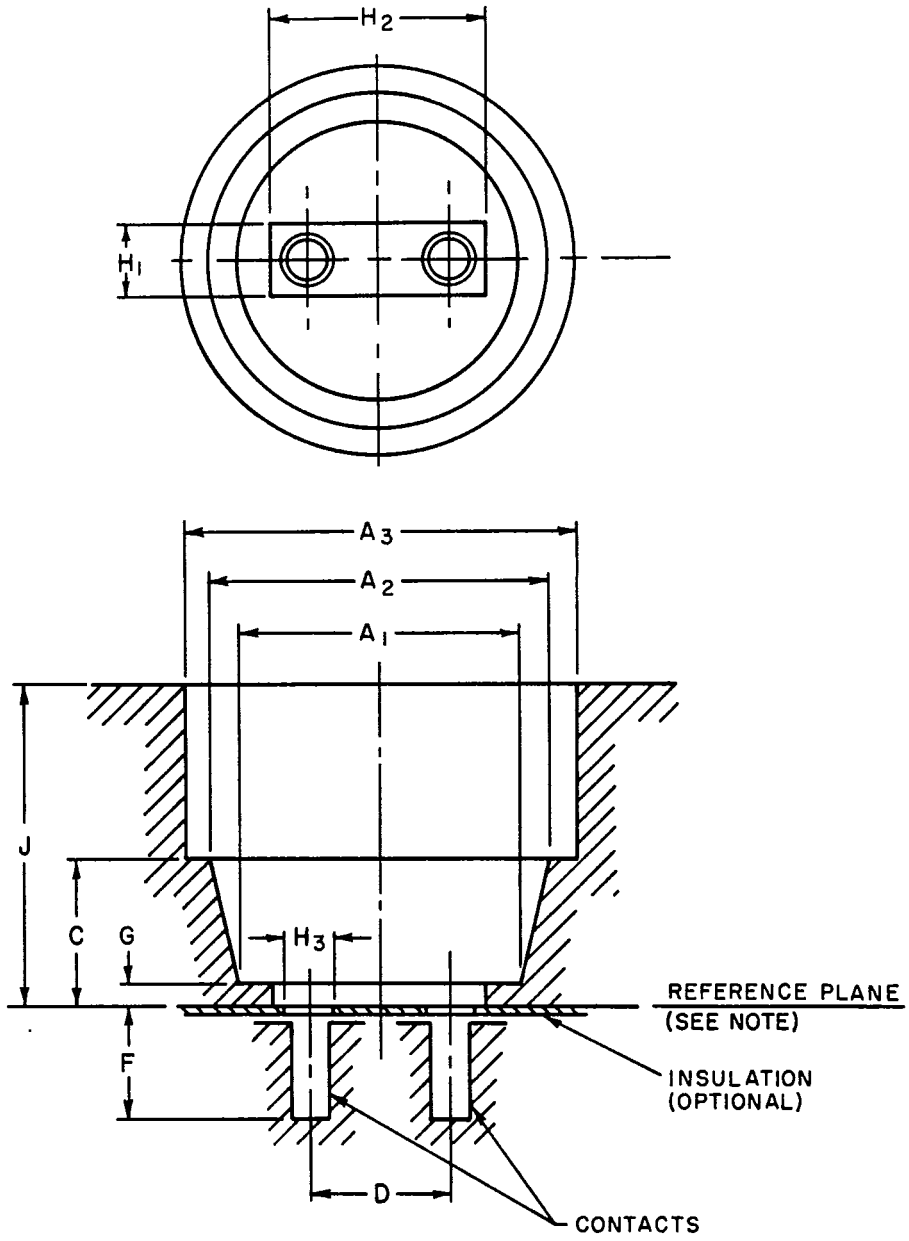

NOTE – The reference plane may be formed by either a surface of insulating material or by the top of the holder contacts.

Copyright National Electrical Manufacturers Association
Provided by IHS under license with NEMA
No reproduction or networking permitted without license from IHS
Not for Resale

ANSI C81.62-1991
Std Sheet 2-519-1

Reference	Standard dimensions in			Nearest metric equivalent mm		
	Min	Nom	Max	Min	Nom	Max
A_1	3.016	–	–	76.6	–	–
A_2	3.508	–	–	89.1	–	–
A_3	4.193	–	–	106.5	–	–
C	–	–	1.610	–	–	40.9
D (Note 1)	–	1.500	–	–	38.1	–
F	1.160	–	–	29.46	–	–
G	–	–	0.252	–	–	6.4
H_1	0.799	–	–	20.3	–	–
H_2	2.291	–	–	58.2	–	–
H_3 (Note 2)	–	–	0.560	–	–	14.23
J	–	–	3.740	–	–	95.0

NOTES

1 The fit of a "maximum" lamp with maximum and minimum post spacings is checked by the gauge shown on Standard Sheet 3-523.

2 Applies only to the surface of optional insulating material.

Lamp wattage
The lampholders are designed to accomodate 2kW, 5kW, and 10kW lamps and shall accept and retain lamps having bases that meet the requirements of ANSI C81.61, Standard Sheet 1-519.

Bulb supports
Unless equivalent means is provided by the lamp housing, holders that are used for 10kW lamps, having a nominal bulb neck or base skirt diameter of 4.13 in (105 mm), shall be provided with a device to support the lamp.

Where lampholders are provided with supports intended specifically for use with 5kW and 10kW lamps having integral glass bases, these shall be located in the area between 1.18 in (30 mm) and 1.57 in (40 mm) above the reference plane.

Gauging
"Go" Gauge 3-523: It shall be possible to insert the maximum and minimum gauge ends into the lampholder until surface V is in contact with the lampholder.

Base
See ANSI C81.61, Standard Sheet 1-519.

Copyright National Electrical Manufacturers Association
Provided by IHS under license with NEMA
No reproduction or networking permitted without license from IHS
Not for Resale

P8.25d LAMPHOLDER

The designation assigned in accordance with the system of the International Electrotechnical Commission (IEC) is P8.25d. At the time of issuance of this Standard there was no comparable IEC Publication in existence. It is commonly known as the PCT 1-3/4 in the United States.

This drawing is intended only to indicate the dimensions to be controlled.

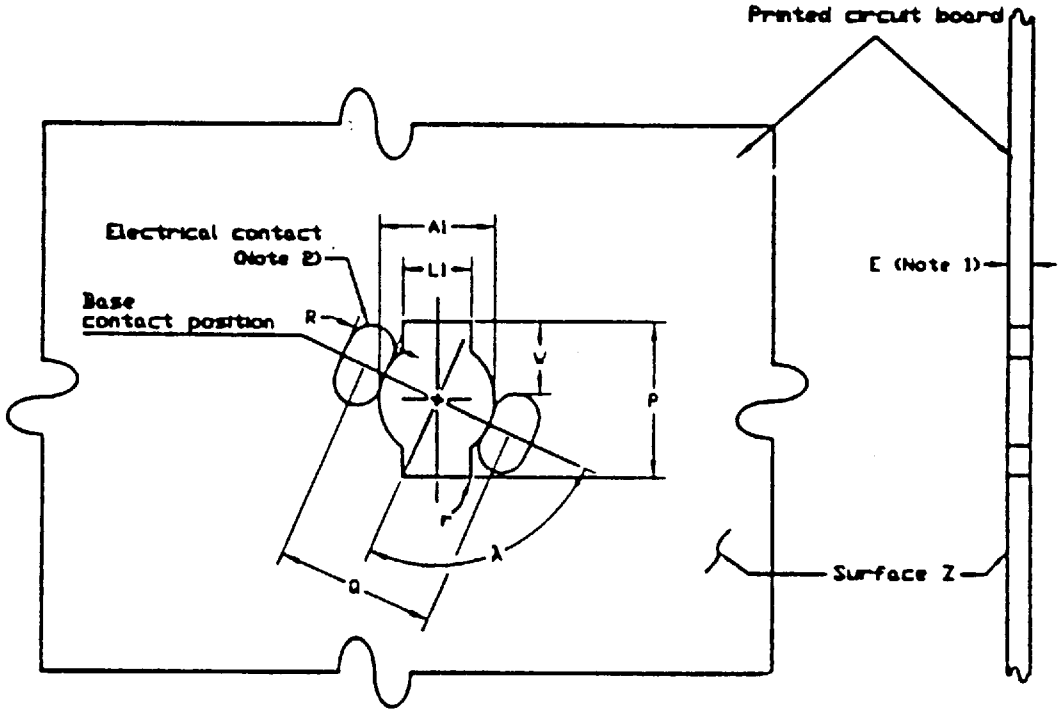

Copyright National Electrical Manufacturers Association
Provided by IHS under license with NEMA
No reproduction or networking permitted without license from IHS
Not for Resale

Reference	Standard Dimensions (in.)		
	Min	Nom	Max
A1	8.63	—	8.76
E (Note 1)	—	1.52	—
L1	5.08	—	5.20
P	11.40	—	—
Q	—	12.00	—
R (Note 2)	—	3.50	—
W (Note 2)	5.20	—	6.00
r	—	0.81	—
λ	—	90°	—

NOTES

1 Dimension E represents a typical board thickness including the electrical contact. Other thicknesses are optional.

2 Electrical contact configuration is optional.

3 This holder provides clearances for easy insertion of a base. Therefore, retention of the base is not assured and means of retention should be provided by the base itself.

GAUGING

See ANSI C81.63-1991 Standard Sheet 3-530-1 (pending)

BASE

See ANSI C81.61-1990 Standard Sheet 1-530-1

Copyright National Electrical Manufacturers Association
Provided by IHS under license with NEMA
No reproduction or networking permitted without license from IHS
Not for Resale

LAMPHOLDERS

DOUILLES

PG12-. & PGX12-.

Dimensions in millimetres - Dimensions en millimètres

The drawing is intended only to illustrate the dimensions essential for interchangeability.
Le dessin a pour seul but d'illustrer les dimensions essentielles pour l'interchangeabilité.

For details of caps PG12 and PGX12, see sheet 7004-64.
Pour les détails des culots PG12 et PGX12, voir feuille 7004-64.

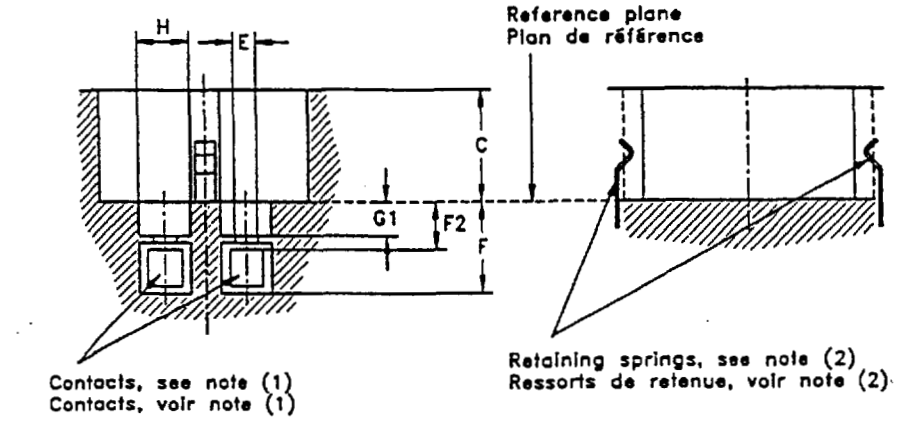

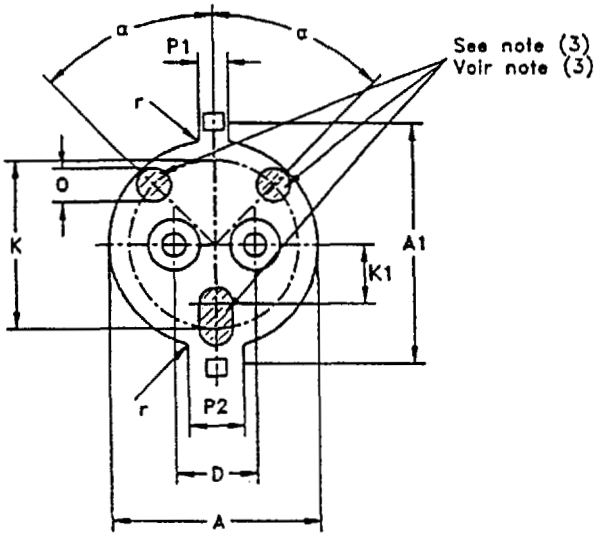

Only the PG12-1 holder is shown.
For PGX12 holders, the arrangement of pin holes and seating areas is situated at an angle of 90°, compared with PG12 holders.
For holders with different designations see page 2/3.

PGX12-1 and PGX12-2 holders are intended for high-temperature applications (above 150 °C, under consideration).

Seule la douille PG12-1 est représentée.
Les douilles PGX12 ont leurs trous de broches et leurs zônes d'appui décalés de 90° par rapport aux mêmes éléments des douilles PG12.
Pour les douilles de désignations différentes, voir page 2/3.

Les douilles PGX12-1 et PGX12-2 sont prévues pour des applications à températures élevées (les températures supérieures à 150 °C, à l'étude).

Copyright National Electrical Manufacturers Association
Provided by IHS under license with NEMA
No reproduction or networking permitted without license from IHS
Not for Resale

LAMPHOLDERS

DOUILLES

PG12-. & PGX12-.

Dimensions in millimetres - Dimensions en millimètres

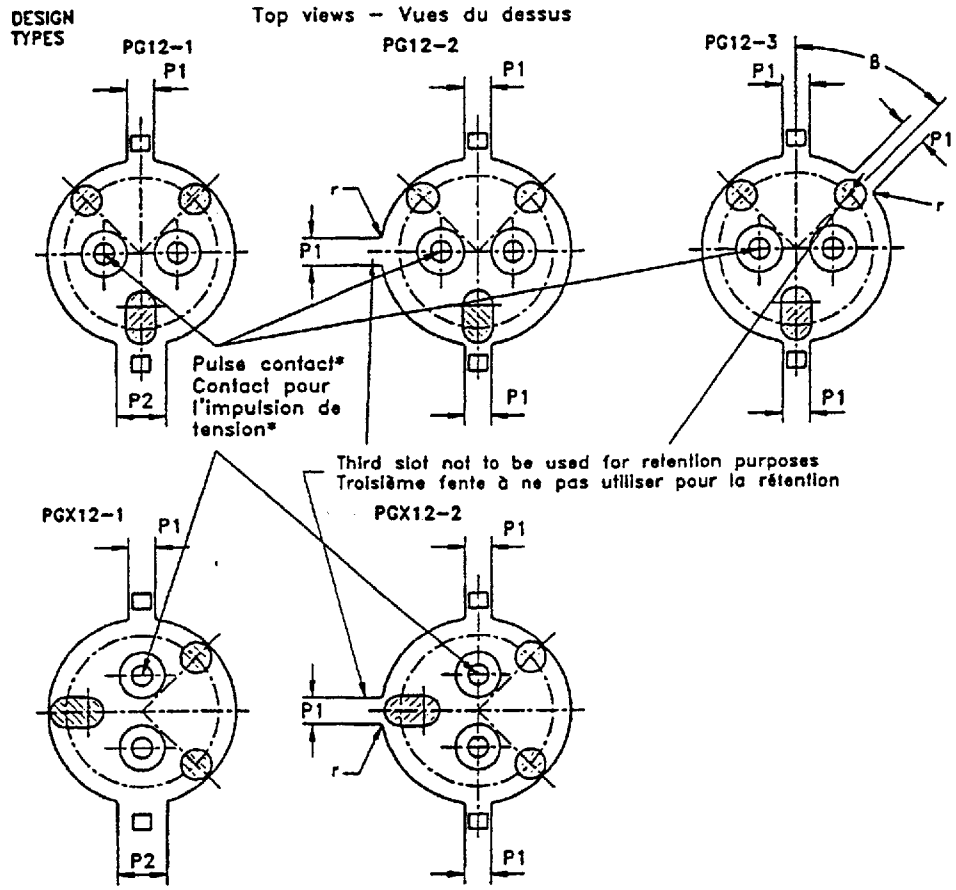

* If these lampholders are used for lamps requiring a high-voltage starting pulse, the pulse shall be applied to this contact.

PG12-1 holder dimensions are shown on page 1/3.
PG12-2 holder dimensions are the same as for the PG12-1 holder except for the number of key slots and the related dimensions. There are three similar key slots having dimensions A1, P1 and r.
PG12-3 holder dimensions are the same as for the PG12-2 holder except for the position of the lugs.
PGX12-1 holder dimensions are the same as for the PG12-1 holder except for the position of the contacts and the seating areas for the supporting bosses of the cap, which have been turned in a clockwise direction over an angle of 90°.
PGX12-2 holder dimensions are the same as for the PGX12-1 holder except for the number of key slots and the related dimensions. There are three similar key slots having dimensions A1, P1 and r.

*Si ces douilles sont utilisées avec des lampes nécessitant une impulsion de tension d'amorçage élevée, la surtension doit être appliquée à ce contact.

Les dimensions de la douille PG12-1 sont représentées en page 1/3.
La douille PG12-2 a les mêmes dimensions que la douille PG12-1, sauf en ce qui concerne le nombre des fentes de détrompage et les dimensions correspondantes. Il y a trois fentes de détrompage similaires ayant les dimensions A1, P1 et r.
Les dimensions de la douille PG12-3 sont les mêmes que pour la douille PG12-2, sauf pour la position des fentes de détrompage.
La douille PGX12-1 a les mêmes dimensions que la douille PG12-1, sauf en ce qui concerne la position des contacts et des zones d'appui des bossages supports du culot qui ont subi une rotation de 90° dans le sens des aiguilles d'une montre.
La douille PGX12-2 a les mêmes dimensions que la douille PGX12-1, sauf en ce qui concerne le nombre des fentes de détrompage et les dimensions correspondantes. Il y a trois fentes de détrompage similaires ayant les dimensions A1, P1 et r.

Copyright National Electrical Manufacturers Association
Provided by IHS under license with NEMA
No reproduction or networking permitted without license from IHS
Not for Resale

LAMPHOLDERS

DOUILLES

PG12-. & PGX12-.

Dimensions in millimetres - Dimensions en millimètres

Dimension	Min.	Max.
A	30,8	32,0
A1	37,8	--
C	15,5	17,5
D	12,0	
E	3,18	3,58
F	12,7	--
F2	--	7,5
G1	4,6	--
H	7,5	--

Dimension	Min.	Max.
K	Approx. 25,0	
K1	Approx. 8,8	
O (3)	5,0	--
P1	4,2	4,6
P2	8,1	--
r	0,5	--
α	Approx. 45°	
ß	Nom. 45°	

(1) The contacts of the holder shall be self-adjusting for the purpose of contact-making. Electrical contact shall be made on the non-deformed part of the cap pins. See note (5) of cap sheet 7004-64.
(2) The springs used for retention shall be of a material which ensures that the retention forces are not substantially changed throughout the life of the lampholder, taking into account the relatively high temperature and continuous stress involved. Plastic material shall not be used until appropriate requirements and tests for ageing have been established.
(3) Seating area for the supporting bosses of the cap.

(1) Les contacts de la douille doivent s'auto-régler en ce qui concerne la réalité du contact. Le contact électrique doit être réalisé sur la partie non déformée des broches du culot. Voir note (5) de la feuille du culot 7004-64.
(2) Les ressorts utilisés pour la fixation doivent être en matériau qui garantisse que les forces de rétention ne changeront pas de manière sensible durant la vie de la douille en tenant compte de la température relativement élevée et de la contrainte continue imposée. La matériau plastique ne doit pas être utilisé tant que les prescriptions et les essais de vieillissement appropriés n'auront pas été établis.
(3) Zones de siège des bossages supports du culot.

GAUGING

For lampholders PG12 and PGX12 the acceptance of and contact-making with caps PG12-.. and PGX12-.. shall be checked by gauges in the following order:

- The lampholder shall accept gauges A (see sheet 7006-81A) and B (see sheet 7006-81B) with an insertion force not exceeding 100 N.
- The force required to withdraw gauge A (see sheet 7006-81A) shall not exceed 80 N.
- The lampholder shall accept gauge C (see sheet 7006-81C) in one way only.
- The lampholder shall retain gauge C (see sheet 7006-81C) with a force of at least 15 N.
- The force required to withdraw gauge D (see sheet 7006-80D) shall not exceed 15 N.
- The lampholder shall retain gauge E (see sheet 7006-80E) with a force of at least 1 N.
- Contact-making shall be checked by use of gauges F (see sheet 7006-81F) and G (see sheet 7006-81G).

VERIFICATION

Pour les douilles PG12 et PGX12, l'acceptation et la réalisation du contact sur les culots PG12-.. et PGX12-.. doivent être vérifiées au moyen de calibres, dans l'ordre suivant:

- La douille doit accepter les calibres A (voir feuille 7006-81A) et B (voir feuille 7006-81B) avec une force d'insertion n'excédant pas 100 N.
- La force requise pour retirer le calibre A (voir feuille 7006-81A) ne doit pas excéder 80 N.
- La douille doit accepter le calibre C (voir feuille 7006-81C) d'une seule manière.
- La douille doit retenir le calibre C (voir feuille 7006-81C) avec une force d'au moins 15 N.
- La force requise pour retirer le calibre D (voir feuille 7006-80D) ne doit pas excéder 15 N.
- La douille doit retenir le calibre E (voir feuille 7006-80E) avec une force d'au moins 1 N.
- La réalité du contact doit être vérifiée au moyen des calibres F (voir feuille 7006-81F) et G (voir feuille 7006-81G).

Copyright National Electrical Manufacturers Association
Provided by IHS under license with NEMA
No reproduction or networking permitted without license from IHS
Not for Resale

P12.4d LAMPHOLDER

The designation assigned in accordance with the system of the International Electrotechnical Commission (IEC) is P12.4d. At the time of issuance of this Standard there was no comparable IEC Publication in existence. It is commonly known as the PCT 3-1/4 in the United States.

This drawing is intended only to indicate the dimensions to be controlled.

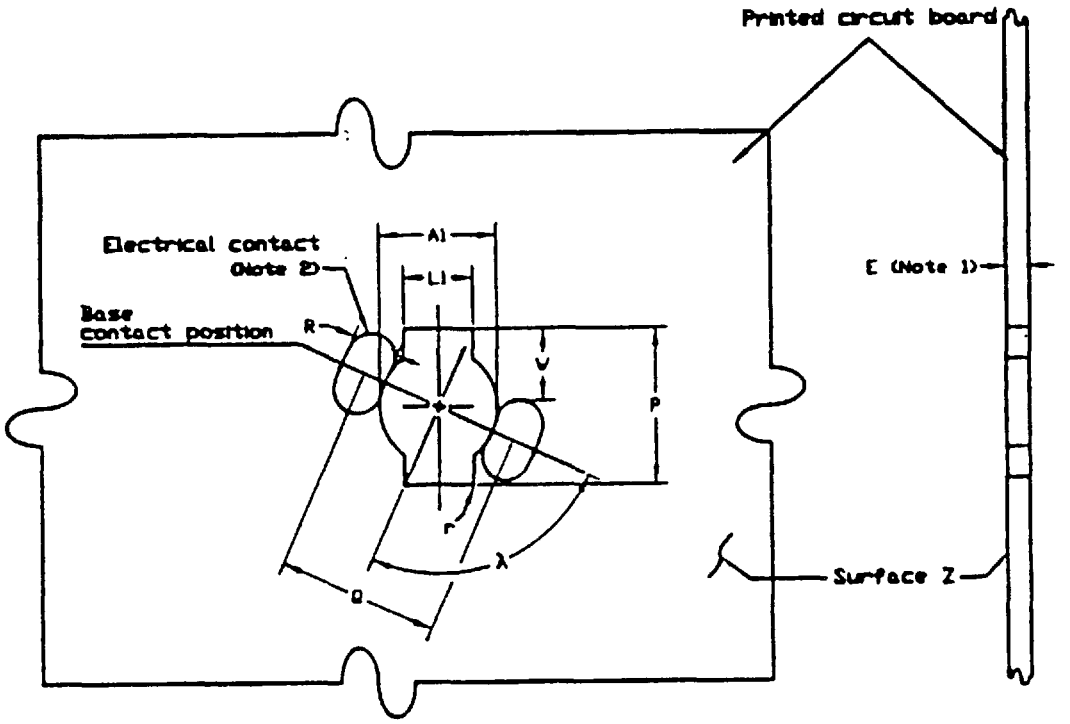

Copyright National Electrical Manufacturers Association
Provided by IHS under license with NEMA
No reproduction or networking permitted without license from IHS
Not for Resale

Reference	Standard Dimensions (in.)		
	Min	Nom	Max
A1	12.70	—	12.97
E (Note 1)	—	1.52	—
L1	6.51	—	6.76
P	—	15.88	—
Q	—	16.68	—
R (Note 2)	—	3.50	—
W (Note 2)	5.84	—	6.60
r	—	0.81	—
λ	—	90°	—

NOTES

1 Dimension E represents a typical board thickness including the electrical contact. Other thicknesses are optional.

2 Electrical contact configuration is optional.

3 This holder provides clearances for easy insertion of a base. Therefore, retention of the base is not assured and means of retention should be provided by the base itself.

GAUGING

See ANSI C81.63-1991 Standard Sheet 3-550-1

BASE

See ANSI C81.61-1990 Standard Sheet 1-550-1

Copyright National Electrical Manufacturers Association
Provided by IHS under license with NEMA
No reproduction or networking permitted without license from IHS
Not for Resale

P28 Medium Prefocus Lampholder

ANSI C81.62-1991
Std Sheet 2-700-1

The designation assigned to this lampholder by the International Electrotechnical Commission (IEC) is P28.

This standard sheet is equivalent to IEC Publication 61.

The drawing is intended only to indicate the dimensions to be controlled.

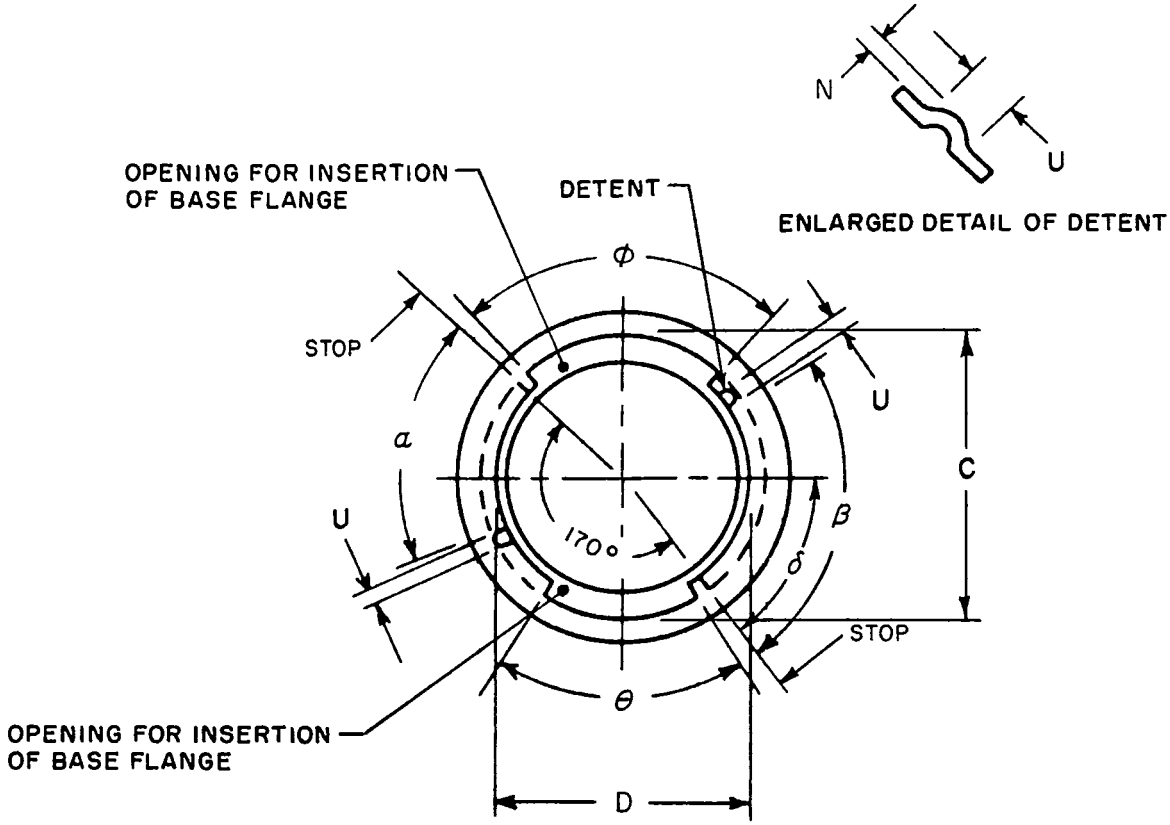

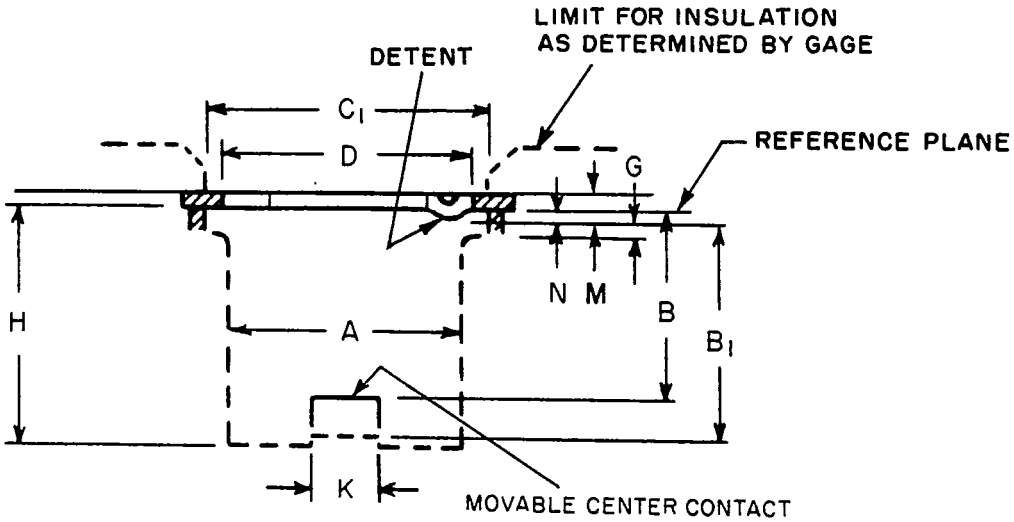

Copyright National Electrical Manufacturers Association
Provided by IHS under license with NEMA
No reproduction or networking permitted without license from IHS
Not for Resale

ANSI C81.62-1991
Std Sheet 2-700-1

Reference	Standard dimensions in			Nearest metric equivalent mm		
	Min	Nom	Max	Min	Nom	Max
A	1.095	–	–	27.81	–	–
B	–	–	0.933	–	–	23.7
B_1	1.047	–	–	26.6	–	–
C	1.339	–	1.353	34.01	–	34.37
C_1	1.339	–	–	34.01	–	–
D	1.121	–	1.140	28.47	–	28.96
G	0.068	–	–	1.73	–	–
H	1.100	–	–	27.94	–	–
K	–	0.40 approx	–	–	10.16 approx	–
	–					–
M	0.032	–	0.114	0.8	–	2.90
N	0.039	–	0.050	1.0	–	1.27
U	–	–	0.110	–	–	2.79
α (degrees)	62°	–	66°	–	–	–
β (degrees)	82°	–	86°	–	–	–
θ (degrees)	62°	–	68°	–	–	–
ϕ (degrees)	82°	–	88°	–	–	–
δ (degrees)	–	40°	–	–	–	–
ε (degrees)	–	170°	–	–	–	–

NOTES

1 It is intended that a lamp base be inserted into the holder with the flanges entering the appropriate openings and is then turned clockwise until rotation is limited by the stops; counter-rotation is restricted by the retention detents.

2 The base is centered in the holder by means of the circumferential edges of the wings in combination with dimension C of the holder.

3 The creepage distance between live parts and also between live parts and other metal parts shall be not less than 0.118 in (3 mm).

4 The contact force of the center contact in the position of B = 0.953 in (24.2 mm) shall be not less than 1.12 lbf (5 N) and in the depressed position of B_1 = 1.047 in (26.6 mm), not more than 4.50 lbf (20 N).

Gauging

"Go" Gauge 3-703: It shall be possible to insert this gauge into a lampholder without using undue force until it reaches the normal operating position of a lamp.

See ANSI C81.63 for gauges.

Bases

See ANSI C81.61, Standard Sheet 1-700.

Copyright National Electrical Manufacturers Association
Provided by IHS under license with NEMA
No reproduction or networking permitted without license from IHS
Not for Resale

P30 Candelabra Prefocus Lampholders

This standard sheet covers both single and double-contact lampholders.

The designation assigned by the International Electrotechnical Commission (IEC) to the single-contact lampholder is P30s-10.3 and to the double-contact lampholder is P30d-10.3.

The P30s holder differs from the Precision Holder P30s shown in IEC Publication 61-2, Lamp Caps and Holders together with Gauges for the Control of Interchangeability and Safety, Part 2: Lampholders, in many aspects, because it is not designed for highly precise applications.

The drawing is intended only to indicate the dimensions to be controlled.

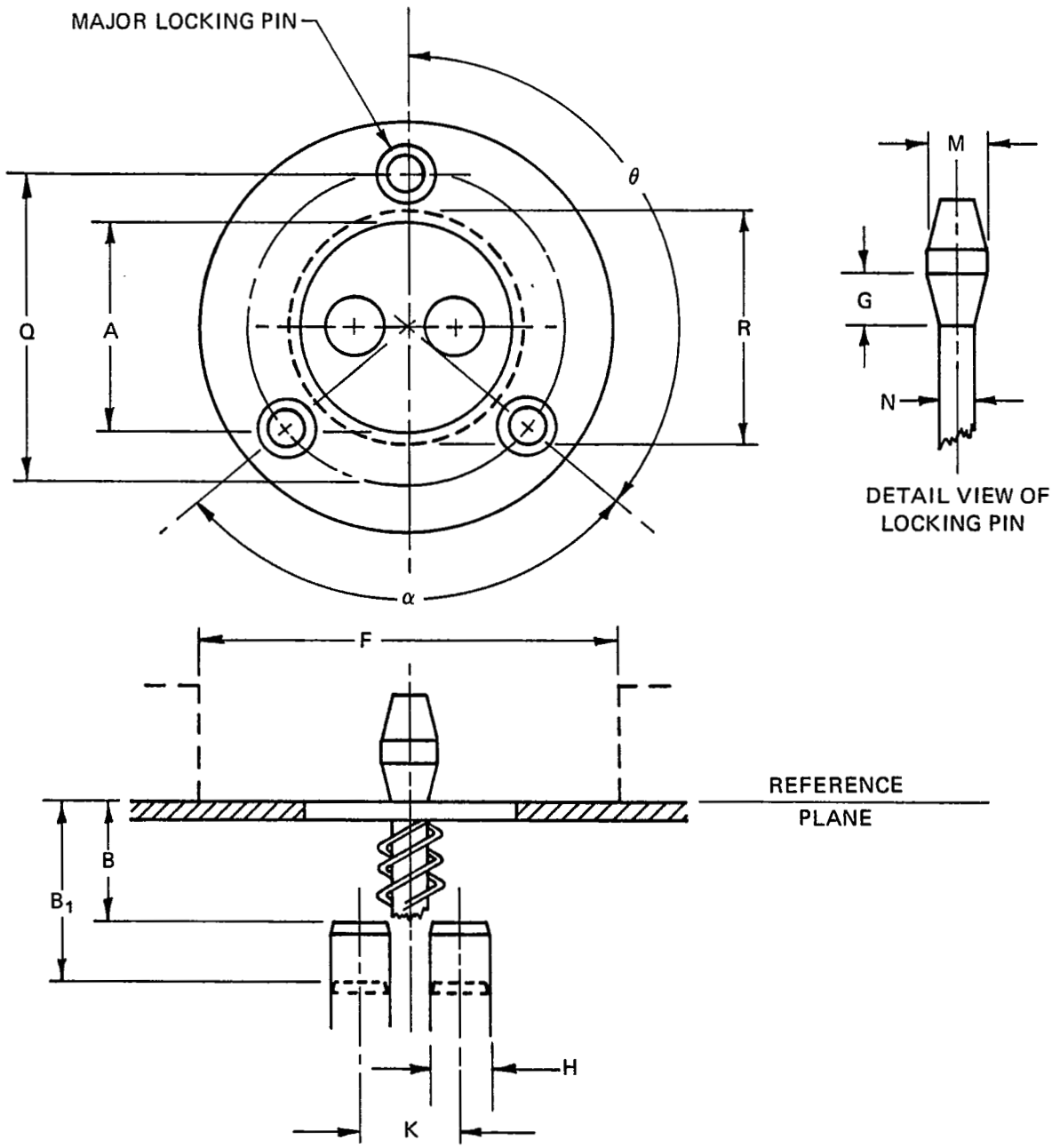

Figure 1 – Double-contact lampholder

Copyright National Electrical Manufacturers Association
Provided by IHS under license with NEMA
No reproduction or networking permitted without license from IHS
Not for Resale

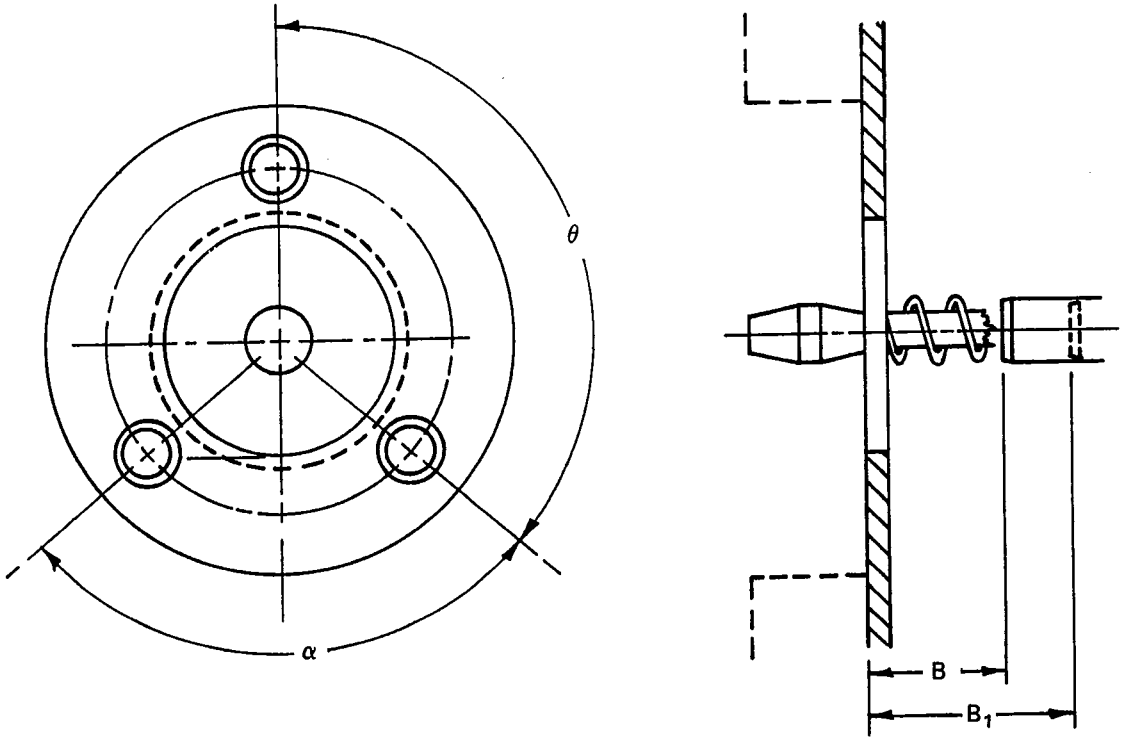

Figure 2 – Single-contact lampholder

Copyright National Electrical Manufacturers Association
Provided by IHS under license with NEMA
No reproduction or networking permitted without license from IHS
Not for Resale

Reference	Standard dimensions in			Nearest metric equivalent mm		
	Min	Nom	Max	Min	Nom	Max
A	0.625	–	–	15.87	–	–
B (Note 4)	–	–	0.350	–	–	8.90
B_1 (Note 4)	0.516	–	–	13.10	–	–
F (Note 2)	1.190	–	–	30.22	–	–
G	0.065	–	0.080	1.65	–	2.03
H	–	–	0.218	–	–	5.54
K	0.272	–	0.290	6.90	–	7.37
M	0.175	–	0.185	4.44	–	4.70
N	0.072	–	0.075	1.82	–	1.91
Q	0.895	–	0.898	22.73	–	22.81
R (Note 3)	0.670	–	–	17.01	–	–
α (degrees)	–	100°	–	–	100°	–
θ (degrees)	–	130°	–	–	130°	–

NOTES

1 The means of retention shall make contact only with the prefocus ring of the lamp base.

2 F defines the diameter of the area to be kept clear for the prefocus collar of the base.

3 R defines a clearance zone that the locking pins shall not enter, to avoid interference with the upper body of a base.

4 Dimensions B and B_1 are specified so that these lampholders will accept the standard P30s-10.3 or P30d-10.3 bases. Bases with other collar positions may be in use, requiring different lampholder dimensions, but they are considered to be nonpreferred. Such bases would have a different identifier following the hyphen.

Gauging
Gauges have not been developed for this lampholder.

Base
See ANSI C81.61, Standard Sheet 1-709

Copyright National Electrical Manufacturers Association
Provided by IHS under license with NEMA
No reproduction or networking permitted without license from IHS
Not for Resale

LAMPHOLDERS

DOUILLES

P32 & PK32

Dimensions in millimetres - Dimensions en millimètres

The drawing is intended only to illustrate the dimensions essential for interchangeability.
Le dessin a pour seul but d'illustrer les dimensions essentielles pour l'interchangeabilité.

For details of caps P32 and PK32, see sheet 7004-111.
Pour les détails des culots P32 et PK32, voir feuille 7004-111.

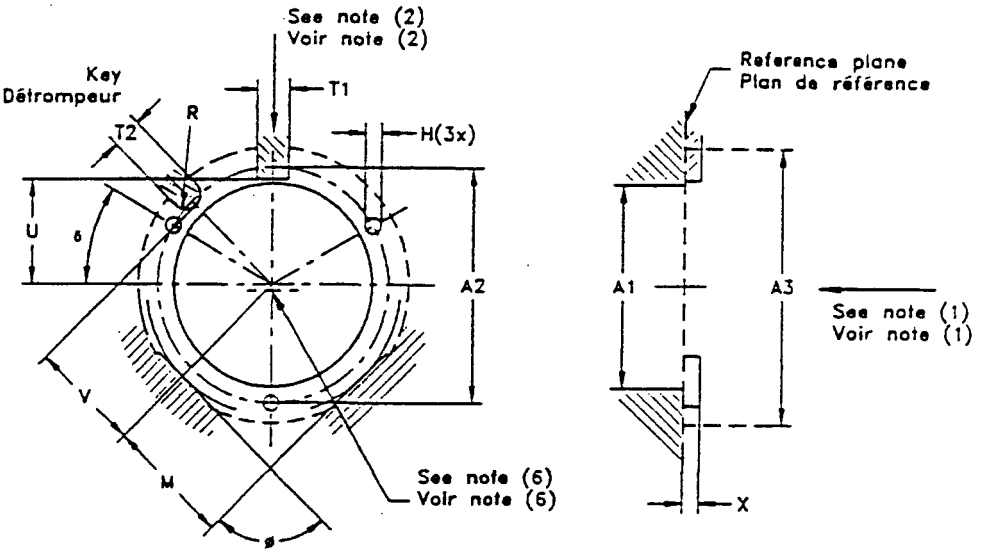

Only the P32-1 (PK32-1) holder is shown. For holders with different designations, see below.
Seule la douille P32-1 (PK32-1) est représentée. Pour les douilles d'autres désignations, voir ci-dessous.

KEYS
DETROMPEURS

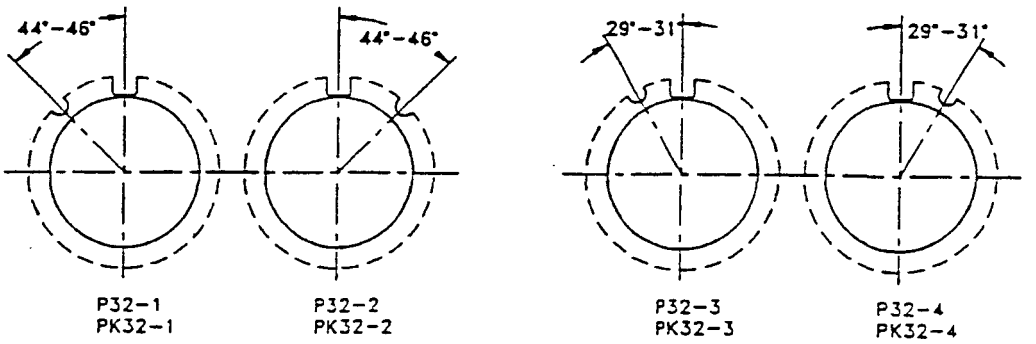

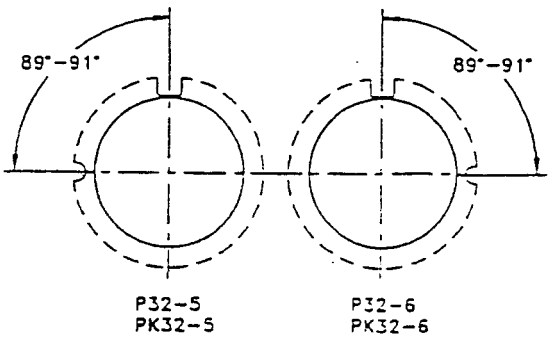

Copyright National Electrical Manufacturers Association
Provided by IHS under license with NEMA
No reproduction or networking permitted without license from IHS
Not for Resale

LAMPHOLDERS

DOUILLES

P32 & PK32

Dimensions in millimetres - Dimensions en millimètres

Dimension	Min.	Max.
A1 (4)	25	
A2	28,5	29,5
A3	32,1	--
H (3)	2	--
M (6)	16	
R (7)	½T2	
T1 (5)	3,8	3,9
T2 (7)	2	2,6
U	13,1	14,0
V	14,1	14,3
X (8)	1,5	--
δ	29°	31°
φ (6)	89°30'	90°30'

The holder shall be so designed that the means of retention of the lamp can be applied only when the lamp is in the correct position.
The means of retention shall make contact with the ring of the cap.

(1) The lamp shall be inserted in the direction of the arrow (axial direction), bulb first.
The retention force in this direction, exerted when the lamp is in position, shall be not less than 15 N and not greater than 30 N (under consideration).
This force shall preferably be applied later than the force mentioned in note (2), to ensure that the ring of the lampcap is pushed against the supporting area (V-block).
(2) The lamp shall be pushed in the direction of the arrow (radial direction).
The force exerted when the lamp is in position shall be not less that 2 N and not greater than 10 N (under consideration).
(3) These areas determine the reference plane.
(4) This dimension delineates the demarcation between the space which may be occupied by parts of the lamp and the space which may be occupied by parts of the holder/reflector.
(5) The hachured part may have a different shape, e.g. a round or oval pin, as long as its width complies with dimension T1. This part is intended to prevent rotation of the lamp cap.
(6) The supporting area for the ring of the cap is formed by the tangents of the circle with radius M at angle φ. The tangents (V-block supporting area) should be positioned such that the axis of a cylinder having a diameter of 32 mm placed in the V-block, coincides with the theoretical optical axis of the headlamp.
(7) The shape of the key need not be as shown. It may, for example, be cylindrical.
(8) Dimension X is also applicable to the key.

La douille doit être conçue de telle sorte que les moyens de retenue de la lampe ne puissent être appliqués que lorsque la lampe est dans la position correcte.
Les moyens de retenue doivent faire contact avec la collerette du culot.

(1) La lampe doit être insérée, l'ampoule en premier, dans la direction de la flèche (direction axiale).
La force de retenue exercée dans cette direction lorsque la lampe est positionnée ne doit pas être inférieure à 15 N ni supérieure à 30 N (à l'étude).
Afin d'assurer la pression de la collerette du culot de la lampe sur la zone d'appui (bloc en "V"), il convient que cette force soit appliquée après celle mentionnée dans la note (2).
(2) La lampe doit être glissée dans la direction de la flèche (direction radiale).
La force exercée lorsque la lampe est positionnée ne doit pas être inférieure à 2 N ni supérieure à 10 N (à l'étude).
(3) Ces zones déterminent le plan de référence.
(4) Cette dimension définit la démarcation entre l'espace qui peut être occupé par des parties de la lampe et celui qui peut être occupé par des parties de la douille/réflecteur.
(5) La partie hachurée peut avoir une forme différente, par exemple une broche ronde ou ovale, pourvu que sa largeur soit conforme à la dimension T1. Cette partie est destinée à empêcher la rotation du culot de la lampe.
(6) La zone d'appui de la collerette du culot est formée par les tangentes au cercle de rayon M et forment l'angle φ. Il convient que les tangentes (zone d'appui du bloc en "V") se positionnent de telle sorte que l'axe d'un cylindre de diamètre 32 mm placé dans le bloc en "V" coincide avec l'axe optique théorique de la lampe de projecteur-avant automobile.
(7) Il n'est pas nécessaire de représenter le détrompeur comme indiqué. Il peut être, par exemple, de forme cylindrique.
(8) La dimension X s'applique aussi au détrompeur.

Copyright National Electrical Manufacturers Association
Provided by IHS under license with NEMA
No reproduction or networking permitted without license from IHS
Not for Resale

P40 Mogul Prefocus Lampholder

The designation assigned to this lampholder by the International Electrotechnical Commission (IEC) is P40s/41.

There are several differences between this lampholder and the similarly identified holder found in IEC Publication 61-2, *Lamp Caps and Holders together with Gauges for the Control of Interchangeability and Safety, Part 2: Lampholders*. Primarily the A, B_1, C, and D dimensions differ; this lampholder has a looser tolerance on A, a shorter B_1 contact travel, a smaller C diameter, and a larger D diameter. These differences would not prevent the entry of foreign lamp bases. The center contact diameter is nominally larger than the IEC drawing, and the flange keyways are larger, which will not affect the fit. The limits for insulation above the reference plane are smaller for this holder.

The drawing is intended only to indicate the dimensions to be controlled.

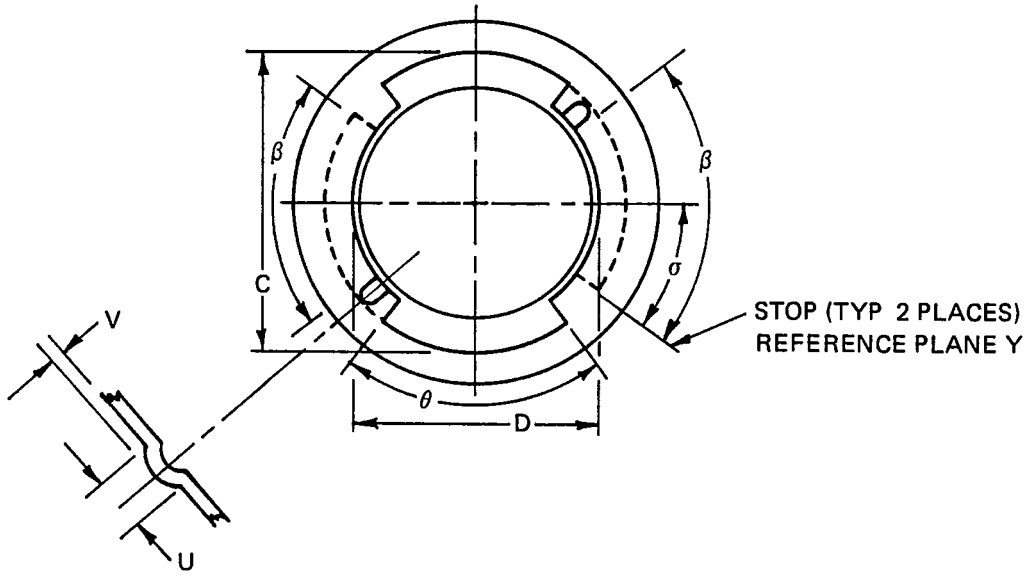

ENLARGED DETAIL
OF DETENT

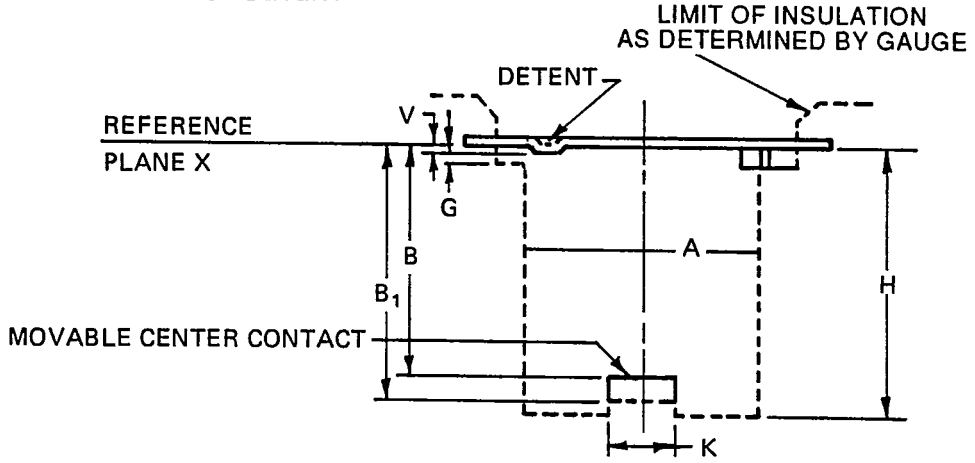

Copyright National Electrical Manufacturers Association
Provided by IHS under license with NEMA
No reproduction or networking permitted without license from IHS
Not for Resale

Gauging
"Go" Gauge 3-718: It shall be possible to insert the gauge into a lampholder without using undue force, until it reaches the normal operating position of a lamp.

See ANSI C81.63 for gauges.

Base
See ANSI C81.61, Standard Sheet 1-715.

Copyright National Electrical Manufacturers Association
Provided by IHS under license with NEMA
No reproduction or networking permitted without license from IHS
Not for Resale

R7s Recessed Single-Contact Lampholder

The designation assigned to this lampholder by the International Electrotechnical Commission (IEC) is R7s.

This standard sheet is equivalent to IEC Publication 61.

The drawings are intended only to indicate the dimensions to be controlled.

Type 1 and 2 holders are designed for use with Type A and B bases (See ANSI C81.61, Standard Sheet 1-770). The Type 3 holder is designed for use with the Type A base only:

Type 1 Holder

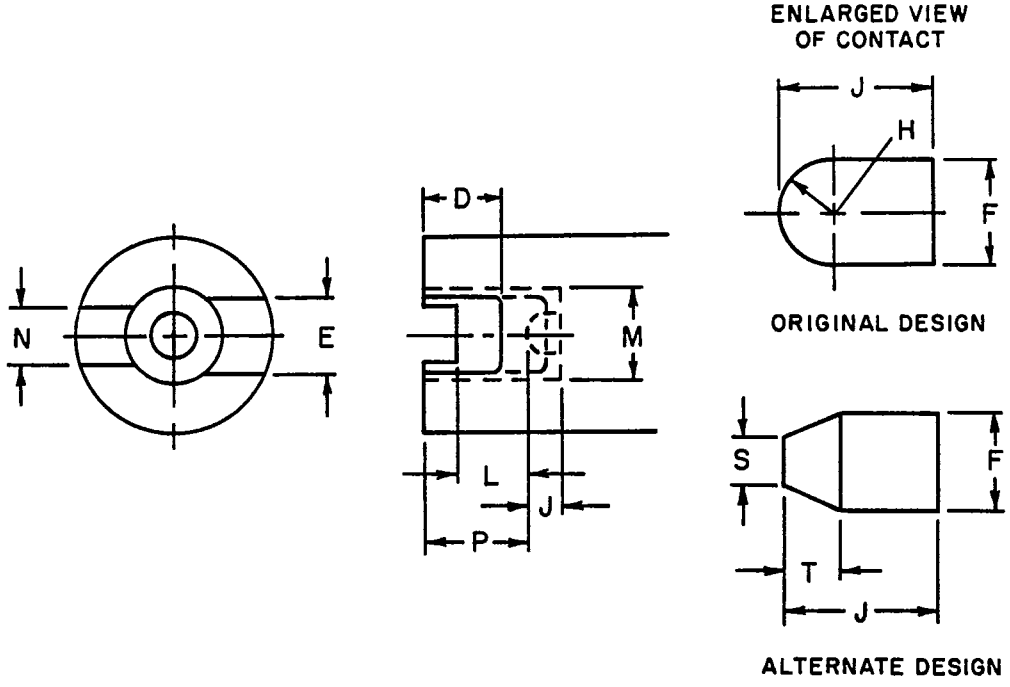

Copyright National Electrical Manufacturers Association
Provided by IHS under license with NEMA
No reproduction or networking permitted without license from IHS
Not for Resale

Reference	Standard dimensions in		Nearest metric equivalent mm	
	Min	Max	Min	Max
D (Note 1)	–	–	–	–
E (Note 2)	0.300	–	7.62	–
F	0.118	0.140	3.0	3.56
H	0.040	0.070	1.02	1.78
J	0.095	–	2.41	–
L (Note 3)	–	0.110	–	2.79
M (Note 4)	0.320	–	8.13	–
N (Note 5)	0.225	–	5.72	–
P	–	0.195	–	4.95
S	0.050	0.085	1.27	2.16
T	0.035	–	0.89	–

NOTES

1 Dimension D (the depth of the opening through which the base must pass when the lamp is being inserted) may be either greater or less than dimension P; if it is less than P, then B, is the critical dimension for lamp insertion (See ANSI C81.63, Standard Sheet 3-770). If it is greater than P, then B_2 is the critical dimension.

2 Dimension E is the opening through which the base must pass when the lamp is being inserted.

3 Dimension L is the maximum distance that can exist to any part of the insulation structure that is required to clear the quartz shoulder of the lamp.

4 For the Type 1 holder, dimension M is the minimum clearance that must be allowed at the back of the recess so that the lamp base can center itself on the contact.

5 Dimension N is the minimum opening that must be allowed for the quartz shoulder if part of the insulation projects beyond dimension L.

Copyright National Electrical Manufacturers Association
Provided by IHS under license with NEMA
No reproduction or networking permitted without license from IHS
Not for Resale

Type 2 and 3 Holders

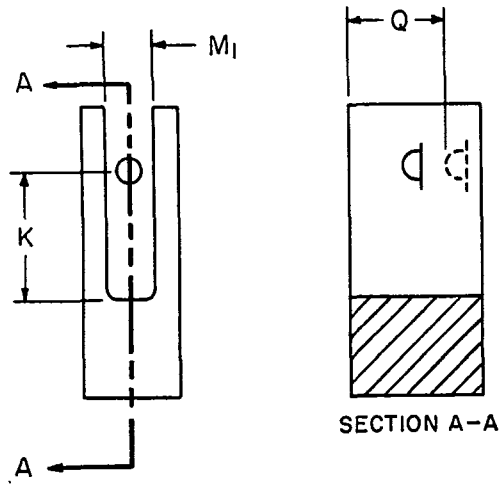

NOTE – Contacts are the same as for Type 1

Ref.	Standard dimensions in				Nearest metric equivalent mm			
	Type 2		Type 3		Type 2		Type 3	
	Min	Max	Min	Max	Min	Max	Min	Max
K	0.450	–	–	0.435	–	11.43	–11.05	–
M_1 (Note 1)	0.380	–	–	0.320	–	9.65	–8.13	–
Q (Note 2)	–	0.600	–	0.600	–	15.24	–15.24	–

NOTES

1 For the Types 2 and 3 holders, dimension M_1, is the width of the slot.

2 Dimension Q indicates the clearance of the front face of the lampholder when the contact is sufficiently depressed to permit insertion of the "maximum lamp" gauge (See ANSI C81.63, Standard Sheet 3-770).

Clearance for live parts

Holder design shall be such that, when no lamp is in place, the contact cannot be touched by a test probe having a hemispherical end with a radius of 0.205 inch (5.21 mm).

Lamp insertion

At least one holder of each pair shall have a movable portion to permit insertion of the lamp.

Axial alignment

Lampholders shall be designed to allow for a 5-degree misalignment between the lamp axis and the lampholder axis.

Copyright National Electrical Manufacturers Association
Provided by IHS under license with NEMA
No reproduction or networking permitted without license from IHS
Not for Resale

Contact force

The maximum force exerted on the lamp contacts shall not exceed 7 lbf (31.1 newtons).

The minimum force needed to maintain good electrical contact is dependent upon the type of contact materials used. Care should be taken to choose a suitable combination of contact force and contact materials so as to ensure adequate electrical contact under prolonged high-temperature operation.

Combined Pair of Holders

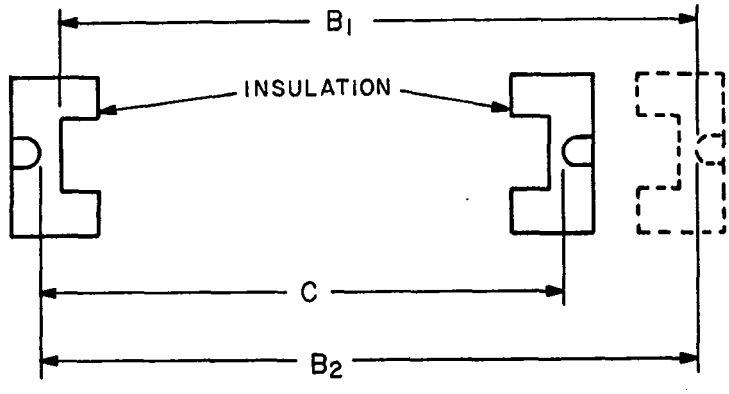

C = Rest position of contacts with no lamp in place.

B1, B2 = Position of contacts with one or both holders fully depressed.

Dimension for lamp insertion

It should be noted that, depending on the design of the holder, the most critical dimension during the insertion of the lamp can be formed either by a part of the insulation (dimension B_1) or by the contact (dimension B_2) of the nondepressed holder.

Limits

The minimum limit for dimensions B_1 and B_2 shall be 0.040 inch (1.02 mm) greater than the B max dimension for the corresponding lamp (see American National Standard *Specification for Tubular Tungsten-Halogen Lamps*, C78.260-1977).

The maximum limit for dimension C shall be 0.040 inch (1.02 mm) less than the C min dimension for the corresponding lamp (See American National Standard C78.260-1977).

Requirements

With the holders mounted at the minimum permissible spacing (as recommended by the holder manufacturer), and with one or both holders fully depressed, dimension B_1 or B_2 – whichever is applicable – shall not be less than the limit given above.

With the holders mounted at the maximum permissible spacing (as recommended by the holder manufacturer) dimension C shall not exceed the limit given above.

Copyright National Electrical Manufacturers Association
Provided by IHS under license with NEMA
No reproduction or networking permitted without license from IHS
Not for Resale

Gauging

Gauging Combined Pair of Lampholders

"Go" Gauge 3-770: It shall be possible to insert the gauge into a combined pair of holders mounted at the minimum permissible spacing as recommended by the holder manufacturer. Gauges for individual lampholders have not been developed.

See ANSI C81.63 for gauges.

Base

See ANSI C81.61, Standard Sheet 1-770.

Copyright National Electrical Manufacturers Association
Provided by IHS under license with NEMA
No reproduction or networking permitted without license from IHS
Not for Resale

R17d Recessed Double-Contact Lampholder

The designation assigned to this base by the International Electrotechnical Commission (IEC) is R17d.

This standard sheet is equivalent to IEC 61.

The drawings are intended only to indicate the dimensions to be controlled. They also illustrate the two basic types of contacts that are in common use.

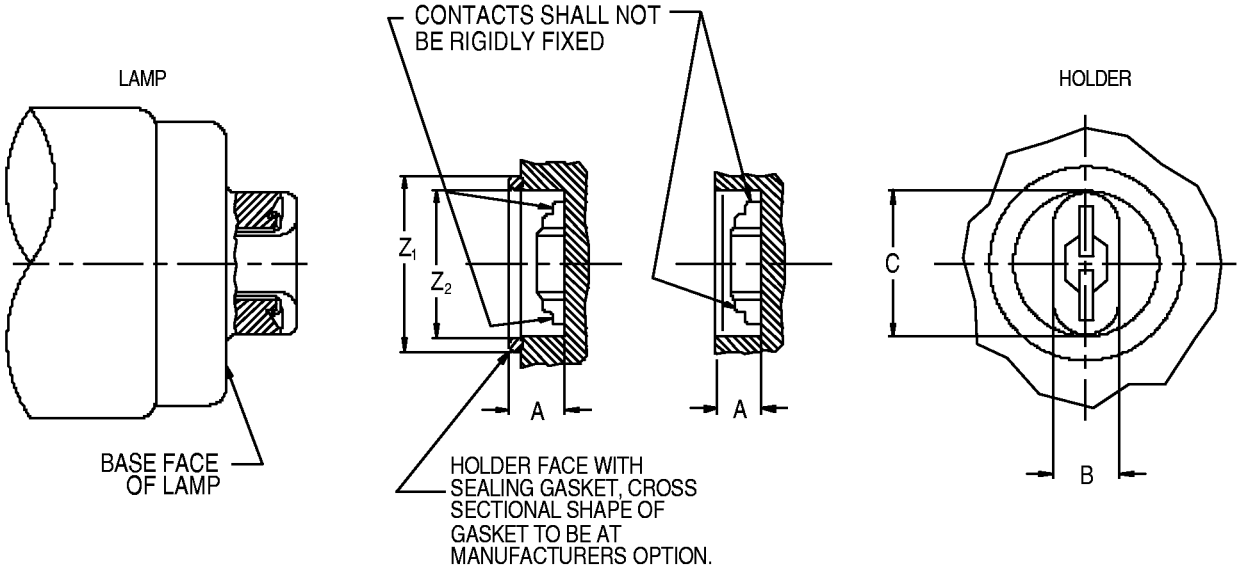

Figure 1 – End of corner contacts

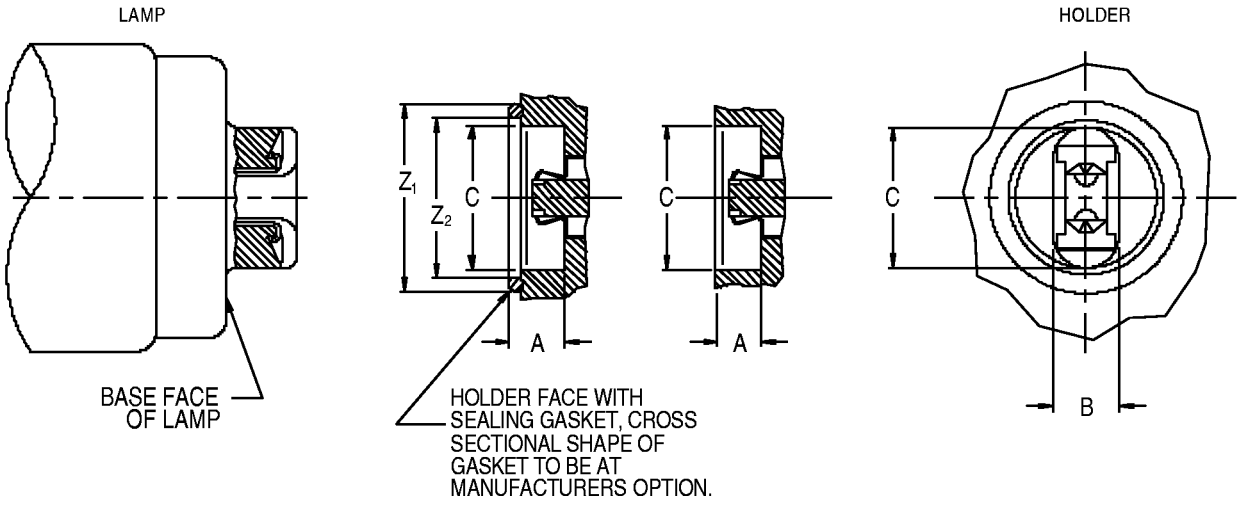

Figure 2 – Internal wiping contacts

Copyright © 1998 by American National Standard Lighting Group - NEMA
1300 North 17th Street, Suite 1847, Rosslyn, VA 22209
Copyright National Electrical Manufacturers Association
Provided by IHS under license with NEMA
No reproduction or networking permitted without license from IHS
Not for Resale

Reference	Requirements
A	The unobstructed depth from the holder face shall be not less than 0.320 inch (8.13 mm) (See NOTES 1 and 2).
B, C	The width and length of the opening shall be great enough to accommodate the "Go" gauge as shown on Standard Sheet 3-56 and to ensure that a lamp may be removed in any direction without binding such that breakage of the base boss could result. Maximum values of width and length are established by the requirements of the contact-making gauge (See ANSI C81.63, Standard Sheets 3-781 and 3-785) and the application of the test probe (See section on Clearances).
Z_1, Z_2	Z_2 = 0.750 inch (19.1 mm) max. Z_1 = 0.896 inch (22.76 mm) max. Exceeding these limits gives no assurance that the gasket will have a flat surface of the base on which to seat.

NOTES:

1 For gasketed designs of holders, the unobstructed depth shall not be less than 0.340 inch (8.64 mm) on new lampholders or less than 0.320 inch (8.13 mm) should the gasket be fully compressed or removed, whichever results in the smaller measurement.

2 It is recognized that older designs of holders exist in which the lamp base boss rests on the bottom of the holder cavity. In such cases, a minimum depth of 0.307 inch (7.80 mm) is accepted for the holder cavity.

General design features

The design of the holder shall make provision for the movement of one or both of the holders, or a section of one or both of the holders, in order to permit the insertion of the lamp and to accommodate the variations in the length of the lamps. The design shall also allow for a misalignment of 3º between the axis of the lamp and the axis of the lampholder.

During operation, it is normal for lampholders to reach temperatures of 200º F (93º C). Contacts should be designed to withstand these temperatures without deformation for the life of the fixture.

Copyright © 1998 by American National Standard Lighting Group - NEMA
1300 North 17th Street, Suite 1847, Rosslyn, VA 22209

Copyright National Electrical Manufacturers Association
Provided by IHS under license with NEMA
No reproduction or networking permitted without license from IHS
Not for Resale

Contacts

Contact may be made with the lamp either on the ends of the lamp contacts, or on the internal surfaces of the lamp contacts, or a combination of both. Figures 1 and 2 illustrate two of the possible variations. The electrical contacts shall be so designed that they will (1) make and maintain electrical contact with the "minimum base" gauges ANSI C81.63, Standard Sheets 3-781 and 3-785, and (2) will not prevent the acceptance of the "maximum base" gauges ANSI C81.63 Standard Sheets 3-780 and 3-784.

Contact resistance

The resistance of the lampholder contacts and connections, when measured as follows, shall not exceed 0.200 ohm.

a) On lampholders equipped with leads, the resistance shall be measured between points 3 inches (76.2 mm) from where the leads come out of the holder.

b) On holders without leads, it will be necessary to attach leads of the minimum size for which the holder was designed (but not smaller than No. 18AWG or 0.75 mm^2 solid wire). The resistance shall be measured between points 3 inches (76.2 mm) from where the leads come out of the holder.

c) The lamp base used shall meet the dimensional requirements of ANSI C81.61 Standard Sheet 1-777 and shall have shorted contacts with overall resistance not in excess of 0.01 ohm.

d) The base shall be fully seated in the holder, no matter what the position of the plunger.

e) Resistance measurements shall be made by the bridge method.

Spring loading

The force required to fully compress the spring on the compressible end shall be not less than 8 lbf (35.6 newtons) not greater than 20 lbf (89.0 newtons).

Clearance for live parts

When no lamp is in place, a test probe having a hemispherical end with a radius of 0.205 inch (5.21 mm) shall not be able to contact live metal parts.

Copyright © 1998 by American National Standard Lighting Group - NEMA
1300 North 17th Street, Suite 1847, Rosslyn, VA 22209
Copyright National Electrical Manufacturers Association
Provided by IHS under license with NEMA
No reproduction or networking permitted without license from IHS
Not for Resale

Gauging

When gauging individual lampholders:

"Go" Gauge 3-780: It shall be possible to insert the holder into the recess of the gauge until the face of the holder is flush with surface x. (For older lampholder designs which have a shallower cavity, surface X of the gauge may not always be able to touch the holder face; but the separation, if any, should not exceed 0.015 inch (0.38 mm). It shall be possible to rotate the gauge axis in a manner that provides an axial misalignment of 3 degrees between the gauge and holder.

Gauge for Checking Contact-making, Gauge 3-781: When the gauge is inserted in the holder, electrical contact shall be established between the gauge and holder contacts. The contact shall be maintained regardless of any movement that may be possible between the gauge and holder. Contact shall also be maintained when the gauge axis is rotated in a manner that provides an axial misalignment of 3 degrees between the gauge and holder.

When gauging lampholder spacing:

Double-ended Gauge for Checking Maximum Length Lamp and Minimum Lampholder Spacing, Gauge 3-784: It shall be possible to insert and remove this gauge from holders at their minimum permissible spacing (as recommended by the manufacturer) with input to the nominal length lamp of 18 inches (457.2 mm), without difficulty or breakage of only holder parts.

Double-ended Gauge for Checking Minimum Length Lamp and Maximum Lampholder Spacing, Gauge 3-785: It shall be possible to insert this gauge in holders at their maximum permissible spacing (as recommended by the manufacturers) with respect to a nominal length lamp of 18 inches (457.2). The insertion shall cause both indicator lamps of the test circuit to light, and shall remain lighted in spite of any possible axial movement between the two holders. When inserting the gauge to T12 (T38) size holders, the force on the gauge shall not be less than 2 lbf (8.9 N). For lampholders designed to accept PG17 and TH17 lamps, the force shall not be less than 4 lbf (17.8 N).

See ANSI C81.63 for gauges.

Push-in terminals

Lampholders employing push-in type terminals should be designed to accept connecting wires having strip lengths ranging from a minimum of 0.359 inch (9.13 mm) to a maximum of 0.453 inch (11.51 mm). (It is recommended that there may be existing designs that do not meet this requirement.)

Base

See ANSI C81.61, Standard Sheet 1-777.

Copyright © 1998 by American National Standard Lighting Group - NEMA
1300 North 17th Street, Suite 1847, Rosslyn, VA 22209

Copyright National Electrical Manufacturers Association
Provided by IHS under license with NEMA
No reproduction or networking permitted without license from IHS
Not for Resale

SX4 Submidget Flanged Lampholder

The designation assigned to this lampholder in accordance with the coding system of the International Electrotechnical Commission (IEC) is SX4.

At the time of publication there was no equivalent IEC standard.

The drawing is intended only to indicate the dimensions to be controlled.

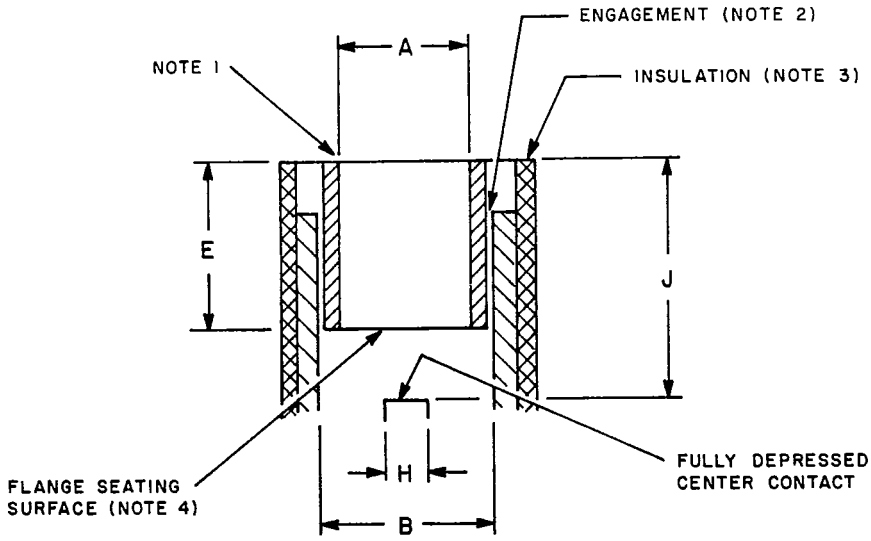

Copyright National Electrical Manufacturers Association
Provided by IHS under license with NEMA
No reproduction or networking permitted without license from IHS
Not for Resale

Reference	Standard dimensions in			Nearest metric equivalent mm		
	Min	Nom	Max	Min	Nom	Max
A (dia)	0.160	–	0.166	4.06	–	4.22
B (dia) (Note 5)	0.190	–	–	4.83	–	–
E (Note 6)	0.090	–	0.120	2.28	–	3.05
H	–	0.120	–	–	3.05	–
J	0.165	–	0.209	4.19	–	5.31

NOTES

1 In many applications, a cover or lens is attached directly to the inner section of the lampholder. In such an arrangement, space shall be provided for the bulb of the lamp to ensure interchangeability of lamps.

2 Where separate parts are used to provide dimensions A and B, the engagement surface shall provide electrical continuity and mechanical stability by means of mating screw threads or equally effective features.

3 Insulation layer should be provided for those applications where mounting case is not part of the electrical return circuit.

4 Alternatively, three longitudinal-bearing ridges (equally spaced circumferentially) may be provided.

5 The relationship between diameter B and dimension J shall be as follows:

a) In lampholder designs requiring the lamp to be inserted from the bulb end of the holder, diameter B shall be applicable over the full length of dimension J.

b) In lampholders permitting insertion of the lamp from the eyelet contact end of the holder, diameter B shall be applicable only over that portion of dimension J that is not in the zone described by dimension E.

6 Dimension E is length over which diameter A applies.

7 This lampholder is appropriate for low voltage applications only.

Gauging

NOTE – Separate standard sheets have not been developed for this holder. Commercially available plug gauges may be used for gauging.

1 With diameter A exposed, it shall be possible to insert a plug gauge that is 0.160 inch through 0.001 inch in diameter into the zone defined by dimension E.

2 It shall be possible to insert a plug gauge that is 0.162 inch through 0.001 inch in diameter into the diameter A opening.

3 The lampholder shall accept a plug gauge that is 0.187 inch through 0.001 inch in diameter for either the full length of dimension J or that portion of J that does not include dimension E. The intended-direction of lamp entry into the holder shall determine the particular requirement.

Base

See ANSI C81.61, Standard Sheet 1-850.

Copyright National Electrical Manufacturers Association
Provided by IHS under license with NEMA
No reproduction or networking permitted without license from IHS
Not for Resale

LAMPHOLDERS

S14

Dimension in millimetres
For details of caps S14, see sheet 7004-112.

The lampholder shall accept and retain the relevant cap shown on sheet 7004-112.

GAUGING:
Lampholders S14d shall fulfill the tests of the appropriate gauges shown on sheets 7006-112D and 7006-112E.

Lampholders S14s shall fulfill the tests of the appropriate gauges shown on sheets 7006-112A, 7006-112B and 7006-112C.

The application of the gauges has to be done in the order shown.

Copyright National Electrical Manufacturers Association
Provided by IHS under license with NEMA
No reproduction or networking permitted without license from IHS
Not for Resale

LAMPHOLDERS

DOUILLES

W2.5x16

Dimensions in millimetres - Dimensions en millimètres

The drawing is intended only to illustrate the dimensions essential for interchangeability.
Le dessin a pour seul but d'illustrer les dimensions essentielles pour l'interchangeabilité.

For details of bases W2.5x16, see sheet 7004-104.
Pour les détails des socles W2.5x16, voir feuille 7004-104.

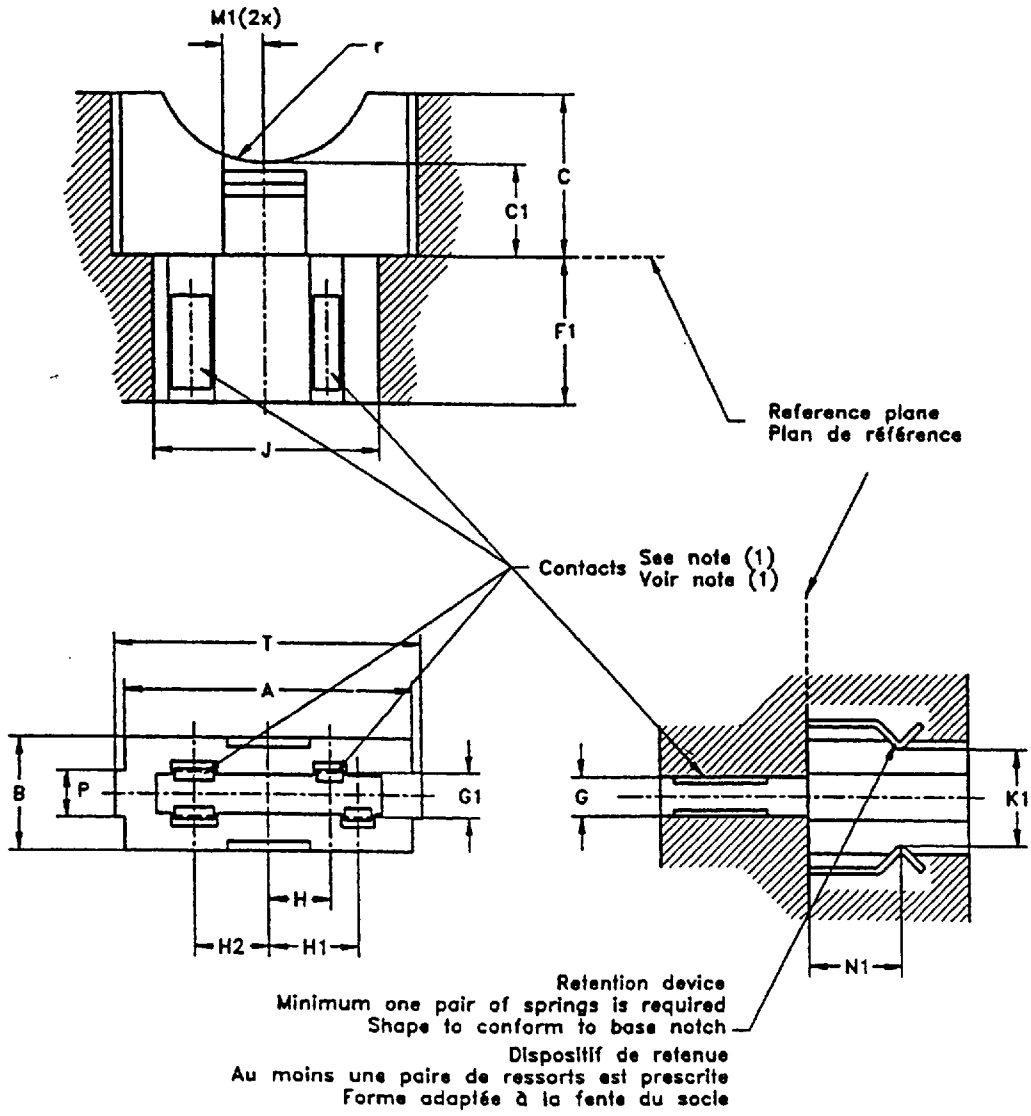

Type A (W2.5x16q) holder shown.
La douille représentée est du type A (W2.5x16q).

Copyright National Electrical Manufacturers Association
Provided by IHS under license with NEMA
No reproduction or networking permitted without license from IHS
Not for Resale

LAMPHOLDERS

DOUILLES

W2.5x16

Dimensions in millimetres - Dimensions en millimètres

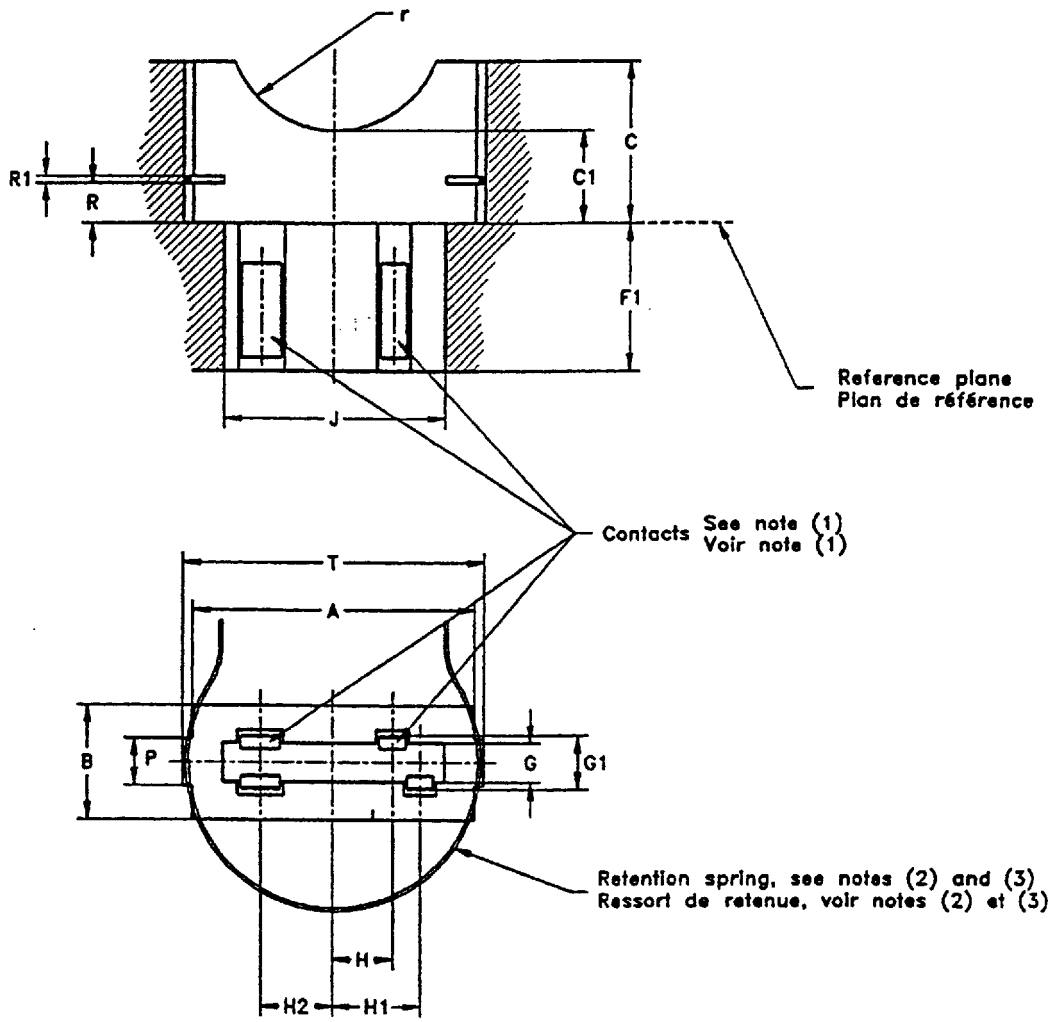

Type B (W2.5x16q) holder shown.
La douille représentée est du type B (W2.5x16q).

7005-104-1

Copyright National Electrical Manufacturers Association
Provided by IHS under license with NEMA
No reproduction or networking permitted without license from IHS
Not for Resale

LAMPHOLDERS

DOUILLES

W2.5x16

Dimensions in millimetres - Dimensions en millimètres

Dimension	Min.	Max.
A	19,7	21,0
B	8,25	8,60
C (4)	–	11,9
C1	–	6,8
F1	11,0	–
G	2,81	3,01
G1 (5)	4,3	–
H	4,45	
H1	6,45	
H2	5,45	

Dimension	Min.	Max.
J	16,3	16,6
K1 (7)	–	–
M1	–	8,0
N1	5,25	
P (W2.5x16d)	5,65	6,22
P (W2.5x16q)	3,15	3,94
R	2,85	3,05
R1(6)(7)	–	–
T	22,4	–
r	8,0	–

(1) W2.5x16d holders shall provide contacts for connection with only the outermost lead wires of the base.
(2) The retention spring shown for type B holders is typical. Other retention means may be used.
(3) The retention spring(s) of type B holders shall be smooth to allow insertion and withdrawal of the base.
(4) Dimension C applies in the center section of distance A.
(5) Moveable contacts shall be expandable to at least dimension G1, for free entrance of the base.
(6) The shape of the retention springs shall be such that the base is pressed against the reference plane of the holder.
(7) Dimensions K1 and R1 are under consideration for deletion, dependent on the establishment of suitable gauges and retention force limits.

(1) Les douilles W2.5x16d doivent assurer le contact uniquement avec les entrées de courant situées le plus à l'extérieur du socle.
(2) Le ressort de retenue des douilles du type B représenté est typique. D'autres moyens de retenue sont admis.
(3) Le ou les ressorts de retenue des douilles du type B doivent être suffisamment souples pour permettre l'insertion et l'extraction du socle.
(4) La dimension C s'applique à la section centrale de la distance A.
(5) Les contacts mobiles doivent être extensibles au moins jusqu'à la dimension G1, afin de faciliter l'insertion du socle.
(6) La forme des ressorts de retenue doit être telle que le socle soit maintenu appuyé contre le plan de référence de la douille.
(7) La suppression des dimensions K1 et R1 est à l'étude; elle dépend de la création de calibres appropriés et de la détermination des limites des forces de retenue.

GENERAL DESIGN FEATURES: Holders A and B differ in regard to the lamp retention features employed and the portion of the lamp base where the retention forces are applied.
Holder A mates with the slots in the long side of the bases. The retention springs of the holder provide the necessary force to hold the base in the proper position.
Holder B mates with the two protruding tabs at the ends (short side) of the base. A retention spring or similar device in the holder holds the base in position.

CARACTERISTIQUES GENERALES DE CONCEPTION: Les douilles A et B se différencient par les caractéristiques de retenue utilisées et par la zone où ces forces s'appliquent.
Les encoches situées sur le côté long du socle se logent dans la douille A. Les ressorts de retenue de la douille fournissent la force nécessaire au maintien du socle dans la bonne position.
Les deux languettes saillantes situées aux extrémités du côté court du socle se logent dans la douille B. Un ressort de retenue de la douille, ou un dispositif équivalent, assure le maintien du socle en position.

GAUGING: Lampholders W2.5x16d and W2.5x16q shall fulfil the tests of the relevant gauge shown on sheet 7006-104A.

VERIFICATION: Les douilles W2.5x16d et W2.5x16q doivent se conformer aux essais du calibre correspondant défini à la feuille 7006-104A.

Copyright National Electrical Manufacturers Association
Provided by IHS under license with NEMA
No reproduction or networking permitted without license from IHS
Not for Resale

LAMPHOLDER

DOUILLE

W4.3x8.5d

Dimensions in millimetres - Dimensions en millimètres

For details of cap W4.3x8.5d, see sheet 7004-115.
Pour les détails du culot W4.3x8.5d, voir feuille 7004-115.

The lampholder shall accept and retain lamps with caps W4.3x8.5d.
Reliable contact-making shall be ensured in axial and/or lateral direction over the tolerance in lamp length, as specified on the relevant lamp data sheet.

The movement of insertion may either be axial or lateral.

In lampholders for lateral insertion it is required that the functions of contact-making and retention are carried out by separate elements of the holder.

On the cap drawing, the area defined by dimensions B and C is provided for retention purposes.

GAUGING:
The application of the gauges shall be carried out in the order shown.

a) Lampholders for axial insertion
It shall be possible to insert and to remove the "Go" gauge of sheet 7006-115 with a force not exceeding .. N (under consideration). With the gauge in place, the force in axial direction shall not exceed .. N (under consideration). This is followed by the test with the gauge for testing contact-making of sheet 7006-115B.

b) Lampholders for lateral insertion
It shall be possible to insert and to remove the "Go" gauge of sheet 7006-115 with a force not exceeding .. N (under consideration) for each of the lampholders in turn.

With the gauge of sheet 7006-115A the maximum insertion and withdrawal force in the contact area is checked. The value shall not exceed .. N (under consideration) for each of the lampholders.

This is followed by the test with the gauge for testing contact-making of sheet 7006-115B.

La douille doit accepter et retenir les lampes à culots W4.3x8.5d.
Un contact fiable doit être assuré dans chaque direction soit axiale, soit latérale sur toute la tolérance de la longueur de la lampe, telle qu'elle est spécifiée dans la feuille de caractéristiques de la lampe correspondante.

Le mouvement d'insertion peut être soit axial, soit latéral.

Dans les douilles à insertion latérale il est prescrit que les fonctions de contact et de retenue soient exercées par des éléments distincts de la douille.

La zone définie par les dimensions B et C du dessin du culot est destinée à la fonction de retenue.

VERIFICATION:
Les calibres doivent être appliqués dans l'ordre suivant.

a) Douilles à insertion axiale
Il doit être possible d'introduire et d'extraire le calibre "Entre" de la feuille 7006-115 avec une force inférieure ou égale à .. N (à l'étude). Le calibre étant en place, la force en direction axiale ne doit pas excéder ..N (à l'étude). Cet essai est suivi par celui au calibre pour la vérification de la réalité du contact de la feuille 7006-115B.

b) Douilles à insertion latérale
Il doit être possible d'introduire et d'extraire le calibre "Entre" de la feuille 7006-115 avec une force inférieure ou égale à .. N (à l'étude). Cet essai doit être effectué successivement sur chaque douille.

La force maximale d'insertion et d'extraction dans la zone de contact est vérifiée à l'aide du calibre de la feuille 7006-115A. Sa valeur ne doit pas excéder ..N (à l'étude) pour chacune des douilles.

Cet essai est suivi par celui au calibre pour la vérification de la réalité du contact de la feuille 7006-115B.

Copyright National Electrical Manufacturers Association
Provided by IHS under license with NEMA
No reproduction or networking permitted without license from IHS
Not for Resale

Fluorescent Lamp Starter Holder

The drawing is intended only to indicate the dimensions to be controlled.

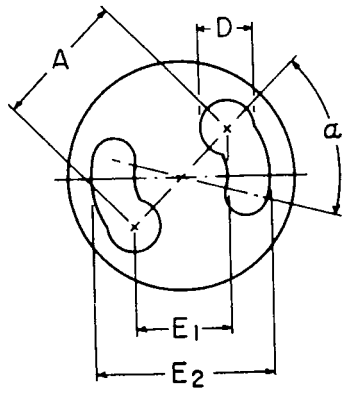

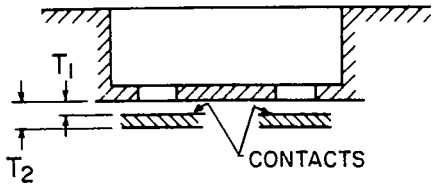

A- ALTERNATE CONTACT POSITION

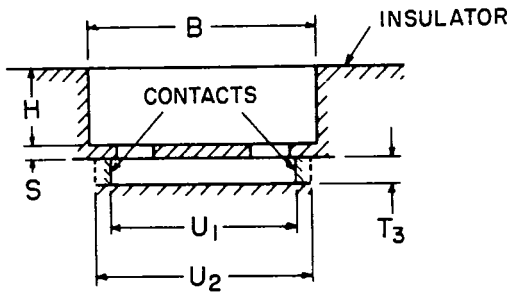

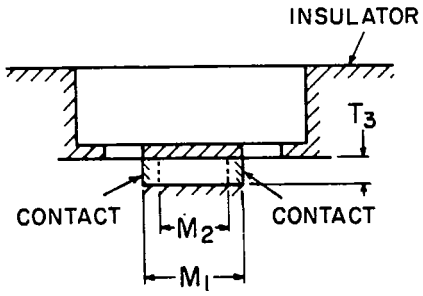

B-ALTERNATE CONTACT POSITION

Copyright National Electrical Manufacturers Association
Provided by IHS under license with NEMA
No reproduction or networking permitted without license from IHS
Not for Resale

Reference	Standard dimensions in		Nearest metric equivalent mm	
	Min	Max	Min	Max
A	0.492	0.508	12.5	12.9
B	0.855	–	21.7	–
D	0.212	–	5.4	–
E_1	0.342	0.362	8.7	9.2
E_2	0.638	0.658	16.2	16.7
H	–	0.591	–	15.0
M_1 (Note 1)	0.331	–	8.4	–
M_2 (Note 2)	–	0.291	–	7.4
S	–	0.059	–	1.5
T_1 (Note 1)	–	0.059	–	–
T_2 (Note 2)	0.098	–	2.5	–
T_3	0.091	–	2.3	–
U_1 (Note 1)	–	0.669	–	17.0
U_2 (Note 2)	0.709	–	18.0	–
α (degrees)	45°	–	–	–

NOTES

1 Rest position of contacts.

2 Contacts fully depressed.

Gauging

"Go" Gauges "A" and "B", Gauges 3-900: Both Gauges "A" and "B" shall, in turn, enter the starter holder smoothly until they reach the normal operating position of a starter.

Contact-making and Retention Gauge 3-901: When this gauge is inserted into the starter holder in the normal operating position of a starter, the test circuit lamps shall light. In this position the gauge shall be retained by the starter holder.

See ANSI C81.63 for gauges.

Copyright National Electrical Manufacturers Association
Provided by IHS under license with NEMA
No reproduction or networking permitted without license from IHS
Not for Resale

"UNO" THREAD FORM FOR MEDIUM SCREW LAMPHOLDERS

This drawing is intended only to indicate the dimensions to be controlled.

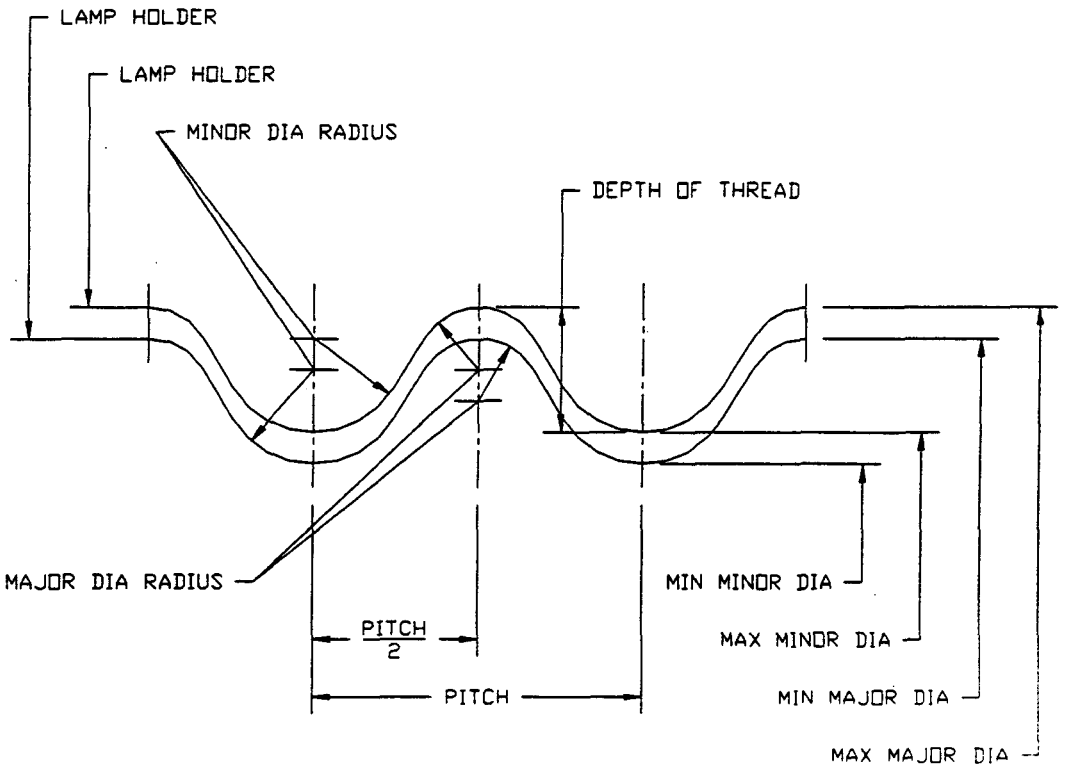

	Dimension (inch)		Nearest Metric Equivalent (millimeters)	
	Min	Max	Min	Max
Major diameter	1.2860	1.2980	32.664	32.969
Minor diameter	1.2500	1.2620	31.750	32.055

Form of Thread

Threads per inch	18
Pitch of thread, *p*	0.0555 inch (1.410mm)
Depth of thread	0.018 inch (0.457mm)
Direction of threads	Right hand
Major diameter radius	0.0094 inch (0.239mm)
Minor diameter radius	0.0143 inch (0.363mm)

Copyright © 1997 by National Electrical Manufacturers Association
1300 North 17th Street, Suite 1847, Rosslyn, VA 22209

First Edition
May 1998

Copyright National Electrical Manufacturers Association
Provided by IHS under license with NEMA
No reproduction or networking permitted without license from IHS
Not for Resale

THIS PAGE INTENTIONALLY

LEFT BLANK

Copyright © 1997 by National Electrical Manufacturers Association
1300 North 17th Street, Suite 1847, Rosslyn, VA 22209

First Edition
May 1998

Copyright National Electrical Manufacturers Association
Provided by IHS under license with NEMA
No reproduction or networking permitted without license from IHS

Not for Resale

ELECTROLIER SIZE METAL SHELL FOR MEDIUM SCREW LAMPHOLDERS

This drawing is intended only to indicate the dimensions to be controlled.

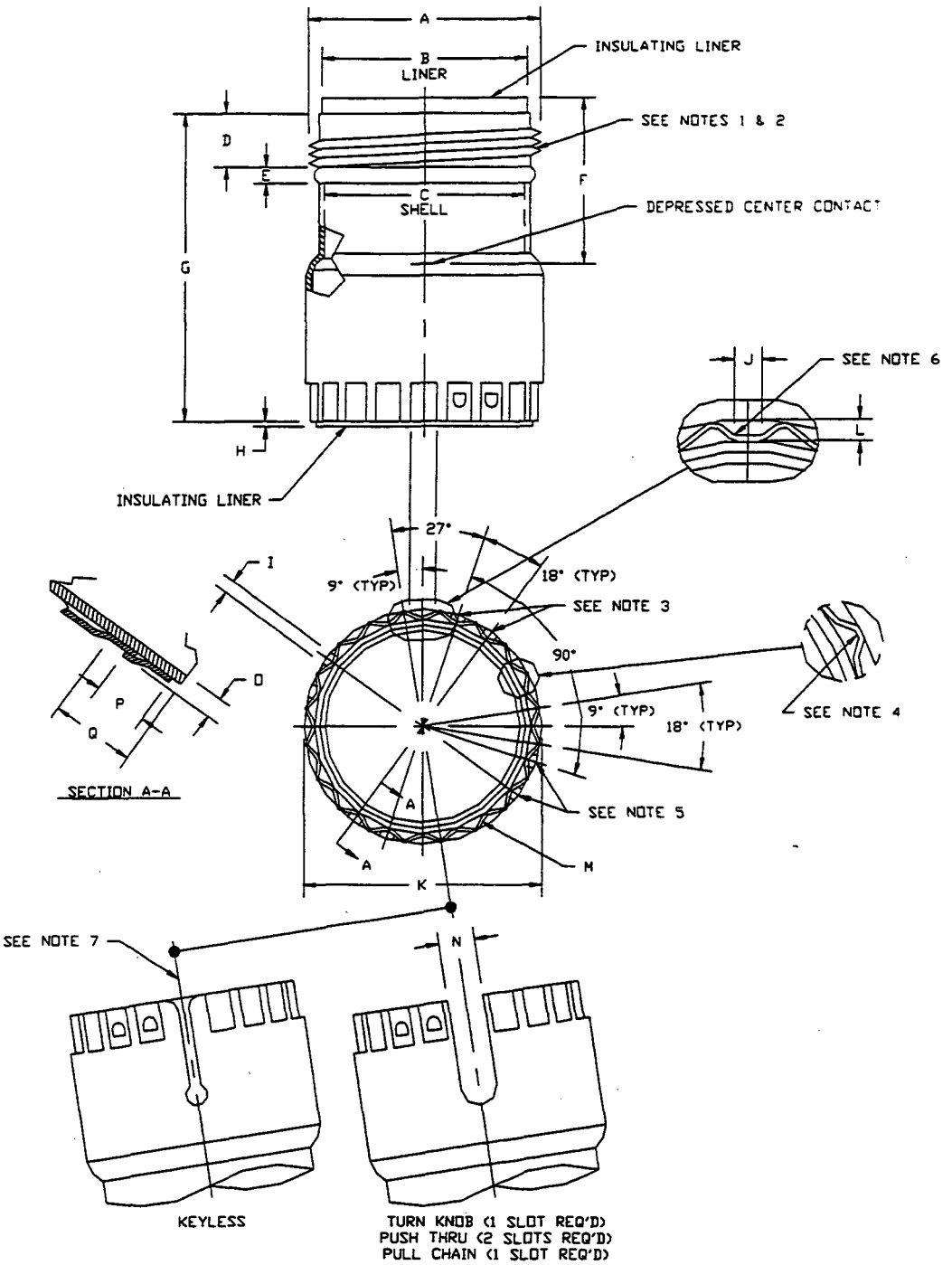

Copyright © 1997 by National Electrical Manufacturers Association
1300 North 17th Street, Suite 1847, Rosslyn, VA 22209

First Edition
May 1998

Copyright National Electrical Manufacturers Association
Provided by IHS under license with NEMA
No reproduction or networking permitted without license from IHS
Not for Resale

Reference	Dimension (inch)		Nearest Metric Equivalent (millimeters)	
	Min	Max	Min	Max
A	1.290	-	32.77	-
B	1.191	1.201	30.25	30.51
C	1.210	1.216	30.73	30.89
D	0.296	0.328	7.52	8.33
E	0.109	0.140	2.77	3.56
F	0.937	1.000	23.80	25.40
G	1.780	1.838	45.21	46.69
H	0.005	0.015	0.00	0.38
I	0.088	0.098	2.24	2.49
J	0.093	0.125	2.36	3.18
K	1.344	1.350	34.14	34.29
L	0.045	0.050	1.14	1.27
M (radius)	0.250	-	6.35	-
N	0.281	0.335	7.14	8.51
O	0.045	0.050	1.14	1.27
P	0.146	0.153	3.71	3.96
Q	0.203	-	5.16	-
R	0.625	0.656	15.88	16.66

NOTES:
1 Standard "UNO" thread 2-1/4 threads minimum. (See Std Sheet 4-2 for dimensions.)
2 Use of "UNO" thread is optional.
3 Two pairs of locking nibs 180E apart.
4 Two anti-rotational nibs if required, same height as O.D.
5 Two additional pairs of nibs optional.
6 Blend radius optional.
7 Slit for shell removal optional.

Copyright © 1997 by National Electrical Manufacturers Association
1300 North 17th Street, Suite 1847, Rosslyn, VA 22209

First Edition
May 1998

Copyright National Electrical Manufacturers Association
Provided by IHS under license with NEMA
No reproduction or networking permitted without license from IHS
Not for Resale

ELECTROLIER SIZE METAL CAP FOR MEDIUM SCREW LAMPHOLDERS

This drawing is intended only to indicate the dimensions to be controlled.

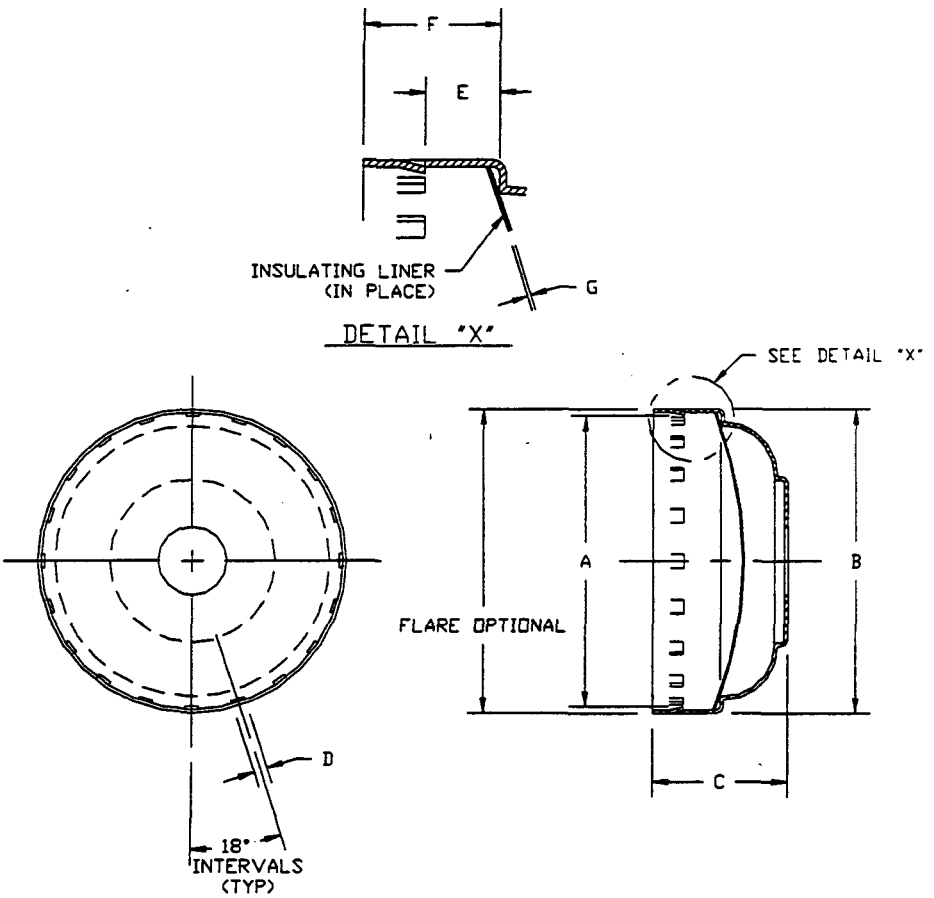

Reference	Dimension (inch)		Nearest Metric Equivalent (millimeters)	
	Min	Max	Min	Max
A	1.292	1.295	32.82	32.89
B	1.352	1.357	34.34	34.47
C	0.600	0.633	15.24	16.08
D	0.073	0.083	1.85	2.11
E	0.171	0.180	4.34	4.57
F	0.297	0.375	7.54	9.53
G	0.012	0.018	0.30	0.46

Copyright © 1997 by National Electrical Manufacturers Association
1300 North 17th Street, Suite 1847, Rosslyn, VA 22209

First Edition
May 1998

Copyright National Electrical Manufacturers Association
Provided by IHS under license with NEMA
No reproduction or networking permitted without license from IHS
Not for Resale

THIS PAGE INTENTIONALLY

LEFT BLANK

Copyright © 1997 by National Electrical Manufacturers Association
1300 North 17th Street, Suite 1847, Rosslyn, VA 22209

First Edition
May 1998

Copyright National Electrical Manufacturers Association
Provided by IHS under license with NEMA
No reproduction or networking permitted without license from IHS

Not for Resale

ANNEX A
(informative)
Former sheet numbers of C81.62 standards

LAMPHOLDERS

Designation	Common Name	Standard Sheet Number	Former Standard Sheet Number	Former ANSI Standard
BA9	Miniature Bayonet	2-10-1	2-1	C81.30-1976
BA/BAY/BAZ15	Candelabra Bayonet	2-20	2-3	C81.30-1976
BY22d	—	2-30-1	2-15	C81.30c-1976
E5	Midget Screw	2-100-1	2-1	C81.10a-1979
E10	Miniature Screw	2-111-1	2-3	C81.10-1976
E11	Mini-Can Screw	2-123-1	2-5	C81.10a-1979
E12	Candelabra Screw	2-131-1	2-7	C81.10c-1983
E17	Intermediate Screw	2-144-1	2-9	C81-10-1976
E26	Single-Contact Medium Screw	2-157-1	2-11	C81.10d-1985
E26d	Double-Contact Medium Screw	2-158-1	2-13	C81.10-1976
E39	Mogul Screw	7005-24A-1	2-185-2	C81.62a-1993
EP39	Position-Oriented Mogul Screw	2-202-1	2-19	C81.10b-1983
Fa8	Single-Pin Fluorescent	2-250-1	2-1	C81.20-1976
G3.9	—	2-300-1	2-15	C81.40b-1983
GU4	—	7005-29A-1	New	—
G5	Miniature Bipin Fluorescent	2-310-1	2-3	C81.20-1976
G5.3	—	2-320-1	2-1	C81.40-1976
GU5.3	—	7005-109-1	New	—
GX5.3	—	2-321-1	2-2	C81.40d-1986
GY5.3	—	2-322-1	2-4	C81.40d-1986
G6.35/GY6.35	—	2-340-1	2-3	C81.40b-1983
GZ6.35	—	2-342-1	New	—
G7.9/GX7.9	—	2-356-1	2-5	C81.40c-1983
G9.5	—	2-368-1	2-7	C81.40c-1983
GY9.5/GZ9.5	—	2-369-1	2-9	C81.40d-1986
G10q	Four-Pin Circular Fluorescent	2-383-1	2-9	C81.20b-1985
2G11	—	7005-82-1	2-393-2	C81.62a-1993
G13	Medium Bipin Fluorescent	2-406-1	2-5	C81.20c-1987
2G13	U-Shaped Fluorescent	2-420-1	2-6	C81.20
GX16d	Mogul End Prong	2-430-1	New	—
G17q/GX17q	Four-Pin Prefocus	2-440-1	2-9	C81.30-1976
G20	Mogul Bipin Fluorescent	2-452-1	2-7	C81.20-1976
G22	Medium Bipost	2-466-1	2-11	C81.40a-1979
G23	—	7005-69-1	2-475-1	C81.62-1991
GX23	—	7005-86-1	2-476-1	C81.20c-1987
G24/GY24	—	7005-78-1	2-493-x*	C81.62-1991
G32/GX32/GY32	—	7005-87-2	2-506-1	C81.62a-1993
G38	Mogul Bipost	2-519-1	2-13	C81.40-1976
PG12 (new)	—	7005-64-2	2-545-1	C81.62c-19xx

Copyright National Electrical Manufacturers Association
Provided by IHS under license with NEMA
No reproduction or networking permitted without license from IHS
Not for Resale

ANSI C81.62g-1996
Supplement to ANSI C81.62-1991

Designation	Common Name	Standard Sheet Number	Former Standard Sheet Number	Former ANSI Standard
P28	Medium Prefocus	2-700-1	2-5	C81.30b-1983
P30	Candelabra Prefocus	2-709-1	2-4	C81.30a-1983
P40	Mogul Prefocus	2-715-1	2-7	C81.30a-1983
R/RX7s	Recessed Single-Contact	2-770-1	2-1	C81.50-1976
R/RX7s	Combined Pair of Lampholders	2-771-x*	New	—
R12.5	—	2-774-x*	—	—
R17d	Recessed Double-Contact Fluorescent	2-777-1	2-11	C81.20a-1984
SX4	Submidget Flanged Fluorescent	2-850-1	2-2	C81.50b-1983
	Fluorescent Lamp Starter Holder	2-900-1	2-15	C81.20-1976

* No standard sheet has been issued for this item. The sheet number is held in reserve.

Copyright National Electrical Manufacturers Association
Provided by IHS under license with NEMA
No reproduction or networking permitted without license from IHS
Not for Resale

ANNEX B
(informative)
Contrast of projections methods on engineering drawings

I. European Method: First angle projection

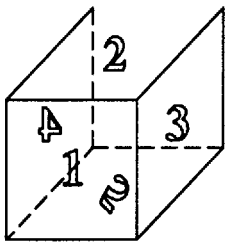

Product

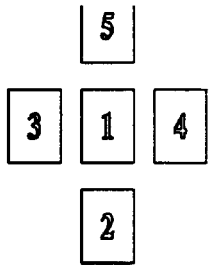

Drawing projections

II. American Method: Third angle projection

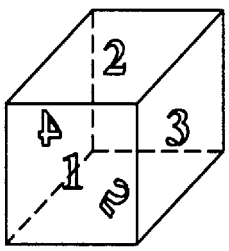

Same Product

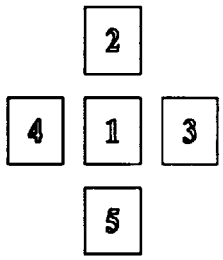

Drawing projections

Copyright National Electrical Manufacturers Association
Provided by IHS under license with NEMA
No reproduction or networking permitted without license from IHS
Not for Resale

Copyright National Electrical Manufacturers Association
Provided by IHS under license with NEMA
No reproduction or networking permitted without license from IHS
Not for Resale