Nationally Acknowledged International Standard

Approved: May 23, 2002 Secretariat: ANSLG -- National Electrical Manufacturers Association

For Electric Lamps-

DISCHARGE LAMPS (EXCLUDING FLUORESCENT LAMPS)– SAFETY SPECIFICATIONS

An American National Standard implies a consensus of those substantially concerned with its scope and provisions. It is intended as a guide to aid the manufacturer, the consumer, and the general public. The existence of an American National Standard does not in any respect preclude anyone, whether he has approved the standard or not, from manufacturing, marketing, purchasing, or using products, processes, or procedures not conforming to the standards. Users are cautioned to obtain the latest editions.
The American National Standards Institute does not develop standards and will in no circumstances give an interpretation of any American National Standard. Moreover, no person shall have the right or authority to issue an interpretation of an American National Standard in the name of the American National Standards Institute.
CAUTION NOTICE: This American National Standard may be revised or withdrawn at any time. The procedures of the American National Standards Institute require that action be taken periodically to reaffirm, revise, or withdraw this standard. Purchasers of American National Standards may receive current information on all standards by calling or writing the American National Standards Institute.

Copyright © 2002 by American National Standard Lighting Group - NEMA

Copyright National Electrical Manufacturers Association
Provided by IHS under license with NEMA
No reproduction or networking permitted without license from IHS Not for Resale

American National Standard

Approval of an American National Standard requires verification by ANSI that the requirements for due process, consensus, and other criteria for approval have been met by the standards developer.

Consensus is established when, in the judgment of the ANSI Board of Standards Review, substantial agreement has been reached by directly and materially affected interests. Substantial agreement means much more than a simple majority, but not necessarily unanimity. Consensus requires that all views and objections be considered, and that a concerted effort be made toward their resolution.

The use of American National Standards is completely voluntary; their existence does not in any respect preclude anyone, whether he has approved the standards or not, from manufacturing, marketing, purchasing, or using products, processes, or procedures not conforming to the standards.

The American National Standards Institute does not develop standards and will in no circumstances give an interpretation of any American National Standard. Moreover, no person shall have the right or authority to issue an interpretation of an American National Standard in the name of the American National Standards Institute. Requests for interpretations should be addressed to the secretariat or sponsor whose name appears on the title page of this standard.

CAUTION NOTICE: This American National Standard may be revised or withdrawn at any time. The procedures of the American National Standards Institute require that action be taken periodically to reaffirm, revise, or withdraw this standard. Purchasers of American National Standards may receive current information on all standards by calling or writing the American National Standards Institute.

Printed and Distributed by

Information Handling Services/Global Engineering Documents
15 Inverness Way East, Englewood, CO 80112-5776
Under Contract with National Electrical Manufacturers Association

Copyright © 2002 by American National Standard Lighting Group
In Affiliation with National Electrical Manufacturers Association
All rights reserved.

No part of this publication may be reproduced in any form, in an electronic retrieval system or otherwise, without prior written permission of the publisher.

Printed in the United States of America

Copyright © 2002 by American National Standard Lighting Group - NEMA

Copyright National Electrical Manufacturers Association
Provided by IHS under license with NEMA
No reproduction or networking permitted without license from IHS

Not for Resale

Foreword (This foreword is not part of ANSI/IEC C78.62035-2002).

Suggestions for improvement of this standard should be submitted to the Secretariat C78, American National Lighting Group of the National Electrical Manufacturers Association, 1300 North 17th Street, Suite 1847, Rosslyn, VA 22209. This standard was processed and approved by Accredited Standards Committee on Electric Lamps, C78, and its Work Group C78-4. Committee approval of the standard does not necessarily imply that all committee members voted for that approval.

In chapter II of this standard, the English text and the order of that text is exactly the same as that found in IEC 62035:1999. The reader should note, however, that the page numbers have been changed and French text is not included. Information concerning the approval of this standard is based on the documents listed in the table below:

Nationally Acknowledged International Standard	CDV	RV
First Edition	78(4)/4009	78(4)4010v2

At the time it approved this standard, the ASC 78 Committee had the following members:

Al Rousseau, Chair, C78
David Mullen, Technical Coordinator
Randolph N. Roy, Secretariat
Ken Denton, Consulting Editor

Organization Represented:	*Name of Representative:*
Advance Transformer Company	Bob Erhardt
Edison Electric Institute	William Maguire (Delegate)
General Electric	Edward Yandek
	Selmar Dorsey (alt)
GE Lighting Systems	Rebecca Lancaster
	Mike Owens (alt)
Holophane Lighting Co.	Michael Tanner
Illuminating Engineering Society	Rita M. Harrold
InterTek Testing Services, Inc.	David Ellis
Magnetek	William Brosius
National Electrical Manufacturers Association	William E. Buckson (Delegate)
	Fred Carpenter (alt Delegate)
OSRAM SYLVANIA INC.	Peter Bleasby
	David Mullen
Philips Lighting Company	Al Rousseau
Underwriters Laboratories, Inc.	David Belt

Copyright © 2002 by American National Standard Lighting Group - NEMA

Copyright National Electrical Manufacturers Association
Provided by IHS under license with NEMA
No reproduction or networking permitted without license from IHS
Not for Resale

At the time of approval of this standard, Subcommittee C78-4 had the following members:

Mike Tanner, Chair, C78-4
Sarah Carleton, Vice-Chair

Organization Represented:	***Name of Representative:***
Advance Transformer	Chacko Oommen
	Bob Erhardt
	Pat Troy
Aromat	Dail Swanson
Cooper Lighting	Kenneth Simms
Day-Brite Lighting	Bill Bush
Edison Electric Institute	William Maguire (Delegate)
Eye Lighting International Inc.	Michael M. Minarczyk
GE Lighting	Selmar Dorsey
GE Lighting Systems	Rebecca Lancaster
	Michael Owens
Genlyte Thomas	Kurt Christensen
Holophane Company	Michael Tanner
Howard Industries, Inc.	Wayne Causey
	Jason Cook
Hubbell Lighting Inc	Isaac L. Flory, IV
Industrias Sola Basic	Emilio Catan G.
	Antonio Salas
INNOVA, Inc	Ahmad Shishegar
InterTek Testing Services, Inc.	David Ellis
Lithonia/Hi-Tek Lighting	Fred Carpenter
Magnetek	Robert Boydston
Manufacturera de Reactores	Ernesto Mendoza E.
	Pablo G. Azcue
OSRAM SYLVANIA INC	Richard Parrott
	Bob Dolan
Philips Lighting Company	Sarah Carleton
Underwriters Laboratories, Inc	David Belt
	John Marshall
Venture Lighting International	Thomas Harding
	Dennis Bradley
Venture Power Systems	Allan Brown

Copyright © 2002 by American National Standard Lighting Group - NEMA

Copyright National Electrical Manufacturers Association
Provided by IHS under license with NEMA
No reproduction or networking permitted without license from IHS
Not for Resale

Table of Contents

Page

Foreword iii

Chapter I

1 Additions to Normative references I-3
2 Deviations to clause 5.1.1 ..... I-3
3 Deviations to Annex B I-3
4 Deviations to Annex E I-3
5 Deviations to Annex F I-3

Chapter II

Clause
1 Scope II-3
2 Normative references II-3
3 Definitions II-4
4 General safety requirements II-5
4.1 General II-5
4.2 Marking II-6
4.3 Mechanical requirements II-6
4.4 Electrical requirements II-8
4.5 Thermal requirements II-9
5 Particular safety requirements II-10
5.1 High-pressure sodium vapour lamps II-10
5.2 Metal halide lamps II-10
6 Information for luminaire design II-10

Annex A (normative) List of lamp caps and gauges II-11
Annex B (normative) Pull and torsion test values II-12
Annex C (normative) Torsion test holders II-13
Annex D (normative) Information for thermal tests II-15
Annex E (normative) Measurement of pulse height for lamps with internal starting device II-16
Annex F (informative) Information for luminaire design II-19

Copyright © 2002 by American National Standard Lighting Group - NEMA

Copyright National Electrical Manufacturers Association
Provided by IHS under license with NEMA
No reproduction or networking permitted without license from IHS
Not for Resale

This Page
Intentionally
Left Blank

Copyright © 2002 by American National Standard Lighting Group - NEMA

Copyright National Electrical Manufacturers Association
Provided by IHS under license with NEMA
No reproduction or networking permitted without license from IHS
Not for Resale

CHAPTER I

United States of America's

Deviations to

IEC 62035:1999 – 10

Copyright © 2002 by American National Standard Lighting Group - NEMA

Copyright National Electrical Manufacturers Association
Provided by IHS under license with NEMA
No reproduction or networking permitted without license from IHS

Not for Resale

This Page
Intentionally
Left Blank

Copyright © 2002 by American National Standard Lighting Group - NEMA

Copyright National Electrical Manufacturers Association
Provided by IHS under license with NEMA
No reproduction or networking permitted without license from IHS

Not for Resale

1 Additions to Normative references

Add the following standards to Clause 2, Normative references:

ANSI C81.61-1990 (R1996) Electrical lamp bases
ANSI C81.62-1990 (R1996) Lampholders for electrical lamps
ANSI C81.63-1991 (R1996) Gauges for electric lamp bases and lampholders
ANSI C78.40-1992 Specifications for mercury lamps
ANSI C78.41- 2001 Guidelines for low pressure sodium lamps
ANSI C78.42-2001 High pressure sodium lamps
ANSI C82.4-1992 Ballasts for high intensity discharge and low pressure sodium lamps
UL 1029-1994 High intensity discharge ballasts
UL 1598-2000 Luminaires

Alternate standards can be substituted for the corresponding IEC standard as listed here.

IEC 60061-1	ANSI C81.61
IEC 60061-2	ANSI C81.62
IEC 60061-3	ANSI C81.63
IEC 60188	ANSI C78.42
IEC 60192	ANSI C78.40
IEC 60598-1	UL 1598
IEC 60662	ANSI C78.41
IEC 60922	UL 1029
IEC 60923	ANSI C82.4
IEC 61167	ANSI C78.1340 to 1342 and ANSI C78.1372 to 1390 series metal halide lamps

2 Deviations to clause 5.1.1

Clause 5.1.1 does not apply.

3 Deviations to Annex B

In Annex B, Table B.2, the heating temperature for E26 and E39 bases shall be identical to, or greater than, the maximum base temperature given in the ANSI lamp designation code for each lamp type.

4 Deviations to Annex E

Annex E does not apply.

5 Deviations to Annex F

Part a of clause F.6 does not apply.

Copyright © 2002 by American National Standard Lighting Group - NEMA

Copyright National Electrical Manufacturers Association
Provided by IHS under license with NEMA
No reproduction or networking permitted without license from IHS
Not for Resale

This Page
Intentionally
Left Blank

Copyright © 2002 by American National Standard Lighting Group - NEMA

Copyright National Electrical Manufacturers Association
Provided by IHS under license with NEMA
No reproduction or networking permitted without license from IHS

Not for Resale

CHAPTER II

IEC 62035:1999 – 10

DISCHARGE LAMPS (EXCLUDING FLUORESCENT LAMPS) – SAFETY SPECIFICATIONS

Copyright © 2002 by American National Standard Lighting Group - NEMA

Copyright National Electrical Manufacturers Association
Provided by IHS under license with NEMA
No reproduction or networking permitted without license from IHS

Not for Resale

This Page
Intentionally
Left Blank

Copyright © 2002 by American National Standard Lighting Group - NEMA

Copyright National Electrical Manufacturers Association
Provided by IHS under license with NEMA
No reproduction or networking permitted without license from IHS

Not for Resale

DISCHARGE LAMPS (EXCLUDING FLUORESCENT LAMPS) – SAFETY SPECIFICATIONS

1 Scope

This International Standard specifies the safety requirements for discharge lamps (excluding fluorescent lamps) for general lighting purposes.

This International Standard is applicable to low-pressure sodium vapour lamps and to high-intensity discharge (HID) lamps, i.e. high-pressure mercury vapour lamps (including blended lamps), high-pressure sodium vapour lamps and metal halide lamps. It applies to single- and double-capped lamps, having caps as listed in annex A.

The requirements of this standard relate only to type testing. Conditions of compliance, including methods of statistical assessment, are under consideration.

NOTE This standard only concerns safety criteria and does not take into account performance. The performance standards IEC 60188, IEC 60192, IEC 60662, IEC 61167 and IEC 61549 should be referred to for such characteristics.

It may be expected that lamps which comply with this standard will operate safely at supply voltages between 90 % and 110 % of rated supply voltage and when operated with a ballast complying with IEC 60922 and IEC 60923, with a starting device complying with IEC 60926 and IEC 60927, and in a luminaire complying with IEC 60598-1.

2 Normative references

The following normative documents contain provisions which, through reference in this text, constitute provisions of this International Standard. For dated references, subsequent amendments to, or revisions of, these publications do not apply. However, parties to agreements based on this International Standard are encouraged to investigate the possibility of applying the most recent editions of the normative documents indicated below. For undated references, the latest edition of the normative document referred to applies. Members of IEC and ISO maintain registers of currently valid International Standards.

IEC 60050(845), *International Electrotechnical Vocabulary (IEV) – Chapter 845: Lighting*

IEC 60061-1, *Lamp caps and holders together with gauges for the control of interchangeability and safety – Part 1: Lamp caps*

IEC 60061-2, *Lamp caps and holders together with gauges for the control of interchangeability and safety – Part 2: Lampholders*

IEC 60061-3, *Lamp caps and holders together with gauges for the control of interchangeability and safety – Part 3: Gauges*

IEC 60061-4, *Lamp caps and holders together with gauges for the control of interchangeability and safety – Part 4: Guidelines and general information*

IEC 60155, *Glow-starters for fluorescent lamps*

Copyright National Electrical Manufacturers Association
Provided by IHS under license with NEMA
No reproduction or networking permitted without license from IHS Not for Resale

IEC 60598-1, *Luminaires – Part 1: General requirements and tests*

IEC 60662, *High-pressure sodium vapour lamps*

IEC 60695-2-1/0, *Fire hazard testing – Part 2: Test methods – Section 1/Sheet 0: Glow-wire test methods – General*

IEC 60922, *Auxiliaries for lamps – Ballasts for discharge lamps (excluding tubular fluorescent lamps) – General and safety requirements*

IEC 60923, *Auxiliaries for lamps – Ballasts for discharge lamps (excluding tubular fluorescent lamps) – Performance requirements*

IEC 60926, *Auxiliaries for lamps – Starting devices (other than glow starters) – General and safety requirements*

IEC 60927, *Auxiliaries for lamps – Starting devices (other than glow starters) – Performance requirements*

IEC 61167, *Metal halide lamps*

ISO 4046, *Paper, board, pulp and related terms – Vocabulary*

3 Definitions

For the purposes of this International Standard, the following terms and definitions apply, as well as others given in IEC 60050(845).

3.1
high-intensity discharge lamp; HID lamp
electric discharge lamp in which the light-producing arc is stabilized by wall temperature and the arc has a bulb wall loading in excess of 3 watts per square centimetre

NOTE HID lamps include groups of lamps known as high-pressure mercury, metal halide and high-pressure sodium lamps.

[IEV 845-07-19]

3.2
high-pressure mercury (vapour) lamp
high-intensity discharge lamp in which the major portion of the light is produced, directly or indirectly, by radiation from mercury operating at a partial pressure in excess of 100 kilopascals

NOTE This term covers clear, phosphor coated (mercury fluorescent) and blended lamps. In a fluorescent mercury discharge lamp, the light is produced partly by the mercury vapour and partly by the layer of phosphors excited by the ultraviolet radiation of the discharge.

[IEV 845-07-20]

3.3
blended lamp; self-ballasted mercury lamp (USA)
lamp containing in the same bulb certain elements of a mercury vapour lamp and an incandescent lamp filament connected in series

NOTE The bulb may be diffusing or coated with phosphors.

[IEV 845-07-21, modified]

Copyright National Electrical Manufacturers Association
Provided by IHS under license with NEMA
No reproduction or networking permitted without license from IHS Not for Resale

3.4
high-pressure sodium (vapour) lamp
high-intensity discharge lamp in which the light is produced mainly by radiation from sodium vapour operating at a partial pressure of the order of 10 kilopascals

NOTE The term covers lamps with clear or diffusing bulb.

[IEV 845-07-23]

3.5
low-pressure sodium (vapour) lamp
discharge lamp in which the light is produced by radiation from sodium vapour operating at a partial pressure of 0,1 to 1,5 pascal

[IEV 845-07-24]

3.6
metal halide lamp
high-intensity discharge lamp in which the major portion of the light is produced by radiation from a mixture of metallic vapour, metal halides and the products of the dissociation of metal halides

NOTE The definition covers clear and coated lamps.

[IEV 845-07-25, modified]

3.7
nominal wattage
approximate quantity value of lamp wattage used to designate or identify a lamp

3.8
specific effective radiant UV power
effective power of the UV radiation of a lamp related to its luminous flux (unit: mW/klm)

NOTE The effective power of the UV radiation is obtained by weighting the spectral power distribution of the lamp with the action spectrum published by the American Conference of Governmental Industrial Hygienists (ACGIH), which is endorsed by the World Health Organization (WHO) and recommended by the International Radiation Protection Association (IRPA).

3.9
type test
test or series of tests made on a type test sample for the purpose of checking compliance of the design of a given product with the requirements of the relevant standard

3.10
type test sample
sample consisting of one or more similar units submitted by the manufacturer or responsible vendor for the purpose of the type test

4 General safety requirements

4.1 General

Lamps shall be so designed and constructed that in normal use they present no danger to the user or the surroundings.

In general, compliance is checked by carrying out all the tests specified in this standard.

Copyright National Electrical Manufacturers Association
Provided by IHS under license with NEMA
No reproduction or networking permitted without license from IHS Not for Resale

4.2 Marking

4.2.1 Lamp marking

Lamps shall be marked as follows:

– mark of origin, which may take the form of a trade mark, the manufacturer's name or the name of the responsible vendor;

– nominal wattage (marked "W" or "watts") and/or any other indication which identifies the lamp.

NOTE 1 In the relevant lamp performance standards, the nominal wattage may still be indicated as "rated" wattage (and the rated wattage as "objective" wattage). This wording will be corrected in future editions of these standards.

NOTE 2 In the USA, additional product marking is required.

Marking shall be legible and durable.

Compliance is checked on unused lamps as follows:

a) presence and legibility by visual inspection;

b) durability by rubbing the area of the marking by hand for a period of 15 s, with a smooth cloth dampened with water. After this test the marking shall still be legible.

4.2.2 Additional information to be provided

In addition to the above lamp marking, all details and provisions which are necessary to ensure safe installation and use shall be given in the lamp manufacturer’s instructions. If applicable, information shall be given about

a) the risk of a lamp shattering;

b) the hazard associated with a high level of UV radiation emitted by the lamp;

c) the risk of the occurrence of a rectifying effect at the end of lamp life;

d) the hazard(s) that exist(s) when the outer envelope is broken.

Compliance is checked by visual inspection.

4.3 Mechanical requirements

4.3.1 Requirements for caps

4.3.1.1 Dimensions

If lamps use standardized caps, they shall be in accordance with the requirements on the cap data sheets of IEC 60061-1 listed in annex A. Non-standardized caps shall be in line with the lamp manufacturer’s documentation.

Compliance is checked by gauging and/or measurement. For standardized caps, the gauges of IEC 60061-3 listed in annex A shall be used.

4.3.1.2 Creepage distance

The minimum creepage distance between contact pin(s) or contacts and a touchable metal shell of the cap shall be in accordance with the requirements of IEC 60061-4.

Compliance is checked by measurement.

Copyright National Electrical Manufacturers Association
Provided by IHS under license with NEMA
No reproduction or networking permitted without license from IHS Not for Resale

4.3.1.3 Caps provided with keys

For lamps using cap types incorporating keys which ensure non-interchangeability with similar lamp types, the correct cap/key version shall be used.

Compliance is checked by visual inspection.

4.3.2 Construction and assembly

Caps shall be so constructed and assembled to the bulbs that the whole assembly remains intact and attached during and after normal operation.

Compliance is checked by carrying out the following tests.

4.3.2.1 Resistance to pull

Where lamps are so constructed that when withdrawing from the lampholder a pull is exerted, the pull shall be withstood without the cap or any part of the cap or bulb being loosened or pulled apart.

Compliance is checked by the following pull test.

A pull in the direction of the lamp axis shall be applied for 1 min to

a) unused lamps,

b) lamps after storage in a heating cabinet for a period of 2 000 h ± 50 h.

The pull values and heating cabinet temperatures are given in annex B.

Care shall be taken that the means (clamp, etc.) of applying the pull to the lamp does not weaken the structure.

The pull shall be increased progressively from zero to the value given in annex B, table B.1. The pull shall not be applied with a jerk.

4.3.2.2 Resistance to torque

Where lamps are so constructed that, during insertion into or withdrawal from, the lampholder, a torque is applied to the cap or parts of the cap or to the cap/bulb connection, the torque shall be withstood without any loosening of the connections. For mechanically fixed screw caps, an angular displacement between cap and bulb of not more than 10° is allowed.

Compliance is checked by the following torsion test:

A torque shall be applied to

a) unused lamps,

b) lamps after storage in a heating cabinet for a period of 2 000 h ± 50 h.

The torque values and the heating cabinet temperatures are given in annex B. The torsion test holders are specified in annex C.

Copyright National Electrical Manufacturers Association
Provided by IHS under license with NEMA
No reproduction or networking permitted without license from IHS Not for Resale

Before each use, the test holder for screw caps shall be checked to ensure that it is clean and completely free of lubricants and grease. The cap of the test lamp shall be placed in the appropriate holder. Either the cap or the bulb may be mechanically clamped.

NOTE For some mechanically fixed screw caps, for example those positioned on a screw thread shaped sealing area, it is necessary to clamp the shell and to apply the torque in both directions.

The torque shall be increased progressively from zero to the value given in annex B, table B.2. The torque shall not be applied with a jerk.

4.4 Electrical requirements

4.4.1 Parts which can become accidentally live

Metal parts intended to be insulated from live parts shall not be or become live. Any movable conductive material shall be placed, without the use of a tool, in the most onerous position before inspection.

On bayonet caps, any projection from the contact plate shall not come within 1 mm of metal parts intended to be insulated**.**

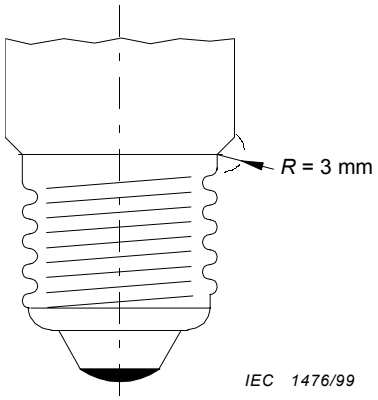

Figure 1 – Edison screw-capped lamp

On Edison screw caps any projection from the cap shell shall not project more than 3 mm from the surface of the cap (see figure 1)**.**

Compliance is checked by either an appropriate automatic system or by visual inspection. In addition, there shall be regular daily checks of the equipment or a verification of the effectiveness of the inspection.

4.4.2 Insulation resistance

Lamps where the metal shell of the cap can be touched after insertion into the holder shall have an insulation resistance between the metal shell of the cap and the pin(s) or contacts of not less than 2 MΩ.

Compliance is checked by measurement with suitable test equipment using a d.c. voltage of 500 V.

4.4.3 Electric strength

The insulation between the same parts as those referred to in 4.4.2 shall have sufficient (di)electric strength.

Copyright National Electrical Manufacturers Association
Provided by IHS under license with NEMA
No reproduction or networking permitted without license from IHS Not for Resale

Compliance is checked with a 1 500 V a.c. voltage of substantially sine-wave form, with a frequency of 50 Hz or 60 Hz and applied for 1 min. Initially, not more than half the prescribed voltage shall be applied. The voltage shall then be raised rapidly to the full value.

No flash-over or breakdown shall occur during the test. Glow discharges without a drop in voltage are neglected.

4.5 Thermal requirements

Insulating material of caps, which provide protection against electric shock, shall be resistant to heat and fire.

Compliance is checked by the following tests.

These tests are not made on parts of ceramic material.

4.5.1 Resistance to heat

4.5.1.1 Heat test

The sample is tested for a period of 168 h in a heating cabinet at a temperature according to the values given in annex D.

At the end of the test, the specimens shall not have undergone any change impairing their future safety, especially in the following respects:

– reduction in the protection against electric shock as required under insulation resistance and electric strength;

– loosening of any part of the cap, cracks, swelling and shrinking as determined by visual inspection.

At the end of the test, the dimensions shall comply with the dimensional requirements for caps.

4.5.1.2 Ball-pressure test

The sample is subjected to a ball-pressure test using the apparatus shown in annex D.

The specimens are conditioned for 1 h in the same heating cabinet where the test will be made, at a temperature according to the values given in annex D.

The surface of the part under test is placed in the horizontal position. A steel ball of 5 mm diameter is pressed against this surface by a force of 20 N. If the surface under test bends, the part where the ball presses shall be supported. If the test cannot be made on the complete specimen, a suitable section may be cut from it and used as a test specimen. The specimen shall be at least 2,5 mm thick, but if such a thickness is not available on the specimen then two or more pieces are placed together.

The test is made in a heating cabinet at a temperature according to values given in annex D. After 1 h, the ball shall be removed from the specimen, which is then immersed within 10 s in cold water for cooling down to approximately room temperature. The diameter of the impression caused by the ball is measured and shall not exceed 2 mm.

NOTE In the case of curved surfaces, the shorter axis is measured if the indent is elliptical.

In case of doubt, the depth p of the impression is measured and the diameter Ø calculated using the formula: $Ø = 2\sqrt{p(5-p)}$.

Copyright National Electrical Manufacturers Association
Provided by IHS under license with NEMA
No reproduction or networking permitted without license from IHS Not for Resale

4.5.2 Resistance to abnormal heat and fire

4.5.2.1 Glow-wire test

The sample is subjected to a test using a nickel-chromium glow-wire heated to 650 °C. The test apparatus shall be that described in IEC 60695-2-1/0.

The glow-wire temperature and heating current shall be constant for 1 min prior to commencing the test. Care shall be taken to ensure that heat radiation does not influence the specimen during this period. The glow-wire tip temperature is measured by means of a sheathed fine-wire thermocouple constructed and calibrated as described in IEC 60695-2-1/0.

The specimen to be tested is mounted vertically on the carriage and pressed against the glow-wire tip with a force of 1 N, preferably 15 mm or more from the upper edge of the specimen. The penetration of the glow-wire into the specimen is mechanically limited to 7 mm. After 30 s the specimen is withdrawn from contact with the glow-wire tip.

Any flame or glowing of the specimen shall extinguish within 30 s of withdrawing the glow-wire and any burning or molten drop shall not ignite a piece of five-layer tissue paper, specified in 6.86 of ISO 4046, spread out horizontally 200 mm ± 5 mm below the specimen.

NOTE Precautions should be taken to safeguard the health of personnel conducting tests against risk of explosion or fire, of inhalation of smoke and/or toxic products, and of toxic residues.

5 Particular safety requirements

5.1 High-pressure sodium vapour lamps

5.1.1 Pulse height for lamps with internal starting device

For lamps with an internal starting device, the voltage pulses generated during ignition shall not exceed the maximum pulse height as given in the information for ballast design specified on the relevant lamp data sheet in IEC 60662.

Compliance is checked by the measurement procedure described in annex E.

5.2 Metal halide lamps

5.2.1 UV radiation

For lamps standardized in IEC 61167, the specific effective radiant UV power emitted by the lamp shall not exceed the maximum value specified on the relevant lamp data sheet.

Compliance is checked by spectroradiometric measurement, under the same conditions as for the lamp's electrical and photometric characteristics as given in IEC 61167.

6 Information for luminaire design

Refer to annex F for information for luminaire design.

Copyright National Electrical Manufacturers Association
Provided by IHS under license with NEMA
No reproduction or networking permitted without license from IHS
Not for Resale

Annex A
(normative)

List of lamp caps and gauges

Table A.1 – Data sheet references of IEC 60061

Cap type	Cap data sheet number in IEC 60061-1	Gauge data sheet number in IEC 60061-3
B22d	7004-10	7006-4A, 4B, 10, 11
B22d-3	7004-10A	7006-19
BY22d	7004-17	7006-4A, 17A
E26	7004-21A	7006-27D, 27E, 29L
E26/50x39	Under consideration	7006-27D, 27E, 29L
E27	7004-21	7006-27B, 27C, 28A, 50, 51A
E27/51x39	7004-27	7006-27B, 27C, 28A, 50, 51
E39	7004-24A	7006-24A, 24B, 24C
E40	7004-24	7006-27, 28D, 52, 53
Fc2	7004-114	7006-114
G12	7004-63	7006-80
PG12	7004-64	7006-81
RX7s	7004-92A	Under consideration

NOTE 1 There are two variations of E26 caps which are not fully compatible, i.e. E26/24 caps used in North America and E26/25 caps used in Japan.

NOTE 2 The list is not exhaustive.

Copyright National Electrical Manufacturers Association
Provided by IHS under license with NEMA
No reproduction or networking permitted without license from IHS
Not for Resale

Annex B
(normative)

Pull and torsion test values

Table B.1 – Pull test values

Cap type	Unused lamps	Lamps after 2 000 h heating	
	Pull value N	Temperature °C	Pull value N
G12	Under consideration	Under consideration	Under consideration
PG12	Under consideration	Under consideration	Under consideration

Table B.2 – Torsion test values

Cap type	Unused lamps	Lamps after 2 000 h heating	
	Torque value Nm	Temperature °C	Torque value Nm
B22d and B22d-3	3,0	210	Under consideration
BY22d	3,0	150	Under consideration
E26 and E26/50x39	3,0	165 J * **	2,5
E27 and E27/51x39	3,0	210	2,5
E39	5,0	230 J * **	Under consideration
E40	5,0	250 ***	Under consideration

* J = Japanese practice.

** In North America, the temperature shall be identical to the maximum cap temperature given in the ANSI lamp designation code for each lamp type.

*** For high-pressure sodium vapour lamps, 150 W and lower: 210 °C.

Copyright National Electrical Manufacturers Association
Provided by IHS under license with NEMA
No reproduction or networking permitted without license from IHS
Not for Resale

Annex C
(normative)

Torsion test holders

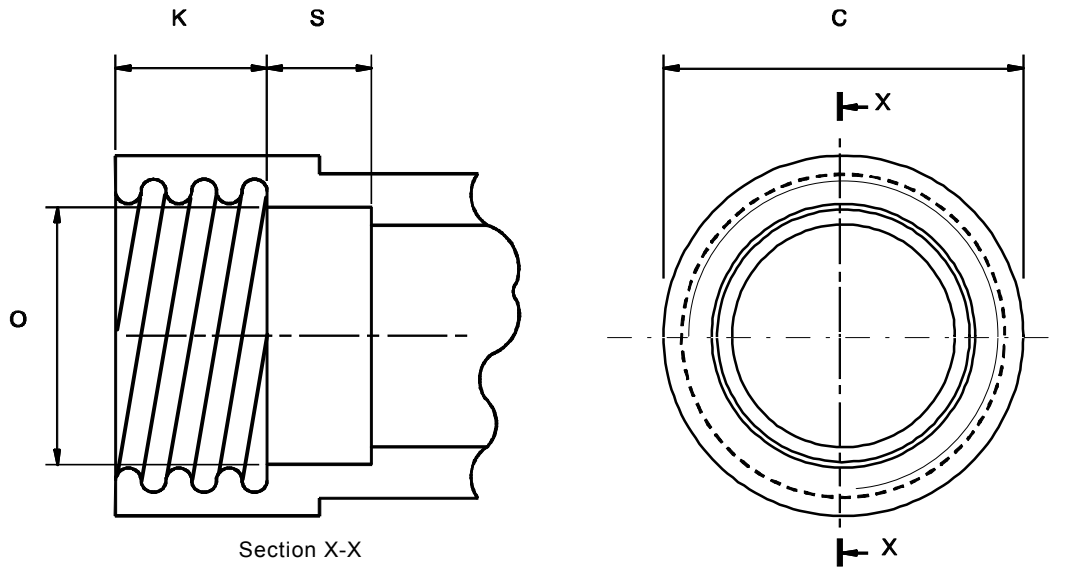

Section X-X

Threads to be in accordance with holder threads of IEC 60061-2

IEC 1477/99

Dimension	E26	E27	E39	E40	Tolerance
	mm	mm	mm	mm	mm
C	32,0	32,0	47,0	47,0	Min.
K	11,0	13,5	19,0	19,0	+0/–0,3
O	23,0	23,0	34,0	34,0	±0,1
S	12,0	12,0	13,0	13,0	Min.

Figure C.1 – Holder for torsion test on lamps with Edison screw caps

Copyright National Electrical Manufacturers Association
Provided by IHS under license with NEMA
No reproduction or networking permitted without license from IHS
Not for Resale

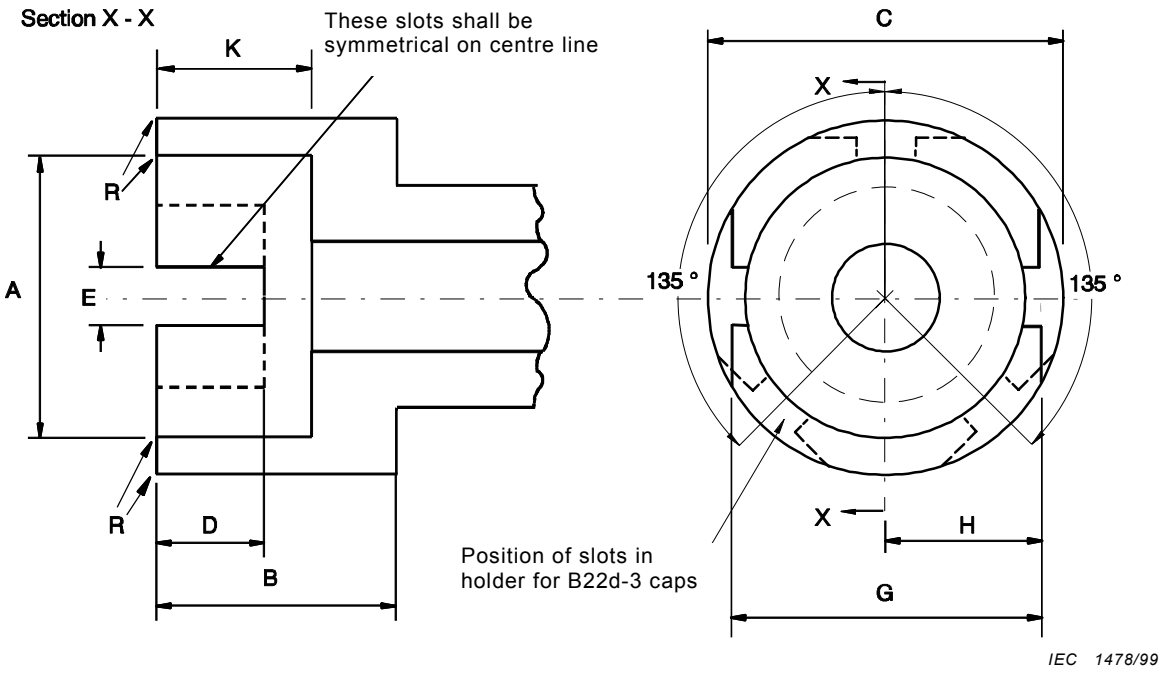

Dimension	B22d and BY22d mm	Tolerance mm
A	22,27	+0,03
B	19,0	Min.
C	28,0	Min.
D	9,5	Min.
E	3,0	+0,17
G	24,6	±0,3
H	12,15	Min.
K	12,7	±0,3
R	1,5	Approximate

Figure C.2 – Holder for torsion test on lamps with bayonet caps

Copyright National Electrical Manufacturers Association
Provided by IHS under license with NEMA
No reproduction or networking permitted without license from IHS
Not for Resale

Annex D
(normative)

Information for thermal tests

Table D.1 – Temperatures

Cap type	Temperature °C
BY22d	Under consideration
G12	Under consideration
PG12	Under consideration

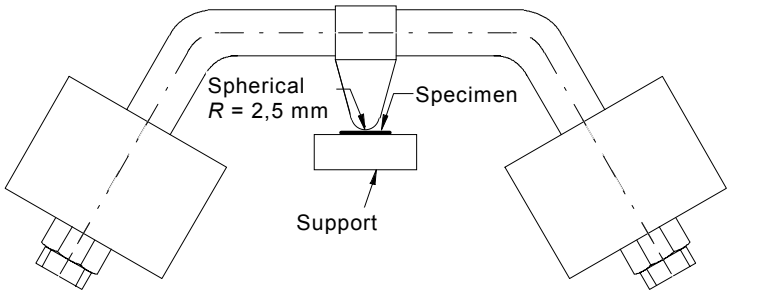

Figure D.1 – Ball-pressure test apparatus

--```-`-`,,`,,`,`,,`---
Copyright National Electrical Manufacturers Association
Provided by IHS under license with NEMA
No reproduction or networking permitted without license from IHS
Not for Resale

Annex E
(normative)

Measurement of pulse height for lamps with internal starting device

E.1 Introduction

High-pressure sodium vapour lamps with an internal starting device unit, being either a glow switch or a thermal switch, generate voltage pulses during ignition. This annex describes the method for measuring the height of these pulses. Since the magnitude of the pulses generated by an internal starting device unit is dependent upon the ballast employed, its characteristics shall be specified.

E.2 Test circuit

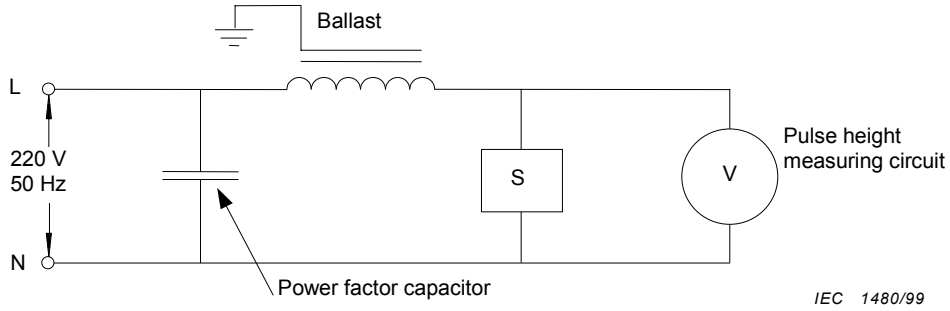

Figure E.1 – Test circuit

Voltage pulses shall be measured using the circuit in figure E.1.

In this circuit

– for lamps with internal glow switch, S is a starting device unit of the type used in the lamp (see note under E.3.1);
– for lamps with internal thermal switch, S is the lamp itself;
– the ballast shall have characteristics as described in E.2.1;
– the power factor capacitor shall have a value as given in E.2.2;
– the pulse height measuring circuit shall be as specified in E.2.3;
– the cable capacitance between the ballast and lamp or starting device shall not exceed 20 pF.

Copyright National Electrical Manufacturers Association
Provided by IHS under license with NEMA
No reproduction or networking permitted without license from IHS
Not for Resale

E.2.1 Ballast characteristics

Measurement of the pulse height shall be carried out using a ballast complying with the requirements of IEC 60923 and having resonance characteristics as given in table E.1

The resonance characteristics are determined by applying a voltage of the order of 20 V across the ballast and measuring the current at various frequencies. During these measurements any provision for earthing the ballast shall be connected to the terminal designated as the line terminal. Ballast resonance characteristics may be adjusted by the use of suitable capacitors.

Table E.1 – Test ballast resonance characteristics

Lamp	50 W HV	70 W HV	150 W	250 W	400 W
Resonance frequency (kHz) ± 10%	u.c.*	18	30	40	35
Impedance at resonance frequency (kΩ) ± 10%	u.c.*	120	40	30	20
* u.c. = under consideration NOTE These resonance characteristics are representative of those 230 V reactor ballasts which are commercially available leading to the highest value of pulse voltage.					

E.2.2 Power factor capacitor

The power factor capacitor to be used shall have a value as given in table E.2.

Table E.2 – Power factor capacitor values for tests

Lamp	50 W HV	70 W HV	150 W	250 W	400 W
Capacitance (μF) ± 10%	u.c.*	10	20	30	40
* u.c. = under consideration					

E.2.3 Pulse height measuring circuit

– For lamps with internal glow switch, the measuring circuit is that described in IEC 60155.

– For lamps with internal thermal switch, the measuring circuit is that described in IEC 60926.

NOTE It is recognized that the above measuring circuits will not accurately detect very narrow high-voltage pulses. Experience has shown that such pulses do not cause practical problems.

E.3 Tests

E.3.1 Lamps with an internal glow switch

Measurement shall be taken using the test circuit of E.2. The relevant pulse height value is the highest voltage recorded on either of the two voltmeters of the measuring circuit, referred to in E.2.3, during a period of 30 s. The test is sufficient for both cold start and hot restrike conditions.

NOTE In lamps with internal glow switch, pulse voltages are limited by the starting device unit itself. Therefore, for the purpose of this test, starting device units of the type used in the lamps should be taken and not the complete lamps. Such separate starting device units should be provided by the lamp manufacturer. If, however, the working conditions were to change when testing the starting device unit separately from the lamp, the complete lamps should be tested.

Copyright National Electrical Manufacturers Association
Provided by IHS under license with NEMA
No reproduction or networking permitted without license from IHS Not for Resale

E.3.2 Lamps with an internal thermal switch

Tests shall be carried out on complete lamps, which have to be conditioned before testing. The pulse height shall be measured for both the cold start and hot restrike conditions.

NOTE Complete lamps should be tested, because in lamps with an internal thermal switch the pulse voltage limitation is effected by a combination of starting device unit design and arc tube characteristics.

a) Cold start condition

For initial conditioning, the lamps shall be operated for at least 2 h prior to any test, then switched off and remain unlit for at least 1 h.

After initial conditioning, the lamps shall be ignited and allowed to run for 5 s to 10 s, switched off and remain unlit for at least a further 15 min.

A measurement shall then be taken using the test circuit of E.2. The relevant pulse height value is the highest voltage recorded on either of the two voltmeters of the measuring circuit, referred to in E.2.3, up to 5 s after the lamp strikes.

Further measurement may be taken on the same lamp without a repeat of the initial conditioning, provided the lamp is run for only 5 s to 10 s and remains unlit for a minimum of 15 min.

b) Hot restrike condition

The lamps shall be operated for at least 15 min. The supply shall then be interrupted to extinguish the lamp and then be restored.

A measurement shall be taken using the test circuit of E.2. The relevant pulse height value is the highest voltage recorded on either of the two voltmeters of the measuring circuit, referred to in E.2.3, up to 5 s after the lamp restrikes.

A repeat measurement may be taken after a further 15 min operation.

--`,,`-`-`,,`,,`,`,,`---

Copyright National Electrical Manufacturers Association
Provided by IHS under license with NEMA
No reproduction or networking permitted without license from IHS Not for Resale

Annex F
(informative)

Information for luminaire design

F.1 Guidelines for safe lamp operation

To ensure safe lamp operation, it is essential to observe the following recommendations.

F.2 Maximum lamp cap temperature

The luminaire designer should ensure that under normal operating conditions the cap temperature of the lamp does not exceed the maximum cap temperature value shown in table F.1.

The method of measurement for bayonet and Edison screw caps is described in annex K of IEC 60432-1.

Table F.1 – Maximum lamp cap temperatures

Cap type	Maximum cap temperature °C
B22d and B22d-3	210
BY22d	150
E26 and E26/50x39	165 J * **
E27 and E27/51x39	210
E39	230 J * **
E40	250 ***
Fc2	Under consideration
G12	Under consideration
PG12	Under consideration
RX7s	Under consideration

* J = Japanese practice

** In North America the maximum cap temperature for each lamp type is given in the ANSI lamp designation code.

*** For high-pressure sodium vapour lamps, 150 W and lower: 210 °C

F.3 Cap/holder – Key configuration

The luminaire designer should ensure that, if applicable, a holder with the correct key version for the intended lamp/ballast combination is installed in the luminaire.

--`,,`-`-`,,`,,`,`,,`---
Copyright National Electrical Manufacturers Association
Provided by IHS under license with NEMA
No reproduction or networking permitted without license from IHS
Not for Resale

F.4 Protection against lamp shattering

For many types of metal halide lamps, there is a risk of the lamp shattering. In instances where lamp manufacturers warn against the possibility of lamps shattering, or as referenced on the relevant lamp data sheets in IEC 61167, adequate protective shielding measures should be taken in the luminaire to protect against this hazard.

F.5 Protection against UV radiation

Some types of metal halide lamps emit a high level of UV radiation. In instances where lamp manufacturers warn against the risk of UV radiation, or as referenced on the relevant lamp data sheets in IEC 61167, adequate protective UV absorption measures should be taken in the luminaire to protect against this hazard.

F.6 Possible condition at end of lamp life

a) For high-pressure sodium vapour lamps there is a risk that at the end of lamp life a number of lamps may exhibit a rectifying effect. This can lead to overloading of the lamp control gear (ballast, transformer and/or starting device). Adequate protective measures should be taken to ensure that safety is maintained under this condition.

b) For some types of metal halide lamps, there is a risk that at the end of lamp life a number of lamps may exhibit a rectifying effect. This can lead to overloading of the lamp control gear (ballast, transformer and/or starting device). In instances where lamp manufacturers warn against the possibility of rectification, or as referenced on the relevant lamp data sheets in IEC 61167, adequate protective measures should be taken to ensure that safety is maintained under this condition.

F.7 Reference document

IEC 60432-1, *Incandescent lamps – Safety specifications – Part 1: Tungsten filament lamps for domestic and similar general lighting purposes*

Copyright National Electrical Manufacturers Association
Provided by IHS under license with NEMA
No reproduction or networking permitted without license from IHS Not for Resale