Nationally Acknowledged International Standard

Approved: June 6, 2002 Secretariat: ANSLG-- National Electrical Manufacturers Association

for Electric Lamps

Incandescent Lamps-
Safety Specifications-

Tungsten Filament Lamps for Domestic and Similar General Lighting Purposes- Part 1

An American National Standard implies a consensus of those substantially concerned with its scope and provisions. It is intended as a guide to aid the manufacturer, the consumer, and the general public. The existence of an American National Standard does not in any respect preclude anyone, whether he has approved the standard or not, from manufacturing, marketing, purchasing, or using products, processes, or procedures not conforming to the standards. Users are cautioned to obtain the latest editions.
The American National Standards Institute does not develop standards and will in no circumstances give an interpretation of any American National Standard. Moreover, no person shall have the right or authority to issue an interpretation of an American National Standard in the name of the American National Standards Institute.
CAUTION NOTICE: This American National Standard may be revised or withdrawn at any time. The procedures of the American National Standards Institute require that action be taken periodically to reaffirm, revise, or withdraw this standard. Purchasers of American National Standards may receive current information on all standards by calling or writing the American National Standards Institute.

Copyright © 2002 by American National Standard Lighting Group-NEMA

Copyright National Electrical Manufacturers Association
Provided by IHS under license with NEMA
No reproduction or networking permitted without license from IHS Not for Resale

American National Standard

Approval of an American National Standard requires verification by ANSI that the requirements for due process, consensus, and other criteria for approval have been met by the standards developer. An American National Standard implies a consensus of those substantially concerned with its scope and provisions. Consensus is established when, in the judgment of the ANSI Board of Standards Review, substantial agreement has been reached by directly and materially affected interests. Substantial agreement means much more than a simple majority, but not necessarily unanimity. Consensus requires that all views and objections be considered, and that a concerted effort be made toward their resolution. The existence of an American National Standard does not in any respect preclude anyone, whether s/he has approved the standard or not, from manufacturing, marketing, purchasing, or using products, processes, or procedures not conforming to the standards. It is intended as a guide to aid the manufacturer, the consumer, and the general public.

The American National Standards Institute does not develop standards and will in no circumstances give an interpretation of any American National Standard. Moreover, no person shall have the right or authority to issue an interpretation of an American National Standard in the name of the American National Standards Institute. Requests for interpretations should be addressed to the Committee Secretariat referred to on the title page.

CAUTION NOTICE: This American National Standard may be revised or withdrawn at any time. The procedures of the American National Standards Institute require that action be taken periodically to reaffirm, revise, or withdraw this standard. Purchasers of American National Standards may receive current information on all standards by calling or writing the American National Standards Institute.

Printed and distributed by:

Information Handling Services/Global Engineering Documents
15 Inverness Way East, Englewood, CO 80112-5776
Under Contract with National Electrical Manufacturers Association

Copyright ©2002 by American National Standard Lighting Group
In Affiliation with National Electrical Manufacturers Association
All rights reserved.

No part of this publication may be reproduced in any form,
in an electronic retrieval system or otherwise, without
prior written permission of the publisher.
Printed in the United States of America

Copyright National Electrical Manufacturers Association
Provided by IHS under license with NEMA
No reproduction or networking permitted without license from IHS
Not for Resale

CONTENTS

Page

FOREWORD iv
CHAPTER 1
1 General notes: I-3
2 Deviations affecting clause 1.2 - Normative references I-3
3 Deviations affecting Clause 2.5.3 - Resistance to heat I-3
4 Deviations affecting Annex B - Packaging marking symbols I-3
CHAPTER 2
1 General II-7
1.1 Scope II-7
1.2 Normative references II-8
1.3 Definitions II-8
2 Requirements II-10
2.1 General II-10
2.2 Marking II-10
2.3 Protection against accidental contact in screw lampholders II-11
2.4 Lamp cap temperature rise (Δt_s) II-12
2.5 Resistance to torque II-12
2.6 Insulation resistance of B15d, B22d, E26/50×39 and E27/51×39 capped lamps and other lamps having insulated skirts II-14
2.7 Accidentally live parts II-15
2.8 Creepage distances for B15d and B22d capped lamps II-15
2.9 Safety at end of life II-15
2.10 Interchangeability II-16
2.11 Information for luminaire design II-16
3 Assessment II-17
3.1 General II-17
3.2 Whole production assessment by means of the manufacturer's records II-17
3.3 Assessment of the manufacturer's records of particular tests II-18
3.4 Rejection conditions of batches II-19
3.5 Sampling procedures for whole production testing II-19
3.6 Sampling procedures for batch testing II-21
Annex A (normative) Miscellaneous II-22
Annex B (normative) Packaging marking symbols II-23
Annex C(normative) Resistance to torque test procedures II-24
Annex D(normative) Induced-failure test II-27
Annex E(normative) Operation-to-failure test II-30
Annex F(normative) Acceptance numbers for various sample sizes and AQLs II-32
Annex G(normative) Acceptance criteria – Continuously variable results II-38
Annex H(normative) Induced-failure test – Grouping, sampling and compliance II-40
Annex J(normative) Method of measuring mains impedance II-43
Annex K(informative) Information for luminaire design II-45

Copyright © 2002 by American National Standard Lighting Group-NEMA

Copyright National Electrical Manufacturers Association
Provided by IHS under license with NEMA
No reproduction or networking permitted without license from IHS
Not for Resale

FOREWORD (This Foreword is not part of ANS/IEC C78.60432:1-2001)

Suggestions for improvement of this standard will be welcome. They should be sent to the Secretariat, C78 Committee, National Electrical Manufacturers Association, 1300 North 17th Street, Suite 1847, Rosslyn, VA 22209. This standard was processed and approved for submittal to ANSI by Accredited Standards Committee on Electric lamps, C78, and it's subcommittee, C78-1. Approval of the standard does not necessarily imply that all committee members voted for its approval.

In chapter II of this standard, the English text and the order of that text is exactly the same as that found in IEC 60432-1:1999. The reader should note, however, that the page numbers have been changed and French text is not included. Information concerning the approval of this standard is based on the documents listed in the table below:

Nationally Acknowledged International Standard	CDV	RV
First Edition	78(1)/3969	78(1)/3970V2

At the time of publications the C78 committee consisted of the following members:

Al Rousseau, Chair C78
David Mullen, Technical Coordinator
Randolph N. Roy, Secretariat
Ken Denton, Consulting Editor

Organization Represented:	*Name of Representative:*
Advance Transformer Company	Norman Grimshaw
Edison Electric Institute	William Maguire (Delegate)
GE Lighting	Edward Yandek
Holophane Co.	Michael Tanner
Illuminating Engineering Society	Rita M. Harrold
Intertek Testing Services, Inc.	David Ellis
MagneTek	Michael A. Stein
National Electrical Manufacturers Association	William Buckson (Principle Delegate) Don Miletich (Alternate Delegate) Fred Carpenter (Alternate Delegate)
OSRAM SYLVANIA INC.	Peter Bleasby
Philips Lighting Company	Al Rousseau
Underwriters Laboratories, Inc.	David Belt

At the time of publications the C78-1 Sub-committee consisted of the following members:

Bernie Rachel, Chair C78-1

Organization Represented:	*Name of Representative:*
GE Lighting	Bernie Rachel
OSRAM SYLVANIA INC.	David Mullen James Oetken (Alt.)
Philips Lighting Company	Al Rousseau Duane Will (Alt.) Alejandro Seyffert (Alt.)
Underwriters Laboratories, Inc.	David Belt Ken Kempel (Alt.)

 Copyright © 2002 by American National Standard Lighting Group-NEMA

Copyright National Electrical Manufacturers Association
Provided by IHS under license with NEMA
No reproduction or networking permitted without license from IHS
Not for Resale

CHAPTER 1

United States of America's

Deviations to
IEC 60432-1:1999

Copyright © 2002 by American National Standard Lighting Group-NEMA

Copyright National Electrical Manufacturers Association
Provided by IHS under license with NEMA
No reproduction or networking permitted without license from IHS

Not for Resale

THIS PAGE
INTENTIONALLY
LEFT BLANK

Copyright © 2002 by American National Standard Lighting Group-NEMA

Copyright National Electrical Manufacturers Association
Provided by IHS under license with NEMA
No reproduction or networking permitted without license from IHS
Not for Resale

1 General notes:

In North America the word “cap” is commonly known as base.

The following bases (caps) are not used in the United States:

B22d, E14, E26/25, E27, and E27/51x39

2 Deviations affecting clause 1.2 - Normative references

Replace IEC 60061-1 with:

ANSI C81.61-1990(R1996) *Electric lamp bases*

Replace IEC 60061-3 with:

ANSI C81.63-1991(R1996) *Gauges for Electric lamp bases and lampholders*

Replace IEC 60064 with:

ANSI C78.20-1995 *Incandescent lamps – A, G, PS, and similar shapes with E26 Medium screw bases,*

and

C78.21-1995 *Incandescent lamps - PAR and R shapes, and C78.23-1995 Incandescent lamps – miscellaneous types*.

Replace IEC 60598-1 with:

UL1598 Luminaires

Replace IEC 60887 with:

ANSI C79.1-1994 (R 1999) *Nomenclature for glass bulbs – Intended for use with electric lamps*

3 Deviations affecting Clause 2.5.3 - Resistance to heat

This heated torque test is not required in the United States.

4 Deviations affecting Annex B - Packaging marking symbols

The symbols in this annex are not required in the United States.

Copyright © 2002 by American National Standard Lighting Group-NEMA

Copyright National Electrical Manufacturers Association
Provided by IHS under license with NEMA
No reproduction or networking permitted without license from IHS
Not for Resale

THIS PAGE
INTENTIONALLY
LEFT BLANK

Copyright © 2002 by American National Standard Lighting Group-NEMA

Copyright National Electrical Manufacturers Association
Provided by IHS under license with NEMA
No reproduction or networking permitted without license from IHS

Not for Resale

CHAPTER 2

IEC 60432-1:1999

Incandescent Lamps-
Safety Specifications –

Tungsten Filament Lamps for Domestic and Similar General Lighting Purposes –

Part 1

Copyright © 2002 by American National Standard Lighting Group-NEMA

Copyright National Electrical Manufacturers Association
Provided by IHS under license with NEMA
No reproduction or networking permitted without license from IHS

Not for Resale

THIS PAGE
INTENTIONALLY
LEFT BLANK

Copyright © 2002 by American National Standard Lighting Group-NEMA

Copyright National Electrical Manufacturers Association
Provided by IHS under license with NEMA
No reproduction or networking permitted without license from IHS

Not for Resale

INCANDESCENT LAMPS – SAFETY SPECIFICATIONS –

Part 1: Tungsten filament lamps for domestic and similar general lighting purposes

1 General

1.1 Scope

International Standard IEC 60432-1 specifies the safety and interchangeability requirements of tungsten filament incandescent lamps for general lighting service having:

– rated wattage up to and including 200 W;

– rated voltage of 50 V to 250 V inclusive;

– bulbs of the A, B, C, G, M, P, PS, PAR or R shapes* , or other bulb shapes where the lamps are intended to serve the same purpose as lamps with the foregoing bulb shapes;

– bulbs with all kinds of finishes;

– caps B15d, B22d, E12, E14, E17, E26** , E26d, E26/50×39, E27 or E27/51×39.

As far as is reasonably practicable, this standard is also applicable to lamps with bulbs and caps other than those mentioned above, but which serve the same purpose.

This standard specifies the method a manufacturer should use to show that his product conforms to this standard on the basis of whole production appraisal in association with his test records on finished products. This method can also be applied for certification purposes. Details of a batch test procedure which can be used to make limited assessment of batches are also given.

This standard is concerned with safety criteria only and does not take into account the performance of tungsten filament lamps with respect to luminous flux, life or power consumption characteristics. Readers should refer to IEC 60064 for such characteristics with respect to types normally used for general lighting service.

———————

* See IEC 60887 for description of the letter symbols. Associated traditional names are:

– Pear shape	= A, PS
– Mushroom	= M
– Candle	= B, C (in North America)
– Round bulb	= P
– Globular	= G
– Reflector	= R
– Parabolic reflector	= PAR

** There are two variations of E26 caps which are not fully compatible. In this standard separate references are made to E26/24 caps used in North America and E26/25 caps used in Japan.

Copyright National Electrical Manufacturers Association
Provided by IHS under license with NEMA
No reproduction or networking permitted without license from IHS Not for Resale

1.2 Normative references

The following normative documents contain provisions which, through reference in this text, constitute provisions of this International Standard. For dated references, subsequent amendments to, or revisions of, any of these publications do not apply. However, parties to agreements based on this International Standard are encouraged to investigate the possibility of applying the most recent editions of the normative documents indicated below. For undated references, the latest edition of the normative document referred to applies. Members of IEC and ISO maintain registers of currently valid International Standards.

IEC 60061-1: *Lamp caps and holders together with gauges for the control of interchangeability and safety – Part 1: Lamp caps*

IEC 60061-3: *Lamp caps and holders together with gauges for the control of interchangeability and safety – Part 3: Gauges*

IEC 60064: *Tungsten filament lamps for domestic and similar general lighting purposes. Performance requirements*

IEC 60360: *Standard method of measurement of lamp cap temperature rise*

IEC 60410: *Sampling plans and procedures for inspection by attributes*

IEC 60432-2: *Incandescent lamps – Safety specification – Part 2: Tungsten halogen lamps for domestic and similar general lighting purposes*

IEC 60598-1: *Luminaires – Part 1: General requirements and tests*

IEC 60887: *Glass bulb designation system for lamps*

ISO 3951: *Sampling procedures and charts for inspection by variables for percent nonconforming*

1.3 Definitions

For the purpose of this International Standard the following definitions apply.

1.3.1
category
all lamps of one manufacturer having the same general construction (bulb shape, external dimensions, cap type, filament type), rated voltage, rated wattage and finish

For the purposes of this standard:

a) clear, frosted and coatings equivalent to a frosted finish are considered to be the same;

b) various coloured and white finishes are not considered to be the same.

NOTE – Lamps differing only by their caps (e.g. E27 and B22d) are of different “categories”, but of the same “type” as defined in IEC 60064.

1.3.2
type
lamps which, independent of the type of cap, are identical in photometric and electrical characteristics

Copyright National Electrical Manufacturers Association
Provided by IHS under license with NEMA
No reproduction or networking permitted without license from IHS Not for Resale

1.3.3
class
all lamps of one manufacturer having the same general construction (bulb shape, external dimensions, cap type, filament type), rated wattage and finish and differing only by their rated voltages, when these voltages fall within the same voltage range (e.g. 100 V to 150 V, 200 V to 250 V)

1.3.4
rated voltage
voltage or voltage range specified in the relevant lamp standard or assigned by the manufacturer or responsible vendor

(If lamps are marked with a voltage range, it shall be interpreted that they are appropriate for use on any supply voltage within that range.)

1.3.5
test voltage
rated voltage unless otherwise specified

(If lamps are marked with a voltage range, the test voltage shall be taken as the mean of the voltage range unless otherwise specified.)

1.3.6
rated wattage
wattage specified in the relevant lamp standard or assigned by the manufacturer or responsible vendor

1.3.7
end of life
instant when the energized lamp ceases to emit light

1.3.8
cap temperature rise (Δt_s)
surface temperature rise, above ambient temperature, of a standard test lampholder fitted to the lamp's cap, when measured in accordance with the standard method described in IEC 60360

1.3.9
design test
test made on a sample, for the purposes of checking compliance of the design of a category, class or group of categories with the requirements of the relevant clause

1.3.10
periodic test
test repeated at intervals in order to check that the product does not deviate in certain respects from the given design

1.3.11
running test
test applied at frequent intervals in order to provide data for assessment

1.3.12
batch
all the lamps of one category, identified as such, and put forward at one time for checking compliance

Copyright National Electrical Manufacturers Association
Provided by IHS under license with NEMA
No reproduction or networking permitted without license from IHS Not for Resale

1.3.13
whole production
production of all types of lamps within the scope of this standard manufactured during a period of 12 months and nominated by the manufacturer in a list for inclusion in the control, this list being incorporated in the certificate when certification is in operation

1.3.14
bowl mirror lamp
lamp with part of its bulb coated with reflecting material so as to reflect a substantial part of the light in the general direction of the lamp cap

1.3.15
maximum cap temperature
maximum temperature which the components in the cap area of a lamp are designed to withstand over the expected life of the lamp

1.3.16
lamp neck reference diameter
that diameter of a lamp which is of influence on the protection against accidental contact and which is measured at a defined distance from the solder contact plate

For E14 capped lamps, this distance is 30 mm.

2 Requirements

2.1 General

Lamps shall be so designed and constructed that in normal use they present no danger to the user or surroundings.

Lamps shall satisfy the requirements of this clause.

2.2 Marking

2.2.1 Mandatory markings

The following information shall be marked on the lamps and shall be legible and durable when subjected to the test procedure in A.1:

a) mark of origin (this may take the form of a trade mark, the manufacturer's name or the name of responsible vendor);

b) the rated voltage or the rated voltage range, marked as "V" or "volts";

c) the rated wattage, marked as "W" or "watts".

For lamps with 40 mm diameter bulbs or larger and with a realized wattage of 14 W or less, the wattage need not be marked.

The rated voltage marking for lamps intended for use on United Kingdom supply voltages may be 240 volts or 240 V.

NOTE – The United Kingdom implementation of 230 V European harmonization process allows supply voltages to remain at 240 V.

--`,,`,,`-`-`,,`,,`,`,,`---
Copyright National Electrical Manufacturers Association
Provided by IHS under license with NEMA
No reproduction or networking permitted without license from IHS
Not for Resale

2.2.2 Dichroic reflectorized (cool beam) lamps and bowl mirror lamps

The immediate lamp wrapping or container shall be marked with the relevant symbol as shown in annex B.

2.2.3 Lamps with operating position limitations

For lamps requiring operating position limitations, such as some 60 W candle and round bulb lamps capped with B22d or E27 caps which can comply with the requirement of the lamp cap temperature rise only by excluding the cap-up position, the immediate lamp wrapping or container shall be marked with the appropriate symbol. An example is shown in annex B.

NOTE – The requirements in 2.2.2 and 2.2.3 are intended as information for the end-user of the lamp.

2.3 Protection against accidental contact in screw lampholders

Dimensions of screw capped lamps shall be such that safety against accidental contact is ensured according to IEC 60061.

The lamps shall satisfy the gauges, defined in IEC 60061-3 in accordance with table 1.

Table 1 – Gauges for checking lamps for protection against accidental contact

Lamp cap	Gauge sheet No.	Lamp cap	Gauge sheet No.
E12	–	E26d	7006-29A
E14	see 2.3.1	E27/25 and E27/27	7006-51A
E17	–	E27/51×39	7006-51
E26/24	–		
E26/25	–		
E26/50×39	–		
NOTE – The dash marking in the Gauge sheet No. column means that at the moment no such test system has been developed.			

2.3.1 E14 capped lamps

E14 capped lamps shall satisfy the following requirements:

a) candle lamps shall be fitted with caps E14/25×17 and tested with gauge 7006-55;

b) round bulb, pigmy, tubular and reflector lamps having lamp neck reference diameters of 21 mm and greater shall be fitted with caps E14/25×17 and tested with gauge 7006-55;

c) round bulb, pigmy, tubular and reflector lamps having lamp neck reference diameters between 16 mm and 21 mm shall be fitted with caps E14/23×15 or E14/20;

d) round bulb, pigmy, tubular and reflector lamps having lamp neck reference diameters between 14 mm and 16 mm shall be fitted with caps E14/20.

In cases c) and d) a gauge is not required, because the choice of caps guarantees the same degree of safety as in cases a) and b).

Copyright National Electrical Manufacturers Association
Provided by IHS under license with NEMA
No reproduction or networking permitted without license from IHS Not for Resale

2.4 Lamp cap temperature rise (Δt_s)

2.4.1 Average cap temperature rise

The average cap temperature rise per class of lamp manufactured in a period of 12 months shall not exceed the following:

a) the appropriate value as specified in table 2; or

b) 45 K lower than the relevant values in table 2 where advantage is taken of the lower maximum cap temperature of 2.5.4 b).

However, lamps fitted with E12, E17 and E26 caps with higher Δt_s values intended for special applications are permitted, provided suitable cautionary notices accompany each lamp.

NOTE – In North America, lampholder and luminaire designs may be primarily aligned with the cap temperature rise characteristics of common frosted, clear and white lamps. Therefore, lamps with other bulb finishes or other characteristics yielding a higher cap temperature rise may require special cautionary notices.

2.4.2 Compliance

Compliance shall be checked by measurements of lamp cap temperature rise on lamps in the same class in accordance with the test procedure specified in IEC 60360.

If the lamp is marked with a voltage range, the cap temperature rise shall be measured at the mean voltage provided the limits of the voltage range do not differ by more than 2,5 % from the mean voltage. For lamps with a wider voltage range, the measurement shall be at the highest marked voltage.

NOTE – Table 2 shows upper limits for average cap temperature rise which apply to all lamps listed by wattage, bulb and cap. In practice, several design features such as light centre length, mount shape and bulb finish affect cap temperature rise, but such factors are encompassed in each limit.

2.4.3 Batch testing

For the testing of batches when the 20 lamp sample size is needed, the average shall not exceed the appropriate value in accordance with 2.4.1, with an allowance of +9 K.

2.5 Resistance to torque

2.5.1 Caps

Caps shall be so constructed and assembled to the bulbs that they remain attached during normal operation.

2.5.2 Unused lamps

For unused lamps, the lamp cap shall not move relative to the bulb when subjected to the relevant torque value from table 3 as tested in accordance with C.1. Where the means of attachment is other than by capping cement or adhesive, relative movement between bulb and cap is permitted, provided it does not exceed 10°.

2.5.3 Resistance to heat

The lamp cap and capping cement or other means of attachment shall endure exposure to heat at a level equal to the maximum cap temperature for which that class of lamp is designed.

The lamp cap shall not move relative to the bulb when subjected to the relevant torque values of table 4 after the heating test specified in C.2 at the appropriate temperature of 2.5.4. In the case where the means of attachment is other than by capping cement or adhesive, relative movement between bulb and cap is permitted, provided it does not exceed 10°.

Copyright National Electrical Manufacturers Association
Provided by IHS under license with NEMA
No reproduction or networking permitted without license from IHS Not for Resale

Table 2 – Maximum allowable cap temperature rise (Δt_s) for various lamp wattages and classes over a 12 month period average

Group number	Wattage (note 1)	Bulb shape	Δt_s max. K							
	W		B15d	B22d	E12	E14	E17	E26/24	E26/25	E27
1	25 and 30	A, PS, M and other shapes intended for use in the same luminaire	–	–	–	–	–	35 (note 2)	65	–
	40		–	–	–	–	–	70 (note 2)	85	–
	60		–	125	–	–	–	90 (note 2)	95	120
	100		–	135	–	–	–	110 (note 2)	110	130
	150 and 200		–	135	–	–	–	110 (note 2)	100	130
2	40	B, G (equal to or less than 45 mm diameter), P and other shapes intended for use in the same luminaire	135	140	–	130	–	90	–	140
	60		145	125 (note 4)	–	140	–	90	–	120 (note 4)
3	15	C and other shapes intended for use in the same luminaire	–	–	90 (note 3)	–	90 (note 3)	–	90	–
	25		–	–	110 (note 6)	–	110 (note 3)	110	110	–
	40		–	–	130 (note 6)	–	130 (note 3)	135 (note 7)	130	–
	60		–	–	145 (note 6)	–	130 (note 3)	165 (note 7)	130	–
4	25 and 40	G (>45 mm	–	–	–	–	110	–	110	–
	60 and 100	diameter)	–	–	–	–	–	–	110	–
5	25	P and G (≤45 mm diameter with bowl mirror	–	–	–	–	110	–	110	–
	40		135	135	–	135	–	–	110	135
	60		135	–	–	135	–	–	110	–
6	60	A and PS with bowl mirror	–	130	–	–	–	–	110	130
	100		–	135	–	–	–	–	110	135
	150 and 200		–	135	–	–	–	–	–	135
7	25	R shapes	–	–	–	–	85	–	–	–
	40		120	120	–	120	95	110	95	120
	60		–	130	–	–	105	140 (note 8)	105	130
	100, 150 and 200		–	135	–	–	–	140 (notes 8 and 9)	110	135
8	75	PAR shapes (note 5)	–	–	–	–	–	–	85	150
	100		–	–	–	–	–	–	100	150
	150		–	–	–	–	–	–	125	150
9	150	PAR shapes with dichroic reflector (note 5)	–	–	–	–	–	–	150	175

NOTE 1 – For lamps with intermediate wattage values, the requirement of the next higher value shown applies.

NOTE 2 – These values are established to account for applications in lower temperature lampholders as used in North America.

NOTE 3 – Under consideration.

NOTE 4 – This may require a limitation on operating position.

NOTE 5 – Lamps with skirted caps: E26/50×39, E27/51×39, etc.

NOTE 6 – Some lamp classes may be limited to operation in the cap-down or cap-down-through-horizontal positions by the manufacturer.

NOTE 7 – Some lamp classes may be limited to operation in the cap-down position by the manufacturer.

NOTE 8 – Some lamp classes may be limited by the manufacturer to applications in high-temperature lampholders, because low-temperature lampholders could deteriorate.

NOTE 9 – Some lamp classes may be limited by the manufacturer to applications at 260 °C maximum cap temperature in high-temperature lampholders.

Copyright National Electrical Manufacturers Association
Provided by IHS under license with NEMA
No reproduction or networking permitted without license from IHS
Not for Resale

2.5.4 Heating treatment temperatures

The heating treatment shall be conducted at one of the following levels:

a) the maximum cap temperature, in relation to cap type as specified in table K.1; or

b) for certain classes of lamps where 210 °C is specified in table K.1, the manufacturer may elect to design lamps that can withstand a maximum cap temperature of 165 °C, in which case the heating test is carried out at 165 °C, provided their rated wattage is 15 W or lower, and the lamp is not a reflector or bowl mirror type.

NOTE – For special applications in North America, maximum cap temperatures lower than those shown in table K.1 may be assigned by the lamp manufacturer. When such a lower temperature lamp class is established, the manufacturer is encouraged to:
– propose special limits for this standard;
– alert luminaire manufacturers.

Table 3 – Torque test values for unused lamps

Cap type	Torque value Nm
B15d	1,15
B22d	3,0
E12	0,8
E14	1,15
E17	1,5
E26, E26d, E27, E26/50×39 and E27/51×39	3,0

Table 4 – Torque test values after heating

Cap type	Torque value Nm
B15d	0,3
B22d	0,75
E12	0,5
E14	1,0
E17	1,0
E26, E26d, E27, E26/50×39 and E27/51×39	2,5

2.6 Insulation resistance of B15d, B22d, E26/50×39 and E27/51×39 capped lamps and other lamps having insulated skirts

Insulation resistance between the shell of the cap and the contacts of bayonet capped lamps, or between the shell and the insulated skirt of skirted Edison screw capped lamps, shall be not less than 2 MΩ when measured in accordance with the procedure of A.3.

Copyright National Electrical Manufacturers Association
Provided by IHS under license with NEMA
No reproduction or networking permitted without license from IHS Not for Resale

2.7 Accidentally live parts

2.7.1 Metal parts intended to be insulated from live parts

Metal parts intended to be insulated from live parts shall not be or become live. Any moveable conductive material shall be placed without the use of a tool, in the most onerous position before inspection in accordance with A.4.

2.7.2 Bayonet caps

On bayonet caps, any projection from the contact plate shall not come within 1 mm of metal parts intended to be insulated.

2.7.3 Edison screw caps

On Edison screw caps any projection from the cap shell shall not project more than 3 mm from the surface of the cap. See figure 1.

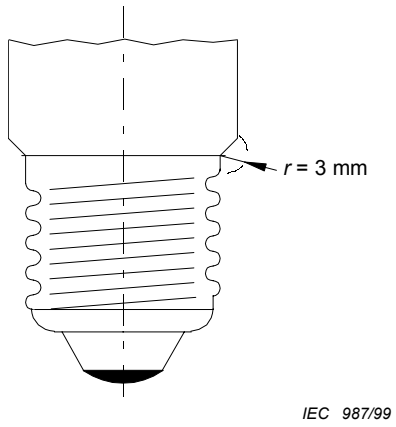

Figure 1 – Edison screw cap

2.8 Creepage distances for B15d and B22d capped lamps

The minimum creepage distance between the metal shell of the cap and the contacts shall be in accordance with the distance given on the relevant cap sheet in IEC 60061-1.

2.9 Safety at end of life

When tested under the specified conditions, lamp failure shall not be accompanied by breakage of the outer glass envelope nor its ejection from the cap. For bayonet capped lamps, it is also required that there shall not be an internal short-circuit to the cap shell after the test.

Copyright National Electrical Manufacturers Association
Provided by IHS under license with NEMA
No reproduction or networking permitted without license from IHS
Not for Resale

The test conditions are:

– an induced-failure test in accordance with annex D or in accordance with the alternative induced-failure test of annex A of IEC 60432-2, and

– an operation-to-failure test in accordance with annex E.

NOTE 1 – In case of disagreement, tests of annexes D and E are the reference methods.

NOTE 2 – The induced-failure test is not suitable for lamps with rated voltages below 100 V; however, the alternative induced-failure test is suitable for lamps with rated voltages below 100 V.

NOTE 3 – If lamps fail the induced-failure test, it is not necessary for them to be submitted to the operation-to-failure test.

NOTE 4 – Under circumstances defined in H.3, the operation-to-failure test may be used in place of the induced-failure test.

2.10 Interchangeability

Interchangeability shall be ensured by the use of caps that are in accordance with IEC 60061-1.

Finished lamps shall satisfy the gauges for checking the dimensions controlling interchangeability in accordance with table 5. The gauges are those shown on particular standard sheets included in IEC 60061-3.

2.11 Information for luminaire design

Refer to annex K.

Table 5 – Interchangeability gauges and lamp cap dimensions

Lamp cap	Cap dimensions to be checked by the gauge	Gauge sheet
B15d, B22d	*A* min. *A* max., *D*1 max., *N* min. Insertion of the cap in the lampholder Retention of the cap in the lampholder	7006-10 7006-11 7006-4A 7006-4B
E12	Maximum diameter of screw thread Additional “Go” gauge for screw thread Minimum major diameter of the cap screw thread	7006-27H 7006-27J 7006-28C
E14	Maximum dimensions of screw thread Minimum major diameter of screw thread Dimension *S*1	7006-27F 7006-28B 7006-27G
E17	*	*
E26, E26d	Maximum dimensions of screw thread Additional “Go” gauge for screw thread	7006-27D 7006-27E
E27	Maximum dimensions of screw thread Minimum major diameter of screw thread Dimension *S*1	7006-27B 7006-28A 7006-27C
*Under consideration.		

Copyright National Electrical Manufacturers Association
Provided by IHS under license with NEMA
No reproduction or networking permitted without license from IHS Not for Resale

3 Assessment

3.1 General

This clause specifies the method a manufacturer should use to show that his product conforms to this standard on the basis of whole production assessment in association with his test records on finished products. This method can also be applied for certification purposes. Clauses 3.2, 3.3 and 3.5 give details of assessment by means of the manufacturer's records.

Details of a batch test procedure which can be used to make limited assessment of batches are given in 3.4 and 3.6. Requirements for batch testing are included in order to enable the assessment of batches presumed to contain unsafe lamps. As some safety requirements cannot be checked by batch testing and as there may be no previous knowledge of the manufacturer's quality, batch testing cannot be used for certification purposes nor in any way for an approval of the batch. Where a batch is found to be acceptable, a testing agency may only conclude that there is no reason to reject the batch on safety grounds.

3.2 Whole production assessment by means of the manufacturer's records

3.2.1 The manufacturer shall show evidence that his products comply with the particular requirements of 3.3. To this end, the manufacturer shall make available all the results of his product testing pertinent to the requirements of this standard.

3.2.2 The test results may be drawn from working records and as such may not be immediately available in collated form.

3.2.3 The assessment shall be based in general on individual factories each meeting the acceptance criteria of 3.3. However, a number of factories may be grouped together, providing they are under the same quality management. For certification purposes, one certificate may be issued to cover a nominated group of factories but the certification authority shall have the right to visit each plant to examine the relevant local records and quality control procedures.

3.2.4 For certification purposes, the manufacturer shall declare a list of marks of origin and corresponding lamp categories or classes which are within the scope of this standard and manufactured in a nominated group of factories. The certificate shall be taken to include all lamps so listed made by the manufacturer. Notification of additions or deletions may be made at any time.

3.2.5 In presenting the test results, the manufacturer may combine results of different lamp classes according to column 4 of table 6.

The whole production assessment requires that the quality control procedures of a manufacturer shall satisfy recognized quality system requirements for final inspection. Within the framework of a quality assurance system based also on in-process inspection and testing the manufacturer may show compliance with some of the requirements of this standard by means of in-process inspection instead of finished product testing.

3.2.6 The manufacturer shall provide sufficient test records with respect to each clause as indicated in column 5 of table 6.

3.2.7 The number of non-conformities in the manufacturer's records shall not exceed the limits shown in annex F relevant to the Acceptable Quality Level (AQL) values shown in column 6 of table 6.

Copyright National Electrical Manufacturers Association
Provided by IHS under license with NEMA
No reproduction or networking permitted without license from IHS
Not for Resale

3.2.8 The period of review for assessment purposes need not be limited to a predetermined year, but may consist of 12 consecutive calendar months immediately preceding the date of review.

3.2.9 A manufacturer who has met, but no longer meets the specified criteria, shall not be disqualified from claiming compliance with this standard providing he can show that:

a) action has been taken to remedy the situation as soon as the trend was reasonably confirmed from his test records;

b) the specified acceptance level was re-established within a period of:

   – six months for 2.4.1, 2.5.3 and 2.9;

   – one month for other clauses.

When compliance is assessed after corrective action has been taken in accordance with items a) and b), the test records of these lamp categories which do not comply shall be excluded from the 12-month summation for their period of non-compliance. The test results relating to the period of corrective action shall be retained in the records.

3.2.10 A manufacturer who has failed to meet the requirements of a clause where grouping of the test results is permitted under 3.2.5 shall not be disqualified for the whole of the lamp classes so grouped if he can show by additional testing that the problem is present only in certain classes so grouped. In this case, either these classes are dealt with in accordance with 3.2.9 or they are deleted from the list of classes which the manufacturer may claim are in conformity with the standard.

3.2.11 In the case of a category or class which has been deleted under 3.2.10 from the list (see 3.2.4), it may be reinstated if satisfactory results are obtained from tests on a number of lamps equivalent to the minimum annual sample specified in table 6, required by the clause where non-compliance occurred. This sample may be collected over a short period of time.

3.2.12 In the case of new products, there may be features which are common to existing lamp classes, and these can be taken as being in compliance if the new product is taken into the sampling scheme as soon as manufacture is started. Any feature not so covered shall be tested before production starts.

3.3 Assessment of the manufacturer's records of particular tests

3.3.1 Table 6 specifies the type of test and other information which applies to the method of assessing compliance to the requirements of various clauses. For some particular tests, more detailed information is given below.

A design test need only be repeated when a substantial change is made in the physical or mechanical construction, materials, or manufacturing process used to manufacture the relevant product. Tests are required for only those properties affected by the change.

3.3.2 With regard to the resistance to torque after the heating requirements of 2.5.3, the manufacturer has the option of two test procedures, as set out in annex C.

NOTE – Provided that the data from the variables method C.1.4 b), form a near Gaussian distribution, normal statistical techniques may be used to assess compliance, and an equivalent degree of confidence to that obtained using method C.1.4 a) may be achieved with the smaller samples. In this case the assessment shall apply the rules set out in annex G.

Copyright National Electrical Manufacturers Association
Provided by IHS under license with NEMA
No reproduction or networking permitted without license from IHS Not for Resale

3.3.3 With regard to the cap temperature rise requirements of 2.4, the manufacturer's records shall show either:

– a design test, if the cap temperature rise of each lamp in the samples of five is at least 5 K below the value of table 2; or

– the results of periodic testing, where the average shall not exceed the value of table 2. Where assessment is made for a lesser period than the full 12 months, a coefficient of variation of 5 % shall be assumed in making the assessment.

3.3.4 Creepage distance is assessed as a design test. If all five lamps of the sample meet the requirements of 2.8, the test is passed. A non-conformity is recorded if two or more lamps fail. If one lamp fails, a further sample of five is to be taken and if no further lamps fail, the test is passed.

3.4 Rejection conditions of batches

3.4.1 With the exception of the cap temperature rise test, which is covered by 3.4.2, rejection is established if any rejection number in table 7 is reached. Irrespective of the quantity tested, a batch shall be rejected as soon as the rejection number for a particular test is reached.

3.4.2 For the batch test of lamp cap temperature rise, five lamps shall be first tested. Provided that all the lamps have a cap temperature rise at least 5 K lower than the appropriate values shown in table 2, then no further testing for cap temperature rise is necessary. If at least one of the five lamps in the test has a cap temperature rise within 5 K of the appropriate value in table 2, then a total of 20 lamps shall be tested and the average temperature shall not exceed the requirements of 2.4.2.

3.5 Sampling procedures for whole production testing

3.5.1 The conditions of table 6 apply.

3.5.2 The whole production running tests shall be applied at least once per production day. They may also be based on in-process inspection and testing.

The frequency of application of the various tests may be different, providing the conditions of table 6 are met.

3.5.3 Whole production tests shall be made on samples randomly selected at a rate not less than that indicated in column 5 of table 6. Lamps selected for one test need not be used for other tests.

3.5.4 For whole production testing of the requirements for accidentally live parts, (see 2.7), the manufacturer shall demonstrate that there is a continuous 100 % inspection.

3.5.5 In relation to the safety at end of life (see 2.9), the manufacturer shall have a sampling plan which does not deliberately exclude any of the classes in his nominated list.

Copyright National Electrical Manufacturers Association
Provided by IHS under license with NEMA
No reproduction or networking permitted without license from IHS
Not for Resale

Table 6 – Grouping of test records, sampling and acceptable quality levels (AQL)

1	2	3	4	5		6
				Minimum annual sampling per grouping		
Clause or subclause number	Tests	Type of test	Grouping of test records between lamp classes	For lamps made most of the year	For lamps made in-frequently	AQL[1] %
2.2.1	Marking legibility	Running	All classes with same method of marking	200	–	2,5
	Marking durability	Running	All classes with same method of marking	200	–	2,5
2.2.2	Presence of required symbol	Running	All classes with same method of marking	–	32	2,5
2.3	Accidental contact	Running	All lamps tested with their appropriate gauge	200	32	1,5
2.4	Cap temperature rise	Design or periodic[5]	Lamps by class	5 at any design change		
				20		
2.5.2	Resistance to torque					
	Unused lamps					
	a) test by attributes according to C.1.4 a)	Running	All lamps with the same cement and the same cap	200	80	0,65
	b) test by variables[3] according to C.1.4 b)	Running	All lamps with the same cement and the same cap	75	25	0,65
2.5.3	After heating					
	a) test by attributes according to C.2.3 a)	Periodic[2]	All lamps with the same cement and the same cap	125	80	0,65
	b) test by variables[3] according to C.2.3 b)	Periodic[2]	All lamps with the same cement and the same cap	50	20	0,65
2.6	Insulation resistance	Running	All classes with B15d, B22d, E26/50×39 and E27/51×39 caps	315		0,4
2.7	Accidentally live parts	100 % inspection	–	–	–	–
2.8	Creepage distances	Design	a) All lamps with B15d caps	5 or 10 at design change[4]		
			b) All lamps with B22d caps	5 or 10 at design change[4]		
2.9	Induced-failure	Design	See H.1	H.2		H.4
	Operation-to-failure	Periodic	All lamps of all classes	315		0,25
2.10	Interchangeability	Periodic	All classes with the same cap	32		2,5

1) Use of this term and table F.1 is as put forth in IEC 60410 where operating characteristics can be found.
2) For lamps with uncemented caps, this shall be a design test.
3) Assessed in accordance with annex G.
4) See 3.3.4.
5) See 3.3.3.

Copyright National Electrical Manufacturers Association
Provided by IHS under license with NEMA
No reproduction or networking permitted without license from IHS
Not for Resale

Table 7 – Batch sample size and rejection number

Clause or subclause number	Test	Number of lamps tested	Rejection number
2.2.1	Marking legibility	200	11
2.2.1	Marking durability	200	11
2.2.2	Presence of required symbol	200	11
2.3	Accidental contact (Edison screw caps)	200	8
2.4	Cap temperature rise	See 3.4.2	
2.5.2	Resistance to torque (unused lamps)	125	3
2.5.3	Resistance to torque (after heating)	125	3
2.6	Insulation resistance	500	6
2.7	Accidentally live parts	500	1
2.8	Creepage distance B15d or B22d capped lamps	See 3.3.4	–
2.9	End of life	200	2
2.10	Interchangeability	200	11

3.6 Sampling procedures for batch testing

3.6.1 The lamps for testing shall be selected in accordance with a mutually agreed method so as to ensure proper representation. Selection shall be randomly made as nearly as possible from one-third of the total number of containers in the batch, with a minimum of ten containers.

3.6.2 In order to cover the risk of accidental breakage, a certain number of lamps in addition to the test quantity shall be selected. These lamps shall only be substituted for lamps of the test quantities if necessary to make up the required quantities of lamps for the tests.

It is not necessary to replace an accidentally broken lamp if the results of the test are not affected by its replacement, provided the required quantity of lamps for the following test is available. If replaced, such a broken lamp shall be neglected in calculating the test results.

Lamps having broken bulbs when removed from the packaging after transit shall not be included in the test.

3.6.3 Number of lamps in the batch sample

There shall be at least 500 lamps (see table 7).

3.6.4 Sequence of the tests

The testing shall be carried out in the most convenient sequence of clause or subclause numbers listed in table 7.

Copyright National Electrical Manufacturers Association
Provided by IHS under license with NEMA
No reproduction or networking permitted without license from IHS
Not for Resale

Annex A
(normative)

Miscellaneous test procedures

A.1 Marking

A.1.1 The presence and legibility of the marking is checked by visual inspection.

A.1.2 The durability of the marking is checked by applying the following test on unused lamps.

The area of the marking shall be rubbed by hand with a smooth cloth dampened with water for a period of 15 s.

A.1.3 The presence of the proper marking on the immediate lamp wrapping or container is checked by visual inspection.

A.2 Use of cap gauges

The procedure is specified on the relevant data sheets in IEC 60061-3.

A.3 Insulation resistance

A.3.1 Insulation resistance measurements shall be carried out with suitable test equipment using a d.c. voltage of 500 V.

A.3.2 Measurements are made on finished lamps. The lamps, if necessary, shall be aged at their rated voltage for 1 h.

A.4 Projecting metal parts

The presence of metal parts projecting outside the limits of 2.7 shall be checked by either an appropriate automatic system or by visual inspection. In addition, there shall be regular daily checks of the equipment or verification of the effectiveness of the inspection.

Copyright National Electrical Manufacturers Association
Provided by IHS under license with NEMA
No reproduction or networking permitted without license from IHS Not for Resale

Annex B
(normative)

Packaging marking symbols

The height of the graphical symbols shown below shall be not less than 5 mm, and for letters, not less than 2 mm on the lamp package.

B.1 Dichroic reflectorized cool beam lamps and bowl mirror lamps

These symbols are to safeguard against the use of the lamps in unsuitable luminaire installations where overheating could occur. Such luminaires are also required to be marked with a symbol. See IEC 60598-1.

Dichroic reflectorized cool beam lamps

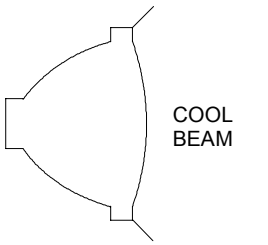

IEC 988/99

Bowl mirror lamps

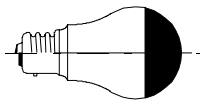

IEC 989/99

NOTE – The cap shown in the symbol may be bayonet or Edison screw. The bulb shape may be varied to show the shape of the lamp.

B.2 Lamps with operating position limitations

These symbols are to indicate that only cap-down to horizontal operation is permitted because of possible overheating.

There shall be text in the vicinity of the symbol, to avoid it being read upside down.

The symbols for candle and round bulb lamps are given as examples.

Candle lamps

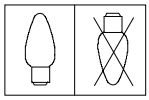

IEC 990/99

Round bulb lamps

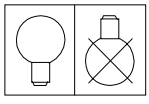

IEC 991/99

Copyright National Electrical Manufacturers Association
Provided by IHS under license with NEMA
No reproduction or networking permitted without license from IHS
Not for Resale

Annex C
(normative)

Resistance to torque test procedures

C.1 Resistance to torque (unused lamps)

C.1.1 Details for torque test holders are shown in figure C.1 for B15 and B22 caps and in figure C.2 for E12, E14, E17, E26, E26d and E27 caps.

C.1.2 Before each use, the test holder for screw caps shall be checked to ensure that it is clean and completely free of lubricants and grease.

C.1.3 The cap of the test lamp shall be placed in the appropriate holder. Either the cap or the bulb may be mechanically clamped.

C.1.4 Torque shall be applied steadily to the appropriate lamp component, so that no jerk occurs. The application of the torque may follow either of the following schemes.

a) The required torque shall be applied, according to the limits given in table 3.

b) Higher torque values than the relevant limit shall be applied so that the value of torque for failure is obtained. In this case, the equipment is to be provided with suitable means for measuring torque over a wide range of failure levels.

C.2 Resistance to torque following heating

C.2.1 Lamps shall be placed in an oven.

C.2.1.1 The required temperature as given in 2.5.4 shall be maintained throughout the working space where the lamps are placed.

C.2.1.2 The oven shall be maintained within a temperature tolerance of $^{0}_{-5}$ °C.

C.2.1.3 The test lamps shall be heated continuously for a period of 1,5 times the lamp life declared by the manufacturer.

C.2.2 Upon completion of the specified period, the lamps are allowed to cool to room temperature.

C.2.3 Measurement of resistance to torque

Follow the procedures of C.1.1 through to C.1.4 above with the following modifications:

a) When using scheme C.1.4 a), the required torque as given in table 4 shall be applied.

b) It may be necessary to clamp the cap shell of a bayonet capped lamp so that the cap pins do not shear off in the holder when tested in accordance with C.1.4 b).

Copyright National Electrical Manufacturers Association
Provided by IHS under license with NEMA
No reproduction or networking permitted without license from IHS Not for Resale

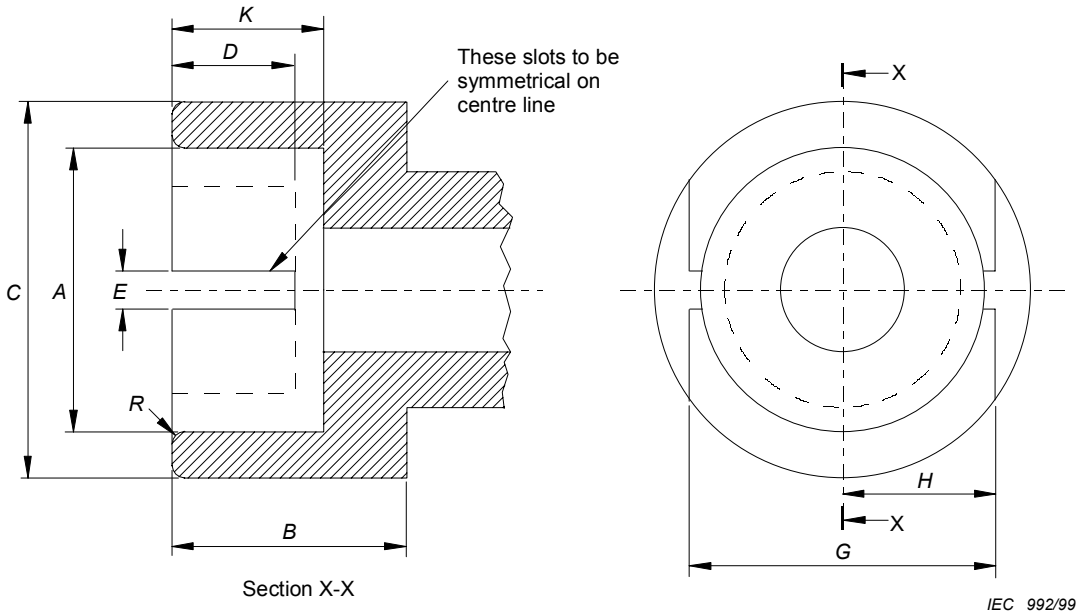

Dimension	B15	B22	Tolerance
	mm	mm	mm
A	15,27	22,27	+0,03
B	19,0	19,0	Min.
C	21,0	28,0	Min.
D	9,5	9,5	Min.
E	3,0	3,0	+0,17
G	18,3	24,6	±0,3
H	9,0	12,15	Min.
K	12,7	12,7	±0,3
R	1,5	1,5	Approximate
NOTE – The drawing illustrates the essential dimensions of the holder which need only be checked if doubt arises from the application of the test.			

Figure C.1 – Holder for torque test on lamps with bayonet caps

Copyright National Electrical Manufacturers Association
Provided by IHS under license with NEMA
No reproduction or networking permitted without license from IHS
Not for Resale

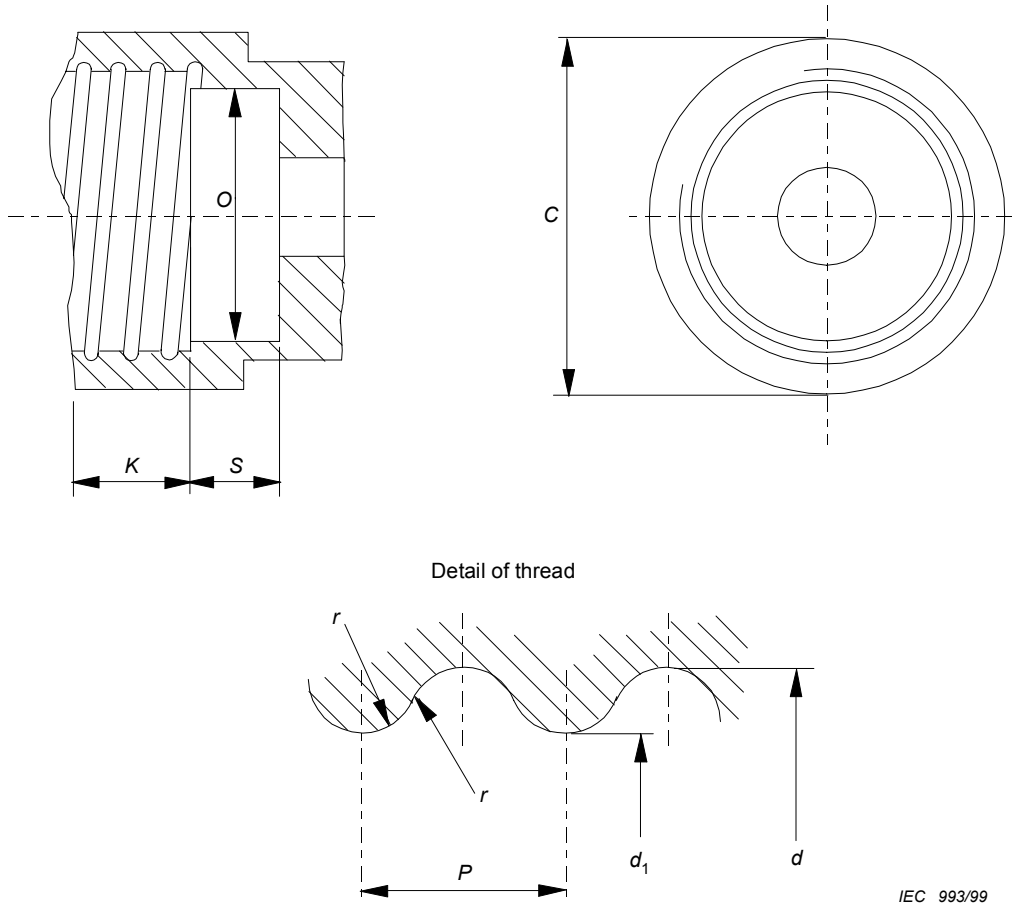

Surface finish of screw thread R_a = 0,4 μm minimum (see note).
NOTE – A smoother surface might result in mechanical overloading of the cap, see also annex C, subclause C.1.2

Dimensions in millimetres

Dimension	E12	E14	E17	E26 and E26d	E27	Tolerance
C	15,27	20,0	20,0	32,0	32,0	Min.
K	9,0	11,5	10,0	11,0	13,5	$^{0,0}_{-0,3}$
O	9,5	12,0	14,0	23,0	23,0	$^{+0,1}_{-0,1}$
S	4,0	7,0	8,0	12,0	12,0	Min.
d	11,89	13,89	16,64	26,492	26,45	$^{+0,1}_{0,0}$
d_1	10,62	12,29	15,27	24,816	24,26	$^{+0,1}_{0,0}$
P	2,540	2,822	2,822	3,629	3,629	–
r	0,792	0,822	0,897	1,191	1,025	–
NOTE – The drawing illustrates the essential dimensions of the holder which need only be checked if doubt arises from the application of the test.						

Figure C.2 – Holder for torque test on lamps with screw caps

Copyright National Electrical Manufacturers Association
Provided by IHS under license with NEMA
No reproduction or networking permitted without license from IHS
Not for Resale

Annex D
(normative)

Induced-failure test

D.1 Test circuit and equipment

D.1.1 The test circuit shown in figure D.1 shall consist of the following:

a) a 50 Hz or 60 Hz mains supply line whose voltage shall be the rated voltage of the lamps, within a –2 % tolerance. The test voltage of a lamp with a voltage range marking shall be that voltage which is halfway between the range limits;

b) switch S;

c) inductance L to bring the total inductance to the value specified in D.2;

d) resistor R to bring the total resistance to the values specified in D.2;

e) lampholder H which for B15 and B22 capped lamps shall have an earthed shell;

f) fuse F with a rating not less than 25 A, for 220 V – 250 V lamps. For 100 V – 150 V lamps, 15 A (under consideration).

D.1.2 A safety cover shall be provided to cover the lamp in the test position.

D.1.3 The pulse generator shall be capable of giving a pulse which meets the following characteristics, as measured across the test lamp (see figures D.2 and D.3):

– peak value (kV): 2,9 – 3,1 for lamps with a rated wattage up to and including 100 W;

2,4 – 3,1 for lamps with a rated wattage higher than 100 W;

– width t_w (at 40 % of peak value) (μs): 8 to 20 for lamps with a rated wattage up to and including 100 W;

10 maximum for lamps with a rated wattage higher than 100 W;

– rise time t_r (μs): 1 maximum;

– timing (electrical degrees) : $\phi = 70° \pm 10°$

NOTE – The peak value is measured from the zero voltage level (see figure D.3).

D.1.4 The inductance and resistance of the whole circuit, including the items of the various components in D.1.1 and including any fuse and all wiring, shall meet the following requirements:

a) for lamp voltage ratings between 200 V and 250 V
   - resistance (Ω): 0,4 to 0,45;
   - inductance (mH): 0,6 to 0,65;

b) for lamp voltage ratings between 100 V and 150 V
   - resistance (Ω): 0,3 to 0,35;
   - inductance (mH): 0,6 to 0,65.

--`,,`-`-`,,`,,`,`,,`---
Copyright National Electrical Manufacturers Association
Provided by IHS under license with NEMA
No reproduction or networking permitted without license from IHS
Not for Resale

D.2 Test procedures

D.2.1 The lamp to be tested shall be inserted in the lampholder and the safety cover put in place.

D.2.2 The lamp shall be switched on applying line voltage only. At least 5 s later, a single high-voltage pulse is applied. If the lamp remains lit, the application of the pulse shall be repeated five times.

D.2.3 If the lamp still remains lit, it may be conditioned by being operated at an over-voltage for a period of calculated time equivalent to 60 % of rated life (see H.2.3). It shall then be re-subjected to the high-voltage pulse set out in D.2.2.

The equivalent life shall be calculated in accordance with the following equation:

$$L_o = L\left(\frac{U}{U_o}\right)^n$$

where

L_o is the life at rated voltage;

L is the life at test voltage;

U_o is the rated voltage;

U is the test voltage;

n equals 13 for vacuum lamps and 14 for gas filled lamps.

D.3 Conditioning procedure

D.3.1 Conditioning by a test house

Test houses are permitted to condition up to 10 % overvoltage. Any burnouts occurring during this conditioning shall be counted in the final assessment, provided the impedance limits are met.

D.3.2 Conditioning by the manufacturer

Conditioning is permitted up to 30 % overvoltage. If the overvoltage is greater than 10 % or the test racks do not comply with the requirements, then burnouts occurring during the conditioning shall not be counted in the final assessment.

NOTE – The conditioning requirements for a test house are different from those of a manufacturer in order to ensure that a test house does not inadvertently put unrealistic stresses on the lamps during conditioning. On the other hand, they give the manufacturer the possibility of saving testing time and costs by using his detailed knowledge of the stresses his lamps can resist.

D.4 Inspection and assessment

After the test, each test lamp is examined. If either,

a) the bulb is no longer intact, or

b) the bulb is detached from the cap, or

c) for bayonet caps only there is a short-circuit between either one of the contacts and the shell, then the lamp is deemed to have failed the test and is counted as a non-conformity.

If the lamp remains lit after the test procedure specified in D.2.3, it is deemed to have passed.

Copyright National Electrical Manufacturers Association
Provided by IHS under license with NEMA
No reproduction or networking permitted without license from IHS Not for Resale

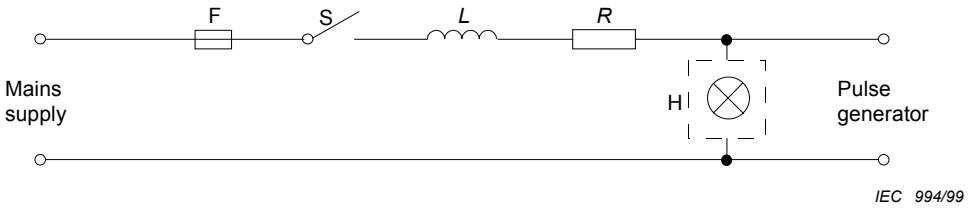

Figure D.1

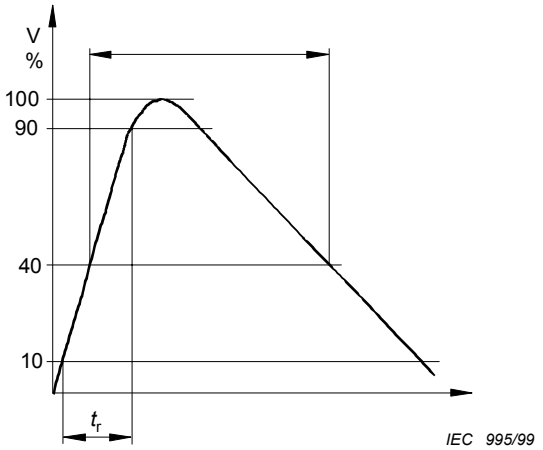

Figure D.2

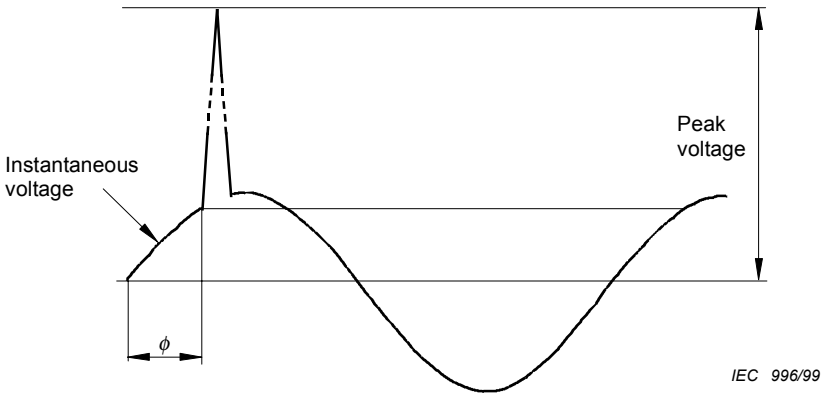

Figure D.3

Copyright National Electrical Manufacturers Association
Provided by IHS under license with NEMA
No reproduction or networking permitted without license from IHS
Not for Resale

Annex E
(normative)

Operation-to-failure test

The test shall be carried out under the following conditions.

E.1 The test is continued until end of life. The test is carried out at the rated voltage $^{+10}_{0}$ % except on lamps marked with a voltage range where this voltage range exceeds 2,5 % of the mean voltage when the test is carried out at the upper marked voltage $^{+10}_{0}$ %.

E.2 The operating position shall be cap-up unless otherwise specified by the manufacturer. The lampholder's axis on the test racks shall not deviate from the specified operating position by more than 5°.

E.3 The test equipment shall be in accordance with the following requirements:

– lampholders on test racks shall be of sturdy construction and shall be so designed to ensure adequate electrical contact and to prevent overheating;

– the voltage drop between the point of measurement on the supply line and the cap contacts shall not exceed 0,1 % of the test voltage;

– for bayonet lampholders the cap shall be substantially at the same potential as the contact which is not connected to the fused main supply lead;

– the temperature in operation at the junction between the cap and the bulb shall not exceed the appropriate limit given in table K.1;

– lamps shall not be operated at excessive temperatures nor shall there be undue heating of a lamp by others;

– lamps shall operate free from noticeable vibration. No vibration or shocks shall be perceptible when touching the lampholders, either during operation or when switching on or off;

– lamps shall be switched off twice daily for periods of not less than 15 min. In North America test lamps are switched off once daily for a period of 30 min.

NOTE – It is recommended that bayonet lampholders of the spring-loaded plunger type are not used for prolonged testing.

Copyright National Electrical Manufacturers Association
Provided by IHS under license with NEMA
No reproduction or networking permitted without license from IHS Not for Resale

E.4 For lamps of 100 V to 250 V rating, the test rack circuit shall have the characteristics specified in table E.1 when measured by the method in annex J.

Table E.1 – Test rack circuit characteristics

	100 V to 150 V	200 V to 250 V
– Resistance (Ω)	Note 3	0,5 ± 0,1
– Inductance (mH)	Note 3	0,5 ± 0,1 Note 1
– Individual external lamp fuse, minimum rating (A)	Note 3	10 slow acting
– Surge limit (V)	Note 2	Note 2

NOTE 1 – Manufacturers undertaking their own testing may use higher levels of inductance provided the total impedance does not exceed 0,7 Ω. On a 60 Hz supply, the inductance should be proportionally lower (values under consideration).

NOTE 2 – A surge limiting means may be fitted to comply with the performance requirements of IEC 60064.

NOTE 3 – Under consideration.

E.5 For 200 V – 250 V test racks, the maximum lamp current loading that shall be switched on simultaneously is 16 A.

Copyright National Electrical Manufacturers Association
Provided by IHS under license with NEMA
No reproduction or networking permitted without license from IHS
Not for Resale

Annex F
(normative)

Acceptance numbers for various sample sizes and AQLs

Table F.1 – Acceptance numbers – Attribute tests

Number of lamps inspected	Acceptance number (permitted number of non-conformities shown in manufacturer's records) for various AQLs				
	AQL = 0,25 %	AQL = 0,4 %	AQL = 0,65 %	AQL = 1,5 %	AQL = 2,5 %
32				1	2
50				2	3
80			1	3	5
125			2	5	7
200			3	7	10
315	2	3	5	10	14
500	3	5	7	14	21
800	5	7	10	21	
1 250	7	10	14		
etc.					

Table F.2 – Acceptance number: AQL = 0,25 %

Part 1

Number of lamps in manufacturer's records	Acceptance number
315	2
316 to 500	3
501 to 635	4
636 to 800	5
801 to 1 040	6
1 041 to 1 250	7
1 251 to 1 500	8
1 501 to 1 750	9
1 751 to 2 000	10

Part 2

Number of lamps in manufacturer's records	Acceptance number as percentage of lamps in records
2 001	0,485
2 200	0,48
2 600	0,46
3 300	0,44
4 200	0,42
5 400	0,40
7 200	0,38
10 000	0,36

Copyright National Electrical Manufacturers Association
Provided by IHS under license with NEMA
No reproduction or networking permitted without license from IHS
Not for Resale

Table F.3 – Acceptance numbers: AQL = 0,4 %

Part 1

Number of lamps in manufacturer's records	Acceptance number
315	3
316 to 400	4
401 to 500	5
501 to 650	6
651 to 800	7
801 to 950	8
951 to 1 100	9
1 101 to 1 250	10
1 251 to 1 400	11
1 401 to 1 600	12
1 601 to 1 800	13
1 801 to 2 000	14

Part 2

Number of lamps in manufacturer's records	Acceptance number as percentage of lamps in records
2 001	0,73
2 150	0,72
2 400	0,70
2 750	0,68
3 250	0,66
3 750	0,64
4 500	0,62
5 400	0,60
6 700	0,58
8 500	0,56
11 000	0,54
15 000	0,52
22 000	0,50
33 500	0,48
60 000	0,46
130 000	0,44
540 000	0,42
1 000 000	0,41

Copyright National Electrical Manufacturers Association
Provided by IHS under license with NEMA
No reproduction or networking permitted without license from IHS
Not for Resale

Table F.4 – Acceptance numbers: AQL = 0,65 %

Part 1

Number of lamps in manufacturer's records	Acceptance number
80	1
81 to 125	2
126 to 200	3
201 to 260	4
261 to 315	5
316 to 400	6
401 to 500	7
501 to 600	8
601 to 700	9
701 to 800	10
801 to 920	11
921 to 1 040	12
1 041 to 1 140	13
1 141 to 1 250	14
1 251 to 1 360	15
1 361 to 1 460	16
1 461 to 1 570	17
1 571 to 1 680	18
1 681 to 1 780	19
1 781 to 1 890	20
1 891 to 2 000	21

Part 2

Number of lamps in manufacturer's records	Acceptance number as percentage of lamps in records
2 001	1,03
2 100	1,02
2 400	1,00
2 750	0,98
3 150	0,96
3 550	0,94
4 100	0,92
4 800	0,90
5 700	0,88
6 800	0,86
8 200	0,84
10 000	0,82
13 000	0,80
17 500	0,78
24 500	0,76
39 000	0,74
69 000	0,72
145 000	0,70
305 000	0,68
1 000 000	0,67

Copyright National Electrical Manufacturers Association
Provided by IHS under license with NEMA
No reproduction or networking permitted without license from IHS
Not for Resale

Table F.5 – Acceptance numbers: AQL = 1,5 %

Part 1

Number of lamps in manufacturer's records	Acceptance number
32	1
33 to 50	2
51 to 80	3
81 to 110	4
111 to 125	5
126 to 165	6
166 to 200	7
201 to 240	8
241 to 285	9
286 to 315	10
316 to 360	11
361 to 410	12
411 to 460	13
461 to 500	14
501 to 545	15
546 to 585	16
586 to 630	17
631 to 670	18
671 to 710	19
711 to 755	20
756 to 800	21
801 to 850	22
851 to 915	23
916 to 990	24

Part 2

Number of lamps in manufacturer's records	Acceptance number as percentage of lamps in records
991	2,40
1 150	2,35
1 300	2,30
1 450	2,25
1 700	2,20
2 000	2,15
2 400	2,10
2 900	2,05
3 500	2,00
4 350	1,95
5 400	1,90
8 000	1,85
9 400	1,80
13 500	1,75
21 000	1,70
38 000	1,65
86 000	1,60
310 000	1,55
1 000 000	1,53

Copyright National Electrical Manufacturers Association
Provided by IHS under license with NEMA
No reproduction or networking permitted without license from IHS
Not for Resale

Table F.6 – Acceptance numbers: AQL = 2,5 %

Part 1

Number of lamps in manufacturer's records	Acceptance number
32	2
33 to 50	3
51 to 65	4
66 to 80	5
81 to 100	6
101 to 125	7
126 to 145	8
146 to 170	9
171 to 200	10
201 to 225	11
226 to 255	12
256 to 285	13
286 to 315	14
316 to 335	15
336 to 360	16
361 to 390	17
391 to 420	18
421 to 445	19
446 to 475	20
476 to 500	21
501 to 535	22
536 to 560	23
561 to 590	24
591 to 620	25
621 to 650	26
651 to 680	27
681 to 710	28
711 to 745	29
746 to 775	30
776 to 805	31
806 to 845	32
846 to 880	33
881 to 915	34
916 to 955	35
956 to 1 000	36

Part 2

Number of lamps in manufacturer's records	Acceptance number as percentage of lamps in records
1 001	3,65
1 075	3,60
1 150	3,55
1 250	3,50
1 350	3,45
1 525	3,40
1 700	3,35
1 925	3,30
2 200	3,25
2 525	3,20
2 950	3,15
3 600	3,10
4 250	3,05
5 250	3,00
6 400	2,95
8 200	2,90
11 000	2,85
15 500	2,80
22 000	2,75
34 000	2,70
60 000	2,65
110 000	2,60
500 000	2,55
1 000 000	2,54

Copyright National Electrical Manufacturers Association
Provided by IHS under license with NEMA
No reproduction or networking permitted without license from IHS
Not for Resale

For larger samplings of test data than those given in the relevant tables, the acceptance number shall be obtained from the following formula:

$$Q_L = \frac{AN}{100} + 2{,}33\sqrt{\frac{AN}{100}}$$

where

N is the number of lamps in records;

A is the appropriate percentage;

Q_L is the acceptance number.

If a fraction results, it shall be rounded to the nearest whole number.

Copyright National Electrical Manufacturers Association
Provided by IHS under license with NEMA
No reproduction or networking permitted without license from IHS
Not for Resale

Annex G
(normative)

Acceptance criteria – Continuously variable results

The object of this annex is to determine acceptability of manufacturer's records of torsion strength in accordance with annex C where torque values are recorded on a continuously variable basis and where the AQL is 0,65 %.

Determination of acceptability

The acceptability criterion is based on estimates of the location and variability of the distributed measurements of lamps in the manufacturer's records in relation to the specified limit, i.e. in terms of the mean and standard deviation.

The probability that a lot, whose quality is precisely at the AQL, will be accepted increases with the sample size and follows a similar, but not identical, sliding scale to that used in the attribute qualifying limits.

Q_L is a quality parameter which indicates whether the distribution of individual results in a sample reflects an unacceptable number of defectives in a batch, and it is calculated as follows:

$$Q_L = \frac{\overline{X} - L}{S}$$

where

$\overline{X}$ is the mean value of the results in the manufacturer's records;

L is the specified lower limit;

S is the estimate from the manufacturer's records of the standard deviation and where S is computed as follows:

$$S = \sqrt{\frac{\Sigma_{i=1}^{n}\left(x_i - \overline{X}\right)^2}{n-1}}$$

where

x_i is the value of individual results;

n is the number of results;

The test is passed if Q_L is greater than or equal to k;

the test is not passed if Q_L is less than k, k being the value known as the acceptability constant and found by reference to table G.1.

Where the number of results in the manufacturer's records exceeds 200, the value of k for 200 shall be used. Where the exact number of results is not shown, the next lowest value shall be used.

The statistical basis of these clauses assumes that the distribution of results is normal or nearly so. Tests for normality may be made with the proper use of probability paper plots.

--`,,`-`-`,,`,,`,`,,`---

Copyright National Electrical Manufacturers Association
Provided by IHS under license with NEMA
No reproduction or networking permitted without license from IHS Not for Resale

Another problem which can arise is that the results may be truncated by the upper limit of the measuring capability. Providing the equipment is of good design and capable of measurements to at least three times the specified limit, the existence of the problem will imply a higher probability of good quality. A specific test for compliance may, however, be made by determining $\overline{X}$ and S by the probability paper technique and then following the calculations of Q_L in the usual way.

NOTE – The acceptance criteria in this annex are consistent with ISO 3951.

Table G.1 – Acceptability constant

Number of results in manufacturer's records	Acceptability constant k
20	1,96
25	1,98
35	2,03
50	2,08
75	2,12
100	2,14
150	2,18
200	2,18

Copyright National Electrical Manufacturers Association
Provided by IHS under license with NEMA
No reproduction or networking permitted without license from IHS
Not for Resale

Annex H
(normative)

Induced-failure test – Grouping, sampling and compliance

This test is a design test, that shall be made in the case of a design change.

H.1 Grouping

Classes of lamps are generally assessed separately, but:

a) classes which differ only in respect to the cap may be grouped as follows:

   B15 and B22

   E14 and E27

   E12, E17 and E26;

b) classes which differ only in having different finishes, for example white, coloured, mirrored may be grouped provided that the tests are carried out on those classes having an extra coating rather than on clear or frosted lamps. If there are lamps with an inside coating these should be chosen in preference to lamps with an outside coating.

H.2 Sampling

H.2.1 If only one class (or classes as grouped in H.1) is to be assessed, then a sample of 125 is taken; a second sample of 125 may be necessary depending on the result (see H.4.2).

H.2.2 If several classes (or grouped classes) are to be tested, then the number of samples per class may be reduced to not less than 50 providing that the total sample for all classes is at least 1 000, and the initial samples from each class are approximately equal.

H.2.3 In the case where burn-out in the induced-failure test does not always occur, a definitive result may be ascribed providing that in each class tested not less than 25 lamps burn out. If less than 25 lamps burn out, one of the two procedures below shall be applied.

H.2.3.1 The number of lamps submitted to the test shall be increased until 25 have burnt out. If this still fails to achieve the requisite number of burn-outs, a quantity of lamps sufficient to make up the number to 25 shall be subjected to the procedures of D.3 and D.4. A definite result may be ascribed providing, in each class tested, not less than 25 lamps pass the induced-failure test.

H.2.3.2 Alternatively, a sufficient number of lamps to complete the minimum number specified in H.2.3 shall be subjected to the procedures of D.3 and D.4. A definite result may be ascribed providing, in each class tested, not less than 25 lamps pass the induced-failure test.

H.3 Alternative test data

H.3.1 Provided the requirements of H.1, H.2.1 and H.2.2 are met, it shall be permissible to use, for the mandatory design test, the procedure in annex E in place of that in annex D.

Copyright National Electrical Manufacturers Association
Provided by IHS under license with NEMA
No reproduction or networking permitted without license from IHS Not for Resale

H.3.2 Provided that there have been no design changes, operation-to-failure data accumulated over any period under the conditions of annex E may be used wholly or partly in place of part of the sample requirements of H.2.1 and H.2.2 on a one-for-one basis.

H.4 Conditions of compliance

H.4.1 If one class only is being assessed (see H.2.1) the result of the first 125 lamps is considered and action taken as follows:

– zero non-conformity* :	pass;
– two (or more) non-conformities:	reject;
– one non-conformity:	take a second sample of 125; the test is passed only if there are no more non-conformities.

If a second sample is taken, the requirements of H.2.3 apply separately to the second sample.

H.4.2 If a reduced sample size is used in accordance with H.2.2, assessment is made on the total of all classes taken together but if, in any individual class (or grouped class), there are:

a) two or more non-conformities:

   all classes submitted are deemed to have failed;

b) one non-conformity:

   additional samples of this class are taken and, provided there are no more non-conformities by the time the total sample for the class has reached 250, the class has passed.

When all classes have been assessed individually, the total number of lamps in all classes, taken together, is referred to table 6. All classes are deemed to have passed if the number of non-conformities does not exceed the corresponding acceptance number or qualifying percentage limit.

When a small number of classes is being assessed, such that the sample size is not reduced, they are treated individually in accordance with H.4.1.

H.5 Examples to illustrate applications of the induced-failure test sampling

H.5.1 A manufacturer wishes to assess the following classes:

–	200 V – 250 V	40 W	SC	frosted;
–	200 V – 250 V	40 W	CC	inside white;
–	200 V – 250 V	40 W	CC	red, blue, green and yellow (the colours being external glazes);
–	200 V – 250 V	60 W	CC	frosted;
–	200 V – 250 V	60 W	CC	bowl mirror.

* Non-conformity is defined in D.4.

Copyright National Electrical Manufacturers Association
Provided by IHS under license with NEMA
No reproduction or networking permitted without license from IHS Not for Resale

He takes:

– 125 samples of 40 W SC frosted;
– 125 samples of 40 W CC inside white;
– 125 samples of 60 W CC bowl mirror.

(In each case a further sample of 125 may be necessary if one non-conformity occurs.)

H.5.2 A manufacturer wishes to assess 11 classes. He takes 91 lamps from each class (total sample: 1 001).

H.5.3 A manufacturer wishes to assess 25 classes. Initially he takes 50 lamps per class (total sample: 1 250).

H.5.4 The testing given in example H.5.2 proceeds and in one class out of the 91 lamps only 27 burn out without any bulb failing to comply with D.4. As the number of burn-outs exceeds 25 and there are no non-conformities in the 91 lamps tested, the test on this class is passed.

H.5.5 Again, taking the example H.5.2, in another class only 13 burn out.

The manufacturer may then take a further sample to try and achieve 25 burn-outs. This could involve possibly another 85 lamps or he could test 12 lamps in accordance with H.2.3.2 and D.4 to obtain a result for this class.

H.5.6 In example H.5.2, 91 lamps were taken and in one class 39 burn out, but one failed to comply with D.4. A further sample of 159 is taken. This time 70 lamps burn out but none fails to comply with D.4. 250 lamps of this class have now been tested with 109 burn-outs and one failing to comply with D.4. This meets the individual class requirement, but the results of all 11 classes shall be summarized and applied to table 6.

H.5.7 In example H.5.1:

The test on 125, 40 W inside white lamps gives 103 burn-outs and one non-conformity. A further 125 lamps are taken with 87 burn-outs and one more non-conformity. The result is assessed on the basis of 250 test results and two non-conformities. Thus, all the manufacturer's 200 V to 250 V, 40 W, CC, inside white and colours are deemed not to be in compliance.

H.5.8 In example H.5.1:

The test on 125, 60 W bowl mirror lamps gives seven burn-outs with no non-conformities; 18 lamps are put on life test and one fails to comply with D.4. A further sample of 125 is taken. On the induced-failure test, 11 burn-outs occur with no non-conformities. 14 lamps are then tested in accordance with H.2.3.2 and D.4, none of which fail to comply with D.4 at the end of life.

The result is now one non-conformity in 250 lamps tested and is, therefore, a pass.

--`,,`,,`-`-`,,`,,`,`,,`---

Copyright National Electrical Manufacturers Association
Provided by IHS under license with NEMA
No reproduction or networking permitted without license from IHS Not for Resale

Annex J
(normative)

Method of measuring mains impedance

The method shown below enables mains impedance to be measured with sufficient accuracy to show that test conditions comply with the requirements of D.2 and E.4.

This method uses currents that occur under the conditions of normal operation whilst maintaining the mains voltage.

On the principle of "ΔU measurements" a measurable potential difference U is produced by large resistive and inductive loads. Figure J.1 shows the bridge circuit.

Terminals a and b of the bridge are the terminals of the mains where the impedance is to be found. The e.m.f. of the mains is E_m and its impedance $Z_m = R_m + jx_m$.

When either R_{21} or X_{22} has been switched into circuit, the bridge is balanced if closure of S does not alter voltage U_{ac}, i.e. $\Delta U = 0$.

The equilibrium conditions are:

$$R_m \cong \frac{R_{21}}{R_4} R_3 = R'_m \text{ for the resistive bridge;}$$

$$X_m \cong \frac{X_{22}}{R_4} R_3 = X'_m \text{ for the inductive bridge.}$$

R_{21} and X_{22} are loads that produce a current of approximately 10 A.

The fixed resistor R_4 and resistance box R_3 (adjustable in three decades) together constitute the high resistance branch. For switch S, a triac may be used which switches at the current zero point.

The equipment to measure ΔU shall have a sensitivity sufficient to identify the null point. In determining R_m and X_m slight errors will occur due to X_m and (R_m + R_{22}), respectively. R_{22} is the relatively low but nevertheless unavoidable resistance of load X_{22}. The error present in finding R_m will be negligible.

The error in determining X_m will usually be a few per cent and therefore negligible. If it exceeds 10 % a correction should be made in accordance with the normal rules of electrical engineering.

Copyright National Electrical Manufacturers Association
Provided by IHS under license with NEMA
No reproduction or networking permitted without license from IHS
Not for Resale

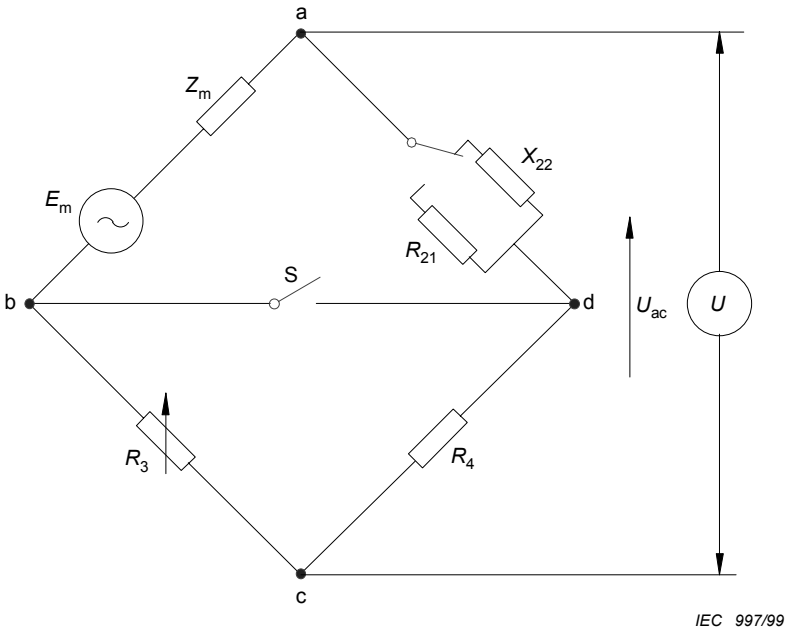

NOTE – A suitable circuit is described in “Messgerät zur Bestimmung des komplexen Innenwiderstandes in Niederspannungsnetzen” (An instrument for the determination of complex source impedance in low-voltage mains supplies) by R. Gretsch, *Elektrotech. Zeitschrift (ETZ)* A, vol. 91, No. 9, pp. 526-7 (1970).

Figure J.1 – Bridge circuit

Copyright National Electrical Manufacturers Association
Provided by IHS under license with NEMA
No reproduction or networking permitted without license from IHS
Not for Resale

Annex K
(informative)

Information for luminaire design

K.1 Guidelines for safe lamp operation

To ensure safe lamp operation, it is essential to observe the following recommendations.

K.2 Maximum cap temperature

Luminaires should be so designed that the lamp cap temperature does not exceed the maximum cap temperature.

Also, it is necessary to give due consideration to the temperature rise of the lamp cap as specified in table 2.

To ensure that the thermal endurance of lamp materials is not exceeded, lamps should be operated at cap temperatures that do not exceed the appropriate following limits:

a) the maximum cap temperature, in relation to cap type as specified in table K.1; or

b) for certain classes of lamps where 210 °C is specified in table K.1, the manufacturer may choose a design which can withstand a maximum cap temperature of 165 °C provided that the rated wattage of the lamp is 15 W or lower and that the lamp is not a reflector or bowl mirror lamp.

NOTE – For special applications in North America, maximum cap temperatures lower than those shown in table K.1 may be assigned by the lamp manufacturer. When such a lower temperature lamp class is established, the manufacturer is encouraged to:

– propose special limits for this standard;

– alert luminaire manufacturers.

Table K.1 – Maximum cap temperatures

Cap type	Temperature °C
B15d	210
B22d	210
E12	165
E14	210
E17	165
E26/24	170
E26/25	165
E26/50×39	*
E27	210
E27/51×39 PAR	250
E27/51×39 PAR, cool beam	300*
* Under consideration.	

Copyright National Electrical Manufacturers Association
Provided by IHS under license with NEMA
No reproduction or networking permitted without license from IHS Not for Resale

K.3 Method of measurement

The cap temperature shall be measured in accordance with the relevant test in IEC 60598-1 by means of a suitable thermocouple system with the lamp installed in its intended lampholder/ luminaire.

There are two methods of measuring cap temperature.

a) Method 1

   The hot junction of the thermocouple is located on the cap shell at a distance of no more than 2 mm from the cap to the bulb junction.

b) Method 2

   This method is used in case of doubt.

The hot junction of the thermocouple is located in the cement material, after a hole has been drilled in the cap at a distance of 1 mm to 2 mm from the cap to bulb junction. The most onerous location on the circumference of the cap is chosen (generally as close as possible to the centre position of the filament).

NOTE – For lamp types with mechanically locked caps, there is no need to drill a hole to reach the cement. The thermocouple should be affixed to the cap at a distance of 1 mm to 2 mm from the cap to bulb junction (on skirted caps, this refers to the skirt-to-bulb junction) at the most onerous location.

The temperature measured after thermal stabilization should not exceed the value which corresponds to the maximum cap temperature as given in table K.1.

The temperature measured after thermal stabilization may be 5 °C higher than the corresponding maximum cap temperature given in table K.1, because of the effects of radiation from the lamp on the hot junction of the thermocouple.

CAUTION: Avoid cap shells that are electrically live when making cap temperature measurements.

K.4 Special luminaires

Dichroic reflectorized and bowl mirror lamps marked in accordance with 2.2.2 are applied in special luminaires.

Such lamps are unsuitable for use in ordinary luminaires which accept similarly shaped lamps because overheating could occur. Associated luminaire marking requirements appear in IEC 60598-1.

K.5 Lamp operating position

Certain lamps, such as candle and round bulb lamps, are restricted as to operating position and are marked in accordance with 2.2.3. Such lamps should not be applied in luminaires in the cap-up position.

———————

Copyright National Electrical Manufacturers Association
Provided by IHS under license with NEMA
No reproduction or networking permitted without license from IHS Not for Resale