

ANSI C78.43-2005

Revision of ANSI C78.43-2004

American National Standard

for electric lamps—

Single-Ended Metal Halide Lamps

Copyright National Electrical Manufacturers Association
Provided by IHS under license with NEMA
No reproduction or networking permitted without license from IHS
Not for Resale

Copyright National Electrical Manufacturers Association
Provided by IHS under license with NEMA
No reproduction or networking permitted without license from IHS
Not for Resale

ANSI C78.43-2005
Revision of ANSI C78.43-2004

American National Standard

Approved: December 22, 2005 Secretariat: ANSLG – National Electrical Manufacturers Association

for electric lamps:

Single-Ended Metal Halide Lamps

An American National Standard implies a consensus of those substantially concerned with its scope and provisions. It is intended as a guide to aid the manufacturer, the consumer, and the general public. The existence of an American National Standard does not in any respect preclude anyone, whether he has approved the standard or not, from manufacturing, marketing, purchasing, or using products, processes, or procedures not conforming to the standards. Users are cautioned to obtain the latest editions.
The American National Standards Institute does not develop standards and will in no circumstances give an interpretation of any American National Standard. Moreover, no person shall have the right or authority to issue an interpretation of an American National Standard in the name of the American National Standards Institute.
CAUTION NOTICE: This American National Standard may be revised or withdrawn at any time. The procedures of the American National Standards Institute require that action be taken periodically to reaffirm, revise, or withdraw this standard. Purchasers of American National Standards may receive current information on all standards by calling or writing the American National Standards Institute.

Copyright 2005 © American National Standard Lighting Group in affiliation with NEMA

Copyright National Electrical Manufacturers Association
Provided by IHS under license with NEMA
No reproduction or networking permitted without license from IHS Not for Resale

American National Standard

Approval of an American National Standard requires verification by ANSI that the requirements for due process, consensus, and other criteria for approval have been met by the standards developer. An American National Standard implies a concensus of those substantially concerned with its scope and provisions. Consensus is established when, in the judgment of the ANSI Board of Standards Review, substantial agreement has been reached by directly and materially affected interests. Substantial agreement means much more than a simple majority, but not necessarily unanimity. Consensus requires that all views and objections be considered, and that a concerted effort be made toward their resolution. The existence of an American National Standard does not in any respect preclude anyone from manufacturing, marketing, purchasing, or using products, processes, or procedures not conforming to the standard. It is intended as a guide to aid the manufacturer, the consumer, and the general public.

The American National Standards Institute does not develop standards and will in no circumstances give an interpretation of any American National Standard. Moreover, no person shall have the right or authority to issue an interpretation of an American National Standard in the name of the American National Standards Institute. Requests for interpretations should be addressed to the secretariat or sponsor whose name appears on the title page of this standard.

CAUTION NOTICE: This American National Standard may be revised or withdrawn at any time. The procedures of the American National Standards Institute require that action be taken periodically to reaffirm, revise, or withdraw this standard. Purchasers of American National Standards may receive current information on all standards by calling or writing the American National Standards Institute.

Printed and distributed by:
Information Handling Services/Global Engineering Documents
15 Inverness Way East, Englewood, CO 80112-5776
Under contract with National Electrical Manufacturers Association

Copyright © 2005 by American National Standard Lighting Group
In affiliation with National Electrical Manufacturers Association
All rights reserved.

No part of this publication may be reproduced in any
form, in an electronic retrieval system or otherwise,
without prior written permission of the publisher.
Printed in the United States of America

Copyright National Electrical Manufacturers Association
Provided by IHS under license with NEMA
No reproduction or networking permitted without license from IHS Not for Resale

Foreword (This foreword is not part of American National Standard C78.43-2005).

Suggestions for improvement of this standard should be submitted to the Secretariat C78 American National Standard Lighting Group in affiliation with the National Electrical Manufacturers Association, 1300 North 17th Street, Suite 1752, Rosslyn, VA 22209.

This standard was processed and approved by the Accredited Standards Committee on Electric Lamps, C78, and its Work Group C78 WG 04. Work Group approval of the standard does not necessarily imply that all Work Group members voted for that approval.

Amendment / Change	CDV	RV
Revision	CDV 78_4_4206	RV 78_4_4207

David Mullen, Chair, ASC 78
Selmar Dorsey, Vice-Chair, ASC 78
Elliot Wyner, Technical Coordinator
Randolph N. Roy, Committee Secretariat
Matthew C. Clark, Senior Coordinating Editor

Copyright National Electrical Manufacturers Association
Provided by IHS under license with NEMA
No reproduction or networking permitted without license from IHS Not for Resale

Contents

Organization of this standard…… 6

PART I General Requirements and Information

1 Scope…… 8
2 Normative references. …… 8
3 Definitions …… 9
4 Methods of measurement…… 9
5 Lamp specifications. …… 9
5.1 Lamp designations and description…… 9
5.2 Lamp physical characteristics……10
5.3 Operating requirements at 100 hours.. ……10
5.4 Lamp reignition voltage spike (Vrs) during warm-up …… 10
5.5 Lamp reignition voltage (Vr) during steady operation …… 10
5.6 Lamp starting voltage and warm-up requirements …… 10
5.7 Reference ballast characteristics……11
6 Information for ballast design…… 11
6.1 Requirements for lag ballast…… 11
6.2 Requirements for peak-lead ballasts …… 12
6.3 Ignitor requirements …… 12
6.4 Starting current requirements…… 12
6.5 Current crest factor…… 12
6.6 Maximum peak voltage across lamp terminals…… 12
6.7 Lamp operating wattage…… 13
7 Information for luminaire design …… 13
7.1 Lamp voltage rise limits…… 14
7.2 Lamp temperatures …… 14
7.3 Lamp operating position …… 14
7.4 End of life behavior…… ……14

Part II Maximum outline drawings

Figure #1 BD 17 (BD54), E17 (E54) for enclosed fixtures…… 16
Figure #2 BD 17 (BD54), E17 (E54) for open fixtures ……. 17
Figure #3 T4.5 (T14)…… 18
Figure #4 T6 (T19)…… 19
Figure #5 T15 (T48)…… 20
Figure #6 E18 (E57)…… 21
Figure #7 ED23.5 (ED75)…… 22
Figure #8 BT28 (BT90)…… 23
Figure #9 BT37 (BT118)…… 24
Figure #10 BT56 (BT180)…… 25
Figure #11 PAR20 (PAR63)…… 26
Figure #12 PAR30 (PAR95)…… 27
Figure #13 PAR38 (PAR121)…… 28

Copyright 2005 © American National Standard Lighting Group in affiliation with NEMA

Copyright National Electrical Manufacturers Association
Provided by IHS under license with NEMA
No reproduction or networking permitted without license from IHS
Not for Resale

PART III Single-Ended Lamp data sheets

39-watt, C130	31
50-watt, M110	34
70-watt, M98	37
100-watt, M90	40
150-watt, M102	43
150-watt, M107	46
175-watt, M57	49
175-watt, pulse-start, M152	52
250-watt, M58	55
250-watt, pulse-start, M153	58
320-watt, pulse-start, M154	61
350-watt, pulse-start, M131	64
360-watt, M165	67
400-watt, M59	71
400-watt, pulse-start, M155	74
750-watt, pulse-start, M149	77
1000-watt, M47	80
1000-watt, pulse-start, M141	83
1500-watt, M48	86
1650-watt, M112	89

Copyright 2005 © American National Standard Lighting Group in affiliation with NEMA

Copyright National Electrical Manufacturers Association
Provided by IHS under license with NEMA
No reproduction or networking permitted without license from IHS
Not for Resale

Organization of this standard

This standard has been arranged in three parts:

Part I covers general requirements and information. It provides normative references and offers brief explanations of the meaning or the application of some of the numerical data given on the individual lamp data sheets in Part III of this standard. It also provides requirements that are common to all metal halide lamp types.

Part II contains the maximum outline drawings of each lamp size.

Part III contains individual single-ended lamp data sheets that provide the specific lamp, ballast, and luminaire requirements of each of the standardized single-ended metal halide lamp types.

Copyright 2005 © American National Standard Lighting Group in affiliation with NEMA

Copyright National Electrical Manufacturers Association
Provided by IHS under license with NEMA
No reproduction or networking permitted without license from IHS
Not for Resale

This Page Intentionally Left Blank

Copyright 2005 © American National Standard Lighting Group in affiliation with NEMA

--`,,```,,,,````-`-`,,`,,`,`,,`---
Copyright National Electrical Manufacturers Association
Provided by IHS under license with NEMA
No reproduction or networking permitted without license from IHS
Not for Resale

1 Scope

This standard sets forth the physical and electrical requirements for single-ended metal halide lamps operated on 60 Hz ballasts to ensure interchangeability and safety. The data given also provides the basis for the electrical requirements for ballasts and ignitors, as well as the lamp-related requirements for luminaires. This standard includes lamps whose arc tubes are made of quartz or ceramic materials. Luminous flux and lamp color are not part of this standard.

2 Normative references

The following standards contain provisions which, through reference in this text, constitute provisions of this American National Standard. At the time of publication, the editions indicated were valid. All standards are subject to revision, and parties to agreements based on this American National Standard are encouraged to investigate the possibility of applying the most recent editions of the standards indicated below.

ANSI C78.30-1997, *Procedure for Use in Preparation of Lamp Space Drawings*
ANSI C78.379-1994, C*lassification of Beam Patterns of Reflector Lamps*
ANSI C78.380-2005, *Electric Lamps - High-intensity Discharge Lamps - Method of Designation*
ANSI C78.389-2004, *Electric Lamps – HID lamps - Methods of Measuring Characteristics*
ANSI C79.1-2002, *Nomenclature for Glass Bulbs Intended for Use with Electric Lamps*
ANSI C81.61-2005, *Electric Lamp Bases*
ANSI C81.62-2005, *Lampholders for Electric Lamps*
ANSI C81.63-2005, *Gauges for Electric Lamp Bases and Lampholders*
ANSI C81.64-2005, *Guidelines and General Information for Electric Lamp Bases, Lampholders, and Gauges*
ANSI C82.4-2002, *Ballasts for High-intensity Discharge and Low-pressure Sodium Lamps (multiple supply type)*
ANSI C82.5-1990, *Reference Ballasts for High-intensity Discharge Lamps*
ANSI C82.6-2005, *Ballasts for High-intensity Discharge Lamps - Methods of Measurement*
ANSI C82.9-1996, *Definitions for High-intensity Discharge and Low-pressure Sodium Lamps, Ballasts, and Transformers*
ANSI/UL1598-2004, *Standard for Safety Luminaires*
ANSI/IEC C78.62035-2004, *Discharge Lamps (Excluding Fluorescent Lamps)- Safety Specifications*

Copyright 2005 © American National Standard Lighting Group in affiliation with NEMA

Copyright National Electrical Manufacturers Association
Provided by IHS under license with NEMA
No reproduction or networking permitted without license from IHS
Not for Resale

3 Definitions

Definitions of single-ended metal halide lamp terms used in this standard can be found in ANSI C82.9.

4 Methods of measurement

Measurement of the electrical characteristics and the bulb and base temperatures of metal halide lamps shall be made in accordance with ANSI C78.389.

5 Lamp Specifications (Data Sheets, Section 1)

Lamps must meet the requirements contained within ANSI/IEC C78.62035 as well as the specifications contained in this standard.

5.1 Lamp Designations and Descriptions

5.1.1 Lamp Designations

Metal halide designations are assigned in accordance with ANSI C78.380. Note that the number (two or three digits) following the first upper case letter in the designation, indicates a unique set of electrical characteristics. Following the lamp number is a slash followed by a luminaire characteristic letter. Operating position limitations are as indicated on the lamp marking.

5.1.2 Bulb Designation

Bulb designations are defined in ANSI C79.1. Due to the long established practice of designating the bulb diameter in eighth-of-an-inch units, this standard maintains that practice. The customary designation is used with the metric designation following in parenthesis. In Part III of this standard, an "E" bulb designation includes E-, ED-, and ET-bulb shapes; similarly, a "B" bulb designation includes B-, BD-, and BT-bulb shapes.

Note that the bulb sizes listed on the lamp data sheets are intended to correspond with the common sizes listed in ANSI C79.1. The bulb designation may not correspond directly with the actual nominal diameter listed under the “lamp physical characteristics”.

5.1.3 Maximum Outline Drawings

The maximum outline drawings in Part II of this standard show for each bulb-base-MOL category the maximum limits of the space that may be occupied by any part of the bulb, assuming a fixed base position. They do not define the actual bulb shape. The limits shown take into account the maximum bulb dimensions and the possible eccentricity of the bulb with respect to the base. The dashed lines indicate typical bulb shapes. A lamp with its base in a fixed position shall remain within the limits of the outline in the relevant maximum outline drawing. Maximum outline drawings are produced in accordance with ANSI C78.30.

Copyright 2005 © American National Standard Lighting Group in affiliation with NEMA

Copyright National Electrical Manufacturers Association
Provided by IHS under license with NEMA
No reproduction or networking permitted without license from IHS
Not for Resale

5.1.4 Base Specifications

Requirements for electrical lamp bases are specified in ANSI C81.61.

EX39 bases shall only be used on lamps with luminaire code “O”.

5.2 Lamp Physical Characteristics

5.2.1 Physical and Dimensional Requirements

Lamps shall satisfy the requirements on the relevant lamp data sheet. The critical lamp dimensions are given in SI units, with the English unit equivalent in parentheses.

5.2.2 Luminaire and Temperature Requirements

The luminaire characteristic (open, enclosed, etc), maximum permissible bulb temperature, and maximum permissible base temperature for each lamp type are listed in the individual lamp data sheets. Concerning the maximum temperature limits for the lamp bulb and base, note that luminaire design must be such that these maximum temperatures are not exceeded.

5.3 Operating Requirements at 100 hours

The lamp operating characteristics of 1.3 in the data sheets apply to bare lamps operating on a reference ballast at an ambient temperature of 25ºC ± 5ºC (77ºF ± 9ºF). These requirements apply to new lamps that have operated for 100 hours. The lamps shall be operated vertically base up, unless otherwise designated by the lamp manufacturer. See ANSI C78.389.

5.4 Lamp Reignition Voltage Spike (Vrs)

The reignition voltage spike during warm-up for any lamp (See ANSI C78.387) shall not exceed throughout life the values listed when using the electrical conditions that are defined for the individual lamps. The reactor ballast used shall have a power factor of 0.075 $\pm$ 0.005 and meet the linearity specifications of ANSI C82.5.

5.5 Lamp Reignition Voltage (Vr)

The reignition voltage for any lamp shall not exceed the value provided for the individual lamps throughout life when operated on its reference ballast in accordance with ANSI C78.389.

5.6 Lamp Starting and Warm-up requirements

See ANSI C78.389 for measurement procedures. Single-ended lamps shall be measured in the vertical, base-up position unless otherwise designated by the lamp manufacturer.

5.6.1 Starting Voltage

Lamps shall start within the time period specified at the ambient temperatures indicated when the sine-wave open-circuit test voltages from the data sheet of Part III are applied. Lamps shall meet these requirements throughout their lifetime. For lamps

Copyright National Electrical Manufacturers Association
Provided by IHS under license with NEMA
No reproduction or networking permitted without license from IHS Not for Resale

requiring external ignitors, the pulse characteristics are measured at the terminals of the lampholder. For screw-based lamps with an E26 or E39 base, the pulse is applied to the center terminal of the lamp base with the shell grounded. For pin-based (G8.5 and G12) lamps, the pulse shall be applied to either base contact.

5.6.2 Warm-up Time

A bare lamp operating in still air at an ambient temperature of 25ºC ± 5ºC (77ºF ± 9ºF) under the conditions described in ANSI C78.389 shall reach the minimum voltage within the time period specified on the relevant lamp data sheet.

5.7 Reference Ballast Requirements

The reference ballast provides a standard means of comparison and is used to ensure reproducible results when measuring lamp characteristics. Reference ballasts for metal halide lamps are series reactor types, and do not include any step-up transformation. Only reference ballasts for 60 Hz operation, with a power factor of 0.075 ± 0.005, shall be used. The general requirements for reference ballasts are outlined in ANSI C82.5.

The specific values for each reference ballast type are given on the relevant lamp data sheet. A momentary higher open-circuit voltage, auxiliary starting circuit, or Tesla coil may be necessary to start the lamp where an auxiliary starting circuit is not provided.

6 Information for Ballast Design (Data Sheets, Section 2)

A ballast shall meet the following requirements throughout its supply voltage range (the range shall not be less than 95% to 105% of its rated voltage). These requirements apply to ballasts integral-to-luminaire as well as remotely connected ignitors. Capacitive loading across the lampholder terminals may be necessary to simulate remote mounting circuit characteristics. For screw-based lamps requiring a starting pulse, the pulse application shall be to the eyelet or center lamp holder terminal.

For additional ballast requirements see ANSI C82.4, for Methods of Measurement see C82.6, and for Definitions see C82.9.

6.1 Requirements for Lag Ballasts

A lag ballast shall meet the voltage requirements in order to reliably start and sustain lamps within the time periods and ambient temperatures indicated.

6.1.1 Without Auxiliary Starting Circuit

A lag ballast shall supply the minimum open-circuit voltage specified on the relevant lamp data sheet.

6.1.2 With Auxiliary Starting Circuits

A lag ballast shall supply the minimum open-circuit and ignitor pulse voltages specified on the relevant lamp data sheet.

Copyright 2005 © American National Standard Lighting Group in affiliation with NEMA

Copyright National Electrical Manufacturers Association
Provided by IHS under license with NEMA
No reproduction or networking permitted without license from IHS
Not for Resale

6.2 Requirements for Peak-Lead Ballasts

A peak-lead ballast shall meet the voltage requirements in order to reliably start and sustain lamps within the time periods and ambient temperatures indicated.

6.2.1 Without Auxiliary Starting Circuits

A peak-lead ballast shall supply the minimum open-circuit voltage specified on the relevant lamp data sheet.

6.2.2 With Auxiliary Starting Circuits

A peak-lead ballast shall supply the minimum open-circuit and ignitor pulse voltages specified on the relevant lamp data sheet.

6.2.3 Current Wave-shape Characteristics

Current wave-shape characteristics required to sustain the lamp during starting and steady state operation are specified for peak lead ballasts in the applicable lamp data sheets. Measurements are with a “stiff” supply that regulates voltage within 0.5%. Current slope di/dt is measured within a 100-microsecond window centered at zero crossing.

6.2.4 Minimum Sustaining Voltage (Vss)

A ballast at minimum rated line input shall meet the minimum sustaining voltage as specified in the applicable lamp data sheet in order to sustain the lamp during starting and steady state operation. Measurements are with a “stiff” supply that regulates voltage within 0.5%.

6.3 Ignitor Requirements

The starting pulse (Defined in C82.9) shall be applied to the center terminal of the lamp base with the wiring between ballast and lampholder (or its equivalent capacitance) connected. See the ignitor manufacturer's literature for the appropriate value of equivalent capacitance. The pulse, measured at the lampholder terminals across a dummy lamp load of 20 pF, shall have the characteristics provided in the data sheets.

6.4 Starting Current Requirements

Minimum and maximum starting currents are provided on the lamp data sheets. Starting current shall be measured 5 to 15 seconds after the lamp arc has started.

6.5 Current Crest Factor

The lamp current crest factor, during warm-up and operation of a reference lamp shall not exceed the value indicated on the relevant lamp data sheet.

6.6 Maximum Voltage Across Lamp Terminals

A ballast shall not provide to the lamp terminals a voltage in excess of the values specified on the relevant lamp data sheet. RMS and peak voltages are measured without the ignitor.

Copyright 2005 © American National Standard Lighting Group in affiliation with NEMA

Copyright National Electrical Manufacturers Association
Provided by IHS under license with NEMA
No reproduction or networking permitted without license from IHS
Not for Resale

6.7 Lamp Operating Wattage

The operating wattage of a bare lamp, measured in its designated operating position on a ballast throughout its range of rated supply voltages in a still air ambient of 25°C ± 5°C (77°F ± 9°F), shall remain within the wattage limits of the relevant lamp data sheet. Lamps shall operate within these limits throughout the full range of lamp voltage tolerance.

To meet these limits, a ballast at 100% of the rated supply voltage shall operate a reference lamp within ± 5% of the wattage delivered to the same lamp in the same position by a reference ballast. Also the ballast, throughout the supply voltage range for which it was intended, shall operate a reference lamp within ± 15% of the wattage delivered to that reference lamp by a reference ballast at its rated voltage.

***NOTE:** Specific wattage limits are based on normal tolerance distributions of lamp voltage, ballast adjustment, and supply voltage. If these tolerances are extreme and in the same direction, the specified wattage limits could be exceeded.

For additional limits of ballast performance, see ANSI C82.4.

6.7.1 Minimum Lamp Operating Wattage

Operation of metal halide lamps below the limits of this standard will lower lamp efficacy and may result in color shift, arc instability, flicker and reduced lamp life. The lamp manufacturer shall be consulted before operating metal halide lamps at reduced wattage or with dimming circuits.

7 Information for Luminaire Design (Data Sheets, Section 3)

CAUTION: To insure correct thermal operation, UV protection and non-passive failure protection, the luminaire shall be designed in accordance with lamp manufacturers' recommendations for use and application.

Metal-halide lamps are constructed of a glass or quartz envelope with an internal arc tube. These arc tubes operate under high pressure (typically 5 atmospheres or greater) and temperature (typically 900°C or greater). The arc tube may unexpectedly rupture due to internal causes or external factors. When this occurs, the glass or quartz envelope surrounding the arc tube may break and extremely hot particles from the arc tube and fragments from the envelope may be discharged into the fixture enclosure and possibly the surrounding environment, thereby creating a risk of personal injury or other hazard.

Certain metal halide lamps are designed to contain all particles within the outer bulb should an arc tube rupture occur. Such lamps that have passed containment testing, per ANSI C78.389 Annex A for quartz arc tubes and per an annex B for ceramic arc tubes, may be labeled with a luminaire characteristic letter “O”, e.g. M59/O. Luminaire characteristic letters are listed in ANSI C78.380, Annex A.

The National Electric Code was changed in 2005 to require that luminaires for metal halide lamps shall be provided with either a containment barrier that encloses the lamp (historically referred to as an enclosed luminaire) or shall be provided with a means, typically a special lampholder, that will only accept an ANSI Type - O metal halide lamp. (Exception-this requirement will not apply to open luminaires with thick-glass parabolic

Copyright 2005 © American National Standard Lighting Group in affiliation with NEMA

Copyright National Electrical Manufacturers Association
Provided by IHS under license with NEMA
No reproduction or networking permitted without license from IHS
Not for Resale

reflector PAR lamps.). The intent of this requirement is that when open luminaires are specified only Type - O lamps will operate in those luminaires.

Also see UL 1598 for requirements on the construction of luminaires.

7.1 Lamp voltage rise limits

The lamp voltage of reference lamps, operating on a sinusoidal power supply of 60 Hz with the specified reference ballast at its rated input voltage, shall not increase more than the value given on the relevant lamp data sheet when going from stabilized bare lamp operation to stabilized operation in a luminaire.

7.2 Lamp temperatures

Luminaire design shall be such that the maximum lamp temperatures given in the physical characteristics section of the relevant lamp data sheet are not exceeded.

7.3 Lamp operating position

A luminaire shall maintain the lamp within its allowable operating position limits.

7.4 End of Life Behavior

Additional information is provided on the data sheet for 39W, C130.

Copyright National Electrical Manufacturers Association
Provided by IHS under license with NEMA
No reproduction or networking permitted without license from IHS Not for Resale

PART II Maximum Outline Drawings

Copyright 2005 © American National Standard Lighting Group in affiliation with NEMA

Copyright National Electrical Manufacturers Association
Provided by IHS under license with NEMA
No reproduction or networking permitted without license from IHS
Not for Resale

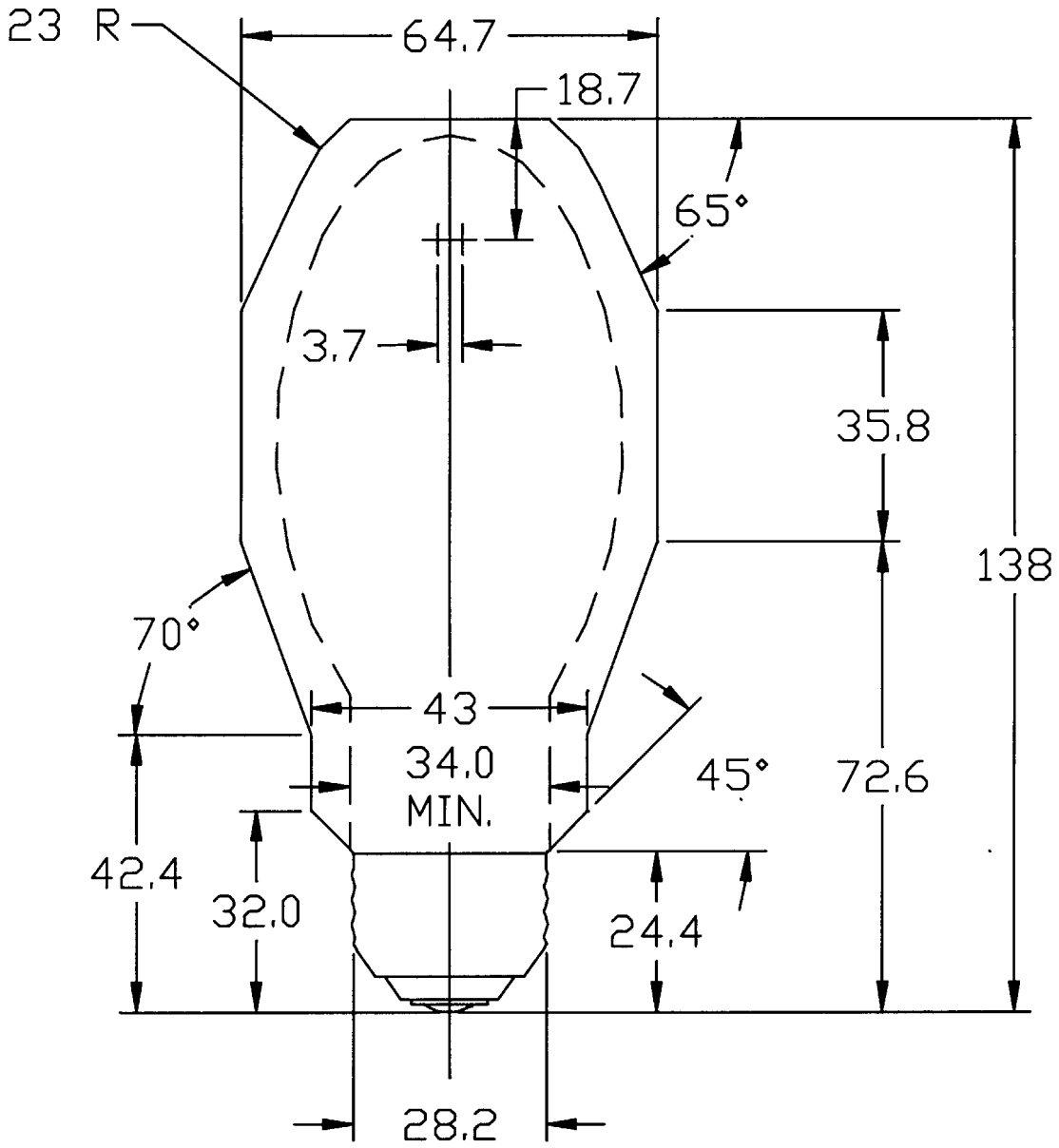

Figure 1
Maximum Outline Drawing

BD17 (BD54), ED17 (ED54) for lamps with Luminaire Code E

Copyright 2005 © American National Standard Lighting Group in affiliation with NEMA

Copyright National Electrical Manufacturers Association
Provided by IHS under license with NEMA
No reproduction or networking permitted without license from IHS
Not for Resale

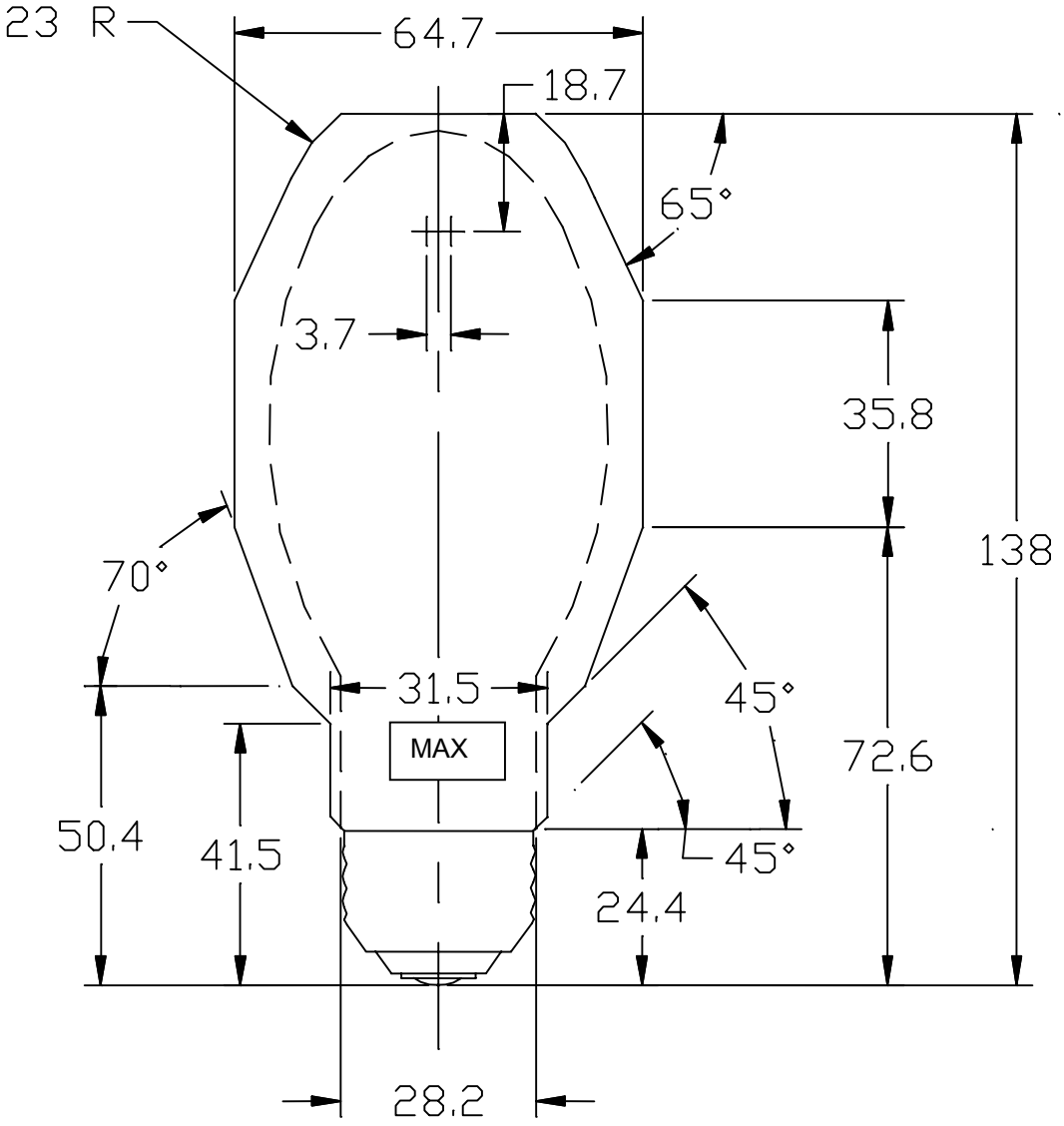

Figure 2
Maximum Outline Drawing

BD17 (BD54), ED17 (ED54) lamps only with Luminaire code O

Copyright National Electrical Manufacturers Association
Provided by IHS under license with NEMA
No reproduction or networking permitted without license from IHS
Not for Resale

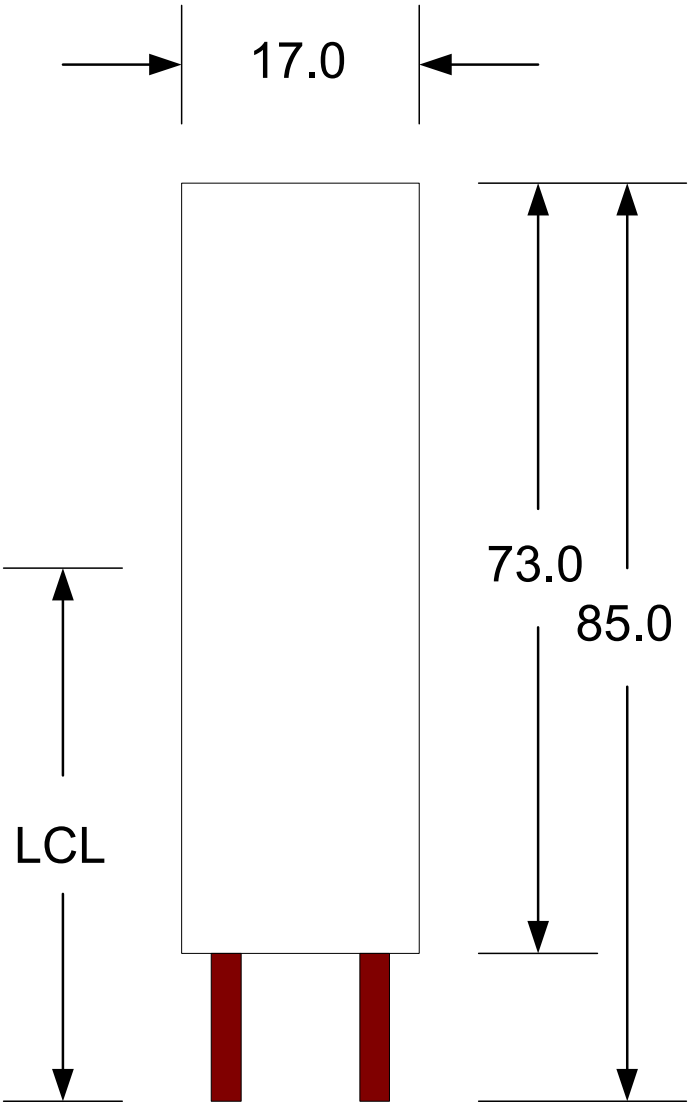

Figure 3
Maximum Outline Drawing

T4.5 (T14)

Copyright National Electrical Manufacturers Association
Provided by IHS under license with NEMA
No reproduction or networking permitted without license from IHS
Not for Resale

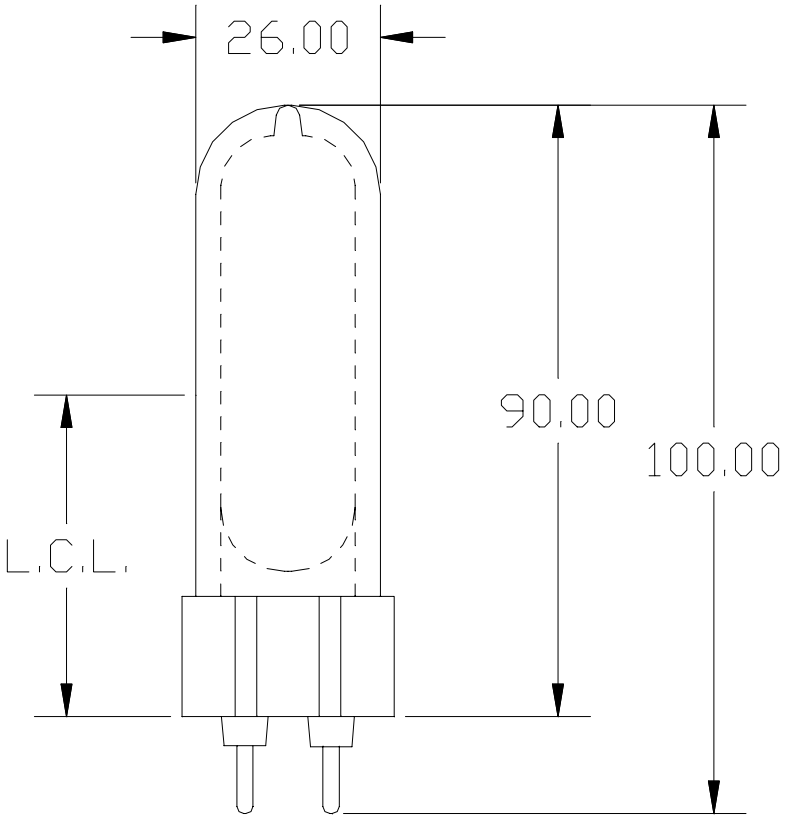

Figure 4
Maximum Outline Drawing

T6 (T19)

Copyright National Electrical Manufacturers Association
Provided by IHS under license with NEMA
No reproduction or networking permitted without license from IHS
Not for Resale

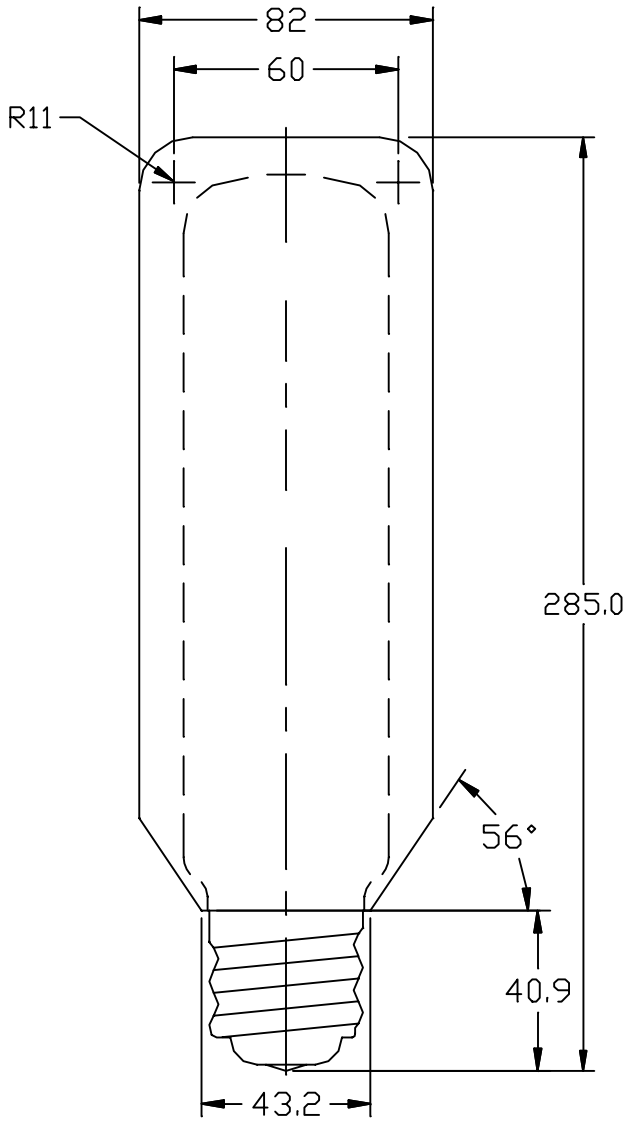

Figure 5
Maximum Outline Drawing

T15 (T48)

Copyright National Electrical Manufacturers Association
Provided by IHS under license with NEMA
No reproduction or networking permitted without license from IHS
Not for Resale

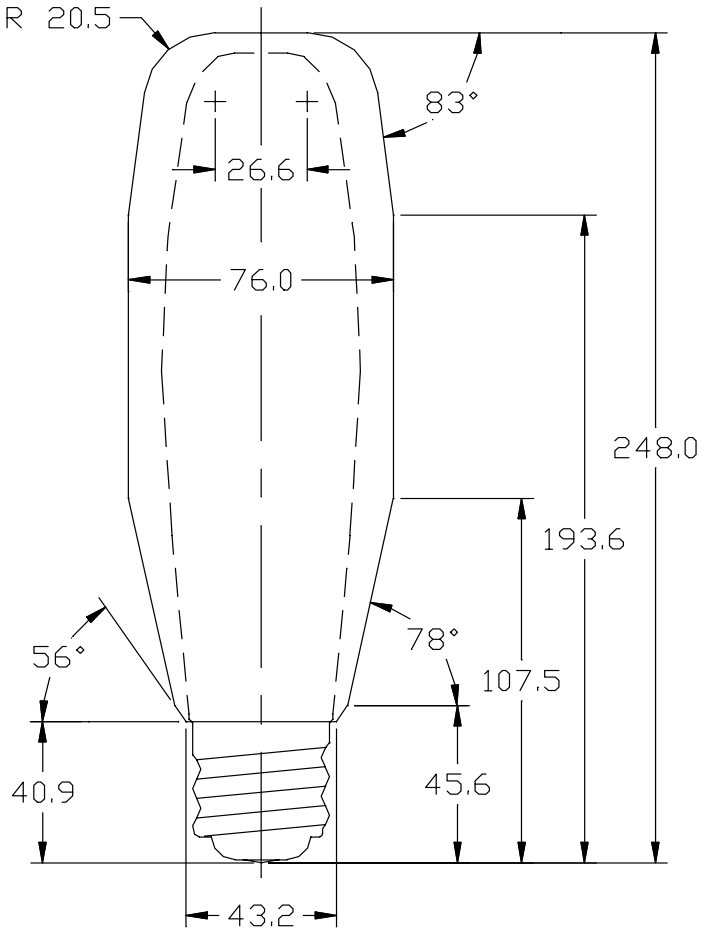

Figure 6
Maximum Outline Drawing

E18 (E57)

Copyright National Electrical Manufacturers Association
Provided by IHS under license with NEMA
No reproduction or networking permitted without license from IHS
Not for Resale

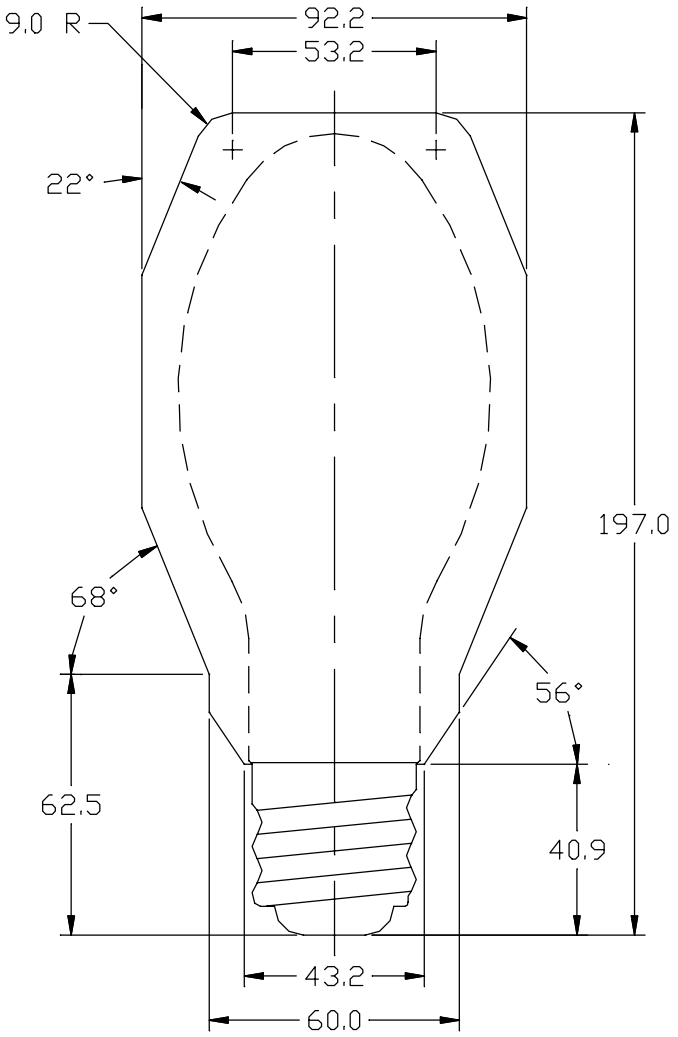

Figure 7
Maximum Outline Drawing

ED23.5 (ED75)

Copyright National Electrical Manufacturers Association
Provided by IHS under license with NEMA
No reproduction or networking permitted without license from IHS
Not for Resale

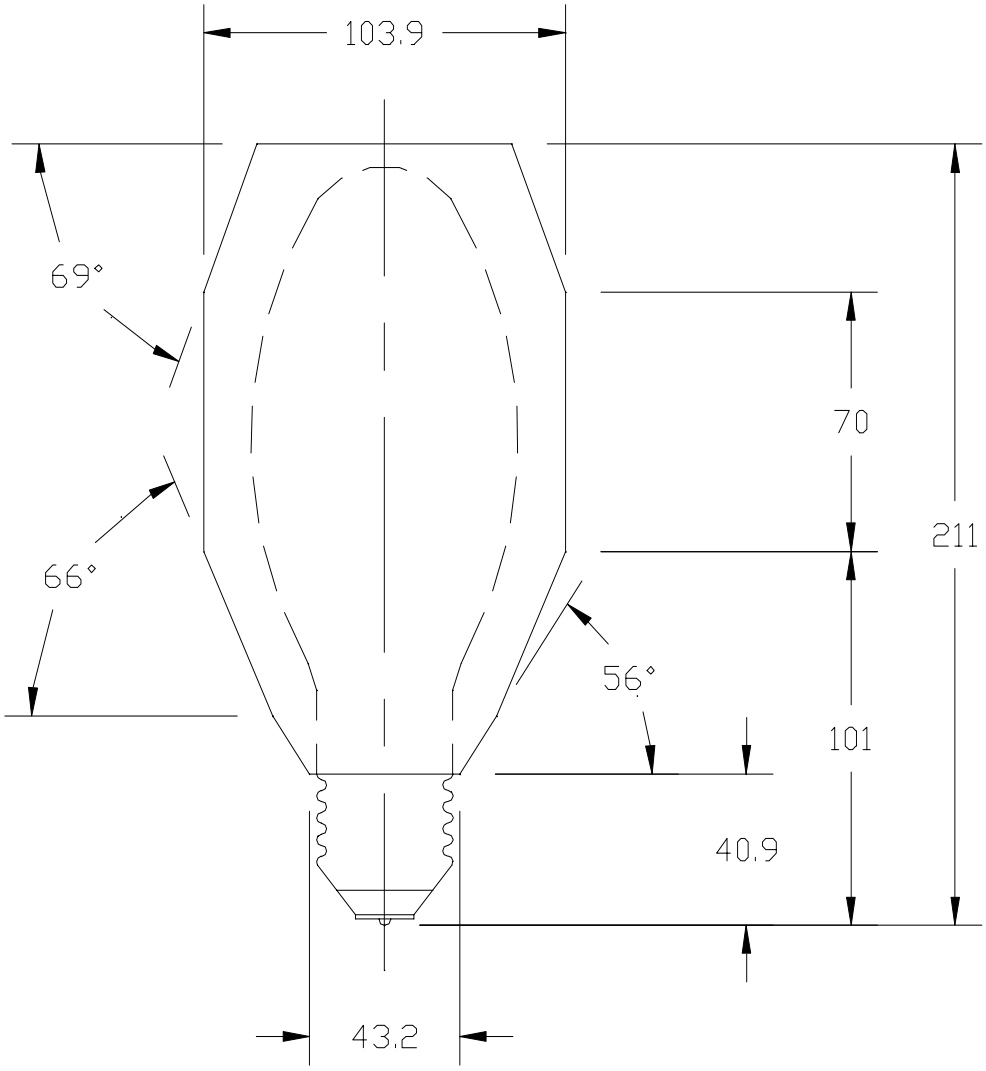

Figure 8
Maximum Outline Drawing

BT28 (BT90), ED28 (ED90)

Copyright National Electrical Manufacturers Association
Provided by IHS under license with NEMA
No reproduction or networking permitted without license from IHS
Not for Resale

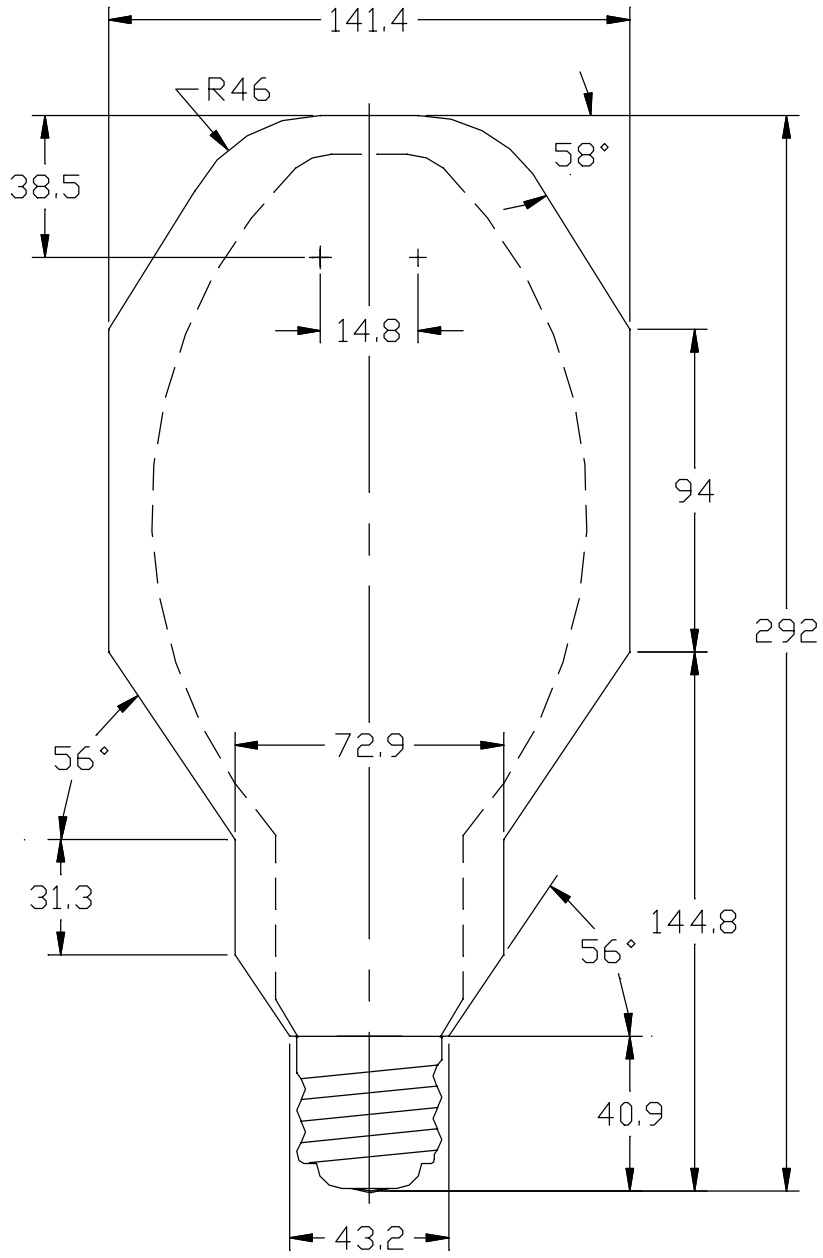

Figure 9
Maximum Outline Drawing

BT37 (BT118) or ED37 (ED118)

Copyright National Electrical Manufacturers Association
Provided by IHS under license with NEMA
No reproduction or networking permitted without license from IHS
Not for Resale

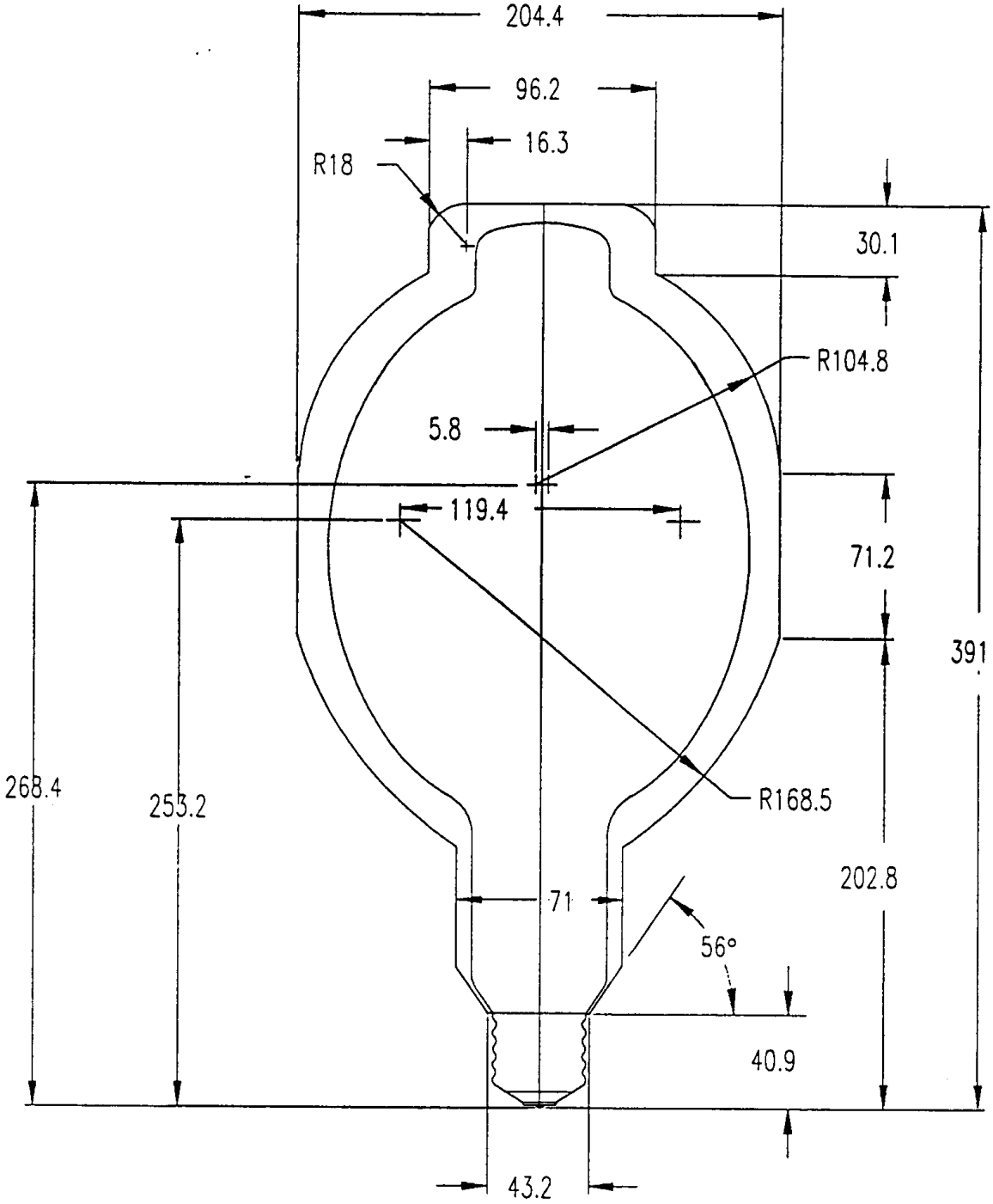

Figure 10
Maximum Outline Drawing

BT56 (BT180)

Copyright 2005 © American National Standard Lighting Group in affiliation with NEMA

Copyright National Electrical Manufacturers Association
Provided by IHS under license with NEMA
No reproduction or networking permitted without license from IHS
Not for Resale

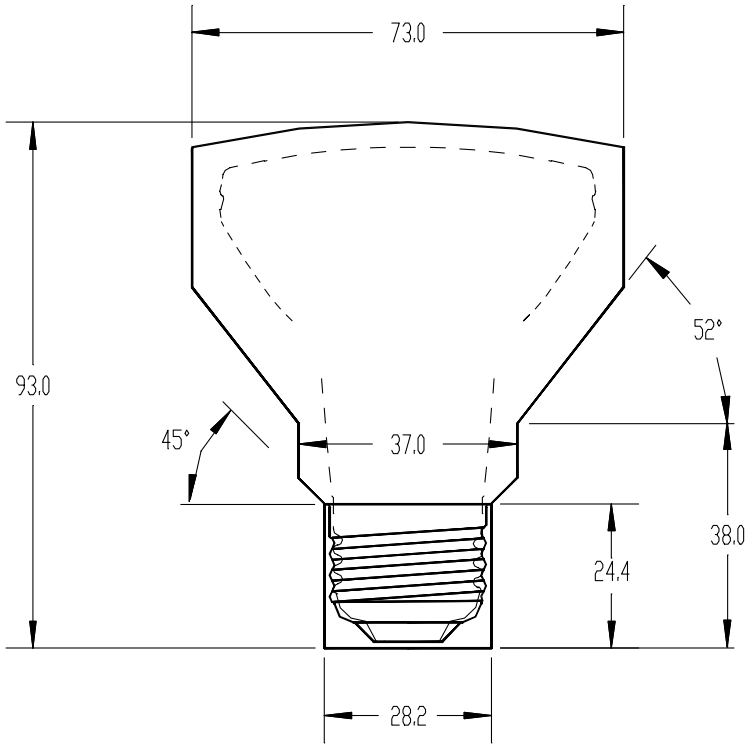

Figure 11
Maximum Outline Drawing

PAR20 (PAR63)

Copyright National Electrical Manufacturers Association
Provided by IHS under license with NEMA
No reproduction or networking permitted without license from IHS
Not for Resale

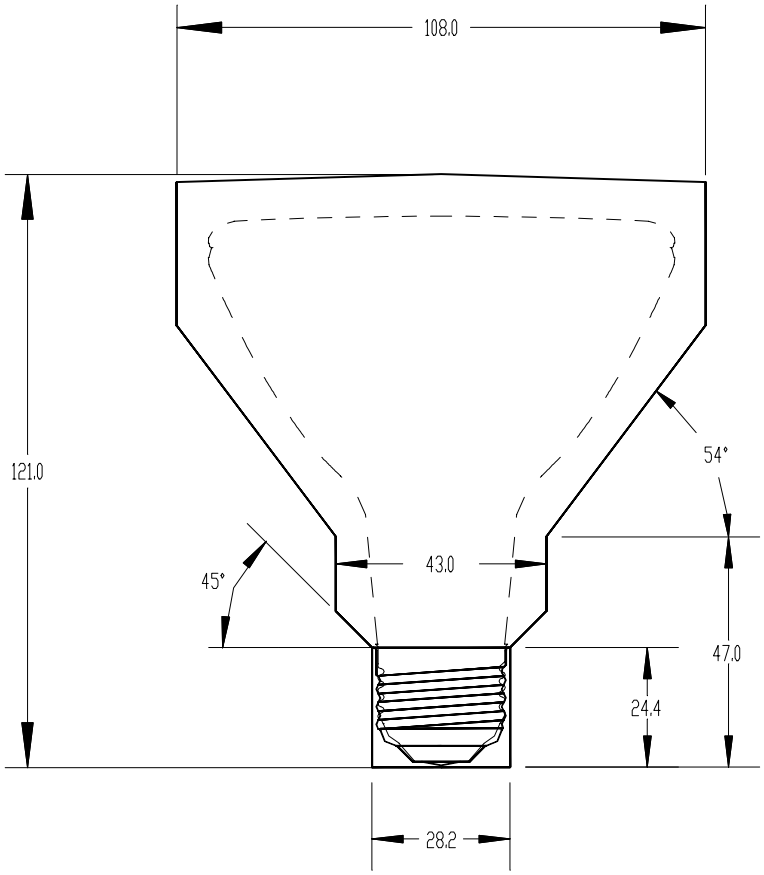

Figure 12
Maximum Outline Drawing

PAR30 (PAR95)

Copyright National Electrical Manufacturers Association
Provided by IHS under license with NEMA
No reproduction or networking permitted without license from IHS
Not for Resale

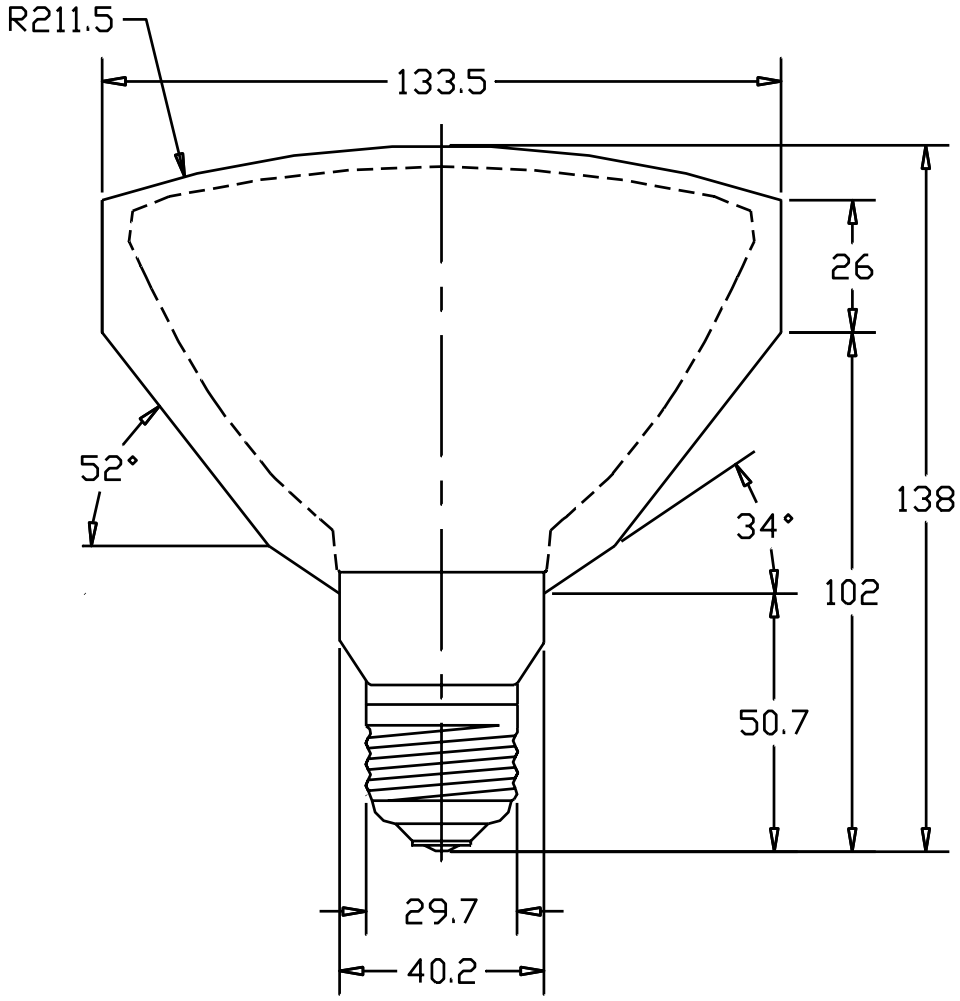

Figure 13
Maximum Outline Drawing

PAR38 (PAR121)

Copyright National Electrical Manufacturers Association
Provided by IHS under license with NEMA
No reproduction or networking permitted without license from IHS
Not for Resale

This Page Intentionally Left Blank

Copyright 2005 © American National Standard Lighting Group in affiliation with NEMA

Copyright National Electrical Manufacturers Association
Provided by IHS under license with NEMA
No reproduction or networking permitted without license from IHS
Not for Resale

PART III Single-Ended Lamp data sheets

Copyright 2005 © American National Standard Lighting Group in affiliation with NEMA

Copyright National Electrical Manufacturers Association
Provided by IHS under license with NEMA
No reproduction or networking permitted without license from IHS
Not for Resale

39 Watt, C130 Single-Ended Ceramic Metal Halide Lamp

1 LAMP SPECIFICATIONS

1.1 Lamp Designations and Descriptions

Designation	Bulb	Max Outline Drawing	Base
C130/E	T4.5 (T14)	3	G8.5
C130/E	T6 (T19)	4	G12
C130/O	ED17 (ED54)	2	E26/24
C130/O	PAR20 (PAR63)	11	E26/24
C130/O	PAR30 (PAR95)	12	E26/24

1.2 Lamp Physical Characteristics

	C130/O	*C130/O*	*C130/E*	*C130/O*	*C130/E*
Bulb	PAR30 (PAR95)	PAR20 (PAR63)	T6 (T19)	ED17 (ED54)	T4.5 (T14)[4]
Base	E26/24	E26/24	G12	E26/24	G8.5
Nominal diameter[1]	95 (3.75)	63 (2.5)	19 (0.75)	54 (2.13)	14 (0.55)
MOL[1]	121 (4.76)	93 (3.66)	100 (3.94)	138 (5.43)	85 (3.35)
LCL[1]	NA	NA	56 ± 2 (2.20 ± 0.08)	86 ± 3 3.39 ± 0.12	52 ± 2 (2.05 ± 0.08)
Effective arc length[1]	NA	NA	4 - 6 (0.16 – 0.24)	4 - 6 (0.16 – 0.24)	4 - 6 (0.16 – 0.24)
Operating position limitation	Universal	Universal	Universal	Universal	Universal
Max electrode tip deviation[2]	NA	NA	3	3	3
Max permissible bulb temperature[3]	300 (572)	300 (572)	500 (932)	400 (752)	550 (1022)
Max permissible base temperature[3]	200 (392)	200 (392)	280 (536)	190 (374)	250 (482)
Max permissible lens seal temperature[3]	160 (320)	160 (320)	NA	NA	NA

[1] Dimensions are in mm, with equivalent inches within parentheses
[2] Maximum electrode tip deviation is from base axis (apex at base eyelet), measured in degrees
[3] Temperatures are in ºC, with equivalent ºF within parentheses
[4] Some manufacturers use tubing up to 15mm outer diameter.

1.3 Operating Requirements at 100 Hours

	Min	Nom	Max
Voltage at lamp terminals (V, rms)	80	90	100
Lamp current (A, rms)		0.53	
Lamp wattage (W)		39	

Copyright 2005 © American National Standard Lighting Group in affiliation withNEMA

Copyright National Electrical Manufacturers Association
Provided by IHS under license with NEMA
No reproduction or networking permitted without license from IHS
Not for Resale

1.4 Lamp Reignition Voltage Spike (Vrs) During Warm-up

Maximum Reignition Voltage Spike ..... 250 volts

Electrical Conditions:
Supply voltage ..... 300 volts
Ballast short circuit current ..... 0.72 amperes
Impedance ..... 415 ohms

1.5. Lamp Reignition Voltage (Vr) During Steady Operation

Maximum Reignition Voltage.....…….. 250 volts

1.6 Lamp Starting Voltage and Warm-up Requirements

1.6.1 Lamp Starting Voltage Requirements as a function of time and temperature

Lamps shall start within the time specified at the ambient temperature indicated when the minimum open-circuit test voltages and the minimum starting pulse, Sec. 2.3, are applied.

Temperature	*Minimum OCV*		*Time*	*Probability of starting within the time specified*
	Vrms	*Vpeak*		
10°C ± 1°C (50°F ± 2°F)	209	296	30 s	98% of 0-hour lamps
-30°C ± 1°C (-22°F ± 2°F)	209	296	120 s	90% of 100-hour lamps

1.6.2 Lamp Warm-Up Requirements

Time to 90% of minimum lamp operating voltage……. 3 minutes

1.7 Reference Ballast Characteristics

Rated input voltage……. 220 V
Reference current…… 0.53 A
Impedance…… 350 Ω

2 Data for Ballast Design

2.1 Requirements for Lag Ballasts

2.1.2 For Lamps Requiring External Ignitor

Temperature	*Minimum OCV*		*Time*	*Probability of starting within the time specified*
	Vrms	*Vpeak*		
10°C ± 1°C (50°F ± 2°F)	209	296	30 s	98% of 0-hour lamps
-30°C ± 1°C (-22°F ± 2°F)	209	296	120 s	90% of 100-hour lamps

See 2.3 for starting pulse requirements

2.2 Requirements for Peak Lead Ballasts - NA

Copyright 2005 © American National Standard Lighting Group in affiliation withNEMA

Copyright National Electrical Manufacturers Association
Provided by IHS under license with NEMA
No reproduction or networking permitted without license from IHS
Not for Resale

2.3 Ignitor Requirements

	Option 1	*Option 2*
Min pulse height, kV	3.0	3.0
Max pulse height, kV	4.0	4.0
Min pulse width, μs @ kV	1.9 @ 2.7	1.0 @2.7
Min pulse repetition rate per half cycle	1	2
Pulse positions for lag circuit ballasts	60°-90°, 240º-270º	64º-110°, 244º-290º
Pulse positions for lead circuit ballasts	Reserved for future consideration	

2.4 Starting Current Requirements

	Lag ballasts	Peak-lead ballasts
Minimum starting current, A rms	0.53	Reserved for future consideration
Maximum starting current, A rms	0.80	Reserved for future consideration

2.5 Current Crest Factor

Maximum Current Crest Factor…… 1.8

2.6 Maximum Voltage across Lamp Terminals

A ballast shall not provide to the lamp terminals a voltage in excess of the following values:

RMS	Peak	Peak Pulse
305	548	4000

2.7 Lamp Operating Wattage

Design Center…… 39 watts

Range, 100-hour lamps…… 34 to 44 watts

3 Information for Luminaire Design (“CAUTION” of 7 (Part I) applies)

3.1 Voltage Rise, Luminaire Effect Limit

Lamp voltage change…… 5 volts, rms

3.4 End-of-Life Behavior

At the end of life of these lamps, rectification may occur. Ballasts or systems shall be designed either to be impervious to rectification or to shut themselves off (by means of a fuse or thermal switch, for example) in the event of rectification.

Copyright 2005 © American National Standard Lighting Group in affiliation withNEMA

Copyright National Electrical Manufacturers Association
Provided by IHS under license with NEMA
No reproduction or networking permitted without license from IHS
Not for Resale

50 Watt, M110 Single-Ended Metal Halide Lamp

1 LAMP SPECIFICATIONS

1.1 Lamp Designations and Descriptions

Designation	Bulb	Maximum Outline Drawing	Base
M110/E	B17 (E54) or E17 (E54)	Fig. 1	E26/24 Medium Screw
M110/O	B17 (E54) or E17 (E54)	Fig. 2	E26/24 Medium Screw

1.2 Lamp Physical Characteristics

	M110/E or M110/O
Bulb	B17 (B54) or E17 (E54)
Base	E26/24
Nominal diameter [1]	54 (2.13)
Maximum overall length (MOL) [1]	138 (5.43)
Light center length (LCL) [1]	86 ± 3 (3.39 ± 0.12)
Effective arc length [1]	4 - 11 (0.16 –0.44)
Maximum electrode tip deviation [2]	3
Maximum permissible bulb temperature [3]	400 (752)
Maximum permissible base temperature [3]	190 (374)

[1] Dimensions are in mm, with equivalent inches within parentheses
[2] Maximum electrode tip deviation is from base axis (apex at base eyelet), measured in degrees
[3] Temperatures are in ºC, with equivalent ºF within parentheses

1.3 Operating Requirements at 100 Hours

	Min	Nom	Max
Voltage at lamp terminals (V, rms)	75	85	95
Lamp current (A, rms)		0.68	
Lamp wattage (W)		50	

Copyright 2005 © American National Standard Lighting Group in affiliation with NEMA

Copyright National Electrical Manufacturers Association
Provided by IHS under license with NEMA
No reproduction or networking permitted without license from IHS
Not for Resale

1.4 Lamp Reignition Voltage Spike (Vrs) During Warm-up

Maximum Reignition Voltage Spike ..... 150 volts, peak

Electrical Conditions:
Supply voltage ..... 300 volts
Ballast short circuit current ..... 0.77 amperes
Impedance ..... 390 ohms

1.5 Lamp Reignition Voltage (Vr) During Steady Operation

Maximum Reignition Voltage.....…… 250 volts

1.6 Lamp Starting Voltage and Warm-up Requirements

1.6.1 Lamp Starting Voltage Requirements as a Function of Time and Temperature

Lamps shall start within the time specified at the ambient temperature indicated when the minimum open-circuit test voltages and the minimum starting pulse, Sec. 2.3, are applied.

Temperature	*Minimum OCV*		*Time*	*Probability of starting within the time specified*
	Vrms	*Vpeak*		
10°C ± 1°C (50°F ± 2°F)	235	332	10 s	98% of 0-hour lamps
-30°C ± 1°C (-22°F ± 2°F)	235	332	120 s	90% of 100-hour lamps

1.6.2 Lamp Warm-Up Requirements

Time to 95% of minimum lamp operating voltage……. 2 minutes

1.7 Reference Ballast Characteristics

Rated input voltage……. 220 V
Reference current…… 0.68 A
Impedance…… 272 Ω

2 DATA FOR BALLAST DESIGN

2.1 Requirements for Lag Ballasts

2.1.2 For Lamps Requiring External Ignitor

Temperature	*Minimum OCV*		*Time*	*Probability of starting within the time specified*
	Vrms	*Vpeak*		
10°C ± 1°C (50°F ± 2°F)	235	332	10 s	98% of 0-hour lamps
-30°C ± 1°C (-22°F ± 2°F)	235	332	120 s	90% of 100-hour lamps

See 2.3 for starting pulse requirements.

2.2 Requirements for Peak Lead ballasts - NA

Copyright 2005 © American National Standard Lighting Group in affiliation with NEMA

Copyright National Electrical Manufacturers Association
Provided by IHS under license with NEMA
No reproduction or networking permitted without license from IHS
Not for Resale

2.3 Ignitor Requirements

	Option 1	*Option 2*
Minimum pulse height, kV	3.0	3.0
Maximum pulse height, kV	4.0	4.0
Minimum pulse width, __ µs @ __ kV	1.9 @ 2.7	1.0 @ 2.7
Minimum pulse repetition rate per half cycle	1	2
Pulse position(s) for lag ballasts	60° - 90°, 240° - 270°	64º-110º, 244º-290º

2.4 Starting Current Requirements

	Lag ballasts	Peak-lead ballasts
Minimum starting current, A rms	0.68	Reserved for future consideration
Maximum starting current, A rms	1.1	Reserved for future consideration

2.5 Current Crest Factor

Maximum Current Crest Factor…….. 1.8

2.6 Maximum Voltage across Lamp Terminals

A ballast shall not provide to the lamp terminals a voltage in excess of the following values:

RMS	Peak	Peak Pulse
305	548	4000

2.7 Lamp Operating Wattage

Design Center……. 50 watts

Range, 100-hour lamps…… 40 to 60 watts

3 Information for Luminaire Design (“CAUTION” of 7 (Part I) applies)

3.1 Voltage Rise, Luminaire Effect Limit

Lamp voltage change…… 5 volts, rms

Copyright 2005 © American National Standard Lighting Group in affiliation with NEMA

Copyright National Electrical Manufacturers Association
Provided by IHS under license with NEMA
No reproduction or networking permitted without license from IHS
Not for Resale

70 Watt M98 Single-Ended Metal Halide Lamp

1 LAMP SPECIFICATIONS

1.1 Lamp Designations and Descriptions

Designation	Bulb	Max. Outline Drawing	Base
M98/E	B17 (B54) or E17 (E54)	1	E26/24 Medium Screw
M98/O	B17 (B54) or E17 (E54)	2	E26/24 Medium Screw
M98/O	PAR38 (PAR121)	13	E26/50x39 Medium Skirt

1.2 Lamp Physical Characteristics

	M98/E or M98/O	M98/O
Bulb	B17 (B54) or E17 (E54)	PAR38 (PAR121)
Base	E26/24	E26/50x39[1]
Nominal diameter [1]	54 (2.13)	121 (4.75)
Maximum overall length (MOL) [1]	138 (5.43)	138 (5.43)
Light center length (LCL) [1]	86 ± 3 (3.39 ± 0.12)	NA
Effective arc length [1]	5.5 – 11.5 (0.21 - 0.45)	NA
Maximum electrode tip deviation [2]	3	NA
Maximum permissible bulb temperature [3]	400 (752)	350 (662)
Maximum permissible base temperature [3]	190 (374)	190 (374)

[1] Dimensions are in mm, with equivalent inches within parentheses
[2] Maximum electrode tip deviation is from base axis (apex at base eyelet), measured in degrees
[3] Temperatures are in ºC, with equivalent ºF within parentheses

1.3 Operating Requirements at 100 Hours

	Min	Nom	Max
Voltage at lamp terminals (V, rms)	75	85	100
Lamp current (A, rms)		0.9	
Lamp wattage (W)		70	

[1] The PAR 38 lamp will not fit into a medium exclusionary EX26 lampholder.

Copyright 2005 © American National Standard Lighting Group in affiliation with NEMA

Copyright National Electrical Manufacturers Association
Provided by IHS under license with NEMA
No reproduction or networking permitted without license from IHS
Not for Resale

1.4 Lamp Reignition Voltage Spike (Vrs) During Warm-up

Maximum Reignition Voltage Spike ..... 150 volts, peak

Electrical Conditions:
Supply voltage ..... 300 volts
Ballast short circuit current ..... 1.28 amperes
Impedance ..... 234.0 ohms

1.5 Lamp Reignition Voltage (Vr) During Steady Operation

Maximum Reignition Voltage.....…… 240 volts

1.6 Lamp Starting Voltage and Warm-up Requirements

1.6.1 Lamp Starting Voltage Requirements as a function of time and temperature

Lamps shall start within the time specified at the ambient temperature indicated when the minimum open-circuit test voltages and the minimum starting pulse, Sec. 2.3, are applied.

Temperature	*Minimum OCV*		*Time*	*Probability of starting within the time specified*
	Vrms	*Vpeak*		
10°C ± 1°C (50°F ± 2°F)	235	332	10 s	98% of 0-hour lamps
-30°C ± 1°C (-22°F ± 2°F)	235	332	120 s	90% of 100-hour lamps

1.6.2 Lamp Warm-Up Requirements

Time to 95% of minimum lamp operating voltage……. 2 minutes

1.7 Reference Ballast Characteristics

Rated input voltage…….. 220 V
Reference current…… 0.9 A
Impedance…… 188 Ω

2 DATA FOR BALLAST DESIGN

2.1 Requirements for Lag Ballasts

2.1.2 For lamps Requiring an External Ignitor

Temperature	*Minimum OCV*		*Time*	*Probability of starting within the time specified*
	Vrms	*Vpeak*		
10°C ± 1°C (50°F ± 2°F)	235	332	10 s	98% of 0-hour lamps
-30°C ± 1°C (-22°F ± 2°F)	235	332	120 s	90% of 100-hour lamps

See 2.3 for starting pulse requirements.

2.2 Requirements for Peak Lead Ballasts - NA

Copyright 2005 © American National Standard Lighting Group in affiliation with NEMA

Copyright National Electrical Manufacturers Association
Provided by IHS under license with NEMA
No reproduction or networking permitted without license from IHS
Not for Resale

2.3 Ignitor Requirements

	Option 1	*Option 2*
Minimum pulse height, kV	3.0	3.0
Maximum pulse height, kV	4.0	4.0
Minimum pulse width, __ µs @ __ kV	1.9 @ 2.7	1.0 @ 2.7
Minimum pulse repetition rate per half cycle	1	2
Pulse position(s) for lag ballasts	60° - 90°, 240° - 270°	64º-110º, 244º-290º

2.4 Starting Current Requirements

	Lag ballasts	Peak-lead ballasts
Minimum starting current, A rms	0.9	Reserved for future consideration
Maximum starting current, A rms	1.5	Reserved for future consideration

2.5 Current Crest Factor

Maximum Current Crest Factor…….. 1.8

2.6 Maximum Voltage across Lamp Terminals

A ballast shall not provide to the lamp terminals a voltage in excess of the following values:

RMS	Peak	Peak Pulse
305	548	4000

2.7 Lamp Operating Wattage

Design Center……. 70 watts

Range, 100-hour lamps…… 56 to 84 watts

3 Information for Luminaire Design (“CAUTION” of 7 (Part I) applies)

3.1 Voltage Rise, Luminaire Effect Limit

Lamp voltage change…… 5 volts, rms

Copyright 2005 © American National Standard Lighting Group in affiliation with NEMA

Copyright National Electrical Manufacturers Association
Provided by IHS under license with NEMA
No reproduction or networking permitted without license from IHS
Not for Resale

100 Watt M90 Single-Ended Metal Halide Lamp

1 LAMP SPECIFICATIONS

1.1 Lamp Designations and Descriptions

Designation	Bulb	Max. Outline Drawing	Base
M90/E	B17 (B54) or E17 (E54)	1	E26/24 Medium Screw
M90/O	B17 (B54) or E17 (E54)	2	E26/24 Medium Screw
M90/O	PAR38 (PAR121)	13	E26/50x39 Medium Skirted Screw

1.2 Lamp Physical Characteristics

	M90/E or M90/O	*M90/O*
Bulb	B17 (B54) or E17 (E54)	PAR38 (PAR121)
Base	E26/24	E26/50x39[1]
Nominal diameter [1]	54 (2.13)	121 (4.75)
Maximum overall length (MOL) [1]	138 (5.43)	138 (5.43)
Light center length (LCL) [1]	86 ± 3 (3.39 ± 0.12)	NA
Effective arc length [1]	8.5 –16.5 (0.33 - 0.65)	NA
Maximum electrode tip deviation [2]	3	NA
Maximum permissible bulb temperature [3]	400 (752)	350 (662)
Maximum permissible base temperature [3]	190 (374)	190 (374)

[1] Dimensions are in mm, with equivalent inches within parentheses
[2] Maximum electrode tip deviation is from base axis (apex at base eyelet), measured in degrees
[3] Temperatures are in ºC, with equivalent ºF within parentheses

1.3 Operating requirements at 100 hours

	Min	Nom	Max
Voltage at lamp terminals (V, rms)	90	100	110
Lamp current (A, rms)		1.1	
Lamp wattage (W)		100	

[1] The PAR 38 lamp will not fit into a medium exclusionary EX26 lampholder.

Copyright 2005 © American National Standard Lighting Group in affiliation with NEMA

Copyright National Electrical Manufacturers Association
Provided by IHS under license with NEMA
No reproduction or networking permitted without license from IHS
Not for Resale

1.4 Lamp Reignition Voltage Spike (Vrs) During Warm-up

Maximum Reignition Voltage Spike ..... 150 volts, peak

Electrical Conditions:
Supply voltage ..... 300 volts
Ballast short circuit current ..... 1.5 amperes
Impedance ..... 200.0 ohms

1.5 Peak Voltage During Steady Operation

Maximum Reignition Voltage.....…… 250 volts

1.6 Lamp Starting Voltage and Warm-up Requirements

1.6.1 Lamp Starting Voltage Requirements as a function of time and temperature

Lamps shall start within the time specified at the ambient temperature indicated when the minimum open-circuit test voltages and the minimum starting pulse, Sec. 2.3, are applied.

Temperature	*Minimum OCV*		*Time*	*Probability of starting within the time specified*
	Vrms	*Vpeak*		
10°C ± 1°C (50°F ± 2°F)	235	332	10 s	98% of 0-hour lamps
-30°C ± 1°C (-22°F ± 2°F)	235	332	120 s	90% of 100-hour lamps

1.6.2 Lamp Warm-Up Requirements

Time to 95% of minimum lamp operating voltage……. 2 minutes

1.7 Reference ballast Characteristics

Rated input voltage……. 220 V
Reference current…… 1.10 A
Impedance…… 157 Ω

2 DATA FOR BALLAST DESIGN

2.1 Requirements for Lag Ballasts

2.1.2 For lamps Requiring an External Ignitor

Temperature	*Minimum OCV*		*Time*	*Probability of starting within the time specified*
	Vrms	*Vpeak*		
10°C ± 1°C (50°F ± 2°F)	235	332	10 s	98% of 0-hour lamps
-30°C ± 1°C (-22°F ± 2°F)	235	332	120 s	90% of 100-hour lamps

See 2.3 for starting pulse requirements.

2.2 Requirements for Peak Lead Ballasts - NA

Copyright 2005 © American National Standard Lighting Group in affiliation with NEMA

Copyright National Electrical Manufacturers Association
Provided by IHS under license with NEMA
No reproduction or networking permitted without license from IHS
Not for Resale

2.3 Ignitor Requirements

	Option 1	*Option 2*
Minimum pulse height, kV	3.0	3.0
Maximum pulse height, kV	4.0	4.0
Minimum pulse width, __ µs @ __ kV	1.9 @ 2.7	1.0 @ 2.7
Minimum pulse repetition rate per half cycle	1	2
Pulse position(s) for lag ballasts	60° - 90°, 240° - 270°	64º-110º, 244º-290º

2.4 Starting Current Requirements

	Lag ballasts	Peak-lead ballasts
Minimum starting current, A rms	1.1	Reserved for future consideration
Maximum starting current, A rms	1.5	Reserved for future consideration

2.5 Current Crest Factor

Maximum Current Crest Factor…….. 1.8

2.6 Maximum Voltage across Lamp Terminals

A ballast shall not provide to the lamp terminals a voltage in excess of the following values:

RMS	Peak	Peak Pulse
305	548	4000

2.7 Lamp Operating Wattage

Design Center……. 100 watts

Range, 100-hour lamps…… 80 to 120 watts

3 Information for Luminaire Design (“CAUTION” of 7 (Part I) applies)

3.1 Voltage Rise, Luminaire Effect Limit

Lamp voltage change…… 5 volts, rms

Copyright 2005 © American National Standard Lighting Group in affiliation with NEMA

Copyright National Electrical Manufacturers Association
Provided by IHS under license with NEMA
No reproduction or networking permitted without license from IHS
Not for Resale

150 Watt, M102 Single-Ended Metal Halide Lamp

1 Lamp specifications

1.1 Lamp designations and descriptions

Designation	Bulb	Max. Outline Drawing	Base
M102/E	B17 (B54) or E17 (E54)	1	E26/24 Medium Screw
M102/O	B17 (B54) or E17 (E54)	2	E26/24 Medium Screw
M102/O	PAR38	13	E26/50x39 Medium Skirt

1.2 Lamp Physical Characteristics

	M102/E or M102/O	*M102/O*
Bulb	B17 (B54) or E17 (E54)	PAR38 (PAR121)
Base	E26/24	E26/50x39[1]
Nominal diameter [1]	54 (2.13)	121 (4.75)
Maximum overall length (MOL) [1]	138 (5.43)	138 (5.43)
Light center length (LCL) [1]	86 ± 3 (3.39 ± 0.12)	NA
Effective arc length [1]	7.5 – 19.5 (0.29 - 0.77)	NA
Maximum electrode tip deviation [2]	3	NA
Maximum permissible bulb temperature [3]	400 (752)	350 (662)
Maximum permissible base temperature [3]	190 (374)	190 (374)

[1] Dimensions are in mm, with equivalent inches within parentheses
[2] Maximum electrode tip deviation is from base axis (apex at base eyelet), measured in degrees
[3] Temperatures are in ºC, with equivalent ºF within parentheses

1.3 Operating Requirements at 100 Hours

	Min	Nom	Max
Voltage at lamp terminals (V, rms)	85	95	105
Lamp current (A, rms)		1.8	
Lamp wattage (W)		150	

[1] The PAR 38 lamp will not fit into a medium exclusionary EX26 lampholder.

Copyright 2005 © American National Standard Lighting Group in affiliation with NEMA

Copyright National Electrical Manufacturers Association
Provided by IHS under license with NEMA
No reproduction or networking permitted without license from IHS
Not for Resale

1.4 Lamp Reignition Voltage Spike (Vrs) During Warm-up

Maximum Reignition Voltage Spike ……. 150 volts, peak

Electrical Conditions:
Supply voltage ……. 300 volts
Ballast short circuit current …… 2.5 amperes
Impedance …… 120.0 ohms

1.5 Peak Voltage During Steady Operation

Maximum Reignition Voltage.....…….. 250 volts

1.6 Lamp Starting Voltage and Warm-up Requirements

1.6.1 Lamp Starting Voltage Requirements as a function of time and temperature

Lamps shall start within the time specified at the ambient temperature indicated when the minimum open-circuit test voltages and the minimum starting pulse, Sec. 2.3, are applied.

Temperature	*Minimum OCV*		*Time*	*Probability of starting within the time specified*
	Vrms	*Vpeak*		
10°C ± 1°C (50°F ± 2°F)	235	332	10 s	98% of 0-hour lamps
-30°C ± 1°C (-22°F ± 2°F)	235	332	120 s	90% of 100-hour lamps

1.6.2 Lamp Warm-Up Characteristics

Time to 95% of minimum lamp operating voltage…… 2 minutes

1.7 Reference Ballast Requirements

Rated input voltage……..……. 220 V
Reference current…….. 1.80 A
Impedance…….. 97 Ω

2 DATA FOR BALLAST DESIGN

2.1 Requirements for Lag Ballasts

2.1.2 For Lamps Requiring External Ignitor

Temperature	*Minimum OCV*		*Time*	*Probability of starting within the time specified*
	Vrms	*Vpeak*		
10°C ± 1°C (50°F ± 2°F)	235	332	10 s	98% of 0-hour lamps
-30°C ± 1°C (-22°F ± 2°F)	235	332	120 s	90% of 100-hour lamps

See 2.3 for starting pulse requirements.

2.2 Requirements for Peak Lead ballasts - NA

Copyright 2005 © American National Standard Lighting Group in affiliation with NEMA

Copyright National Electrical Manufacturers Association
Provided by IHS under license with NEMA
No reproduction or networking permitted without license from IHS
Not for Resale

2.3 Ignitor Requirements

	Option 1	*Option 2*
Minimum pulse height, kV	3.0	3.0
Maximum pulse height, kV	4.0	4.0
Minimum pulse width, __ µs @ __ kV	1.9 @ 2.7	1.0 @ 2.7
Minimum pulse repetition rate per half cycle	1	2
Pulse position(s) for lag ballasts	60° - 90°, 240° - 270°	64º-110º, 244º-290º

2.4 Starting Current Requirements

	Lag ballasts	Peak-lead ballasts
Minimum starting current, A rms	1.8	Reserved for future consideration
Maximum starting current, A rms	3.0	Reserved for future consideration

2.5 Current Crest Factor

Maximum Current Crest Factor…….. 1.8

2.6 Maximum Voltage across Lamp Terminals

A ballast shall not provide to the lamp terminals a voltage in excess of the following values:

RMS	Peak	Peak Pulse
305	548	4000

2.7 Lamp Operating Wattage

Design Center…….. 150 watts

Range, 100-hour lamps…… 120 to 180 watts

3 Information for Luminaire Design (“CAUTION” of 7 (Part I) applies)

3.1 Voltage Rise, Luminaire Effect Limit

Lamp voltage change…… 5 volts, rms

Copyright 2005 © American National Standard Lighting Group in affiliation with NEMA

Copyright National Electrical Manufacturers Association
Provided by IHS under license with NEMA
No reproduction or networking permitted without license from IHS
Not for Resale

150 Watt M107 Metal Halide Lamp

1. LAMP SPECIFICATIONS

1.1 Lamp Designations and Descriptions

Designation	Bulb	Max. Outline Drawing	Base
M107/E	ED17(ED54) or BD17(BD54)	Fig. 1	E26/24 Medium screw
M107/E	ED28(ED90) or BD28(BD90)	Fig. 8	E39 Mogul screw
M107/O	ED28(ED90) or BD28(BD90)	Fig. 8	EX39 Mogul screw exclusionary

1.2 Lamp Physical Characteristics

	M107/E	M107/E	M107/O
Bulb	ED17(ED54) BD17(BD54)	ED28(ED90) BD28(BD90)	ED28(ED90) BD28(BD90)
Base	E26/24	E39	EX39
Nominal diameter [1]	54 (2.13)	90 (3.50)	90 (3.50)
Maximum overall length (MOL) [1]	138 (5.43)	211 (8.31)	211 (8.31)
Light center length (LCL) [1]	86 ± 3 (3.39 ± 0.1)	127 ± 5 (5.0 ± 0.2)	127 ± 5 (5.0 ± 0.2)
Effective arc length [1]	12 - 24 (0.47 – 0.94)	12 - 24 (0.47 – 0.94)	12 - 24 (0.47 – 0.94)
Maximum electrode tip deviation [2]	3	3	3
Maximum permissible bulb temperature [3]	400 (752)	400 (752)	400 (752)
Maximum permissible base temperature [3]	190 (374) [4]	210 (410)	210 (410)

[1] Dimensions are in mm, with equivalent inches within parentheses
[2] Maximum electrode tip deviation is from base axis (apex at base eyelet), measured in degrees
[3] Temperatures are in ºC, with equivalent ºF within parentheses
[4] Some manufacturers allow base temperature up to 210°C (410°F)

1.3 Operating Requirements at 100 Hours

	Vertical Base Up		
	Min	Nom	Max
Voltage at lamp terminals (V, rms)	100	110	120
Lamp current (A, rms)		1.5	
Lamp wattage (W)		150	

Copyright 2005 © American National Standard Lighting Group in affiliation with NEMA

Copyright National Electrical Manufacturers Association
Provided by IHS under license with NEMA
No reproduction or networking permitted without license from IHS
Not for Resale

1.4 Lamp Reignition Voltage Spike (Vrs) During Warm-up

Maximum Reignition Voltage Spike ..... 150 volts, peak

Electrical Conditions:
Supply voltage ..... 340 volts
Ballast short circuit current ..... 1.9 amperes
Impedance ..... 179 ohms

1.5 Lamp Reignition Voltage (Vr) During Steady Operation

Maximum Reignition Voltage.....…….... 250 volts

1.6 Lamp Starting Voltage and Warm-up Requirements

1.6.1 Lamp Starting Voltage Requirements as a Function of Time and Temperature

Lamps shall start within the time specified at the ambient temperature indicated under the following test conditions:

Temperature	*Minimum OCV*		*Time*	*Probability of starting within the time specified*
	Vrms	*Vpeak*		
10°C ± 1°C (50°F ± 2°F)	350	495	120 s	98% of 0-hour lamps
-30°C ± 1°C (-22°F ± 2°F)	382	540	120 s	90% of 100-hour lamps

1.6.2 Lamp Warm-Up Requirements

Time to 95% of minimum lamp operating voltage……. 10 minutes

1.7 Reference ballast Characteristics

Rated input voltage……. 220 V
Reference current…… 1.5 A
Impedance…… 113 Ω

2 DATA FOR BALLAST DESIGN

2.1 Requirements for Lag Ballasts

Not Applicable

2.2 Requirements for Peak Lead Ballasts

2.2.1 For Lamps not Requiring External Ignitor[2]

Temperature	Minimum OCV		Time	*Probability of starting within the time specified*
	Volts,rms	*Crest factor*		
10°C ± 1°C (50°F ± 2°F)	250*	2.0	120 s	98% for 0-h lamps
-30°C ± 1°C (-22°F ± 2°F)	280**	2.0	120 s	90% for 100-h lamps

*The rms open-circuit voltage may be reduced by 10 volts for each 0.1 increase of the voltage crest factor, down to 230 volts rms, as the lowest value.
** The rms open-circuit voltage may be reduced by 10 volts for each 0.1 increase in the voltage crest factor, down to 260 volts rms, as the lowest value.

[2] These lamps are suitable for ballasts designed for M57 lamps with the approval of the ballast manufacturer.

Copyright 2005 © American National Standard Lighting Group in affiliation with NEMA

Copyright National Electrical Manufacturers Association
Provided by IHS under license with NEMA
No reproduction or networking permitted without license from IHS
Not for Resale

2.2.3 Current Waveshape Characteristic Requirements for Peak Lead Ballasts

Current slope (di/dt), minimum…… 0.65 amperes per millisecond
Off time (OT), maximum…….. 2.75 milliseconds
Peak Current, maximum…….. 3.8 amperes
Overshoot (OS), maximum…….. +45 milliamperes

2.2.4 Minimum Sustaining Voltage (Vss) for Peak Lead Ballasts

Minimum Sustaining Voltage (Vss)						
	Current Slope (di/dt), amperes per millisecond, at I=0					
Off-time (milliseconds)	0.65	0.7	0.9	1.1	1.3	1.5
2.75	283	277	254	231	208	185
2.50	276	270	247	222	201	178
2.25	268	262	240	217	194	171
2.00	261	256	233	210	187	164
1.75	254	248	225	202	179	156
1.50	247	241	218	195	172	149

The values given in this table are derived from the equation: $Vss = C_1 + C_2 (OT) – C_3 (di/dt)$ where:

Vss = minimum sustaining voltage in volts, (rms)
OT = Off-time in milliseconds
di/dt = Current slope at i=0 in amperes per millisecond
C1 = 278 C2 = 29 C3 = 115

2.3 Ignitor Requirements - NA

2.4 Starting Current Requirements

	Lag ballasts	Peak-lead ballasts
Minimum starting current, A rms	na	1.5
Maximum starting current, A rms	na	2.5

2.5 Current Crest Factor

Maximum Current Crest Factor…… 1.8

2.6 Maximum Voltage across Lamp Terminals

RMS	Peak	Peak Pulse
528	1100	NA

2.7 Lamp Operating Wattage

Design Center……. 150 watts

Range, 100-hour lamps…… 120 to 180 watts

3 INFORMATION FOR LUMINAIRE DESIGN ("CAUTION" of 7 (Part I) applies)

3.1 Voltage Rise, Luminaire Effect Limit

Lamp voltage change……. 5 volts, rms

Copyright 2005 © American National Standard Lighting Group in affiliation with NEMA

Copyright National Electrical Manufacturers Association
Provided by IHS under license with NEMA
No reproduction or networking permitted without license from IHS
Not for Resale

175 Watt M57 Metal Halide Lamp

1 LAMP SPECIFICATIONS

1.1 Lamp Designations and Descriptions

Designation	Bulb	Maximum Outline Drawing	Base
M57/E	ED17 (ED54) or B17 (B54)	Fig. 1	E26/24 Medium Screw
M57/O	ED17 (ED54) or B17 (B54)	Fig. 2	E26/24 Medium Screw
M57/E	PAR38 (PAR121)	Fig. 13	E26/50x39 Medium Skirt
M57/O	PAR38 (PAR121)	Fig. 13	E26/50x39 Medium Skirt
M57/E	BT28 (BT90) or ED28 (ED75)	Fig. 8	E39 Mogul screw
M57/O	BT28 (BT90) or ED28 (ED75)	Fig. 8	EX39 Mogul Exclusionary
M57/E	BT28 (BT90) or ED28 (ED75)	Fig. 8	EP39 Mogul Position Oriented

1.2 Lamp Physical Characteristics

	M57/E or M57/O	*M57/O or M57/E*	*M57/E M57/E*	*M57/O*
Bulb	B17 (B54) or E17 (E54)	PAR38 (PAR121)	BT28 (BT75) or ED28 (ED75)	BT28 (BT75) or ED28 (ED75)
Base	E26/24	E26/50x39[1]	E39/EP39	EX39
Nominal diameter [1]	54 (2.13)	121 (4.75)	90.0 (3.50)	90.0 (3.50)
Maximum overall length (MOL) [1]	138 (5.43)	138 (5.43)	211 (8.31)	211 (8.31)
Light center length (LCL) [1]	86 ± 3 (3.39 ± 0.12)	NA	127 ± 5 (5 ± 0.2)	127 ± 5 (5 ± 0.2)
Effective arc length [1]	21 - 29 (0.82 – 1.1)	NA	21 - 29 (0.82 – 1.1)	21 - 29 (0.82 – 1.1)
Maximum electrode tip deviation [2]	3	NA	3	3
Maximum permissible bulb temperature [3]	400 (752)	350 (662)	400 (752)	400 (752)
Maximum permissible base temperature [3]	210 (410)	190 (374)	210 (410)	210 (410)

[1] Dimensions are in mm, with equivalent inches within parentheses
[2] Maximum electrode tip deviation is from base axis (apex at base eyelet), measured in degrees
[3] Temperatures are in ºC, with equivalent ºF within parentheses

1.3 Operating Requirements at 100 hours

	Min	Nom	Max
Voltage at lamp terminals (V, rms)	117	132	147
Lamp current (A, rms)		1.5	
Lamp wattage (W)		175	

[1] The PAR 38 lamp will not fit into a medium exclusionary EX26 lampholder.

Copyright 2005 © American National Standard Lighting Group in affiliation with NEMA

Copyright National Electrical Manufacturers Association
Provided by IHS under license with NEMA
No reproduction or networking permitted without license from IHS
Not for Resale

1.4 Lamp Reignition Voltage Spike (Vrs) During Warm-up

Maximum Reignition Voltage Spike ..... 150 volts, peak

Electrical Conditions:
Supply voltage ..... 340 volts
Ballast short circuit current ..... 1.9 amperes
Impedance ..... 179.0 ohms

1.5 Lamp Reignition Voltage (Vr) During Steady Operation

Maximum Reignition Voltage ..... 250 volts

1.6 Lamp Starting Voltage and Warm up Requirements

1.6.1 Lamp Starting Voltage Requirements as a function of time and temperature

Lamps shall start within the time specified at the ambient temperature indicated under the following test conditions:

Temperature	*Minimum OCV*		*Time*	*Probability of starting within the time specified*
	Vrms	*Vpeak*		
10°C ± 1°C (50°F ± 2°F)	350	495	120 s	98% of 0-hour lamps
-30°C ± 1°C (-22°F ± 2°F)	382	540	120 s	90% of 100-hour lamps

1.6.2 Lamp Warm-Up Requirements

Time to 95% of minimum lamp operating voltage..... 10 minutes

1.7 Reference Ballast Characteristics

Rated input voltage..... 220 V
Reference current..... 1.5 A
Impedance..... 102 Ω

2 DATA FOR BALLAST DESIGN

2.1 Requirements for Lag Ballast

2.1.1 For Lamp Not Requiring an External Ignitor

Temperature	*Minimum OCV*		*Time*	*Probability of starting within the time specified*
	Vrms	*Vpeak*		
10°C ± 1°C (50°F ± 2°F)	350	495	120 s	98% of 0-hour lamps
-30°C ± 1°C (-22°F ± 2°F)	382	540	120 s	90% of 100-hour lamps

2. 2 Requirements for Peak Lead Ballasts

2.2.1 For Lamps not Requiring an External Ignitor

Temperature	Minimum OCV		Time	*Probability of starting within the time specified*
	Volts,rms	*Crest factor*		
10°C ± 1°C (50°F ± 2°F)	250*	2.0	120 s	98% for 0-h lamps
-30°C ± 1°C (-22°F ± 2°F)	280**	2.0	120 s	90% for 100-h lamps

*The rms open-circuit voltage may be reduced by 10 volts for each 0.1 increase of the voltage crest factor, down to 230 volts rms, as the lowest value.

Copyright 2005 © American National Standard Lighting Group in affiliation with NEMA

Copyright National Electrical Manufacturers Association
Provided by IHS under license with NEMA
No reproduction or networking permitted without license from IHS
Not for Resale

**The rms open-circuit voltage may be reduced by 10 volts for each 0.1 increase in the voltage crest factor, down to 260 volts rms, as the lowest value.

2.2.3 Current Waveshape Characteristic Requirements for Peak Lead Ballasts

Current slope (di/dt), minimum…… 0.65 amperes per millisecond
Off time (OT), maximum…… 2.75 milliseconds
Peak Current, maximum…… 3.8 amperes
Overshoot (OS), maximum…… 45 milliamperes

2.2.4 Minimum Sustaining Voltage (Vss) for Peak Lead Ballasts

Minimum Sustaining Voltage (Vss)							
	Current Slope (di/dt), amperes per millisecond, at I=0						
Off-time (milliseconds)	0.65	0.7	0.9	1.1	1.3	1.5	-
2.75	283	277	254	231	208	185	-
2.50	276	270	247	220	201	178	-
2.25	268	262	240	217	194	171	-
2.00	261	256	233	210	187	164	-
1.75	254	248	225	202	179	156	-
1.50	247	241	218	195	172	149	-

The values given in this table are derived from the equation: $Vss = C_1 + C_2 (OT) – C_3 (di/dt)$ where:

Vss = minimum sustaining voltage in volts, (rms)
OT = Off-time in milliseconds
di/dt = Current slope at I=0 in amperes per millisecond
C1 = 278 C2 = 29 C3 = 115

2.3 Ignitor Requirements - NA

2.4 Starting Current Requirements

	Lag ballasts	Peak-lead ballasts
Minimum starting current, A rms	1.5	1.5
Maximum starting current, A rms	2.5	2.5

2.5 Current Crest Factor

Maximum Current Crest Factor …….. 1.8

2.6 Maximum Voltage across Lamp Terminals

RMS	Peak	Peak Pulse
528	1100	NA

2.7 Lamp Operating Wattage

Design Center……. 175 watts

Range, 100-hour lamps…… 140 to 210 watts

3 INFORMATION FOR LUMINAIRE DESIGN ("CAUTION" of 7 (Part I) applies)

3.1 Voltage Rise, Luminaire Effect Limit

Lamp voltage change……. 5 volts, rms

Copyright 2005 © American National Standard Lighting Group in affiliation with NEMA

Copyright National Electrical Manufacturers Association
Provided by IHS under license with NEMA
No reproduction or networking permitted without license from IHS
Not for Resale

175 Watt M152 Pulse-Start Metal-Halide Lamp

1 LAMP SPECIFICATIONS

1.1 Lamp Designations and Descriptions

Designation	Bulb	Maximum Outline Drawing	Base
M152/E	BT28 (BT90) or ED28 (ED75)	Fig. 8	E39 Mogul screw
M152/E	B17 (B54) or ED17 (ED54)	Fig. 1	E26/24 Medium Screw

1.2 Lamp Physical Characteristics

	M152/E	*M152/E*
Bulb	BT28 (BT75) or ED28 (ED75)	B17 (B54) or E17 (E54)
Base	E39	E26/24
Nominal diameter [1]	90.0 (3.50)	54 (2.13)
Maximum overall length (MOL) [1]	211 (8.31)	138 (5.43)
Light center length (LCL) [1]	127 ± 5 (5 ± 0.2)	86 ± 3 (3.39 ± 0.12)
Effective arc length [1]	20 - 30 (0.79 – 1.1)	20 - 30 (0.79 – 1.1)
Maximum electrode tip deviation [2]	3	3
Maximum permissible bulb temperature [3]	400 (752)	400 (752)
Maximum permissible base temperature [3]	210 (410)	210 (410)

[1] Dimensions are in mm, with equivalent inches within parentheses
[2] Maximum electrode tip deviation is from base axis (apex at base eyelet), measured in degrees
[3] Temperatures are in ºC, with equivalent ºF within parentheses

1.3 Operating Requirements at 100 hours

	Min	Nom	Max
Voltage at lamp terminals (V, rms)	117	132	147
Lamp current (A, rms)		1.5	
Lamp wattage (W)		175	

Copyright 2005 © American National Standard Lighting Group in affiliation with NEMA

Copyright National Electrical Manufacturers Association
Provided by IHS under license with NEMA
No reproduction or networking permitted without license from IHS
Not for Resale

1.4 Lamp Reignition Voltage Spike (Vrs) During Warm-up

Maximum Reignition Voltage Spike ..... 150 volts, peak

Electrical Conditions:
Supply voltage ..... 340 volts
Ballast short circuit current ..... 1.9 amperes
Impedance ..... 179.0 ohms

1.5 Lamp Reignition Voltage (Vr) During Steady Operation

Maximum Reignition Voltage ..... 270 volts

1.6 Lamp Starting Voltage and Warm up Requirements

1.6.1 Lamp Starting Voltage Requirements as a function of time and temperature

Lamps shall start within the time specified at the ambient temperature indicated when the minimum open-circuit test voltages and the minimum starting pulse, Sec. 2.3, are applied.

Temperature	*Minimum OCV*		*Time*	*Probability of starting within the time specified*
	Vrms	*Vpeak*		
10°C ± 1°C (50°F ± 2°F)	254	359	120 s	98% of 0-hour lamps
-30°C ± 1°C (-22°F ± 2°F)	254	359	120 s	90% of 100-hour lamps

1.6.2 Lamp Warm-Up Requirements

Time to 95% of minimum lamp operating voltage..... 10 minutes

1.7 Reference Ballast Characteristics

Rated input voltage..... 220 V
Reference current..... 1.5 A
Impedance..... 102 Ω

2 DATA FOR BALLAST DESIGN

2.1 Requirements for Lag Ballast

2.1.2 For Lamps Requiring an External Ignitor

Temperature	*Minimum OCV*[1]		*Time*	*Probability of starting within the time specified*
	Vrms	*Vpeak*		
10°C ± 1°C (50°F ± 2°F)	254	345[#]	120 s	98% of 0-hour lamps
-30°C ± 1°C (-22°F ± 2°F)	254	345	120 s	90% of 100-hour lamps

[1] OCV (open circuit voltage) is measured with the ignitor removed from the circuit at minimum line conditions.

2. 2 Requirements for Peak Lead Ballasts

[#] 345V is lower than the product of 1.414 and Vrms to accommodate magnetic regulated ballasts.

Copyright 2005 © American National Standard Lighting Group in affiliation with NEMA

Copyright National Electrical Manufacturers Association
Provided by IHS under license with NEMA
No reproduction or networking permitted without license from IHS
Not for Resale

2.2.2 For Lamps Requiring an External Ignitor

	Minimum OCV[1]			
Temperature	*Vrms*	*Peak Volts*	Time	*Probability of starting within the time specified*
10°C ± 1°C (50°F ± 2°F)	254	483	120 s	98% for 0-h lamps
-30°C ± 1°C (-22°F ± 2°F)	254	483	120 s	90% for 100-h lamps

[1] OCV (open circuit voltage) is measured with the ignitor removed from the circuit at minimum line conditions.

2.2.3 Current Waveshape Characteristic Requirements for Peak Lead Ballasts

Off time (OT), maximum…… 2.3 milliseconds
Peak Current, maximum…… 3.8 amperes
Overshoot (OS), maximum…… 45 milliamperes

2.2.4 Minimum Sustaining Voltage (Vss) for Peak Lead Ballasts

Sustaining Voltage (Vss) Minimum: 270 V

The ballast shall meet this value at minimum rated input voltage for reliable lamp operation during warm-up and through life.

2.3 Ignitor Requirements

(a) Minimum pulse height, kV..... 3.0
(b) Maximum pulse height, kV..... 4.0
(c) Minimum pulse width, µs @ kV..... 1.3 @ 2.7
(d) Minimum pulse repetition rate per half cycle 1
(e) Pulse position(s) for lag circuit ballasts ..... 64°-110°, 244°-290°
(f) Pulse position(s) for lead circuit ballasts ..... During the period when the OCV exceeds 90% peak.

2.4 Starting Current Requirements

	Lag ballasts	Peak-lead ballasts
Minimum starting current, A rms	1.5	1.5
Maximum starting current, A rms	2.3	2.3

2.5 Current Crest Factor

Maximum Current Crest Factor ……1.8

2.6 Maximum Voltage across Lamp Terminals

RMS	Peak	Peak Pulse
528	1100	4000

2.7 Lamp Operating Wattage

Design Center…….. 175 watts

Range, 100-hour lamps…… 140 to 210 watts

3 INFORMATION FOR LUMINAIRE DESIGN ("CAUTION" of 7 (Part I) applies)

3.1 Voltage Rise, Luminaire Effect Limit

Lamp voltage change…….. 5 volts, rms

Copyright 2005 © American National Standard Lighting Group in affiliation with NEMA

Copyright National Electrical Manufacturers Association
Provided by IHS under license with NEMA
No reproduction or networking permitted without license from IHS
Not for Resale

250 Watt M58 Metal Halide Lamp

1 LAMP SPECIFICATIONS

1.1 Lamp Designations and Descriptions

Designation	Bulb	Max. Outline Drawing	Base
M58/E	T15 (T48)	Fig. 5	E39 Mogul screw
M58/E	E18 (E57)	Fig. 6	E39 Mogul screw
M58/E	BT28 (BT90) or ED28 (ED75)	Fig. 8	E39 Mogul screw
M58/O	BT28 (BT90) or ED28 (ED75)	Fig. 8	EX39 Mogul Exclusionary
M58/E	BT28 (BT90) or ED28 (ED75)	Fig. 8	EP39 Mogul Position Oriented

1.2 Lamp Physical Characteristics

	M58/E	*M58/E*	*M58/E M58/E*	*M58/O*
Bulb	T15 (T48)	E18 (E57)	BT28 (BT75) or ED28 (ED75)	BT28 (BT75) or ED28 (ED75)
Base	E39	E39	E39/EP39	EX39
Nominal diameter [1]	48 (1.875)	57 (2.25)	90.0 (3.50)	90.0 (3.50)
Maximum overall length (MOL) [1]	248 (9.76)	248 (9.76)	211 (8.31)	211 (8.31)
Light center length (LCL) [1]	146 ± 3 (5.75 ± 0.12)	146 ± 3 (5.75 ± 0.12)	127 ± 5 (5 ± 0.2)	127 ± 5 (5 ± 0.2)
Effective arc length [1]	29.5 – 37.5 (1.2 - 1.5)	29.5 – 37.5 (1.2 - 1.5)	29.5 – 37.5 (1.2 - 1.5)	29.5 – 37.5 (1.2 - 1.5)
Maximum electrode tip deviation [2]	3	3	3	3
Maximum permissible bulb temperature [3]	400 (752)	400 (752)	400 (752)	400 (752)
Maximum permissible base temperature [3]	210 (410)	210 (410)	210 (410)	210 (410)

[1] Dimensions are in mm, with equivalent inches within parentheses
[2] Maximum electrode tip deviation is from base axis (apex at base eyelet), measured in degrees
[3] Temperatures are in ºC, with equivalent ºF within parentheses

1.3 Operating Requirements at 100 Hours

	Min	Nom	Max
Voltage at lamp terminals (V, rms)	118	133	148
Lamp current (A, rms)		2.1	
Lamp wattage (W)		250	

Copyright 2005 © American National Standard Lighting Group in affiliation with NEMA

Copyright National Electrical Manufacturers Association
Provided by IHS under license with NEMA
No reproduction or networking permitted without license from IHS
Not for Resale

1.4 Lamp Reignition Voltage Spike (Vrs) During Warm-up

Maximum Reignition Voltage Spike..…….. 150 volts, peak

Electrical Conditions:
Supply voltage..…….. 340 volts
Ballast short circuit current …… 2.5 amperes
Impedance …… 136.0 ohms

1.5 Lamp Reignition Voltage (Vr) During Steady Operation

Maximum Reignition Voltage.....……... 250 volts

1.6 Lamp Starting Voltage Requirements

1.6.1 Lamp Starting Voltage Requirements as a Function of Time and Temperature

Lamps shall start within the time specified at the ambient temperature indicated under the following test conditions:

Temperature	*Minimum OCV*		*Time*	*Probability of starting within the time specified*
	Vrms	*Vpeak*		
10°C ± 1°C (50°F ± 2°F)	350	495	120 s	98% of 0-hour lamps
-30°C ± 1°C (-22°F ± 2°F)	382	540	120 s	90% of 100-hour lamps

1.6.2 Lamp Warm-Up Requirements

Time to 95% of minimum lamp operating voltage……. 10 minutes

1.7 Reference Ballast Characteristics

Rated input voltage……. 220 V
Reference current…… 2.1 A
Impedance…… 74 Ω

2 DATA FOR BALLAST DESIGN

2.1 Requirements for Lag Ballast

2.1.1 For Lamps Not Requiring an External Ignitor

Temperature	*Minimum OCV*		*Time*	*Probability of starting within the time specified*
	Vrms	*Vpeak*		
10°C ± 1°C (50°F ± 2°F)	350	495	120 s	98% of 0-hour lamps
-30°C ± 1°C (-22°F ± 2°F)	382	540	120 s	90% of 100-hour lamps

2.2 Requirements for Peak Lead Ballasts

2.2.1 For Lamps not Requiring an External Ignitor

Temperature	Minimum OCV		Time	*Probability of starting within the time specified*
	Volts,rms	*Crest factor*		
10°C ± 1°C (50°F ± 2°F)	270*	1.8	120 s	98% for 0-h lamps
-30°C ± 1°C (-22°F ± 2°F)	300**	1.8	120 s	90% for 100-h lamps

*The rms open-circuit voltage may be reduced by 10 volts for each 0.1 increase of the voltage crest factor, down to 230 volts rms, as the lowest value.

Copyright 2005 © American National Standard Lighting Group in affiliation with NEMA

Copyright National Electrical Manufacturers Association
Provided by IHS under license with NEMA
No reproduction or networking permitted without license from IHS
Not for Resale

** The rms open-circuit voltage may be reduced by 10 volts for each 0.1 increase in the voltage crest factor, down to 260 volts rms, as the lowest value.

2.2.3 Current Waveshape Characteristic Requirements for Peak Lead Ballasts

Current slope (di/dt), minimum…… 0.8 amperes per millisecond
Off time (OT), maximum…….. 2.75 milliseconds
Peak Current, maximum…….. 5.0 amperes
Overshoot (OS), maximum…….. 75 milliamperes

2.2.4 Minimum Sustaining Voltage (Vss) for Peak Lead Ballasts

Minimum Sustaining Voltage (Vss)							
	Current Slope (di/dt), amperes per millisecond, at I=0						
Off-time (milliseconds)	0.8	1.0	1.2	1.4	1.6	1.8	-
2.75	266	243	220	197	174	151	-
2.50	259	236	213	190	167	144	-
2.25	251	228	205	182	159	136	-
2.00	244	221	198	175	152	129	-
1.75	237	214	191	168	145	122	-
1.50	230	207	184	161	138	115	-

The values given in this table are derived from the equation: $Vss = C_1 + C_2 (OT) – C_3 (di/dt)$ where:

Vss = minimum sustaining voltage in volts, (rms)
OT = Off-time in milliseconds
di/dt = Current slope at I=0 in amperes per millisecond
C1 = 278 C2 = 29 C3 = 115

2.3 Ignitor Requirements - NA

2.4 Starting Current Requirements

	Lag ballasts	Peak-lead ballasts
Minimum starting current, A rms	2.1	2.1
Maximum starting current, A rms	3.5	3.5

2.5 Current Crest Factor

Maximum Current Crest Factor …….. 1.8

2.6 Maximum Voltage across Lamp Terminals

RMS	Peak	Peak Pulse
528	1100	NA

2.7 Lamp Operating Wattage

Design Center……. 250 watts

Range, 100-hour lamps…… 200 to 300 watts

3 INFORMATION FOR LUMINAIRE DESIGN (“CAUTION” of 7 (Part I) applies)

3.1 Voltage Rise, Luminaire Effect Limit

Lamp voltage change……. 5 volts, rms

Copyright 2005 © American National Standard Lighting Group in affiliation with NEMA

Copyright National Electrical Manufacturers Association
Provided by IHS under license with NEMA
No reproduction or networking permitted without license from IHS
Not for Resale

250 Watt M153 Pulse-Start Metal-Halide Lamp

1 LAMP SPECIFICATIONS

1.1 Lamp Designations and Descriptions

Designation	Bulb	Maximum Outline Drawing	Base
M153/E	BT28 (BT90) or ED28 (ED75)	Fig. 8	E39 Mogul Screw
M153/O	BT28 (BT90) or ED28 (ED75)	Fig. 8	EX39 Mogul Exclusionary

1.2 Lamp Physical Characteristics

	M153/E *M153/O*
Bulb	BT28 (BT75) or ED28 (ED75)
Base	E39 for /E EX39 for /O
Nominal diameter [1]	90.0 (3.50)
Maximum overall length (MOL) [1]	211 (8.31)
Light center length (LCL) [1]	127 ± 5 (5 ± 0.2)
Effective arc length [1]	28.5 – 38.5 (1.29 – 1.33)
Maximum electrode tip deviation [2]	3
Maximum permissible bulb temperature [3]	400 (752)
Maximum permissible base temperature [3]	210 (410)

[1] Dimensions are in mm, with equivalent inches within parentheses
[2] Maximum electrode tip deviation is from base axis (apex at base eyelet), measured in degrees
[3] Temperatures are in ºC, with equivalent ºF within parentheses

1.3 Operating Requirements at 100 hours

	Min	Nom	Max
Voltage at lamp terminals (V, rms)	118	133	148
Lamp current (A, rms)		2.1	
Lamp wattage (W)		250	

Copyright 2005 © American National Standard Lighting Group in affiliation with NEMA

Copyright National Electrical Manufacturers Association
Provided by IHS under license with NEMA
No reproduction or networking permitted without license from IHS
Not for Resale

1.4 Lamp Reignition Voltage Spike (Vrs) During Warm-up

Maximum Reignition Voltage Spike ..... 150 volts, peak

Electrical Conditions:
Supply voltage ..... 340 volts
Ballast short circuit current ..... 2.5 amperes
Impedance ..... 136.0 ohms

1.5 Lamp Reignition Voltage (Vr) During Steady Operation

Maximum Reignition Voltage ..... 270 volts

1.6 Lamp Starting Voltage and Warm up Requirements

1.6.1 Lamp Starting Voltage Requirements as a function of time and temperature

Lamps shall start within the time specified at the ambient temperature indicated when the minimum open-circuit test voltages and the minimum starting pulse, Sec. 2.3, are applied.

Temperature	*Minimum OCV*		*Time*	*Probability of starting within the time specified*
	Vrms	*Vpeak*		
10°C ± 1°C (50°F ± 2°F)	254	359	120 s	98% of 0-hour lamps
-30°C ± 1°C (-22°F ± 2°F)	254	359	120 s	90% of 100-hour lamps

1.6.2 Lamp Warm-Up Requirements

Time to 95% of minimum lamp operating voltage..... 10 minutes

1.7 Reference Ballast Characteristics

Rated input voltage..... 220 V
Reference current..... 2.1 A
Impedance..... 74 Ω

2 DATA FOR BALLAST DESIGN

2.1 Requirements for Lag Ballast

2.1.2 For Lamps Requiring an External Ignitor

Temperature	*Minimum OCV*[1]		*Time*	*Probability of starting within the time specified*
	Vrms	*Vpeak*		
10°C ± 1°C (50°F ± 2°F)	254	345[#]	120 s	98% of 0-hour lamps
-30°C ± 1°C (-22°F ± 2°F)	254	345	120 s	90% of 100-hour lamps

[1] OCV (open circuit voltage) is measured with the ignitor removed from the circuit at minimum line conditions.

2. 2 Requirements for Peak Lead Ballasts

[#] 345V is lower than the product of 1.414 and Vrms to accommodate magnetic regulated ballasts.

Copyright 2005 © American National Standard Lighting Group in affiliation with NEMA

Copyright National Electrical Manufacturers Association
Provided by IHS under license with NEMA
No reproduction or networking permitted without license from IHS
Not for Resale

2.2.2 For Lamps Requiring an External Ignitor

	Minimum OCV[1]			
Temperature	*Vrms*	*Peak Volts*	Time	*Probability of starting within the time specified*
10°C ± 1°C (50°F ± 2°F)	254	483	120 s	98% for 0-h lamps
-30°C ± 1°C (-22°F ± 2°F)	254	483	120 s	90% for 100-h lamps

[1] OCV (open circuit voltage) is measured with the ignitor removed from the circuit at minimum line conditions.

2.2.3 Current Waveshape Characteristic Requirements for Peak Lead Ballasts

Off time (OT), maximum…… 2.3 milliseconds
Peak Current, maximum…… 5.0 amperes
Overshoot (OS), maximum…… 75 milliamperes

2.2.4 Minimum Sustaining Voltage (Vss) for Peak Lead Ballasts

Sustaining Voltage (Vss) Minimum: 270 V

The ballast shall meet this value at minimum rated input voltage for reliable lamp operation during warm-up and through life.

2.3 Ignitor Requirements

(a) Minimum pulse height, kV..... 3.0
(b) Maximum pulse height, kV..... 4.0
(c) Minimum pulse width, µs @ kV..... 1.3 @ 2.7
(d) Minimum pulse repetition rate per half cycle 1
(e) Pulse position(s) for lag circuit ballasts ..... 64°-110°, 244°-290°
(f) Pulse position(s) for lead circuit ballasts ..... During the period when the OCV exceeds 90% peak.

2.4 Starting Current Requirements

	Lag ballasts	Peak-lead ballasts
Minimum starting current, A rms	2.1	2.1
Maximum starting current, A rms	3.2	3.2

2.5 Current Crest Factor

Maximum Current Crest Factor ……1.8

2.6 Maximum Voltage across Lamp Terminals

RMS	Peak	Peak Pulse
528	1100	4000

2.7 Lamp Operating Wattage

Design Center……. 250 watts

Range, 100-hour lamps…… 200 to 300 watts

3 INFORMATION FOR LUMINAIRE DESIGN ("CAUTION" of 7 (Part I) applies)

3.1 Voltage Rise, Luminaire Effect Limit

Lamp voltage change……. 5 volts, rms

Copyright 2005 © American National Standard Lighting Group in affiliation with NEMA

Copyright National Electrical Manufacturers Association
Provided by IHS under license with NEMA
No reproduction or networking permitted without license from IHS
Not for Resale

320 Watt M154 Pulse-Start Metal-Halide Lamp

1 LAMP SPECIFICATIONS

1.1 Lamp Designations and Descriptions

Designation	Bulb	Maximum Outline Drawing	Base
M154/E	BT28 (BT90) or ED28 (ED75)	Fig. 8	E39 Mogul Screw
M154/O	BT28 (BT90) or ED28 (ED75)	Fig. 8	EX39 Mogul Exclusionary
M154/E	BT37 (BT118) or ED37 (ED118)	Fig. 9	E39 Mogul Screw
M154/O	BT37 (BT118) or ED37 (ED118)	Fig. 9	EX39 Mogul Exclusionary

1.2 Lamp Physical Characteristics

	M154/O M154/E	*M154/O M154/E*
Bulb	BT28 (BT75) ED28 (ED75)	BT37 (BT118) ED37 (ED118)
Base	E39 for /E EX39 for /O	E39 for /E EX39 for /O
Nominal diameter [1]	90.0 (3.50)	118 (4.6)
Maximum overall length (MOL) [1]	211 (8.31)	292 (11.5)
Light center length (LCL) [1]	127 ± 5 (5 ± 0.2)	178 ± 6 (7 ± 0.24)
Effective arc length [1]	24 – 38 (0.94 – 1.50)	24 – 38 (0.94 – 1.50)
Maximum electrode tip deviation [2]	3	3
Maximum permissible bulb temperature [3]	400 (752)	400 (752)
Maximum permissible base temperature [3]	210 (410)	210 (410)

[1] Dimensions are in mm, with equivalent inches within parentheses
[2] Maximum electrode tip deviation is from base axis (apex at base eyelet), measured in degrees
[3] Temperatures are in ºC, with equivalent ºF within parentheses

1.3 Operating Requirements at 100 hours

	Min	Nom	Max
Voltage at lamp terminals (V, rms)	120	135	150
Lamp current (A, rms)		2.63	
Lamp wattage (W)		320	

Copyright 2005 © American National Standard Lighting Group in affiliation with NEMA

Copyright National Electrical Manufacturers Association
Provided by IHS under license with NEMA
No reproduction or networking permitted without license from IHS
Not for Resale

1.4 Lamp Reignition Voltage Spike (Vrs) During Warm-up

Maximum Reignition Voltage Spike ..... 150 volts, peak

Electrical Conditions:
Supply voltage ..... 350 volts
Ballast short circuit current ..... 3.89 amperes
Impedance ..... 90 ohms

1.5 Lamp Reignition Voltage (Vr) During Steady Operation

Maximum Reignition Voltage 270V

1.6 Lamp Starting Voltage and Warm up Requirements

1.6.1 Lamp Starting Voltage Requirements as a function of time and temperature

Lamps shall start within the time specified at the ambient temperature indicated when the minimum open-circuit test voltages and the minimum starting pulse, Sec. 2.3, are applied.

Temperature	*Minimum OCV*		*Time*	*Probability of starting within the time specified*
	Vrms	*Vpeak*		
10°C ± 1°C (50°F ± 2°F)	254	359	120 s	98% of 0-hour lamps
-30°C ± 1°C (-22°F ± 2°F)	254	359	120 s	90% of 100-hour lamps

1.6.2 Lamp Warm-Up Requirements

Time to 95% of minimum lamp operating voltage..... 10 minutes

1.7 Reference Ballast Characteristics

Rated input voltage..... 220 V
Reference current..... 2.63 A
Impedance..... 55 Ω

2 DATA FOR BALLAST DESIGN

2.1 Requirements for Lag Ballast

2.1.2 For Lamps Requiring an External Ignitor

Temperature	*Minimum OCV*[1]		*Time*	*Probability of starting within the time specified*
	Vrms	*Vpeak*		
10°C ± 1°C (50°F ± 2°F)	254	345[#]	120 s	98% of 0-hour lamps
-30°C ± 1°C (-22°F ± 2°F)	254	345	120 s	90% of 100-hour lamps

[1] OCV (open circuit voltage) is measured with the ignitor removed from the circuit at minimum line conditions.

2. 2 Requirements for Peak Lead Ballasts

2.2.2 For Lamps Requiring an External Ignitor

[#] 345V is lower than the product of 1.414 and Vrms to accommodate magnetic regulated ballasts.

Copyright 2005 © American National Standard Lighting Group in affiliation with NEMA

Copyright National Electrical Manufacturers Association
Provided by IHS under license with NEMA
No reproduction or networking permitted without license from IHS
Not for Resale

Temperature	Minimum OCV[1] *Vrms*	*Peak Volts*	Time	*Probability of starting within the time specified*
10°C ± 1°C (50°F ± 2°F)	254	483	120 s	98% for 0-h lamps
-30°C ± 1°C (-22°F ± 2°F)	254	483	120 s	90% for 100-h lamps

[1] OCV (open circuit voltage) is measured with the ignitor removed from the circuit at minimum line conditions.

2.2.3 Current Waveshape Characteristic Requirements for Peak Lead Ballasts

Off time (OT), maximum…… 2.3 milliseconds
Peak Current, maximum…… 7.0 amperes
Overshoot (OS), maximum…… 80 milliamperes

2.2.4 Minimum Sustaining Voltage (Vss) for Peak Lead Ballasts

Sustaining Voltage (Vss) Minimum: 270 V

The ballast shall meet this value at minimum rated input voltage for reliable lamp operation during warm-up and through life.

2.3 Ignitor Requirements

(a) Minimum pulse height, kV..... 3.0
(b) Maximum pulse height, kV..... 4.0
(c) Minimum pulse width, µs @ kV..... 1.3 @ 2.7
(d) Minimum pulse repetition rate per half cycle 1
(e) Pulse position(s) for lag circuit ballasts ..... 64°-110°, 244°-290°
(f) Pulse position(s) for lead circuit ballasts ..... During the period when the OCV exceeds 90% peak.

2.4 Starting Current Requirements

	Lag ballasts	Peak-lead ballasts
Minimum starting current, A rms	2.63	2.63
Maximum starting current, A rms	4.0	4.0

2.5 Current Crest Factor

Maximum Current Crest Factor ……1.8

2.6 Maximum Voltage across Lamp Terminals

RMS	Peak	Peak Pulse
528	1100	4000

2.7 Lamp Operating Wattage

Design Center…… 320 watts

Range, 100-hour lamps…… 256 to 384 watts

3.0 INFORMATION FOR LUMINAIRE DESIGN ("CAUTION" of 7 (Part I) applies)

3.1 Voltage Rise, Luminaire Effect Limit

Lamp voltage change…… 5 volts, rms

Copyright 2005 © American National Standard Lighting Group in affiliation with NEMA

Copyright National Electrical Manufacturers Association
Provided by IHS under license with NEMA
No reproduction or networking permitted without license from IHS
Not for Resale

350 Watt M131 Pulse-Start Metal-Halide Lamp

1 LAMP SPECIFICATIONS

1.1 Lamp Designations and Descriptions

Designation	Bulb	Maximum Outline Drawing	Base
M131/E	ED/BT28 (ED/BT90)	Fig. 8	E39 Mogul Screw
M131/O	ED/BT28 (ED/BT90)	Fig. 8	EX39 Mogul Exclusionary
M131/E	ED/BT37 (ED/BT118)	Fig. 9	E39 Mogul Screw
M131/O	ED/BT37 (ED/BT118)	Fig. 9	EX39 Mogul Exclusionary

1.2 Lamp Physical Characteristics

	M131/E	*M131/O*	*M131/E*	*M131/O*
Bulb	BT28 (BT90) ED28 (ED90)	BT28 (BT90) ED28 (ED90)	BT37 (BT118) ED37 (ED118)	BT37 (BT118) ED37 (ED118)
Base	E39	EX39	E39	EX39
Nominal diameter [1]	90.0 (3.50)	90.0 (3.50)	118 (4.62)	118 (4.62)
Maximum overall length (MOL) [1]	211 (8.31)	211 (8.31)	292 (11.5)	292 (11.5)
Light center length (LCL) [1]	127 ± 5 (5 ± 0.2)	127 ± 5 (5 ± 0.2)	178 ± 6 (7 ± 0.24)	178 ± 6 (7 ± 0.24)
Effective arc length [1]	32 – 42 (1.3 – 1.7)	32 – 42 (1.3 – 1.7)	32 – 42 (1.3 – 1.7)	32 – 42 (1.3 – 1.7)
Maximum electrode tip deviation [2]	3	3	3	3
Maximum permissible bulb temperature [3]	400 (752)[4]	400 (752)[4]	400 (752)	400 (752)
Maximum permissible base temperature [3]	210 (410)[5]	210 (410)[5]	210 (410)	210 (410)

[1] Dimensions are in mm, with equivalent inches within parentheses
[2] Maximum electrode tip deviation is from base axis (apex at base eyelet), measured in degrees
[3] Temperatures are in ºC, with equivalent ºF within parentheses
[4] Some manufacturers rate bulb temperature at values up to 450ºC (842ºF)
[5] Some manufacturers rate base temperature at values up to 230ºC (446ºF)

1.3 Operating Requirements at 100 hours

	Min	Nom	Max
Voltage at lamp terminals (V, rms)	120	135	150
Lamp current (A, rms)		2.8	
Lamp wattage (W)		350	

1.4 Lamp Reignition Voltage Spike (Vrs) During Warm-up

Copyright 2005 © American National Standard Lighting Group in affiliation with NEMA

Copyright National Electrical Manufacturers Association
Provided by IHS under license with NEMA
No reproduction or networking permitted without license from IHS
Not for Resale

Maximum Reignition Voltage Spike …… 150 volts, peak

Electrical Conditions:
Supply voltage …… 350 volts
Ballast short circuit current …… 3.4 amperes
Impedance …… 89.1 ohms

1.5 Lamp Reignition Voltage (Vr) During Steady Operation

Maximum Reignition Voltage …… 270 volts

1.6 Lamp Starting Voltage and Warm up Requirements

1.6.1 Lamp Starting Voltage Requirements as a function of time and temperature

Lamps shall start within the time specified at the ambient temperature indicated when the minimum open-circuit test voltages and the minimum starting pulse, Sec. 2.3, are applied.

Temperature	*Minimum OCV*		*Time*	*Probability of starting within the time specified*
	Vrms	*Vpeak*		
10°C ± 1°C (50°F ± 2°F)	254	359	120 s	98% of 0-hour lamps
-30°C ± 1°C (-22°F ± 2°F)	254	359	120 s	90% of 100-hour lamps

1.6.2 Lamp Warm-Up Requirements

Time to 95% of minimum lamp operating voltage……. 10 minutes

1.7 Reference Ballast Characteristics

Rated input voltage……. 220 V
Reference current…… 2.8 A
Impedance…… 52.7 Ω

2 DATA FOR BALLAST DESIGN

2.1 Requirements for Lag Ballast

2.1.2 For Lamps Requiring an External Ignitor

Temperature	*Minimum OCV [1]*		*Time*	*Probability of starting within the time specified*
	Vrms	*Vpeak*		
10°C ± 1°C (50°F ± 2°F)	254	345[#]	120 s	98% of 0-hour lamps
-30°C ± 1°C (-22°F ± 2°F)	254	345	120 s	90% of 100-hour lamps

[1] OCV (open circuit voltage) is measured with the ignitor removed from the circuit at minimum line conditions.

2. 2 Requirements for Peak Lead Ballasts

[#] 345V is lower than the product of 1.414 and Vrms to accommodate magnetic regulated ballasts.

Copyright 2005 © American National Standard Lighting Group in affiliation with NEMA

Copyright National Electrical Manufacturers Association
Provided by IHS under license with NEMA
No reproduction or networking permitted without license from IHS
Not for Resale

2.2.2 For Lamps Requiring an External Ignitor

Temperature	Minimum OCV [1] *Vrms*	*Peak Volts*	Time	*Probability of starting within the time specified*
10°C ± 1°C (50°F ± 2°F)	254	483	120 s	98% for 0-h lamps
-30°C ± 1°C (-22°F ± 2°F)	254	483	120 s	90% for 100-h lamps

[1] OCV (open circuit voltage) is measured with the ignitor removed from the circuit at minimum line conditions.

2.2.3 Current Waveshape Characteristic Requirements for Peak Lead Ballasts

Off time (OT), maximum…… 2.3 milliseconds
Peak Current, maximum…… 8.0 amperes
Overshoot (OS), maximum……+90 milliamperes

2.2.4 Minimum Sustaining Voltage (Vss) for Peak Lead Ballasts

Sustaining Voltage (Vss) Minimum: 270 V

The ballast shall meet this value at minimum rated input voltage for reliable lamp operation during warm-up and through life.

2.3 Ignitor Requirements

(a) Minimum pulse height, kV ……3.0
(b) Maximum pulse height, kV..... 4.0
(c) Minimum pulse width, µs @ kV..... 1.3 @ 2.7
(d) Minimum pulse repetition rate per half cycle 1
(e) Pulse position(s) for lag circuit ballasts ..... 64°-110°, 244°-290°
(f) Pulse position(s) for lead circuit ballasts ..... During the period when the OCV exceeds 90% peak.

2.4 Starting Current Requirements

	Lag ballasts	Peak-lead ballasts
Minimum starting current, A rms	2.8	2.8
Maximum starting current, A rms	4.2	4.2

2.5 Current Crest Factor

Maximum Current Crest Factor ……1.8

2.6 Maximum Voltage across Lamp Terminals

RMS	Peak	Peak Pulse
528	1100	4000

2.7 Lamp Operating Wattage

Design Center……. 350 watts

Range, 100-hour lamps…… 280 to 420 watts

3.0 INFORMATION FOR LUMINAIRE DESIGN ("CAUTION" of 7 (Part I) applies)

3.1 Voltage Rise, Luminaire Effect Limit

Lamp voltage change……. 5 volts, rms

Copyright 2005 © American National Standard Lighting Group in affiliation with NEMA

Copyright National Electrical Manufacturers Association
Provided by IHS under license with NEMA
No reproduction or networking permitted without license from IHS
Not for Resale

360 Watt M165 Metal Halide Lamp

1. LAMP SPECIFICATIONS

1.2 Lamp Designations and Descriptions

Designation	Bulb	Max. Outline Drawing	Base
M165/E	BT/ED28 (BT/ED90)	Fig. 8	E39 Mogul screw
M165/E	BT/ED37 (BT/ED118)	Fig. 9	E39 Mogul screw
M165/S	BT/ED37 (BT/ED118)	Fig. 9	E39 Mogul screw
M165/O	BT/ED37 (BT/ED118)	Fig. 9	EX39 Mogul Exclusionary

1.3 Lamp Physical Characteristics

	M165/E	*M165/E M165/S*	*M165/O*
Bulb	BT28 (BT75) ED28 (ED75)	BT37 (BT118) ED37 (ED118)	BT37 (BT118) ED37 (ED118)
Base	E39	E39	EX39
Nominal diameter [1]	90.0 (3.50)	118 (4.6)	118 (4.6)
Maximum overall length (MOL) [1]	211 (8.31)	292 (11.5)	292 (11.5)
Light center length (LCL) [1]	127 ± 5 (5 ± 0.2)	178 ± 6 (7 ± 0.24)	178 ± 6 (7 ± 0.24)
Effective arc length [1]	30 - 40 (1.2 – 1.6)	30 – 40 (1.2 – 1.6)	30 - 40 (1.2 – 1.6)
Maximum electrode tip deviation [2]	3	3	3
Maximum permissible bulb temperature [3]	400* (752)	400 (752)	400 (752)
Maximum permissible base temperature [3]	210**(410)	210*** (410)	210 (410)

[1] Dimensions are in mm, with equivalent inches within parentheses
[2] Maximum electrode tip deviation is from base axis (apex at base eyelet), measured in degrees
[3] Temperatures are in ºC, with equivalent ºF within parentheses
* Some manufacturers rate bulb temperature up to 430°C (806°F)
**Some manufacturers rate base temperature up to 230ºC (446ºF)
*** Some manufacturers rate base temperature up to 250°C (482°F)

Copyright 2005 © American National Standard Lighting Group in affiliation with NEMA

Copyright National Electrical Manufacturers Association
Provided by IHS under license with NEMA
No reproduction or networking permitted without license from IHS
Not for Resale

1.3 Operating Requirements at 100 Hours

	Vertical Base Up		
	Min	Nom	Max
Voltage at lamp terminals (V, rms)	110	120	130
Lamp current (A, rms)		3.25	
Lamp wattage (W)		360	

1.4 Lamp Reignition Voltage Spike (Vrs) During Warm-up

Maximum Reignition Voltage Spike ……. 150 volts, peak

Electrical Conditions:
Supply voltage ……. 350 volts
Ballast short circuit current …… 4.0 amperes
Impedance …… 87.5 ohms

1.5 Lamp Reignition Voltage (Vr) During Steady Operation

Maximum Reignition Voltage.....……..... 250 volts

1.6 Lamp Starting Voltage and Warm-up Requirements

1.6.1 Lamp Starting Voltage Requirements as a Function of Time and Temperature

Lamps shall start within the time specified at the ambient temperature indicated under the following test conditions:

Temperature	*Minimum OCV*		*Time*	*Probability of starting within the time specified*
	Vrms	*Vpeak*		
10°C ± 1°C (50°F ± 2°F)	350	495	120 s	98% of 0-hour lamps
-30°C ± 1°C (-22°F ± 2°F)	382	540	120 s	90% of 100-hour lamps

1.6.2 Lamp Warm-Up Requirements

Time to 95% of minimum lamp operating voltage……. 10 minutes

1.7 Reference ballast Characteristics

Rated input voltage……. 220 V
Reference current…… 3.25 A
Impedance…… 48.8 Ω

2 DATA FOR BALLAST DESIGN

These lamps are suitable for ballasts designed for M59 lamps with the approval of the ballast manufacturer.

2.1 Requirements for Lag Ballasts

Not Applicable

Copyright 2005 © American National Standard Lighting Group in affiliation with NEMA

Copyright National Electrical Manufacturers Association
Provided by IHS under license with NEMA
No reproduction or networking permitted without license from IHS
Not for Resale

2.2 Requirements for Peak Lead Ballasts

2.2.1 For Lamps not Requiring External Ignitor[3]

Temperature	Minimum OCV *Volts,rms*	*Crest factor*	Time	*Probability of starting within the time specified*
10°C ± 1°C (50°F ± 2°F)	280*	1.8	120 s	98% for 0-h lamps
-30°C ± 1°C (-22°F ± 2°F)	295**	1.8	120 s	90% for 100-h lamps

*The rms open-circuit voltage may be reduced by 10 volts for each 0.1 increase of the voltage crest factor, down to 240 volts rms, as the lowest value.
** The rms open-circuit voltage may be reduced by 10 volts for each 0.1 increase in the voltage crest factor, down to 275 volts rms, as the lowest value.

2.2.3 Current Waveshape Characteristic Requirements for Peak Lead Ballasts

Current slope (di/dt), minimum…… 1.0 amperes per millisecond
Off time (OT), maximum…….. 2.75 milliseconds
Peak Current, maximum…….. 9.0 amperes
Overshoot (OS), maximum…….. +100 milliamperes

2.2.4 Minimum Sustaining Voltage (Vss) for Peak Lead Ballasts

Minimum Sustaining Voltage (Vss)							
	Current Slope (di/dt), amperes per millisecond, at I=0						
Off-time (milliseconds)	1.0	1.5	2.0	2.5	3.0	3.5	4.0
2.75	294	285	276	266	257	247	238
2.50	288	279	269	260	251	241	232
2.00	276	266	257	248	238	229	220
1.50	263	254	245	235	226	217	207
1.00	251	242	232	223	214	204	195
0.50	239	229	220	210	201	192	183

The values given in this table are derived from the equation: $Vss = C_1 + C_2 (OT) – C_3 (di/dt)$ where:

Vss = minimum sustaining voltage in volts, (rms)
OT = Off-time in milliseconds
di/dt = Current slope at I=0 in amperes per millisecond
C1 = 245 C2 = 24.7 C3 = 18.7

2.3 Ignitor Requirements - NA

2.4 Starting Current Requirements

	Lag ballasts	Peak-lead ballasts
Minimum starting current, A rms	3.2	3.2
Maximum starting current, A rms	5.0	5.0

[3] These lamps are suitable for ballasts designed for M59 lamps with the approval of the ballast manufacturer.

Copyright 2005 © American National Standard Lighting Group in affiliation with NEMA

Copyright National Electrical Manufacturers Association
Provided by IHS under license with NEMA
No reproduction or networking permitted without license from IHS
Not for Resale

2.5 Current Crest Factor

Maximum Current Crest Factor…… 1.8

2.6 Maximum Voltage across Lamp Terminals

RMS	Peak	Peak Pulse
528	1100	NA

2.7 Lamp Operating Wattage

Design Center…….. 360 watts

Range, 100-hour lamps…… 288 to 432 watts

3 INFORMATION FOR LUMINAIRE DESIGN ("CAUTION" of 7 (Part I) applies)

3.1 Voltage Rise, Luminaire Effect Limit

Lamp voltage change…….. 5 volts, rms

Copyright 2005 © American National Standard Lighting Group in affiliation with NEMA

Copyright National Electrical Manufacturers Association
Provided by IHS under license with NEMA
No reproduction or networking permitted without license from IHS
Not for Resale

400 Watt M59 Metal Halide Lamp

1. LAMP SPECIFICATIONS

1.3 Lamp Designations and Descriptions

Designation	Bulb	Max. Outline Drawing	Base
M59/E	T15 (T48)	Fig. 5	E39 Mogul screw
M59/E	E18 (E57)	Fig. 6	E39 Mogul screw
M59/E	BT28 (BT90) or ED28 (ED75)	Fig. 8	E39 Mogul screw
M59/S or E	BT37 (BT118) or ED37 (ED118)	Fig. 9	E39 Mogul screw
M59/O	BT37 (BT118) or ED37 (ED118)	Fig. 9	EX39 Mogul Exclusionary
M59/E	BT37 (BT118) or ED37 (ED118)	Fig. 9	EP39 Mogul Position Oriented

1.4 Lamp Physical Characteristics

	M59/E	*M59/E*	*M59/E*	*M59/S M59/E M59/E*	*M59/O*
Bulb	T15 (T48)	E18 (E57)	BT28 (BT75) ED28 (ED75)	BT37 (BT118) ED37 (ED118)	BT37 (BT118) ED37 (ED118)
Base	E39	E39	E39	E39/EP39	EX39
Nominal diameter [1]	48 (1.875)	57 (2.25)	90.0 (3.50)	118 (4.6)	118 (4.6)
Maximum overall length (MOL) [1]	248 (9.76)	248 (9.76)	211 (8.31)	292 (11.5)	292 (11.5)
Light center length (LCL) [1]	146 ± 3 (5.75 ± 0.12)	146 ± 3 (5.75 ± 0.12)	127 ± 5 (5 ± 0.2)	178 ± 6 (7 ± 0.24)	178 ± 6 (7 ± 0.24)
Effective arc length [1]	32 - 46 (1.3 – 1.8)	32 - 46 (1.3 – 1.8)	32 - 46 (1.3 – 1.8)	32 - 46 (1.3 – 1.8)	32 - 46 (1.3 – 1.8)
Maximum electrode tip deviation [2]	3	3	3	3	3
Maximum permissible bulb temperature [3]	430 (806)	430 (806)	400 (752)	400 (752)	400 (752)
Maximum permissible base temperature [3]	210 (410)	210 (410)	210*(410)	210 (410)	210 (410)

[1] Dimensions are in mm, with equivalent inches within parentheses
[2] Maximum electrode tip deviation is from base axis (apex at base eyelet), measured in degrees
[3] Temperatures are in ºC, with equivalent ºF within parentheses
* Some manufacturers rate base temperature up to 250ºC

1.3 Operating Requirements at 100 Hours

	Vertical Base Up			Horizontal		
	Min	Nom	Max	Min	Nom	Max
Voltage at lamp terminals (V, rms)	120	135	150	118	133	148
Lamp current (A, rms)		3.25			3.25	
Lamp wattage (W)		400			400	

Copyright 2005 © American National Standard Lighting Group in affiliation with NEMA

Copyright National Electrical Manufacturers Association
Provided by IHS under license with NEMA
No reproduction or networking permitted without license from IHS
Not for Resale

1.4 Lamp Reignition Voltage Spike (Vrs) During Warm-up

Maximum Reignition Voltage Spike ..... 150 volts, peak

Electrical Conditions:
Supply voltage ..... 350 volts
Ballast short circuit current ..... 4.0 amperes
Impedance ..... 87.5 ohms

1.5 Lamp Reignition Voltage (Vr) During Steady Operation

Maximum Reignition Voltage.....…….... 250 volts

1.6 Lamp Starting Voltage and Warm-up Requirements

1.6.1 Lamp Starting Voltage Requirements as a Function of Time and Temperature

Lamps shall start within the time specified at the ambient temperature indicated under the following test conditions:

	Minimum OCV			
Temperature	*Vrms*	*Vpeak*	*Time*	*Probability of starting within the time specified*
10°C ± 1°C (50°F ± 2°F)	350	495	120 s	98% of 0-hour lamps
-30°C ± 1°C (-22°F ± 2°F)	382	540	120 s	90% of 100-hour lamps

1.6.2 Lamp Warm-Up Requirements

Time to 95% of minimum lamp operating voltage……. 10 minutes

1.7 Reference ballast Characteristics

Rated input voltage……. 220 V
Reference current…… 3.25 A
Impedance…… 45 Ω

2 DATA FOR BALLAST DESIGN

2.1 Requirements for Lag Ballasts

2.1.1 For Lamp Not Requiring an External Ignitor

	Minimum OCV			
Temperature	*Vrms*	*Vpeak*	*Time*	*Probability of starting within the time specified*
10°C ± 1°C (50°F ± 2°F)	350	495	120 s	98% of 0-hour lamps
-30°C ± 1°C (-22°F ± 2°F)	382	540	120 s	90% of 100-hour lamps

2.2 Requirements for Peak Lead Ballasts

2.2.1 For Lamps not Requiring External Ignitor

	Minimum OCV			*Probability of starting*
Temperature	*Volts,rms*	*Crest factor*	Time	*within the time specified*
10°C ± 1°C (50°F ± 2°F)	280*	1.8	120 s	98% for 0-h lamps
-30°C ± 1°C (-22°F ± 2°F)	295**	1.8	120 s	90% for 100-h lamps

*The rms open-circuit voltage may be reduced by 10 volts for each 0.1 increase of the voltage crest factor, down to 240 volts rms, as the lowest value.
** The rms open-circuit voltage may be reduced by 10 volts for each 0.1 increase in the voltage crest factor, down to 275 volts rms, as the lowest value.

Copyright 2005 © American National Standard Lighting Group in affiliation with NEMA

Copyright National Electrical Manufacturers Association
Provided by IHS under license with NEMA
No reproduction or networking permitted without license from IHS
Not for Resale

2.2.3 Current Waveshape Characteristic Requirements for Peak Lead Ballasts

Current slope (di/dt), minimum…… 1.0 amperes per millisecond
Off time (OT), maximum…….. 2.75 milliseconds
Peak Current, maximum…….. 9.0 amperes
Overshoot (OS), maximum…….. 100 milliamperes

2.2.4 Minimum Sustaining Voltage (Vss) for Peak Lead Ballasts

Minimum Sustaining Voltage (Vss)							
	Current Slope (di/dt), amperes per millisecond, at I=0						
Off-time (milliseconds)	1.0	1.5	2.0	2.5	3.0	3.5	4.0
2.75	294	285	276	266	257	247	238
2.50	288	279	269	260	251	241	232
2.00	276	266	257	248	238	229	220
1.50	263	254	245	235	226	217	207
1.00	251	242	232	223	214	204	195
0.50	239	229	220	210	201	192	183

The values given in this table are derived from the equation: $Vss = C_1 + C_2 (OT) – C_3 (di/dt)$ where:

Vss = minimum sustaining voltage in volts, (rms)
OT = Off-time in milliseconds
di/dt = Current slope at I=0 in amperes per millisecond
C1 = 245 C2 = 24.7 C3 = 18.7

2.3 Ignitor Requirements - NA

2.4 Starting Current Requirements

	Lag ballasts	Peak-lead ballasts
Minimum starting current, A rms	3.2	3.2
Maximum starting current, A rms	5.0	5.0

2.5 Current Crest Factor

Maximum Current Crest Factor…… 1.8

2.6 Maximum Voltage across Lamp Terminals

RMS	Peak	Peak Pulse
528	1100	NA

2.7 Lamp Operating Wattage

Design Center…… 400 watts
Range, 100-hour lamps…… 320 to 480 watts

3 INFORMATION FOR LUMINAIRE DESIGN ("CAUTION" of 7 (Part I) applies)

3.1 Voltage Rise, Luminaire Effect Limit

Lamp voltage change…… 5 volts, rms

Copyright 2005 © American National Standard Lighting Group in affiliation with NEMA

Copyright National Electrical Manufacturers Association
Provided by IHS under license with NEMA
No reproduction or networking permitted without license from IHS
Not for Resale

400 Watt M155 Pulse-Start Metal-Halide Lamp

1 LAMP SPECIFICATIONS

1.1 Lamp Designations and Descriptions

Designation	Bulb	Maximum Outline Drawing	Base
M155/E	BT28 (BT90)	Fig. 8	E39 Mogul Screw
M155/O	BT28 (BT90)	Fig. 8	EX39 Mogul Exclusionary
M155/E	BT37 (BT118)	Fig. 9	E39 Mogul Screw
M155/S	BT37 (BT118)	Fig. 9	E39 Mogul Screw
M155/O	BT37 (BT118)	Fig. 9	EX39 Mogul Exclusionary

1.2 Lamp Physical Characteristics

	M155/O *M155/E*	*M155/O* *M155/S* *M155/E*
Bulb	BT28 (BT75) ED28 (ED75)	BT37 (BT118) ED37 (ED118)
Base	E39 for /E EX39 for /O	E39 for /E EX39 for /O
Nominal diameter [1]	90.0 (3.50)	118 (4.6)
Maximum overall length (MOL) [1]	211 (8.31)	292 (11.5)
Light center length (LCL) [1]	127 ± 5 (5 ± 0.2)	178 ± 6 (7 ± 0.24)
Effective arc length [1]	32 - 46 (1.3 – 1.8)	32 - 46 (1.3 – 1.8)
Maximum electrode tip deviation [2]	3	3
Maximum permissible bulb temperature [3]	400 (752)	400 (752)
Maximum permissible base temperature [3][4]	210 (410)	210 (410)

[1] Dimensions are in mm, with equivalent inches within parentheses
[2] Maximum electrode tip deviation is from base axis (apex at base eyelet), measured in degrees
[3] Temperatures are in ºC, with equivalent ºF within parentheses
[4] Some manufacturers rate base temperature at values up to 250ºC

1.3 Operating Requirements at 100 hours

	Min	Nom	Max
Voltage at lamp terminals (V, rms)	120	135	150
Lamp current (A, rms)		3.25	
Lamp wattage (W)		400	

Copyright 2005 © American National Standard Lighting Group in affiliation with NEMA

Copyright National Electrical Manufacturers Association
Provided by IHS under license with NEMA
No reproduction or networking permitted without license from IHS
Not for Resale

1.4 Lamp Reignition Voltage Spike (Vrs) During Warm-up

Maximum Reignition Voltage Spike ..... 150 volts, peak

Electrical Conditions:
Supply voltage ..... 350 volts
Ballast short circuit current ..... 4.00 amperes
Impedance ..... 87.5 ohms

1.5 Lamp Reignition Voltage (Vr) During Steady Operation

Maximum Reignition Voltage ..... 270 volts

1.6 Lamp Starting Voltage and Warm up Requirements

1.6.1 Lamp Starting Voltage Requirements as a function of time and temperature

Lamps shall start within the time specified at the ambient temperature indicated when the minimum open-circuit test voltages and the minimum starting pulse, Sec. 2.3, are applied.

Temperature	*Minimum OCV*		*Time*	*Probability of starting within the time specified*
	Vrms	*Vpeak*		
10°C ± 1°C (50°F ± 2°F)	254	359	120 s	98% of 0-hour lamps
-30°C ± 1°C (-22°F ± 2°F)	254	359	120 s	90% of 100-hour lamps

1.6.2 Lamp Warm-Up Requirements

Time to 95% of minimum lamp operating voltage..... 10 minutes

1.7 Reference Ballast Characteristics

Rated input voltage..... 220 V
Reference current..... 3.25 A
Impedance..... 45 Ω

2 DATA FOR BALLAST DESIGN

2.1 Requirements for Lag Ballast

2.1.2 For Lamps Requiring an External Ignitor

Temperature	*Minimum OCV*[1]		*Time*	*Probability of starting within the time specified*
	Vrms	*Vpeak*		
10°C ± 1°C (50°F ± 2°F)	254	345[#]	120 s	98% of 0-hour lamps
-30°C ± 1°C (-22°F ± 2°F)	254	345	120 s	90% of 100-hour lamps

[1] OCV (open circuit voltage) is measured with the ignitor removed from the circuit at minimum line conditions.

2. 2 Requirements for Peak Lead Ballasts

2.2.2 For Lamps Requiring an External Ignitor

[#] 345V is lower than the product of 1.414 and Vrms to accommodate magnetic regulated ballasts.

Copyright 2005 © American National Standard Lighting Group in affiliation with NEMA

Copyright National Electrical Manufacturers Association
Provided by IHS under license with NEMA
No reproduction or networking permitted without license from IHS
Not for Resale

Temperature	Minimum OCV[1] Vrms	Peak Volts	Time	Probability of starting within the time specified
10°C ± 1°C (50°F ± 2°F)	254	483	120 s	98% for 0-h lamps
-30°C ± 1°C (-22°F ± 2°F)	254	483	120 s	90% for 100-h lamps

[1] OCV (open circuit voltage) is measured with the ignitor removed from the circuit at minimum line conditions.

2.2.3 Current Waveshape Characteristic Requirements for Peak Lead Ballasts

Off time (OT), maximum…… 2.3 milliseconds
Peak Current, maximum…… 9.0 amperes
Overshoot (OS), maximum…… 100 milliamperes

2.2.4 Minimum Sustaining Voltage (Vss) for Peak Lead Ballasts

Sustaining Voltage (Vss) Minimum: 270 V

The ballast shall meet this value at minimum rated input voltage for reliable lamp operation during warm-up and through life.

2.3 Ignitor Requirements

(a) Minimum pulse height, kV ……3.0
(b) Maximum pulse height, kV..... 4.0
(c) Minimum pulse width, µs @ kV..... 1.3 @ 2.7
(d) Minimum pulse repetition rate per half cycle 1
(e) Pulse position(s) for lag circuit ballasts ..... 64°-110°, 244°-290°
(f) Pulse position(s) for lead circuit ballasts ..... During the period when the OCV exceeds 90% peak.

2.4 Starting Current Requirements

	Lag ballasts	Peak-lead ballasts
Minimum starting current, A rms	3.2	3.2
Maximum starting current, A rms	5.0	5.0

2.5 Current Crest Factor

Maximum Current Crest Factor ……1.8

2.6 Maximum Voltage across Lamp Terminals

RMS	Peak	Peak Pulse
528	1100	4000

2.7 Lamp Operating Wattage

Design Center……. 400 watts

Range, 100-hour lamps…… 320 to 480 watts

3.0 INFORMATION FOR LUMINAIRE DESIGN ("CAUTION" of 7 (Part I) applies)

3.1 Voltage Rise, Luminaire Effect Limit

Lamp voltage change……. 5 volts, rms

Copyright 2005 © American National Standard Lighting Group in affiliation with NEMA

Copyright National Electrical Manufacturers Association
Provided by IHS under license with NEMA
No reproduction or networking permitted without license from IHS
Not for Resale

750 Watt M149 Pulse-Start Metal Halide Lamp

1. LAMP SPECIFICATIONS

1.1 Lamp Designations and Descriptions

Designation	Bulb	Maximum Outline Drawing	Base
M149/E	BT37 (BT118), ED37 (ED118)	Fig. 9	E39 mogul screw

1.2 Lamp Physical Characteristics

	M141/E
Bulb	BT37 (BT118) ED37 (ED118)
Base	E39
Nominal diameter [1]	118 (4.6)
Maximum overall length (MOL) [1]	292 (11.5)
Light center length (LCL) [1]	178 ± 6 (7.0 ± 0.24)
Effective arc length [1]	55 - 67 (2.17 - 2.64)
Maximum electrode tip deviation [2]	3
Maximum permissible bulb temperature [3]	430 (806)
Maximum permissible base temperature [3][4]	210 (410)

[1] Dimensions are in mm, with equivalent inches within parentheses
[2] Maximum electrode tip deviation is from base axis (apex at base eyelet), measured in degrees
[3] Temperatures are in ºC, with equivalent ºF within parentheses
[4] Some manufacturers rate base temperature up to 250°C

1.3 Operating requirements at 100 hours

	Min	*Nom*	*Max*
Voltage at lamp terminals (V, rms)	180	200	220
Lamp current (A, rms)	-	4.0	-
Lamp wattage (W)	-	750	-

Copyright 2005 © American National Standard Lighting Group in affiliation with NEMA

Copyright National Electrical Manufacturers Association
Provided by IHS under license with NEMA
No reproduction or networking permitted without license from IHS
Not for Resale

1.4 Lamp Reignition Voltage Spike (Vrs) During Warm-up

Maximum Reignition Voltage Spike ……. 150 volts, peak

Electrical Conditions:
Supply voltage ……. 440 volts
Ballast short circuit current …… 5.1 amperes
Impedance …… 86.3 ohms

1.5 Lamp Reignition Voltage (Vr) During Steady Operation

Maximum Reignition Voltage.....……. 375 volts

1.6 Lamp Starting Voltage and Warm-up Requirements

1.6.1 Lamp Starting Voltage Requirements as a function of time and temperature

Lamps shall start within the time specified at the ambient temperature indicated when the minimum open-circuit test voltages and the minimum starting pulse, Sec. 2.3, are applied.

Temperature	*Minimum OCV*		*Time*	*Probability of starting within the time specified*
	Vrms	*Vpeak*		
10°C ± 1°C (50°F ± 2°F)	330	467	120 s	98% of 0-hour lamps
-30°C ± 1°C (-22°F ± 2°F)	330	467	120 s	90% of 100-hour lamps

1.6.2 Lamp Warm-Up Requirements

Time to 95% of minimum lamp operating voltage……10 minutes

1.7 Reference Ballast Characteristics

Rated input voltage…… 460 V
Reference current…….. 4.0 A
Impedance…… 92 Ω

2 DATA FOR BALLAST DESIGN

2.1 Requirements for Lag Ballasts

2.1.2 For Lamps Requiring an External Ignitor

Temperature	*Minimum OCV*[1]		*Time*	*Probability of starting within the time specified*
	Vrms	*Vpeak*		
10°C ± 1°C (50°F ± 2°F)	330	467	120 s	98% of 0-hour lamps
-30°C ± 1°C (-22°F ± 2°F)	330	467	120 s	90% of 100-hour lamps

[1] OCV (open circuit voltage) is measured with the ignitor removed from the circuit at minimum line conditions

Copyright 2005 © American National Standard Lighting Group in affiliation with NEMA

Copyright National Electrical Manufacturers Association
Provided by IHS under license with NEMA
No reproduction or networking permitted without license from IHS
Not for Resale

2.2 Requirements For Peak Lead Ballasts

2.2.2 For Lamps Requiring an External Ignitor

Temperature	*Minimum OCV*[1] *Vrms*	*Crest Factor*	*Time*	*Probability of starting within the time specified*
10°C ± 1°C (50°F ± 2°F)	330[2]	1.8	120 s	98% of 0-hour lamps
-30°C ± 1°C (-22°F ± 2°F)	330[2]	1.8	120 s	90% of 100-hour lamps

[1] OCV (open circuit voltage) is measured with the ignitor removed from the circuit at minimum line conditions.
[2] The rms open-circuit voltage may be reduced by 10 volts for each 0.1 increase of the voltage crest factor, down to 300 volts rms, as the lowest value.

2.2.3 Current Waveshape Characteristic Requirements for Peak Lead Ballasts

Off time (OT), maximum…….. 2.4 milliseconds
Peak Current, maximum…….. 10.6 amperes
Overshoot (OS), maximum…….. 100 milliamperes

2.2.4 Minimum Sustaining Voltage (Vss) for Peak Lead Ballasts

Sustaining Voltage (Vss) Minimum: …… 310 V

The ballast shall meet this value at minimum rated input voltage for reliable lamp operation during warm-up and through life.

2.3 Ignitor Requirements

(a) Minimum pulse height, kV …… 3.0
(b) Maximum pulse height, kV …… 4.0
(c) Minimum pulse width, __ µs @ __ kV …… 1.5 @ 2.7
(d) Minimum pulse repetition rate per half cycle …….. 2
(e) Pulse position(s) for lag ballasts …….. 64º-110º, 244º-290º
(f) Pulse position(s) for lead circuit ballasts ……. During period when the OCV exceeds 90% peak.

2.4 Starting Current Requirements

	Lag ballasts	Peak-lead ballasts
Minimum starting current, A rms	4.0	4.0
Maximum starting current, A rms	7.0	6.1

2.5 Current Crest Factor

Maximum Current Crest Factor……..… 1.8

2.6 Maximum Voltage across Lamp Terminals

RMS	Peak	Peak Pulse
660	1400	4000

2.7 Lamp Operating Wattage

Design Center…….. 750 watts
Range, 100-hour lamps…… 600 to 900 watts

3.0 INFORMATION FOR LUMINAIRE DESIGN – FOR "CAUTION" SEE SECTION I, Par 7.

3.1 Voltage Rise, Luminaire Effect Limit

Lamp voltage change……. 10 volts, rms

Copyright 2005 © American National Standard Lighting Group in affiliation with NEMA

Copyright National Electrical Manufacturers Association
Provided by IHS under license with NEMA
No reproduction or networking permitted without license from IHS
Not for Resale

1000 Watt M47 Metal Halide Lamp

1 LAMP SPECIFICATIONS

1.1 Lamp Designations and Descriptions

Designation	Bulb	Max. Outline Drawing	Base
M47/O	BT56 (BT180)	Fig. 10	EX39 Mogul screw
M47/S or E	BT56 (BT180)	Fig. 10	E39 Mogul screw
M47/E	BT37 (BT118) or ED37 (ED118)	Fig. 9	E39 Mogul screw

1.2 Lamp Physical Characteristics

	M47/E	*M47/E M47/S*	*M47/O*
Bulb	BT37 (BT118) ED37 (ED118)	BT56 (BT180)	BT56 (BT180)
Base Size	E39	E39	EX39
Nominal diameter [1]	118 (4.6)	180 (7.0)	180 (7.0)
Maximum overall length (MOL) [1]	292 (11.5)	391 (15.38)	391 (15.38)
Light center length (LCL) [1]	178 ± 6 (7.0 ± 0.24)	241 ± 6 (9.5 ± 0.24)	241 ± 6 (9.5 ± 0.24)
Effective arc length [1]	82 - 98 (3.2 – 3.8)	82 - 98 (3.2 – 3.8)	82 - 98 (3.2 – 3.8)
Maximum electrode tip deviation [2]	3	3	3
Maximum permissible bulb temperature [3]	430 (806)	430 (806)	430 (806)
Maximum permissible base temperature [3]	210* (410)	210 (410)	210 (410)

[1] Dimensions are in mm, with equivalent inches within parentheses
[2] Maximum electrode tip deviation is from base axis (apex at base eyelet), measured in degrees
[3] Temperatures are in ºC, with equivalent ºF within parentheses
* Some manufacturers rate base temperature up to 250ºC

1.3 Operating requirements at 100 hours

	Vertical Base Up			Horizontal		
	Min	Nom	Max	Min	Nom	Max
Voltage at lamp terminals (V, rms)	238	263	288	230	255	280
Lamp current (A, rms)		4.1			4.2	
Lamp wattage (W)		1000			1000	

Copyright 2005 © American National Standard Lighting Group in affiliation with NEMA

Copyright National Electrical Manufacturers Association
Provided by IHS under license with NEMA
No reproduction or networking permitted without license from IHS
Not for Resale

1.4 Lamp Reignition Voltage Spike (Vrs) During Warm-up

Maximum Reignition Voltage Spike ..... 250 volts, peak

Electrical Conditions:
Supply voltage ..... 440 volts
Ballast short circuit current ..... 5.7 amperes
Impedance ..... 77.4 ohms

1.5 Lamp Reignition Voltage (Vr) During Steady Operation

Maximum Reignition Voltage.....…….. 470 volts

1.6 Lamp Starting Voltage and Warm-up Requirements

1.6.1 Without External Starting Circuit

Lamps shall start within the time specified at the ambient temperature indicated under the following test conditions:

Temperature	*Minimum OCV*		*Time*	*Probability of starting within the time specified*
	Vrms	*Vpeak*		
10°C ± 1°C (50°F ± 2°F)	440	622	120 s	98% of 0-hour lamps
-30°C ± 1°C (-22°F ± 2°F)	530	750	120 s	90% of 100-hour lamps

1.6.2 Lamp Warm-Up Requirements

Time to 95% of minimum lamp operating voltage……. 10 minutes

1.7 Reference Ballast Characteristics

Rated input voltage……. 460 V
Reference current…… 4.1 A
Impedance…… 79 Ω

2 DATA FOR BALLAST DESIGN

2.1 Requirements for Lag Ballasts

2.1.1 For Lamps Not Requiring an External Ignitor

Temperature	*Minimum OCV*		*Time*	*Probability of starting within the time specified*
	Vrms	*Vpeak*		
10°C ± 1°C (50°F ± 2°F)	440	622	120 s	98% of 0-hour lamps
-30°C ± 1°C (-22°F ± 2°F)	530	750	120 s	90% of 100-hour lamps

2.2 Requirements For Peak Lead Ballasts

2.2.1 For Lamps Not Requiring an External Ignitor

Temperature	*Minimum OCV*		*Time*	*Probability of starting within the time specified*
	Vrms	*Crest Factor*		
10°C ± 1°C (50°F ± 2°F)	340*	2.0	120 s	98% of 0-hour lamps
-30°C ± 1°C (-22°F ± 2°F)	380**	2.0	120 s	90% of 100-hour lamps

*The rms open-circuit voltage may be reduced by 10 volts for each 0.1 increase of the voltage crest factor, down to 320 volts rms, as the lowest value.

Copyright 2005 © American National Standard Lighting Group in affiliation with NEMA

Copyright National Electrical Manufacturers Association
Provided by IHS under license with NEMA
No reproduction or networking permitted without license from IHS
Not for Resale

**The rms open-circuit voltage may be reduced by 10 volts for each 0.1 increase in the voltage crest factor, down to 360 volts rms, as the lowest value.

2.2.3 Current Waveshape Characteristic Requirements for Peak Lead Ballasts

Current slope (di/dt), minimum…… 1.5 amperes per millisecond
Off time (OT), maximum…….. 2.5 milliseconds
Peak Current, maximum…….. 11.5 amperes
Overshoot (OS), maximum…….. 100 milliamperes

2.2.4 Minimum Sustaining Voltage (Vss) for Peak Lead Ballasts

Minimum Sustaining Voltage (Vss)						
	Current Slope (di/dt), amperes per millisecond, at I=0					
Off-time (milliseconds)	1.5	2.0	3.0	4.0	5.0	6.0
2.5	344	338	333	328	323	318
2.0	328	326	321	316	311	306
1.5	315	312	307	302	297	292
1.0	299	295	290	288	283	278

The values given in this table are derived from the equation: $Vss = C_1 + C_2 (OT) – C_3 (di/dt)$ where:

Vss = minimum sustaining voltage in volts, (rms)
OT = Off-time in milliseconds
di/dt = Current slope at I=0 in amperes per millisecond
C1 = 278 C2 = 27.6 C3 = 4.15

2.3 Ignitor Requirements - NA

2.4 Starting Current Requirements

	Lag ballasts	Peak-lead ballasts
Minimum starting current, A rms	4.2	4.2
Maximum starting current, A rms	7.5	6.5

2.5 Current Crest Factor

Maximum Current Crest Factor……..… 1.8

2.6 Maximum Voltage across Lamp Terminals

RMS	Peak	Peak Pulse
530	2150	NA

2.7 Lamp Operating Wattage

Design Center…….. 1000 watts

Range, 100-hour lamps……. 800 to 1200 watts

3.0 INFORMATION FOR LUMINAIRE DESIGN ("CAUTION" of 7 (Part I) applies)

3.1 Voltage Rise, Luminaire Effect Limit

Lamp voltage change……. 10 volts, rms

Copyright 2005 © American National Standard Lighting Group in affiliation with NEMA

Copyright National Electrical Manufacturers Association
Provided by IHS under license with NEMA
No reproduction or networking permitted without license from IHS
Not for Resale

1000 Watt M141 Pulse-Start Metal Halide Lamp

1. LAMP SPECIFICATIONS

1.4 Lamp Designations and Descriptions

Designation	*Bulb*	*Maximum Outline Drawing*	*Base*
M141/E	BT37 (BT118), ED37 (ED118)	Fig. 9	E39 mogul screw

1.5 Lamp Physical Characteristics

	M141/E
Bulb	BT37 (BT118) ED37 (ED118)
Base	E39 mogul screw
Nominal diameter [1]	118 (4.6)
Maximum overall length (MOL) [1]	292 (11.5)
Light center length (LCL) [1]	178 +/- 6 (7.0 +/- 0.24)
Effective arc length [1]	79 - 95 (3.11 – 3.75)
Maximum electrode tip deviation [2]	3
Maximum permissible bulb temperature [3]	430 (806) [4]
Maximum permissible base temperature [3]	210 (410) [5]

[1] Dimensions are in mm, with equivalent inches within parentheses
[2] Maximum electrode tip deviation is from base axis (apex at base eyelet), measured in degrees
[3] Temperatures are in ºC, with equivalent ºF within parentheses
[4] Some manufacturers rate bulb temperature up to 450°C
[5] Some manufacturers rate base temperature up to 250°C

1.6 Operating requirements at 100 hours

	Min	*Nom*	*Max*
Voltage at lamp terminals (V, rms)	238	263	288
Lamp current (A, rms)	-	4.1	-
Lamp wattage (W)	-	1000	-

1.4 Lamp Reignition Voltage Spike (Vrs) During Warm-up

Maximum Reignition Voltage Spike …… 250 volts, peak

Electrical Conditions:
Supply voltage …… 440 volts
Ballast short circuit current …… 5.7 amperes
Impedance …… 77.4 ohms

Copyright 2005 © American National Standard Lighting Group in affiliation with NEMA

Copyright National Electrical Manufacturers Association
Provided by IHS under license with NEMA
No reproduction or networking permitted without license from IHS
Not for Resale

1.5 Lamp Reignition Voltage (Vr) During Steady Operation

Maximum Reignition Voltage.....……. 470 volts

1.6 Lamp Starting Voltage and Warm-up Requirements

1.6.1 Lamp Starting Voltage Requirements as a function of time and temperature

Lamps shall start within the time specified at the ambient temperature indicated when the minimum open-circuit test voltages and the minimum starting pulse, Sec. 2.3, are applied.

Temperature	*Minimum OCV*		*Time*	*Probability of starting within the time specified*
	Vrms	*Vpeak*		
10°C ± 1°C (50°F ± 2°F)	440	622	120 s	98% of 0-hour lamps
-30°C ± 1°C (-22°F ± 2°F)	530	750	120 s	90% of 100-hour lamps

1.6.2 Lamp Warm-Up Requirements

Time to 95% of minimum lamp operating voltage……. 10 minutes

1.7 Reference Ballast Characteristics

Rated input voltage……. 460 V
Reference current…… 4.1 A
Impedance…… 79 Ω

2 DATA FOR BALLAST DESIGN

2.1 Requirements for Lag Ballasts – NA

2.2 Requirements for Peak Lead Ballasts

2.2.2 For Lamps Requiring an External Ignitor

Temperature	*Minimum OCV*[1]		*Time*	*Probability of starting within the time specified*
	Vrms	*Crest Factor*		
10°C ± 1°C (50°F ± 2°F)	340*	2.0	120 s	98% of 0-hour lamps
-30°C ± 1°C (-22°F ± 2°F)	380**	2.0	120 s	90% of 100-hour lamps

*The rms open-circuit voltage may be reduced by 10 volts for each 0.1 increase of the voltage crest factor, down to 320 volts rms, as the lowest value.
**The rms open-circuit voltage may be reduced by 10 volts for each 0.1 increase in the voltage crest factor, down to 360 volts rms, as the lowest value.

2.2.3 Current Waveshape Characteristic Requirements for Peak Lead Ballasts

Off time (OT), maximum…….. 2.5 milliseconds
Peak Current, maximum…….. 11.5 amperes
Overshoot (OS), maximum…….. +100 milliamperes

Copyright 2005 © American National Standard Lighting Group in affiliation with NEMA

Copyright National Electrical Manufacturers Association
Provided by IHS under license with NEMA
No reproduction or networking permitted without license from IHS
Not for Resale

2.2.4 Minimum Sustaining Voltage (Vss) for Peak Lead Ballasts

Minimum Sustaining Voltage (Vss)						
	Current Slope (di/dt), amperes per millisecond, at I=0					
Off-time (milliseconds)	*1.5*	*2.0*	*3.0*	*4.0*	*5.0*	*6.0*
2.5	344	338	333	328	323	318
2.0	328	326	321	316	311	306
1.5	315	312	307	302	297	292
1.0	299	295	290	288	283	278

The values given in this table are derived from the equation: $Vss = C_1 + C_2 (OT) – C_3 (di/dt)$ where:

Vss = minimum sustaining voltage in volts, (rms)
OT = Off-time in milliseconds
Di/dt = Current slope at I=0 in amperes per millisecond
C1 = 278 C2 = 27.6 C3 = 4.15

2.3 Ignitor Requirements

(a) Minimum pulse height, kV 3.0
(b) Maximum pulse height, kV 4.0
(c) Minimum pulse width, __ µs @ __ kV ..... 2.5 @ 2.7
(d) Minimum pulse repetition rate per half cycle 1
(e) Pulse position(s) for lag ballasts ..... 64°-110°, 244°-290°
(f) Pulse position(s) for lead circuit ballasts ..... During the period when the OCV exceeds 90% peak

2.4 Starting Current Requirements

	Lag ballasts	*Peak-lead ballasts*
Minimum starting current, A rms	4.2	4.2
Maximum starting current, A rms	7.5	6.5

2.5 Current Crest Factor

Maximum Current Crest Factor……..… 1.8

2.7 Maximum Voltage across Lamp Terminals

RMS	*Peak*	*Peak Pulse*
530	2150	4000

2.7 Lamp Operating Wattage

Design Center……... 1000 watts
Range, 100-hour lamps…… 800 to 1200 watts

3.0 INFORMATION FOR LUMINAIRE DESIGN – FOR “CAUTION” SEE SECTION I, Par 7.

3.1 Voltage Rise, Luminaire Effect Limit

Lamp voltage change……. 10 volts, rms

Copyright 2005 © American National Standard Lighting Group in affiliation with NEMA

Copyright National Electrical Manufacturers Association
Provided by IHS under license with NEMA
No reproduction or networking permitted without license from IHS
Not for Resale

1500 Watt M48 Metal Halide Lamp

1 LAMP SPECIFICATIONS

1.1 Lamp designations and descriptions

Designation	Bulb	Maximum Outline Drawing	Base
M48/E	BT56 (BT180)	Fig. 10	E39 Mogul screw

1.2 Lamp Physical Characteristics

	M48/E
Bulb	BT56 (BT180)
Base Size	E39
Nominal diameter [1]	180 (7.0)
Maximum overall length (MOL) [1]	391 (15.38)
Light center length (LCL) [1]	241 ± 6 (9.5 ± 0.24)
Effective arc length [1]	82 - 98 (3.2 – 3.8)
Maximum electrode tip deviation [2]	3
Maximum permissible bulb temperature [3]	430 (806)
Maximum permissible base temperature [3]	210 (410)

[1] Dimensions are in mm, with equivalent inches within parentheses
[2] Maximum electrode tip deviation is from base axis (apex at base eyelet), measured in degrees
[3] Temperatures are in ºC, with equivalent ºF within parentheses

1.3 Operating requirements at 100 hours

	Min	Nom	Max
Voltage at lamp terminals (V, rms)	253	268	283
Lamp current (A, rms)		6.2	
Lamp wattage (W)		1500	

Copyright 2005 © American National Standard Lighting Group in affiliation with NEMA

Copyright National Electrical Manufacturers Association
Provided by IHS under license with NEMA
No reproduction or networking permitted without license from IHS
Not for Resale

1.4 Lamp Reignition Voltage Spike (Vrs) During Warm-up

Maximum Reignition Voltage Spike ……..…….. 150 volts, peak

Electrical Conditions:
Supply voltage ……. 440 volts
Ballast short circuit current …….…… 7.6 amperes
Impedance …… 57.9 ohms

1.5 Lamp Reignition Voltage (Vr) During Steady Operation

Maximum Reignition Voltage.....…….…… 470 volts

1.6 Lamp Starting Voltage and Warm-up Requirements

1.6.1 Without External Starting Circuit

Lamps shall start within the time specified at the ambient temperature indicated under the following test conditions:

Temperature	*Minimum OCV*		*Time*	*Probability of starting within the time specified*
	Vrms	*Vpeak*		
10°C ± 1°C (50°F ± 2°F)	440	622	120 s	98% of 0-hour lamps
-30°C ± 1°C (-22°F ± 2°F)	530	750	120 s	90% of 100-hour lamps

1.6.2 Lamp Warm-Up Requirements

Time to 95% of minimum lamp operating voltage…..…… 10 minutes

1.7 Reference ballast Characteristics

Rated input voltage…….……. 460 V
Reference current……. 6.2 A
Impedance……. 50.2 Ω

2 DATA FOR BALLAST DESIGN

2.1 Requirements for Lag Ballasts

2.1.1 For Lamps Not Requiring an External Ignitor

Temperature	*Minimum OCV*		*Time*	*Probability of starting within the time specified*
	Vrms	*Vpeak*		
10°C ± 1°C (50°F ± 2°F)	440	622	120 s	98% of 0-hour lamps
-30°C ± 1°C (-22°F ± 2°F)	530	750	120 s	90% of 100-hour lamps

2.2 Requirements for Peak Lead Ballasts

2.2.1 For Lamps Not Requiring an External Ignitor

Temperature	*Minimum OCV*		*Time*	*Probability of starting within the time specified*
	Vrms	*Crest Factor*		
10°C ± 1°C (50°F ± 2°F)	370*	2.0	120 s	98% of 0-hour lamps
-30°C ± 1°C (-22°F ± 2°F)	410**	2.0	120 s	90% of 100-hour lamps

* The rms open-circuit voltage may be reduced by 10 volts for each 0.1 increase of the voltage crest factor, down to 350 volts rms, as the lowest value.

Copyright 2005 © American National Standard Lighting Group in affiliation with NEMA

Copyright National Electrical Manufacturers Association
Provided by IHS under license with NEMA
No reproduction or networking permitted without license from IHS
Not for Resale

** The rms open-circuit voltage may be reduced by 10 volts for each 0.1 increase in the voltage crest factor, down to 390 volts rms, as the lowest value.

2.2.3 Current Waveshape Characteristic Requirements for Peak Lead Ballasts

Current slope (di/dt), minimum…… 2.5 amperes per millisecond
Off time (OT), maximum…….. 2.75 milliseconds
Peak Current, maximum…….. 16 amperes
Overshoot (OS), maximum…….. 50 milliamperes

2.2.4 Minimum Sustaining Voltage (Vss) for Peak Lead Ballasts

Minimum Sustaining Voltage (Vss)							
	Current Slope (di/dt), amperes per millisecond, at I=0						
Off-time (milliseconds)	2.5	3.0	3.5	4.0	4.5	5.0	5.5
2.75	447	397	357	324	297	275	258
2.50	436	386	346	313	286	264	247
2.25	425	375	335	302	275	253	236
2.00	414	364	324	291	264	242	225
1.75	403	353	313	280	253	231	214
1.50	392	342	302	269	242	220	203

The values given in this table are derived from the equation: $Vss = C_1 + C_2 (OT) + C_3 e^{-0.41 di/dt}$ where:

Vss = minimum sustaining voltage in volts, (rms)
OT = Off-time in milliseconds
di/dt = Current slope at I=0 in amperes per millisecond
C1 = 59 C2 = 44 C3 = 745

2.3 Ignitor Requirements - NA

2.4 Starting Current Requirements

	Lag ballasts	Peak-lead ballasts
Minimum starting current, A rms	6.2	6.2
Maximum starting current, A rms	10.4	9.0

2.5 Current Crest Factor

Maximum Current Crest Factor…… 1.8

2.6 Maximum Voltage across Lamp Terminals

RMS	Peak	Peak Pulse
530	2150	NA

2.7 Lamp Operating Wattage

Design Center……. 1500 watts

Range, 100-hour lamps…… 1200 to 1800 watts

3.0 INFORMATION FOR LUMINAIRE DESIGN ("CAUTION" of 7 (Part I) applies)

3.1 Voltage Rise, Luminaire Effect Limit

Lamp voltage change……. 10 volts, rms

Copyright 2005 © American National Standard Lighting Group in affiliation with NEMA

Copyright National Electrical Manufacturers Association
Provided by IHS under license with NEMA
No reproduction or networking permitted without license from IHS
Not for Resale

1650 Watt M112 Metal Halide Lamp

1 LAMP SPECIFICATIONS

1.1 Lamp designations and descriptions

Designation	Bulb	Maximum Outline Drawing	Base
M112/E	BT56 (BT180)	Fig. 10	EP39 Mogul Position Oriented

1.2 Lamp Physical Characteristics

	M112/E
Bulb	BT56 (BT180)
Base Size	EP39
Nominal diameter [1]	180 (7.0)
Maximum overall length (MOL) [1]	391 (15.38)
Light center length (LCL) [1]	241 ± 6 (9.5 ± 0.24)
Effective arc length [1]	73 - 97 (2.8 – 3.8)
Maximum electrode tip deviation [2]	3
Maximum permissible bulb temperature [3]	430 (806)
Maximum permissible base temperature [3]	210 (410)

[1] Dimensions are in mm, with equivalent inches within parentheses
[2] Maximum electrode tip deviation is from base axis (apex at base eyelet), measured in degrees
[3] Temperatures are in ºC, with equivalent ºF within parentheses

1.3 Operating requirements at 100 hours

As an exception to Part I, Section 5.3, this lamp is measured in the horizontal position with the correct orientation of the EP39 base.

	Horizontal		
	Min	Nom	Max
Voltage at lamp terminals (V, rms)	255	270	285
Lamp current (A, rms)		6.51	
Lamp wattage (W)		1650	

Copyright 2005 © American National Standard Lighting Group in affiliation with NEMA

Copyright National Electrical Manufacturers Association
Provided by IHS under license with NEMA
No reproduction or networking permitted without license from IHS
Not for Resale

1.4 Lamp Reignition Voltage Spike (Vrs) During Warm-up

Maximum Reignition Voltage Spike …….…….. 150 volts, peak

Electrical Conditions:
Supply voltage ……. 440 volts
Ballast short circuit current ……..…… 7.6 amperes
Impedance …… 57.9 ohms

1.5 Lamp Reignition Voltage (Vr) During Steady Operation

Maximum Reignition Voltage.....…….…… 470 volts

1.6 Lamp Starting Voltage and Warm-up Requirements

As an exception to Part I, Section 5.6, this lamp is measured in the horizontal position with the correct orientation of the EP39 base.

1.6.1 Without External Starting Circuit

Lamps shall start within the time specified at the ambient temperature indicated under the following test conditions:

Temperature	*Minimum OCV*		*Time*	*Probability of starting within the time specified*
	Vrms	*Vpeak*		
10°C ± 1°C (50°F ± 2°F)	440	622	120 s	98% of 0-hour lamps
-30°C ± 1°C (-22°F ± 2°F)	530	750	120 s	90% of 100-hour lamps

1.6.2 Lamp Warm-Up Requirements

Time to 95% of minimum lamp operating voltage…..……. 10 minutes

1.7 Reference ballast Characteristics

Rated input voltage…….…….. 460 V
Reference current……. 6.51 A
Impedance……. 47.9 Ω

2 DATA FOR BALLAST DESIGN

2.1 Requirements for Lag Ballasts

2.1.1 For Lamps Not Requiring an External Ignitor

Temperature	*Minimum OCV*		*Time*	*Probability of starting within the time specified*
	Vrms	*Vpeak*		
10°C ± 1°C (50°F ± 2°F)	440	622	120 s	98% of 0-hour lamps
-30°C ± 1°C (-22°F ± 2°F)	530	750	120 s	90% of 100-hour lamps

2.2 Requirements for Peak Lead Ballasts

2.2.1 For Lamps Not Requiring an External Ignitor

Temperature	*Minimum OCV*		*Time*	*Probability of starting within the time specified*
	Vrms	*Crest Factor*		
10°C ± 1°C (50°F ± 2°F)	370*	2.0	120 s	98% of 0-hour lamps
-30°C ± 1°C (-22°F ± 2°F)	410**	2.0	120 s	90% of 100-hour lamps

Copyright 2005 © American National Standard Lighting Group in affiliation with NEMA

Copyright National Electrical Manufacturers Association
Provided by IHS under license with NEMA
No reproduction or networking permitted without license from IHS
Not for Resale

* The rms open-circuit voltage may be reduced by 10 volts for each 0.1 increase of the voltage crest factor, down to 350 volts rms, as the lowest value.

** The rms open-circuit voltage may be reduced by 10 volts for each 0.1 increase in the voltage crest factor, down to 390 volts rms, as the lowest value.

2.2.3 Current Waveshape Characteristic Requirements for Peak Lead Ballasts

Current slope (di/dt), minimum…… 2.5 amperes per millisecond
Off time (OT), maximum…….. 2.75 milliseconds
Peak Current, maximum…….. 16 amperes
Overshoot (OS), maximum…….. 50 milliamperes

2.2.4 Minimum Sustaining Voltage (Vss) for Peak Lead Ballasts

Minimum Sustaining Voltage (Vss)							
	Current Slope (di/dt), amperes per millisecond, at I=0						
Off-time (milliseconds)	2.5	3.0	3.5	4.0	4.5	5.0	5.5
2.75	447	397	357	324	297	275	258
2.50	436	386	346	313	286	264	247
2.25	425	375	335	302	275	253	236
2.00	414	364	324	291	264	242	225
1.75	403	353	313	280	253	231	214
1.50	392	342	302	269	242	220	203

The values given in this table are derived from the equation: $Vss = C_1 + C_2 (OT) + C_3 e^{-0.41 di/dt}$ where:

Vss = minimum sustaining voltage in volts, (rms)
OT = Off-time in milliseconds
di/dt = Current slope at I=0 in amperes per millisecond
C1 = 59 C2 = 44 C3 = 745

2.3 Ignitor Requirements - NA

2.4 Starting Current Requirements

	Lag ballasts	Peak-lead ballasts
Minimum starting current, A rms	6.5	6.5
Maximum starting current, A rms	11.4	9.6

2.5 Current Crest Factor

Maximum Current Crest Factor…… 1.8

2.6 Maximum Voltage across Lamp Terminals

RMS	Peak	Peak Pulse
530	2150	NA

2.7 Lamp Operating Wattage

Design Center…….. 1650 watts

Range, 100-hour lamps…… 1320 to 1980 watts

3.0 INFORMATION FOR LUMINAIRE DESIGN ("CAUTION" of 7 (Part I) applies)

3.1 Voltage Rise, Luminaire Effect Limit

Lamp voltage change…….. 10 volts, rms

Copyright 2005 © American National Standard Lighting Group in affiliation with NEMA

Copyright National Electrical Manufacturers Association
Provided by IHS under license with NEMA
No reproduction or networking permitted without license from IHS
Not for Resale