


# ANSI C78.43-2004

**Revision and consolidation of ANSI C78.1372-1997, .1374-1997, .1375-1997, .1376-1997, .1377-1997, .1378-1997, .1379-1997, .1382-1997, .1384-1997, and .1650-2003**

# American National Standard

for electric lamps—

# Single-Ended Metal Halide Lamps

--`,,`,,`-`-`,,`,,`,`,,`---

Copyright National Electrical Manufacturers Association
Provided by IHS under license with NEMA
No reproduction or networking permitted without license from IHS

Not for Resale

--`,,`,,`-`-`,,`,,`,`,,`---

Copyright National Electrical Manufacturers Association
Provided by IHS under license with NEMA
No reproduction or networking permitted without license from IHS

Not for Resale

**ANSI C78.43-2004**

Revision and consolidation of ANSI C78.1372-1997, .1374-1997, .1375-1997, .1376-1997, .1377-1997, .1378-1997, .1379-1997, .1382-1997, .1384-1997, and .1650-2003

# American National Standard

Approved: May 5, 2004 Secretariat: ANSLG – National Electrical Manufacturers Association

*for electric lamps:*

## Single-Ended Metal Halide Lamps

An American National Standard implies a consensus of those substantially concerned with its scope and provisions. It is intended as a guide to aid the manufacturer, the consumer, and the general public. The existence of an American National Standard does not in any respect preclude anyone, whether he has approved the standard or not, from manufacturing, marketing, purchasing, or using products, processes, or procedures not conforming to the standards. Users are cautioned to obtain the latest editions.

The American National Standards Institute does not develop standards and will in no circumstances give an interpretation of any American National Standard. Moreover, no person shall have the right or authority to issue an interpretation of an American National Standard in the name of the American National Standards Institute.

**CAUTION NOTICE:** This American National Standard may be revised or withdrawn at any time. The procedures of the American National Standards Institute require that action be taken periodically to reaffirm, revise, or withdraw this standard. Purchasers of American National Standards may receive current information on all standards by calling or writing the American National Standards Institute.

Copyright 2004 © American National Standard Lighting Group -- NEMA

Copyright National Electrical Manufacturers Association
Provided by IHS under license with NEMA
No reproduction or networking permitted without license from IHS

Not for Resale

# American National Standard

Approval of an American National Standard requires verification by ANSI that the requirements for due process, consensus, and other criteria for approval have been met by the standards developer. An American National Standard implies a concensus of those substantially concerned with its scope and provisions. Consensus is established when, in the judgment of the ANSI Board of Standards Review, substantial agreement has been reached by directly and materially affected interests. Substantial agreement means much more than a simple majority, but not necessarily unanimity. Consensus requires that all views and objections be considered, and that a concerted effort be made toward their resolution. The existence of an American National Standard does not in any respect preclude anyone from manufacturing, marketing, purchasing, or using products, processes, or procedures not conforming to the standard. It is intended as a guide to aid the manufacturer, the consumer, and the general public.

The American National Standards Institute does not develop standards and will in no circumstances give an interpretation of any American National Standard. Moreover, no person shall have the right or authority to issue an interpretation of an American National Standard in the name of the American National Standards Institute. Requests for interpretations should be addressed to the secretariat or sponsor whose name appears on the title page of this standard.

**CAUTION NOTICE:** This American National Standard may be revised or withdrawn at any time. The procedures of the American National Standards Institute require that action be taken periodically to reaffirm, revise, or withdraw this standard. Purchasers of American National Standards may receive current information on all standards by calling or writing the American National Standards Institute.

Printed and distributed by:
Information Handling Services/Global Engineering Documents
15 Inverness Way East, Englewood, CO 80112-5776
Under contract with National Electrical Manufacturers Association

Copyright © 2004 by American National Lighting Group
In affiliation with National Electrical Manufacturers Association
All rights reserved.

No part of this publication may be reproduced in any
form, in an electronic retrieval system or otherwise,
without prior written permission of the publisher.
Printed in the United States of America



Copyright National Electrical Manufacturers Association
Provided by IHS under license with NEMA
No reproduction or networking permitted without license from IHS Not for Resale

# Foreword (This foreword is not part of American National Standard C78.43-2004).

Suggestions for improvement of this standard should be submitted to the Secretariat C78 American National Lighting Group of the National Electrical Manufacturers Association, 1300 North 17th Street, Suite 1847, Rosslyn, VA 22209.

This standard was processed and approved by the Accredited Standards Committee on Electric Lamps, C78, and its Work Group C78 WG 04 Committee approval of the standard does not necessarily imply that all committee members voted for that approval.

| Amendment / Change | CDV | RV |
|---|---|---|
| Revision and Consolidation | CDV 78(04)/4143 | RV 78(04)/4144V2 |
| Correction | CDV 78(04)/4180 | RV 78(04)/4181 |

**David Mullen, Chair, C78**
**Elliot Wyner, Technical Coordinator**
**Randolph N. Roy, Secretariat**
**Matthew C. Clark, Coordinating Editor**

Copyright 2004 © American National Standard Lighting Group -- NEMA


Copyright National Electrical Manufacturers Association
Provided by IHS under license with NEMA
No reproduction or networking permitted without license from IHS
Not for Resale

# Table of Contents

**Organization of this standard…… 6**

**PART I** General Requirements and Information

**1 Scope …….. 8**
**2 Normative references ……. 8**
**3 Definitions ……. 9**
**4 Methods of measurement……. 9**
**5 Lamp specifications…….. 9**
5.1 Lamp designations and description……9
5.2 Lamp physical characteristics……10
5.3 Operating requirements at 100 hours.. ……10
5.4 Lamp reignition voltage spike (Vrs) during warm-up ……. 11
5.5 Lamp reignition voltage (Vr) during steady operation ……. 11
5.6 Lamp starting voltage and warm-up requirements ……. 11
5.7 Reference ballast characteristics……11
**6 Information for ballast design……. 12**
6.1 Requirements for lag ballast……. 12
6.2 Requirements for peak-lead ballasts ……. 12
6.3 Ignitor requirements ……. 13
6.4 Starting current requirements……. 13
6.5 Current crest factor……. 13
6.6 Maximum peak voltage across lamp terminals……. 13
6.7 Lamp operating wattage……. 13
**7 Information for luminaire design ……. 14**
7.1 Lamp voltage rise limits……. 14
7.2 Lamp temperatures ……. 14
7.3 Lamp operating position ……. 14
7.4 End of life behavior…… ……14

**Part II** Maximum outline drawings

Figure #1 BD 17 (BD54), E17 (E54) for enclosed fixtures…… 16
Figure #2 BD 17 (BD54), E17 (E54) for open fixtures ..…… 17
Figure #3 T4.5 (T14)…….. 18
Figure #4 T6 (T19)…… 19
Figure #5 T15 (T48)…….. 20
Figure #6 E18 (E57)……..…… 21
Figure #7 ED23.5 (ED75)..……..…… 22
Figure #8 BT28 (BT90)…..…….…… 23
Figure #9 BT37 (BT118)……..….. 24
Figure #10 BT56 (BT180)……..……... 25
Figure #11 PAR20 (PAR63)…….. 26
Figure #12 PAR30 (PAR95)…….. 27
Figure #13 PAR38 (PAR121)…..…….. 29

Copyright 2004 © American National Standard Lighting Group -- NEMA 

Copyright National Electrical Manufacturers Association
Provided by IHS under license with NEMA
No reproduction or networking permitted without license from IHS
Not for Resale

**PART III** Single-Ended Lamp data sheets


| | |
|---|---|
| 39-watt, M130 | 31 |
| 50-watt, M110 | 34 |
| 70-watt, M98 | 37 |
| 100-watt, M90 | 40 |
| 150-watt, M102 | 43 |
| 175-watt, M57 | 46 |
| 175-watt, pulse-start, M152 | 49 |
| 250-watt, M58 | 52 |
| 250-watt, pulse-start, M153 | 55 |
| 320-watt, pulse-start, M154 | 58 |
| 400-watt, M59 | 61 |
| 400-watt, pulse-start, M155 | 64 |
| 1000-watt, M47 | 67 |
| 1500-watt, M48 | 70 |
| 1650-watt, M112 | 73 |


Copyright 2004 © American National Standard Lighting Group – NEMA


Copyright National Electrical Manufacturers Association
Provided by IHS under license with NEMA
No reproduction or networking permitted without license from IHS
Not for Resale

## Organization of this standard

This standard has been arranged in three parts:

**Part I** covers general requirements and information. It provides normative references and offers brief explanations of the meaning or the application of some of the numerical data given on the individual lamp data sheets in Part III of this standard. It also provides requirements that are common to all metal halide lamp types.

**Part II** contains the maximum outline drawings of each lamp size.

**Part III** contains individual single-ended lamp data sheets that provide the specific lamp, ballast, and luminaire requirements of each of the standardized single-ended metal halide lamp types.



Copyright National Electrical Manufacturers Association
Provided by IHS under license with NEMA
No reproduction or networking permitted without license from IHS Not for Resale

This Page Intentionally Left Blank

Copyright 2004 © American National Standard Lighting Group – NEMA 

Copyright National Electrical Manufacturers Association
Provided by IHS under license with NEMA
No reproduction or networking permitted without license from IHS
Not for Resale

# AMERICAN NATIONAL STANDARD

# For Electric Lamps

# Single-Ended Metal Halide Lamps

## PART I. General Requirements and Information

### 1 Scope

This standard sets forth the physical and electrical requirements for single-ended metal halide lamps operated on 60 Hz ballasts to ensure interchangeability and safety. The data given also provides the basis for the electrical requirements for ballasts and ignitors, as well as the lamp-related requirements for luminaires. This standard includes lamps whose arc tubes are made of quartz or ceramic materials. Luminous flux and lamp color are not part of this standard.

The following ANSI standards are being incorporated into this consolidation:

| | | |
|---|---|---|
| C78.1372 | 1997 | 70-Watt, M98 Single-ended Metal-Halide Lamps |
| C78.1374 | 1997 | 50-Watt, M110 Single-ended Metal-Halide Lamps |
| C78.1375 | 1997* | Metal Halide Lamps, Specifications for 400-Watt, M59 |
| C78.1376 | 1997* | Metal-Halide Lamp, 1000-Watt, M47 |
| C78.1377 | 1997* | Electric Lamps - 175-Watt, M57, Single-ended Metal-Halide Lamps |
| C78.1378 | 1997* | Electric Lamps - 250-Watt, M58 Single-ended Metal-Halide Lamps |
| C78.1379 | 1997* | Electric Lamps - 1500-Watt, M48 Single-ended Metal-Halide Lamps |
| C78.1382 | 1997 | Electric Lamps - 100-Watt, M90 Metal-Halide Lamps |
| C78.1384 | 1997 | Electric Lamps - 150-Watt, M102 Single-ended Metal-Halide Lamps |
| C78.1650 | 2003 | Electric Lamps – Pulse start Metal-Halide Lamps, 175-Watt M152, 250-Watt M153, 320-Watt M154, 400-Watt M155 |

* As Reaffirmed Feb. 2002

The following ANSI Lamp Codes that have been approved as standards by the American Standards Committee, C78 and its Working Group 4 (WG4) for High-Intensity Discharge Lamps, are included in this standard.

| | |
|---|---|
| 2002 | 39-Watt, M130 Single-Ended Metal-Halide Lamps |
| 2003 | 1650-Watt M112 Single-Ended Metal-Halide Lamps |

### 2 Normative references

The following standards contain provisions which, through reference in this text, constitute provisions of this American National Standard. At the time of publication, the editions indicated were valid. All standards are subject to revision, and parties to agreements based on this American National Standard are encouraged to investigate the possibility of applying the most recent editions of the standards indicated below.

Copyright 2004 © American National Standard Lighting Group – NEMA 

Copyright National Electrical Manufacturers Association
Provided by IHS under license with NEMA
No reproduction or networking permitted without license from IHS
Not for Resale

ANSI C78.30-1997, *Procedure for use in preparation of lamp space drawings*
ANSI C78.379-1994, C*lassification of beam patterns of reflector lamps*
ANSI C78.380-2002, *Electric lamps - High-intensity discharge lamps - Method of designation*
ANSI C78.387-1995, *Electric lamps – Metal-Halide lamps - Methods of measuring characteristics*
ANSI C79.1-2002, *Nomenclature for glass bulbs intended for use with electric lamps*
ANSI C81.61-1990, *Electric lamp bases*
ANSI C81.62-1991, *Lampholders for electric lamps*
ANSI C81.63-1991, *Gauges for electric lamp bases and lampholders*
ANSI C81.64-1993, *Guidelines and general information for electric lamp bases, lampholders, and gauges*
ANSI C82.4-2001, *Ballasts for high-intensity discharge and low-pressure sodium lamps (multiple supply type)*
ANSI C82.5-1990, *Reference ballasts for high-intensity discharge lamps*
ANSI C82.6-1985, *Ballasts for high-intensity discharge lamps - Methods of measurement*
ANSI C82.9-1996, *Definitions for high-intensity discharge and low-pressure sodium lamps, ballasts, and transformers*
ANSI/UL1598-2000, *Standard for Safety, High-Intensity-Discharge Lighting Luminaires*
ANSI/IEC C78.62035-2002, Discharge Lamps (Excluding Fluorescent Lamps)- Safety Specifications

## 3 Definitions

Definitions of single-ended metal halide lamp terms used in this standard can be found in ANSI C82.9.

## 4 Methods of measurement

Measurement of the electrical characteristics and the bulb and base temperatures of metal halide lamps shall be made in accordance with ANSI C78.387.

## 5 Lamp Specifications (Data Sheets, Section 1)

Lamps must meet the requirements contained within ANSI/IEC C78.62035 as well as the specifications contained in this standard.

### 5.1 Lamp Designations and Descriptions

#### 5.1.1 Lamp Designations

Metal halide designations are assigned in accordance with ANSI C78.380. Note that the number (two or three digits) following the first upper case letter in the designation, indicates a unique set of electrical characteristics. Following the lamp number is a slash followed by a luminaire characteristic letter. Operating position limitations are as indicated on the lamp marking.

Copyright 2004 © American National Standard Lighting Group – NEMA 

Copyright National Electrical Manufacturers Association
Provided by IHS under license with NEMA
No reproduction or networking permitted without license from IHS
Not for Resale

### 5.1.2 Bulb Designation

Bulb designations are defined in ANSI C79.1. Due to the long-term use of the conventional method of designation, its use will continue in this standard with the metric designation in parenthesis. In Part III of this standard, an "E" bulb designation includes E-, ED-, and ET-bulb shapes; similarly, a "B" bulb designation includes B-, BD-, and BT-bulb shapes.

Note that the bulb sizes listed on the lamp data sheets are intended to correspond with the common sizes listed in ANSI C79.1. The "nominal bulb diameter" shown on the lamp data sheets indicates the nominal dimension in SI units, with the English equivalent in parentheses. The bulb designation may not correspond directly with the actual nominal dimension.

### 5.1.3 Maximum Outline Drawings

The maximum outline drawings in Part II of this standard show for each bulb-base-MOL category the maximum limits of the space that may be occupied by any part of the bulb, assuming a fixed base position. They do not define the actual bulb shape. The limits shown take into account the maximum bulb dimensions and the possible eccentricity of the bulb with respect to the base. The dashed lines indicate typical bulb shapes. A lamp with its base in a fixed position shall remain within the limits of the outline in the relevant maximum outline drawing. Maximum outline drawings are produced in accordance with ANSI C78.30.

### 5.1.4 Base Specifications

Requirements for electrical lamp bases are specified in ANSI C81.61.

## 5.2 Lamp Physical Characteristics

### 5.2.1 Physical and Dimensional Requirements

Lamps shall satisfy the requirements on the relevant lamp data sheet. The critical lamp dimensions are given in SI units, with the English unit equivalent in parentheses.

### 5.2.2 Luminaire and Temperature Requirements

The luminaire characteristic (open, enclosed, etc), maximum permissible bulb temperature, and maximum permissible base temperature for each lamp type are listed in the individual lamp data sheets. Concerning the maximum temperature limits for the lamp bulb and base, note that luminaire design must be such that these maximum temperatures are not exceeded.

## 5.3 Operating Requirements at 100 hours

The lamp operating characteristics of 1.3 in the data sheets apply to bare lamps operating on a reference ballast at an ambient temperature of 25ºC ± 5ºC (77ºF ± 9ºF). These requirements apply to new lamps that have operated for 100 hours. The lamps shall be operated vertically base up, unless otherwise designated by the lamp manufacturer. See ANSI C78.387.

Copyright 2004 © American National Standard Lighting Group – NEMA 

Copyright National Electrical Manufacturers Association
Provided by IHS under license with NEMA
No reproduction or networking permitted without license from IHS
Not for Resale

### 5.4 Lamp Reignition Voltage Spike (Vrs)

The reignition voltage spike during warm-up for any lamp (See ANSI C78.387) shall not exceed throughout life the values listed when using the electrical conditions that are defined for the individual lamps. The reactor ballast used shall have a power factor of 0.075 ± 0.005 and meet the linearity specifications of ANSI C82.5.

### 5.5 Lamp Reignition Voltage (Vr)

The reignition voltage for any lamp shall not exceed the value provided for the individual lamps throughout life when operated on its reference ballast in accordance with ANSI C78.387.

### 5.6 Lamp Starting and Warm-up requirements

See ANSI C78.387 for measurement procedures. Single-ended lamps shall be measured in the vertical, base-up position unless otherwise designated by the lamp manufacturer.

#### 5.6.1 Starting Voltage

Lamps shall start within the time period specified at the ambient temperatures indicated when the sine-wave open-circuit test voltages from the data sheet of Part III or IV are applied. Lamps shall meet these requirements throughout their lifetime. For lamps requiring external ignitors, the pulse characteristics are measured at the terminals of the lampholder. For screw-based lamps with an E26 or E39 base, the pulse is applied to the center terminal of the lamp base with the shell grounded. For pin-based (G8.5 and G12) lamps, the pulse shall be applied to either base contact.

#### 5.6.2 Warm-up Time

A bare lamp operating in still air at an ambient temperature of 25ºC ± 5ºC (77ºF ± 9ºF) under the conditions described in ANSI C78.387 shall reach the minimum voltage within the time period specified on the relevant lamp data sheet.

### 5.7 Reference Ballast Requirements

The reference ballast provides a standard means of comparison and is used to ensure reproducible results when measuring lamp characteristics. Reference ballasts for metal halide lamps are series reactor types, and do not include any step-up transformation. Only reference ballasts for 60 Hz operation, with a power factor of 0.075 ± 0.005, shall be used. The general requirements for reference ballasts are outlined in ANSI C82.5.

The specific values for each reference ballast type are given on the relevant lamp data sheet. A momentary higher open-circuit voltage, auxiliary starting circuit, or Tesla coil may be necessary to start the lamp where an auxiliary starting circuit is not provided.

Copyright 2004 © American National Standard Lighting Group – NEMA 

Copyright National Electrical Manufacturers Association
Provided by IHS under license with NEMA
No reproduction or networking permitted without license from IHS
Not for Resale

# 6 Information for Ballast Design (Data Sheets, Section 2)

A ballast shall meet the following requirements throughout its supply voltage range (the range shall not be less than 95% to 105% of its rated voltage). These requirements apply to ballasts integral-to-luminaire as well as remotely connected ignitors. Capacitive loading across the lampholder terminals may be necessary to simulate remote mounting circuit characteristics. For screw-based lamps requiring a starting pulse, the pulse application shall be to the eyelet or center lamp holder terminal.

For additional ballast requirements see ANSI C82.4, for Methods of Measurement see C82.6, and for Definitions see C82.9.

## 6.1 Requirements for Lag Ballasts

A lag ballast shall meet the voltage requirements in order to reliably start and sustain lamps within the time periods and ambient temperatures indicated.

### 6.1.1 Without Auxiliary Starting Circuit

A lag ballast shall supply the minimum open-circuit voltage specified on the relevant lamp data sheet.

### 6.1.2 With Auxiliary Starting Circuits

A lag ballast shall supply the minimum open-circuit and ignitor pulse voltages specified on the relevant lamp data sheet.

## 6.2 Requirements for Peak-Lead Ballasts

A peak-lead ballast shall meet the voltage requirements in order to reliably start and sustain lamps within the time periods and ambient temperatures indicated.

### 6.2.1 Without Auxiliary Starting Circuits

A peak-lead ballast shall supply the minimum open-circuit voltage specified on the relevant lamp data sheet.

### 6.2.2 With Auxiliary Starting Circuits

A peak-lead ballast shall supply the minimum open-circuit and ignitor pulse voltages specified on the relevant lamp data sheet.

### 6.2.3 Current Wave-shape Characteristics

Current wave-shape characteristics required to sustain the lamp during starting and steady state operation are specified for peak lead ballasts in the applicable lamp data sheets. Measurements are with a “stiff” supply that regulates voltage within 0.5%. Current slope di/dt is measured within a 100-microsecond window centered at zero crossing.



Copyright National Electrical Manufacturers Association
Provided by IHS under license with NEMA
No reproduction or networking permitted without license from IHS Not for Resale

### 6.2.4 Minimum Sustaining Voltage (Vss)

A ballast at minimum rated line input shall meet the minimum sustaining voltage as specified in the applicable lamp data sheet in order to sustain the lamp during starting and steady state operation. Measurements are with a “stiff” supply that regulates voltage within 0.5%.

## 6.3 Ignitor Requirements

The starting pulse (Defined in C82.9) shall be applied to the center terminal of the lamp base with the wiring between ballast and lampholder (or its equivalent capacitance) connected. See the ignitor manufacturer's literature for the appropriate value of equivalent capacitance. The pulse, measured at the lampholder terminals across a dummy lamp load of 20 pF, shall have the characteristics provided in the data sheets.

## 6.4 Starting Current Requirements

Minimum and maximum starting currents are provided on the lamp data sheets. Starting current shall be measured 5 to 15 seconds after the lamp arc has started.

## 6.5 Current Crest Factor

The lamp current crest factor, during warm-up and operation of a reference lamp shall not exceed the value indicated on the relevant lamp data sheet.

## 6.6 Maximum Voltage Across Lamp Terminals

A ballast shall not provide to the lamp terminals a voltage in excess of the values specified on the relevant lamp data sheet. RMS and peak voltages are measured without the ignitor.

## 6.7 Lamp Operating Wattage

The operating wattage of a bare lamp, measured in its designated operating position on a ballast throughout its range of rated supply voltages in a still air ambient of 25°C ± 5°C (77°F ± 9°F), shall remain within the wattage limits of the relevant lamp data sheet. Lamps shall operate within these limits throughout the full range of lamp voltage tolerance.

To meet these limits, a ballast at 100% rated supply voltage shall operate a reference lamp within ± 5% of the wattage delivered to the same lamp in the same position by a reference ballast. Also the ballast, throughout the supply voltage range for which it was intended, shall operate a reference lamp within ± 15% of the wattage delivered to that reference lamp by a reference ballast at its rated voltage.

***NOTE:** Specific wattage limits are based on normal tolerance distributions of lamp voltage, ballast adjustment, and supply voltage. If these tolerances are extreme and in the same direction, the specified wattage limits could be exceeded.

For additional limits of ballast performance, see ANSI C82.4.

Copyright 2004 © American National Standard Lighting Group – NEMA 

Copyright National Electrical Manufacturers Association
Provided by IHS under license with NEMA
No reproduction or networking permitted without license from IHS
Not for Resale

### 6.7.1 Minimum Lamp Operating Wattage

Operation of metal halide lamps below the limits of this standard will lower lamp efficacy and may result in color shift, arc instability, flicker and reduced lamp life. The lamp manufacturer shall be consulted before operating metal halide lamps at reduced wattage or with dimming circuits.

## 7 Information for Luminaire Design (Data Sheets, Section 3)

**CAUTION:** To insure correct thermal operation, UV protection and non-passive failure protection, the luminaire shall be designed in accordance with lamp manufacturers' recommendations for use and application.

Metal-halide lamps are constructed of a glass or quartz envelope with an internal arc tube. These arc tubes operate under high pressure (typically 5 atmospheres or greater) and temperature (typically 900°C or greater). The arc tube may unexpectedly rupture due to internal causes or external factors. When this occurs, the glass or quartz envelope surrounding the arc tube may break and extremely hot particles from the arc tube and fragments from the envelope may be discharged into the fixture enclosure and possibly the surrounding environment, thereby creating a risk of personal injury or other hazard.

Certain metal halide lamps are designed to contain all particles within the outer bulb should an arc tube rupture occur. Such lamps that have passed containment testing, per ANSI C78.387 Annex A for quartz arc tubes and per an annex B for ceramic arc tubes, may be labeled with a luminaire characteristic letter “O”, e.g. M59/O. Luminaire characteristic letters are listed in ANSI C78.380, Annex B.

Also see UL 1598 for requirements on the construction of luminaires.

### 7.1 Lamp voltage rise limits

The lamp voltage of reference lamps, operating on a sinusoidal power supply of 60 Hz with the specified reference ballast at its rated input voltage, shall not increase more than the value given on the relevant lamp data sheet when going from stabilized bare lamp operation to stabilized operation in a luminaire.

### 7.2 Lamp temperatures

Luminaire design shall be such that the maximum lamp temperatures given in the physical characteristics section of the relevant lamp data sheet are not exceeded.

### 7.3 Lamp operating position

A luminaire shall maintain the lamp within its allowable operating position limits.

### 7.4 End of Life Behavior

Additional information is provided on the data sheet for 39W, M130.

Copyright 2004 © American National Standard Lighting Group – NEMA


Copyright National Electrical Manufacturers Association
Provided by IHS under license with NEMA
No reproduction or networking permitted without license from IHS
Not for Resale

# PART II Maximum Outline Drawings



Copyright National Electrical Manufacturers Association
Provided by IHS under license with NEMA
No reproduction or networking permitted without license from IHS
Not for Resale

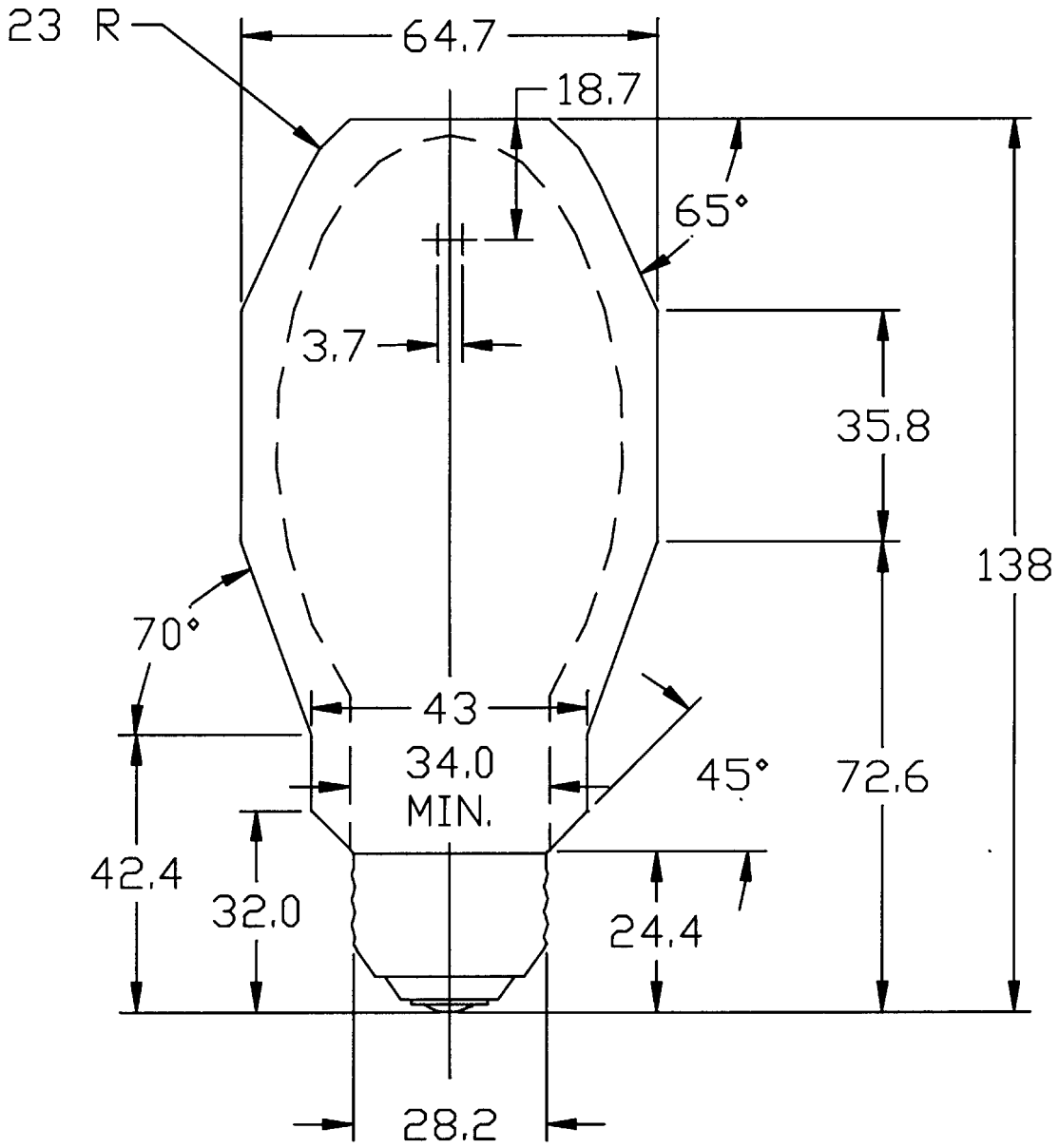


Figure 1
Maximum Outline Drawing

BD17 (BD54), ED17 (ED54) for Enclosed Luminaires



Copyright National Electrical Manufacturers Association
Provided by IHS under license with NEMA
No reproduction or networking permitted without license from IHS
Not for Resale

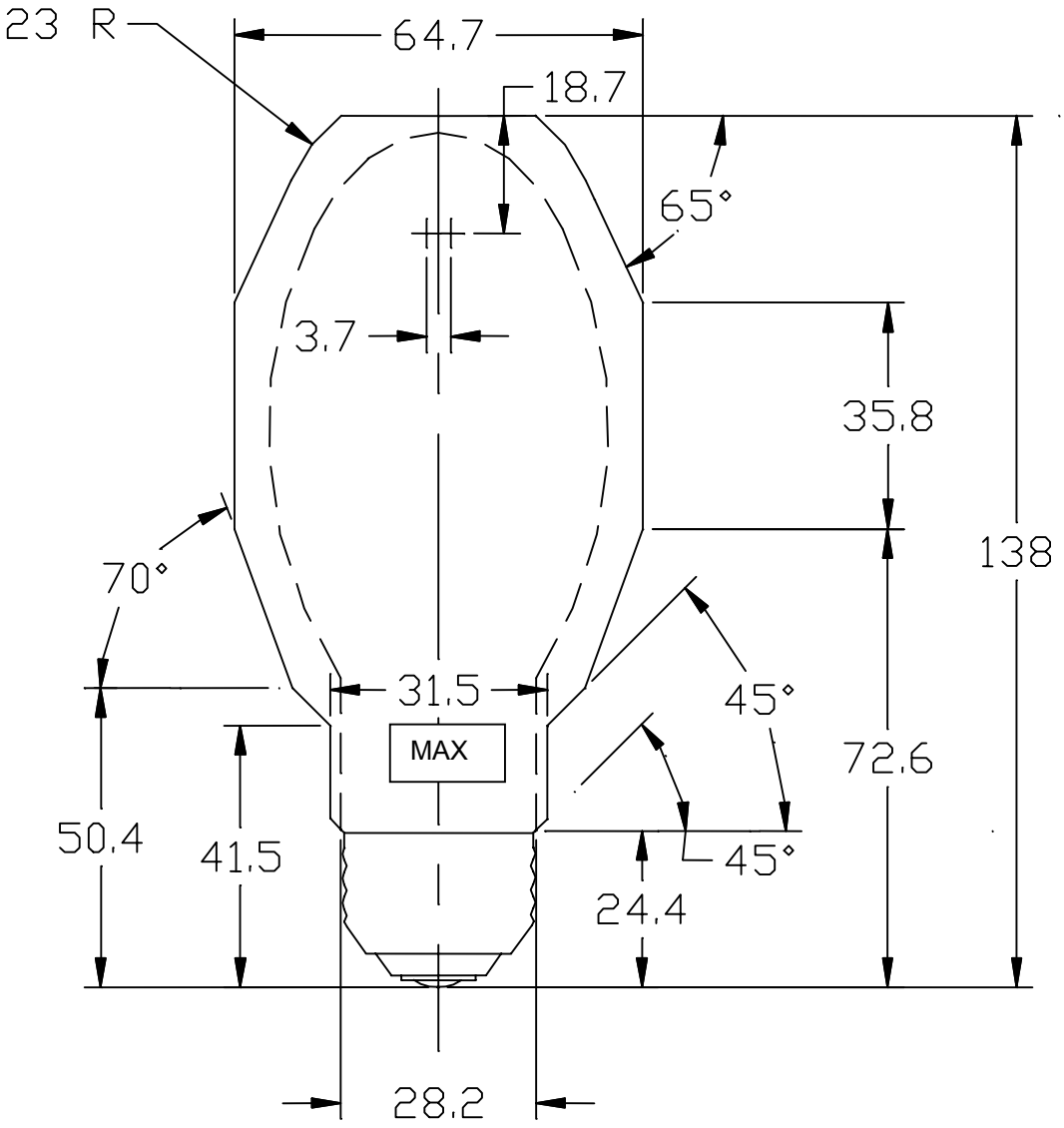


Figure 2
Maximum Outline Drawing

BD17 (BD54), ED17 (ED54) for Open Luminaires



Copyright National Electrical Manufacturers Association
Provided by IHS under license with NEMA
No reproduction or networking permitted without license from IHS
Not for Resale

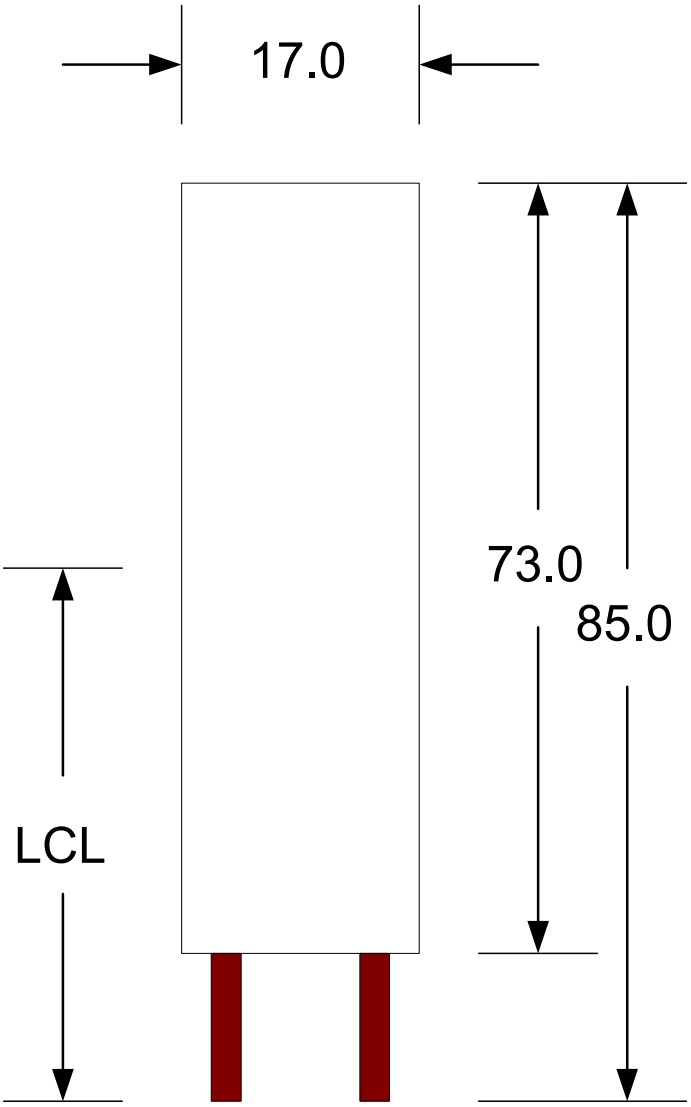


Figure 3
Maximum Outline Drawing

T4.5 (T14)



Copyright National Electrical Manufacturers Association
Provided by IHS under license with NEMA
No reproduction or networking permitted without license from IHS
Not for Resale

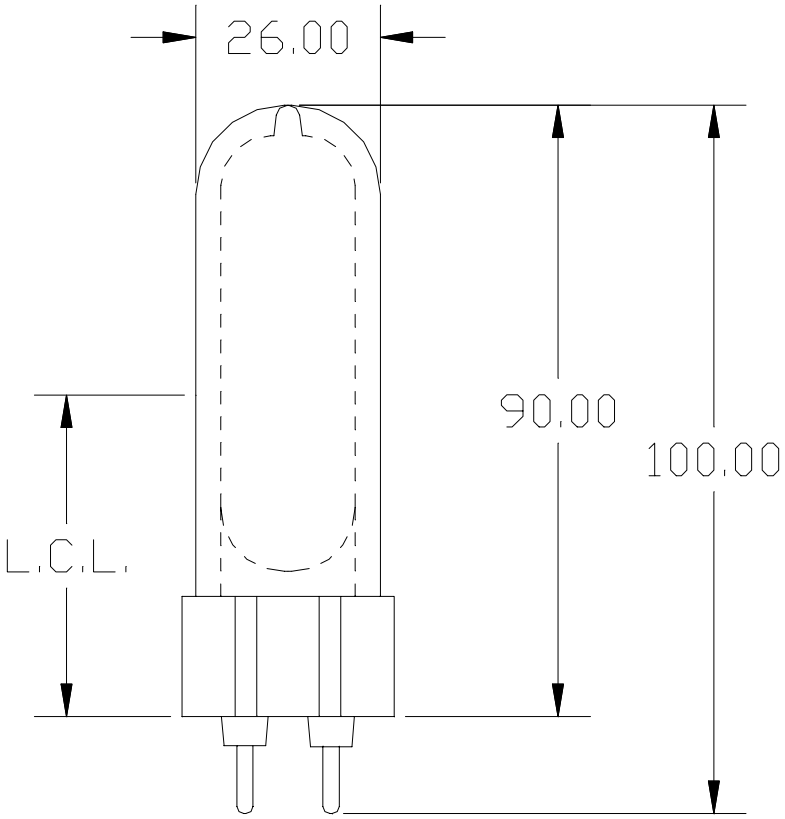


Figure 4
Maximum Outline Drawing

T6 (T19)



Copyright National Electrical Manufacturers Association
Provided by IHS under license with NEMA
No reproduction or networking permitted without license from IHS
Not for Resale

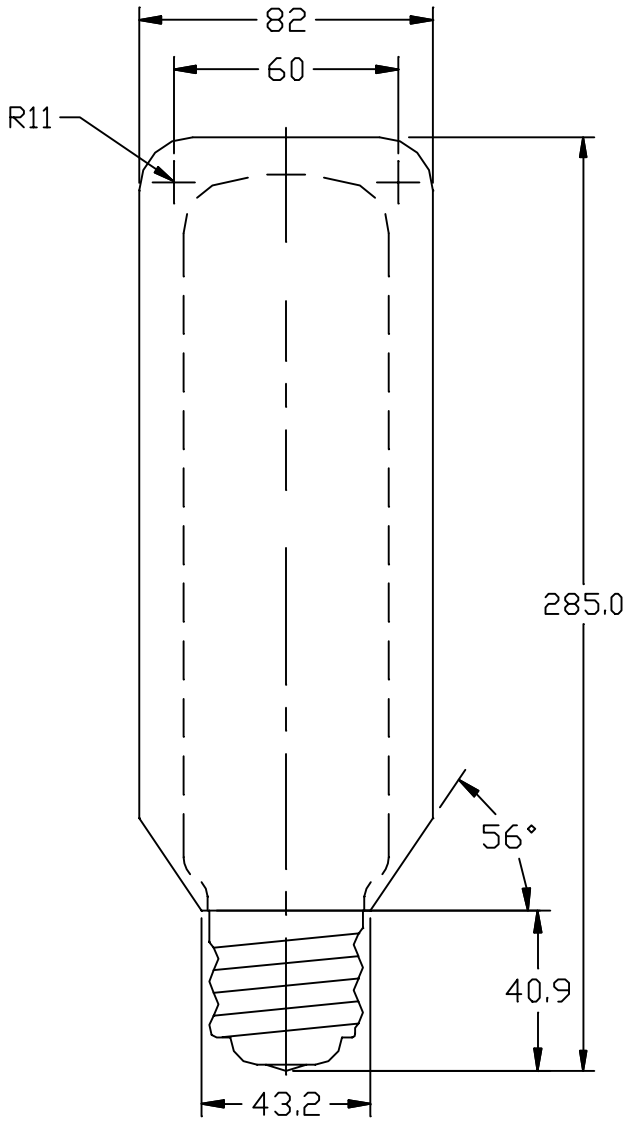


Figure 5
Maximum Outline Drawing

T15 (T48)



Copyright National Electrical Manufacturers Association
Provided by IHS under license with NEMA
No reproduction or networking permitted without license from IHS
Not for Resale

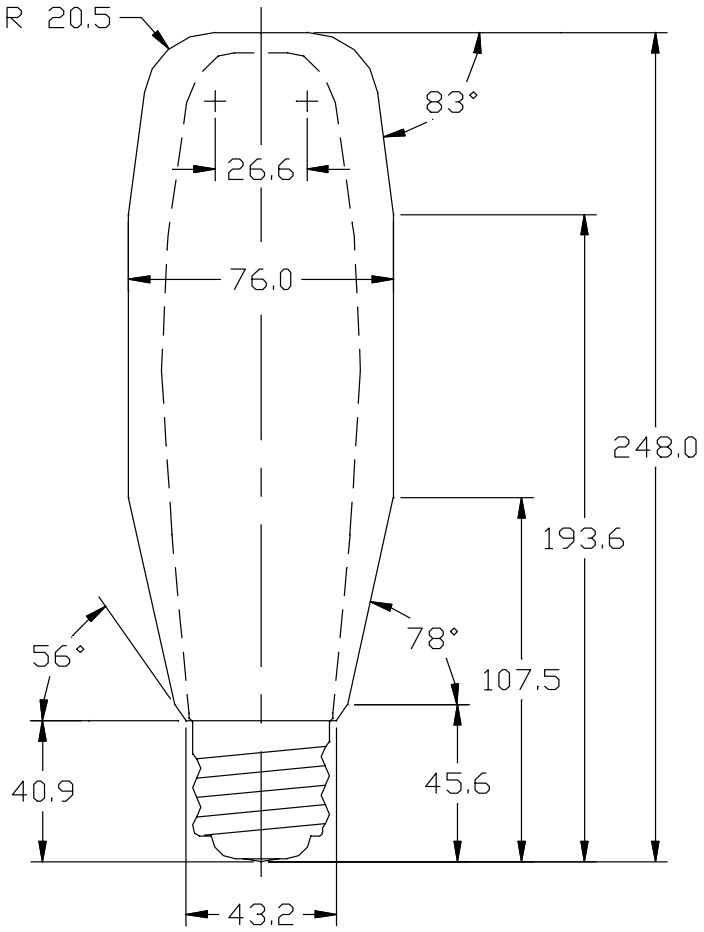


Figure 6
Maximum Outline Drawing

E18 (E57)



Copyright National Electrical Manufacturers Association
Provided by IHS under license with NEMA
No reproduction or networking permitted without license from IHS
Not for Resale

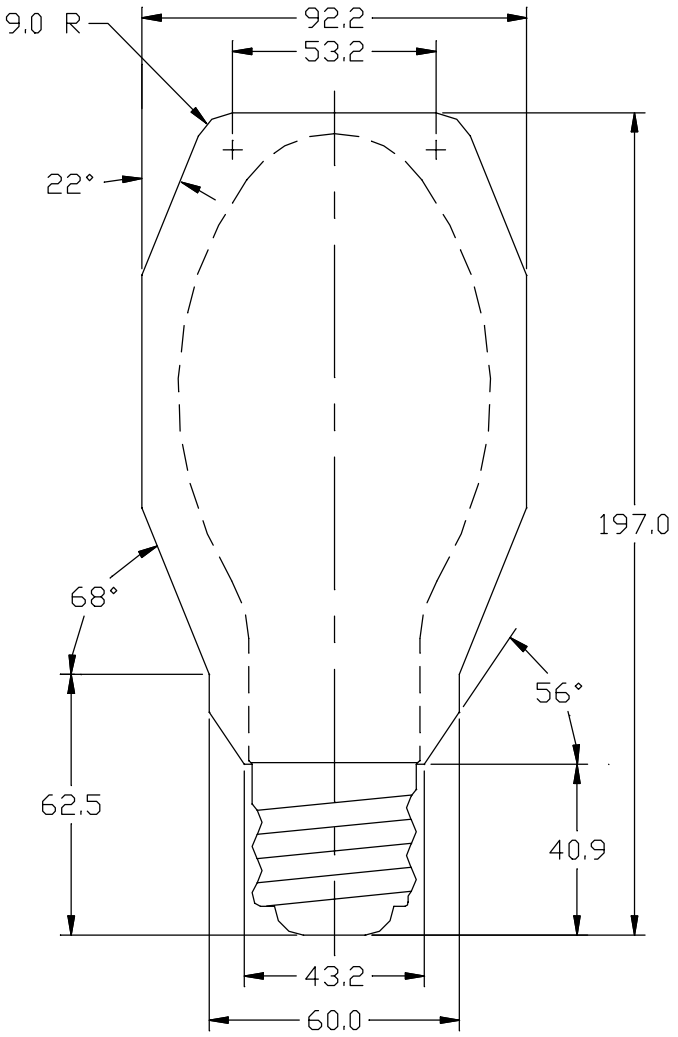


Figure 7
Maximum Outline Drawing

ED23.5 (ED75)



Copyright National Electrical Manufacturers Association
Provided by IHS under license with NEMA
No reproduction or networking permitted without license from IHS
Not for Resale

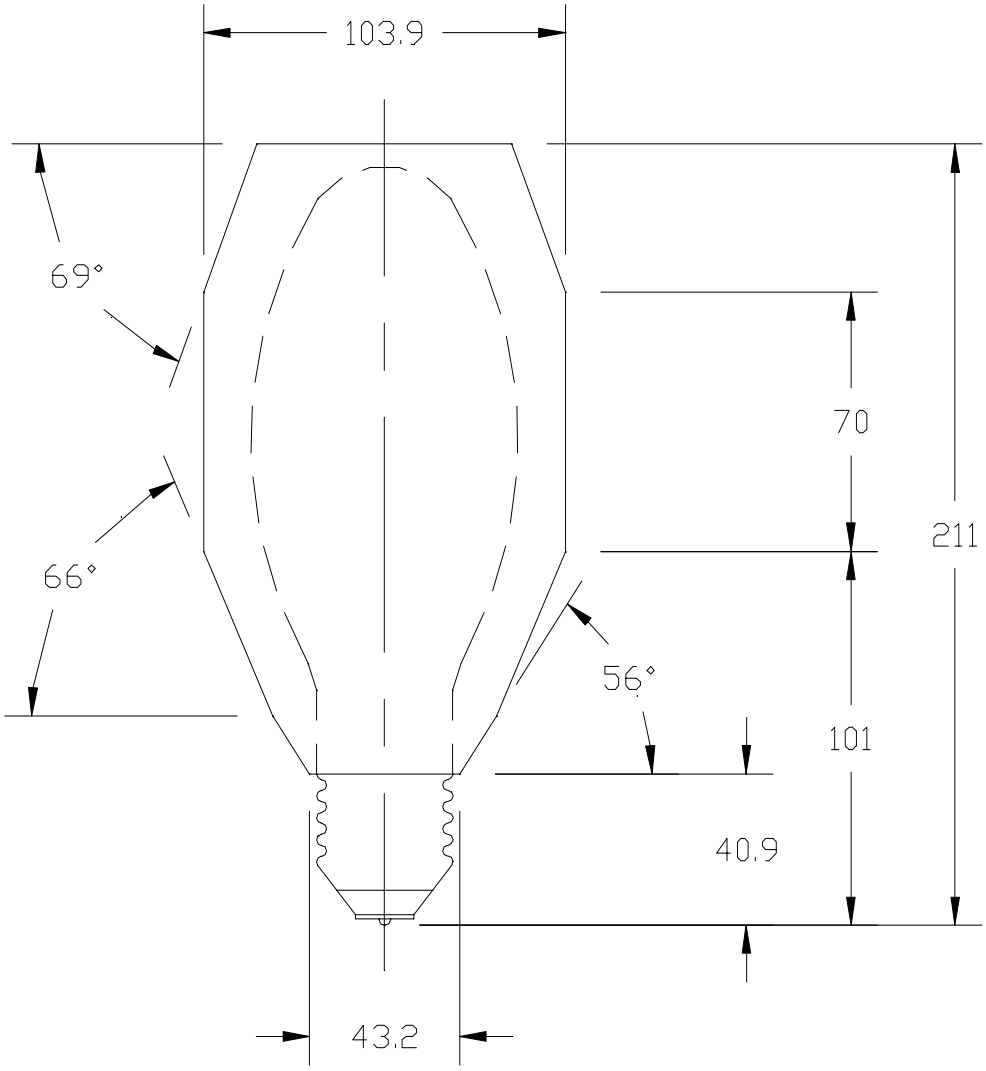


Figure 8
Maximum Outline Drawing

BT28 (BT90), ED28 (ED90)



Copyright National Electrical Manufacturers Association
Provided by IHS under license with NEMA
No reproduction or networking permitted without license from IHS
Not for Resale

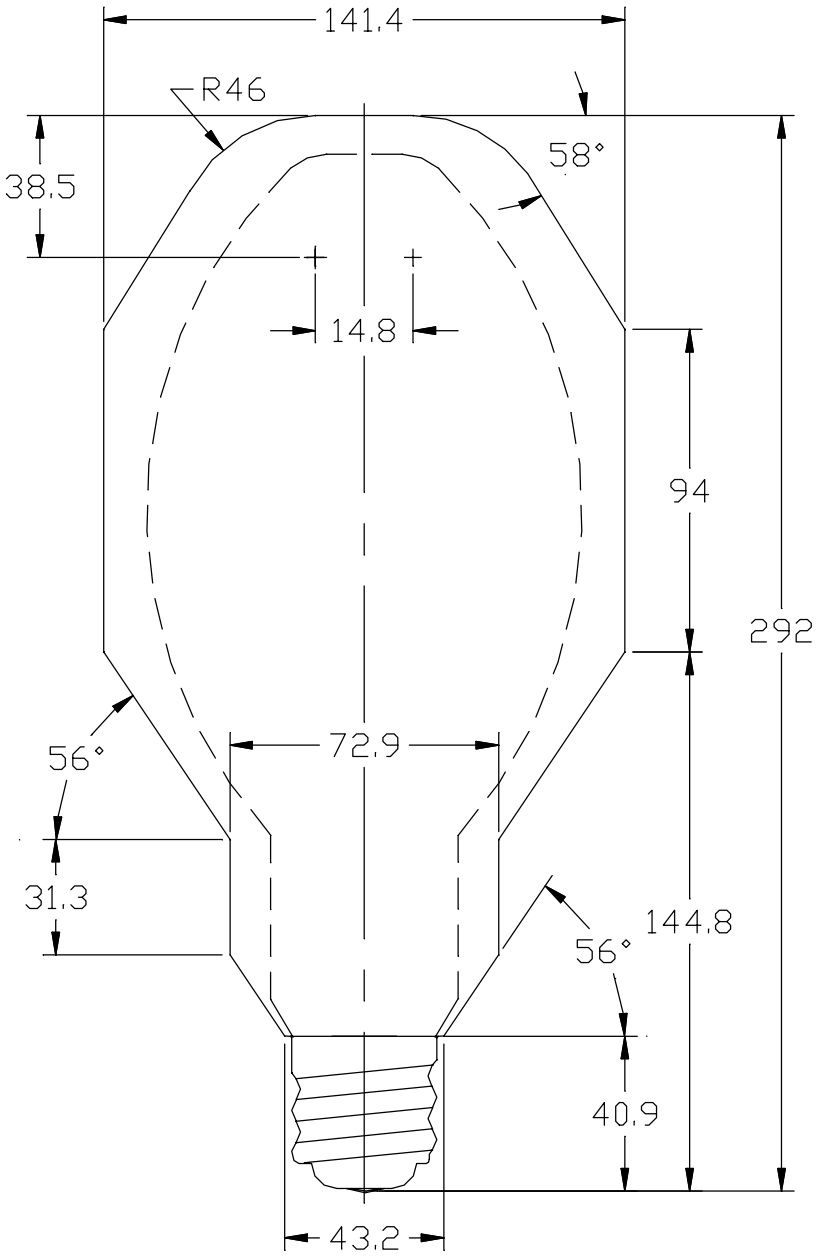


Figure 9
Maximum Outline Drawing

BT37 (BT118) or ED37 (ED118)



Copyright National Electrical Manufacturers Association
Provided by IHS under license with NEMA
No reproduction or networking permitted without license from IHS
Not for Resale

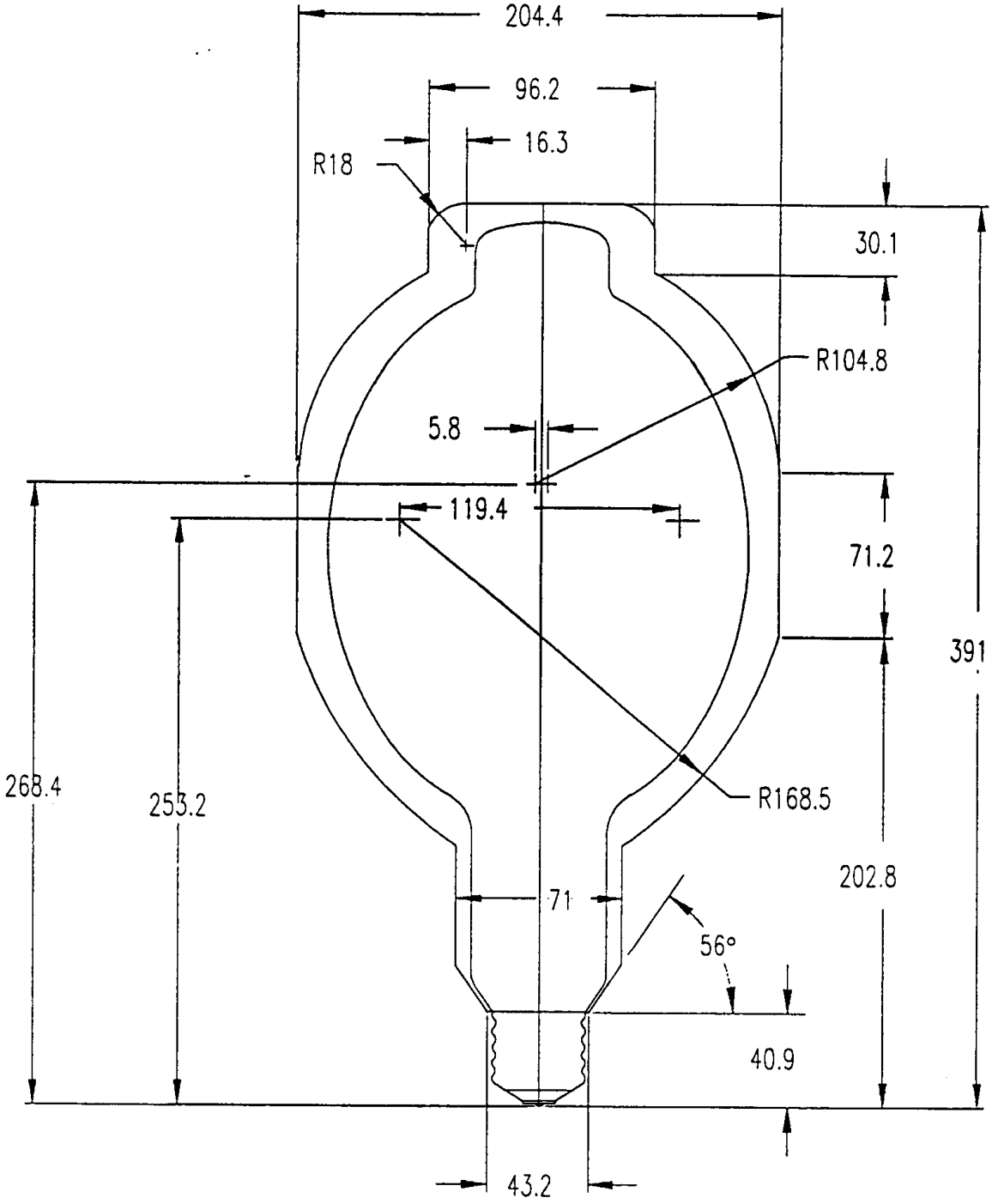


Figure 10
Maximum Outline Drawing

BT56 (BT180)



Copyright National Electrical Manufacturers Association
Provided by IHS under license with NEMA
No reproduction or networking permitted without license from IHS
Not for Resale

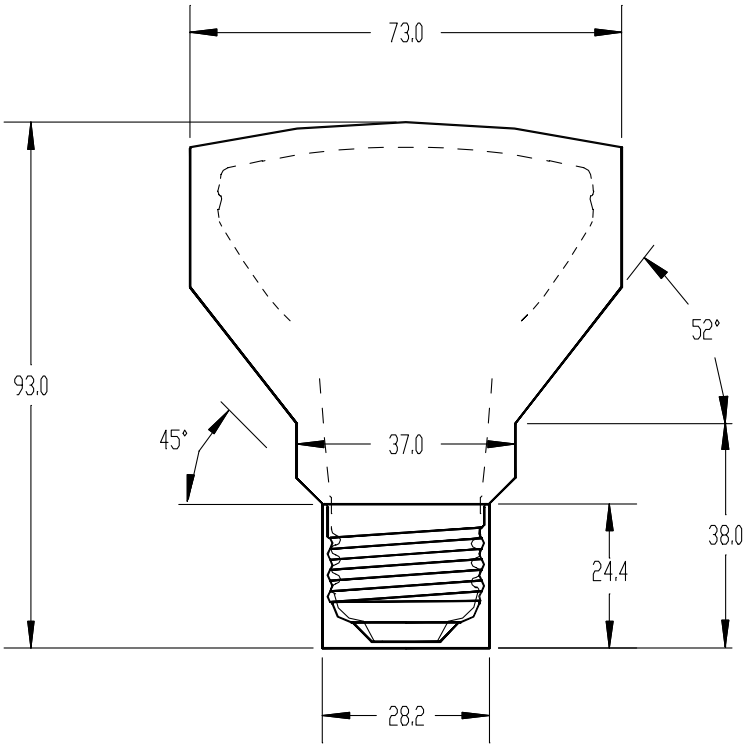


Figure 11
Maximum Outline Drawing

PAR20 (PAR63)



Copyright National Electrical Manufacturers Association
Provided by IHS under license with NEMA
No reproduction or networking permitted without license from IHS
Not for Resale

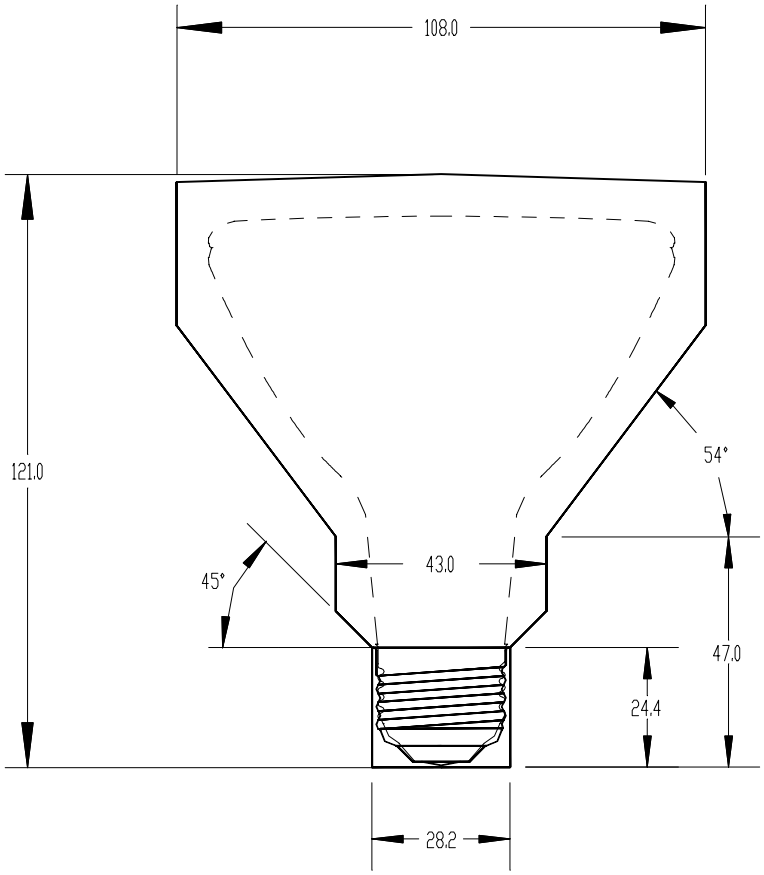


Figure 12
Maximum Outline Drawing

PAR30 (PAR95)



Copyright National Electrical Manufacturers Association
Provided by IHS under license with NEMA
No reproduction or networking permitted without license from IHS
Not for Resale

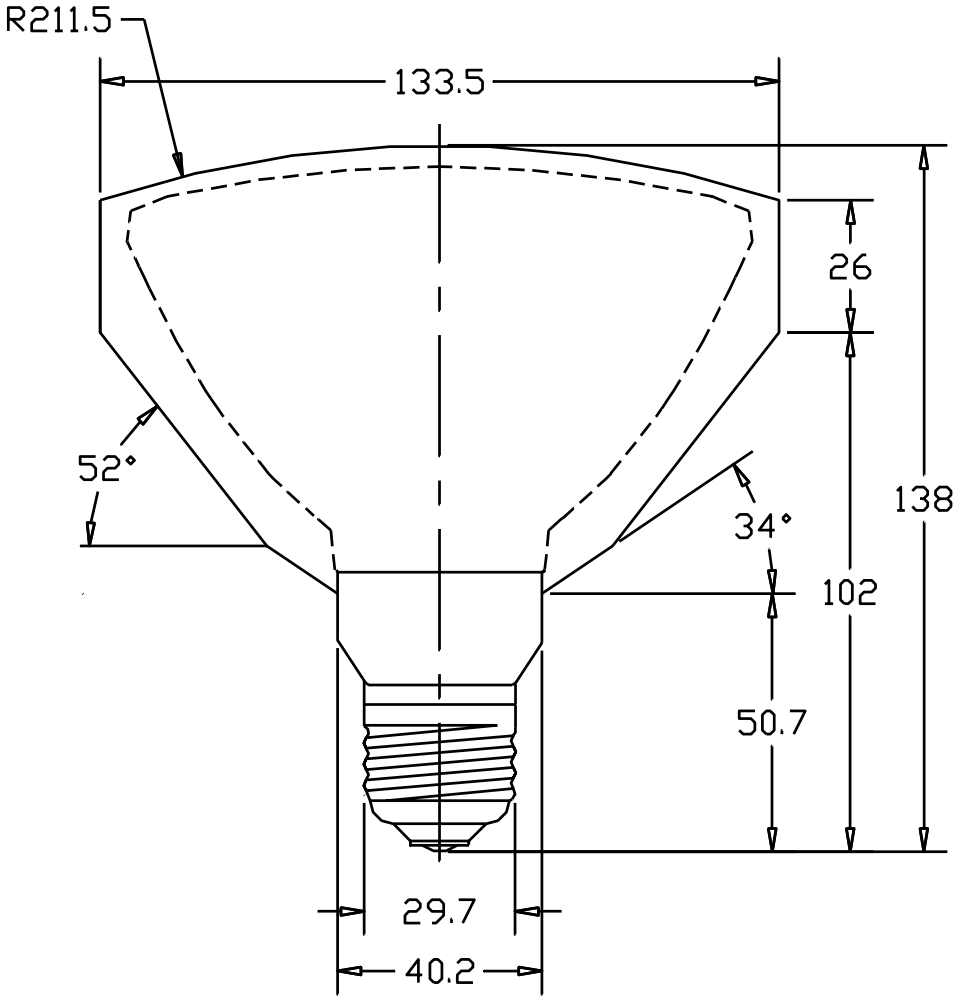


Figure 13
Maximum Outline Drawing

PAR38 (PAR121)



Copyright National Electrical Manufacturers Association
Provided by IHS under license with NEMA
No reproduction or networking permitted without license from IHS
Not for Resale

# This Page Intentionally Left Blank



Copyright National Electrical Manufacturers Association
Provided by IHS under license with NEMA
No reproduction or networking permitted without license from IHS Not for Resale

# PART III Single-Ended Lamp data sheets



Copyright National Electrical Manufacturers Association
Provided by IHS under license with NEMA
No reproduction or networking permitted without license from IHS Not for Resale

**39 Watt, M130 Single-Ended Metal Halide Lamp**

## 1 LAMP SPECIFICATIONS

### 1.1 Lamp Designations and Descriptions

| Designation | Bulb | Max Outline Drawing | Base |
|---|---|---|---|
| M130/E-PS | T4.5 (T14) | 3 | G8.5 |
| M130/E-PR | T6 (T19) | 4 | G12 |
| M130/O-ZL | ED17 (ED54) | 2 | E26/24 |
| M130/O-KK | PAR20 (PAR63) | 11 | E26/24 |
| M130/O-KE | PAR30 (PAR95) | 12 | E26/24 |

### 1.2 Lamp Physical Characteristics

| | *M130/O-KE* | *M130/O-KK* | *M130/E-PR* | *M130/O-ZL* | *M130/E-PS* |
|---|---|---|---|---|---|
| Bulb | PAR30 (PAR95) | PAR20 (PAR63) | T6 (T19) | ED17 (ED54) | T4.5 (T14)[4] |
| Base | E26/24 | E26/24 | G12 | E26/24 | G8.5 |
| Nominal diameter[1] | 95 (3.75) | 63 (2.5) | 19 (0.75) | 54 (2.13) | 14 (0.55) |
| MOL[1] | 121 (4.76) | 93 (3.66) | 100 (3.94) | 138 (5.43) | 85 (3.35) |
| LCL[1] | NA | NA | 56 ± 2 (2.20 ± 0.08) | 86 ± 3 3.39 ± 0.12 | 52 ± 2 (2.05 ± 0.08) |
| Effective arc length[1] | NA | NA | 4 - 6 (0.16 – 0.24) | 4 - 6 (0.16 – 0.24) | 4 - 6 (0.16 – 0.24) |
| Operating position limitation | Universal | Universal | Universal | Universal | Universal |
| Max electrode tip deviation[2] | NA | NA | 3 | 3 | 3 |
| Max permissible bulb temperature[3] | 300 (572) | 300 (572) | 500 (932) | 400 (752) | 550 (1022) |
| Max permissible base temperature[3] | 200 (392) | 200 (392) | 280 (536) | 190 (374) | 250 (482) |
| Max permissible lens seal temperature[3] | 160 (320) | 160 (320) | NA | NA | NA |

[1] Dimensions are in mm, with equivalent inches within parentheses
[2] Maximum electrode tip deviation is from base axis (apex at base eyelet), measured in degrees
[3] Temperatures are in ºC, with equivalent ºF within parentheses
[4] Some manufacturers use tubing up to 15mm outer diameter.

### 1.3 Operating Requirements at 100 Hours

| | Min | Nom | Max |
|---|---|---|---|
| Voltage at lamp terminals (V, rms) | 80 | 90 | 100 |
| Lamp current (A, rms) | | 0.53 | |
| Lamp wattage (W) | | 39 | |


Copyright 2004 © American National Standard Lighting Group – NEMA


Copyright National Electrical Manufacturers Association
Provided by IHS under license with NEMA
No reproduction or networking permitted without license from IHS
Not for Resale

### 1.4 Lamp Reignition Voltage Spike (Vrs) During Warm-up

Maximum Reignition Voltage Spike ……. 250 volts

Electrical Conditions:
Supply voltage ……. 300 volts
Ballast short circuit current …… 0.72 amperes
Impedance …… 415 ohms

### 1.5. Lamp Reignition Voltage (Vr) During Steady Operation

Maximum Reignition Voltage.....……. 250 volts

### 1.6 Lamp Starting Voltage and Warm-up Requirements

### 1.6.1 Lamp Starting Voltage Requirements as a function of time and temperature

Lamps shall start within the time specified at the ambient temperature indicated when the minimum open-circuit test voltages and the minimum starting pulse, Sec. 2.3, are applied.

| *Temperature* | *Minimum OCV* | | *Time* | *Probability of starting within the time specified* |
|---|---|---|---|---|
| | *Vrms* | *Vpeak* | | |
| 10°C ± 1°C (50°F ± 2°F) | 209 | 296 | 30 s | 98% of 0-hour lamps |
| -30°C ± 1°C (-22°F ± 2°F) | 209 | 296 | 120 s | 90% of 100-hour lamps |

### 1.6.2 Lamp Warm-Up Requirements

Time to 90% of minimum lamp operating voltage……. 3 minutes

### 1.7 Reference Ballast Characteristics

Rated input voltage……. 220 V
Reference current…… 0.53 A
Impedance…… 350 Ω

## 2 Data for Ballast Design

### 2.1 Requirements for Lag Ballasts

### 2.1.2 For Lamps Requiring External Ignitor

| *Temperature* | *Minimum OCV* | | *Time* | *Probability of starting within the time specified* |
|---|---|---|---|---|
| | *Vrms* | *Vpeak* | | |
| 10°C ± 1°C (50°F ± 2°F) | 209 | 296 | 30 s | 98% of 0-hour lamps |
| -30°C ± 1°C (-22°F ± 2°F) | 209 | 296 | 120 s | 90% of 100-hour lamps |

See 2.3 for starting pulse requirements

### 2.2 Requirements for Peak Lead Ballasts - NA


Copyright 2004 © American National Standard Lighting Group – NEMA


Copyright National Electrical Manufacturers Association
Provided by IHS under license with NEMA
No reproduction or networking permitted without license from IHS
Not for Resale

## 2.3 Ignitor Requirements

| | *Option 1* | *Option 2* |
|---|---|---|
| Min pulse height, kV | 3.0 | 3.0 |
| Max pulse height, kV | 4.0 | 4.0 |
| Min pulse width, μs @ kV | 1.9 @ 2.7 | 1.0 @2.7 |
| Min pulse repetition rate per half cycle | 1 | 2 |
| Pulse positions for lag circuit ballasts | 60°-90°, 240º-270º | 64º-110°, 244º-290º |
| Pulse positions for lead circuit ballasts | Reserved for future consideration | |

## 2.4 Starting Current Requirements

| | Lag ballasts | Peak-lead ballasts |
|---|---|---|
| Minimum starting current, A rms | 0.53 | Reserved for future consideration |
| Maximum starting current, A rms | 0.80 | Reserved for future consideration |

## 2.5 Current Crest Factor

Maximum Current Crest Factor…… 1.8

## 2.6 Maximum Voltage across Lamp Terminals

A ballast shall not provide to the lamp terminals a voltage in excess of the following values:

| RMS | Peak | Peak Pulse |
|---|---|---|
| 305 | 548 | 4000 |

## 2.7 Lamp Operating Wattage

Design Center…… 39 watts

Range, 100-hour lamps…… 34 to 44 watts

## 3 Information for Luminaire Design ("CAUTION" of 7 (Part I) applies)

## 3.1 Voltage Rise, Luminaire Effect Limit

Lamp voltage change……. 5 volts, rms

## 3.4 End-of-Life Behavior

At the end of life of these lamps, rectification may occur. Ballasts or systems shall be designed either to be impervious to rectification or to shut themselves off (by means of a fuse or thermal switch, for example) in the event of rectification.


Copyright 2004 © American National Standard Lighting Group – NEMA


Copyright National Electrical Manufacturers Association
Provided by IHS under license with NEMA
No reproduction or networking permitted without license from IHS
Not for Resale

**50 Watt, M110 Single-Ended Metal Halide Lamp**

## 1 LAMP SPECIFICATIONS

### 1.1 Lamp Designations and Descriptions

| Designation | Bulb | Maximum Outline Drawing | Base |
|---|---|---|---|
| M110/E-ZL | B17 (E54) or E17 (E54) | Fig. 1 | E26/24 Medium Screw |
| M110/O-ZL | B17 (E54) or E17 (E54) | Fig. 2 | E26/24 Medium Screw |

### 1.2 Lamp Physical Characteristics

| | *M110/E-ZL or M110/O-ZL* |
|---|---|
| Bulb | B17 (B54) or E17 (E54) |
| Base | E26/24 |
| Nominal diameter [1] | 54 (2.13) |
| Maximum overall length (MOL) [1] | 138 (5.43) |
| Light center length (LCL) [1] | 86 ± 3 (3.39 ± 0.12) |
| Effective arc length [1] | 4 - 11 (0.16 –0.44) |
| Maximum electrode tip deviation [2] | 3 |
| Maximum permissible bulb temperature [3] | 400 (752) |
| Maximum permissible base temperature [3] | 190 (374) |

[1] Dimensions are in mm, with equivalent inches within parentheses
[2] Maximum electrode tip deviation is from base axis (apex at base eyelet), measured in degrees
[3] Temperatures are in ºC, with equivalent ºF within parentheses

### 1.3 Operating Requirements at 100 Hours

| | Min | Nom | Max |
|---|---|---|---|
| Voltage at lamp terminals (V, rms) | 75 | 85 | 95 |
| Lamp current (A, rms) | | 0.68 | |
| Lamp wattage (W) | | 50 | |


Copyright 2004 © American National Standard Lighting Group – NEMA


Copyright National Electrical Manufacturers Association
Provided by IHS under license with NEMA
No reproduction or networking permitted without license from IHS
Not for Resale

### 1.4 Lamp Reignition Voltage Spike (Vrs) During Warm-up

Maximum Reignition Voltage Spike ……. 150 volts, peak

Electrical Conditions:
Supply voltage ……. 300 volts
Ballast short circuit current …… 0.77 amperes
Impedance …… 390 ohms

### 1.5 Lamp Reignition Voltage (Vr) During Steady Operation

Maximum Reignition Voltage.....……. 250 volts

### 1.6 Lamp Starting Voltage and Warm-up Requirements

#### 1.6.1 Lamp Starting Voltage Requirements as a Function of Time and Temperature

Lamps shall start within the time specified at the ambient temperature indicated when the minimum open-circuit test voltages and the minimum starting pulse, Sec. 2.3, are applied.

| *Temperature* | *Minimum OCV* | | *Time* | *Probability of starting within the time specified* |
|---|---|---|---|---|
| | *Vrms* | *Vpeak* | | |
| 10°C ± 1°C (50°F ± 2°F) | 235 | 332 | 10 s | 98% of 0-hour lamps |
| -30°C ± 1°C (-22°F ± 2°F) | 235 | 332 | 120 s | 90% of 100-hour lamps |

#### 1.6.2 Lamp Warm-Up Requirements

Time to 95% of minimum lamp operating voltage……. 2 minutes

### 1.7 Reference Ballast Characteristics

Rated input voltage……. 220 V
Reference current…… 0.68 A
Impedance…… 272 Ω

## 2 DATA FOR BALLAST DESIGN

### 2.1 Requirements for Lag Ballasts

#### 2.1.2 For Lamps Requiring External Ignitor

| *Temperature* | *Minimum OCV* | | *Time* | *Probability of starting within the time specified* |
|---|---|---|---|---|
| | *Vrms* | *Vpeak* | | |
| 10°C ± 1°C (50°F ± 2°F) | 235 | 332 | 10 s | 98% of 0-hour lamps |
| -30°C ± 1°C (-22°F ± 2°F) | 235 | 332 | 120 s | 90% of 100-hour lamps |

See 2.3 for starting pulse requirements.

### 2.2 Requirements for Peak Lead ballasts - NA


Copyright 2004 © American National Standard Lighting Group – NEMA


Copyright National Electrical Manufacturers Association
Provided by IHS under license with NEMA
No reproduction or networking permitted without license from IHS
Not for Resale

### 2.3 Ignitor Requirements

| | *Option 1* | *Option 2* |
|---|---|---|
| Minimum pulse height, kV | 3.0 | 3.0 |
| Maximum pulse height, kV | 4.0 | 4.0 |
| Minimum pulse width, __ µs @ __ kV | 1.9 @ 2.7 | 1.0 @ 2.7 |
| Minimum pulse repetition rate per half cycle | 1 | 2 |
| Pulse position(s) for lag ballasts | 60° - 90°, 240° - 270° | 64º-110º, 244º-290º |

### 2.4 Starting Current Requirements

| | Lag ballasts | Peak-lead ballasts |
|---|---|---|
| Minimum starting current, A rms | 0.68 | Reserved for future consideration |
| Maximum starting current, A rms | 1.1 | Reserved for future consideration |

### 2.5 Current Crest Factor

Maximum Current Crest Factor…….. 1.8

### 2.6 Maximum Voltage across Lamp Terminals

A ballast shall not provide to the lamp terminals a voltage in excess of the following values:

| RMS | Peak | Peak Pulse |
|---|---|---|
| 305 | 548 | 4000 |

### 2.7 Lamp Operating Wattage

Design Center……. 50 watts

Range, 100-hour lamps…… 40 to 60 watts

## 3 Information for Luminaire Design (“CAUTION” of 7 (Part I) applies)

### 3.1 Voltage Rise, Luminaire Effect Limit

Lamp voltage change…… 5 volts, rms


Copyright 2004 © American National Standard Lighting Group – NEMA


Copyright National Electrical Manufacturers Association
Provided by IHS under license with NEMA
No reproduction or networking permitted without license from IHS
Not for Resale

**70 Watt M98 Single-Ended Metal Halide Lamp**

## 1 LAMP SPECIFICATIONS

### 1.1 Lamp Designations and Descriptions

| Designation | Bulb | Max. Outline Drawing | Base |
|---|---|---|---|
| M98/E-ZL | B17 (B54) or E17 (E54) | 1 | E26/24 Medium Screw |
| M98/O-ZL | B17 (B54) or E17 (E54) | 2 | E26/24 Medium Screw |
| M98/O-JM | PAR38 (PAR121) | 13 | E26/50x39 Medium Skirt |

### 1.2 Lamp Physical Characteristics

| | *M98/E-ZL or M98/O-ZL* | M98/O-JM |
|---|---|---|
| Bulb | B17 (B54) or E17 (E54) | PAR38 (PAR121) |
| Base | E26/24 | E26/50x39[1] |
| Nominal diameter [1] | 54 (2.13) | 121 (4.75) |
| Maximum overall length (MOL) [1] | 138 (5.43) | 138 (5.43) |
| Light center length (LCL) [1] | 86 ± 3 (3.39 ± 0.12) | NA |
| Effective arc length [1] | 5.5 – 11.5 (0.21 - 0.45) | NA |
| Maximum electrode tip deviation [2] | 3 | NA |
| Maximum permissible bulb temperature [3] | 400 (752) | 350 (662) |
| Maximum permissible base temperature [3] | 190 (374) | 190 (374) |

[1] Dimensions are in mm, with equivalent inches within parentheses
[2] Maximum electrode tip deviation is from base axis (apex at base eyelet), measured in degrees
[3] Temperatures are in ºC, with equivalent ºF within parentheses

### 1.3 Operating Requirements at 100 Hours

| | Min | Nom | Max |
|---|---|---|---|
| Voltage at lamp terminals (V, rms) | 75 | 85 | 100 |
| Lamp current (A, rms) | | 0.9 | |
| Lamp wattage (W) | | 70 | |

[1] The PAR 38 lamp will not fit into a medium exclusionary EX26 lampholder.


Copyright 2004 © American National Standard Lighting Group – NEMA


Copyright National Electrical Manufacturers Association
Provided by IHS under license with NEMA
No reproduction or networking permitted without license from IHS
Not for Resale

### 1.4 Lamp Reignition Voltage Spike (Vrs) During Warm-up

Maximum Reignition Voltage Spike ……. 150 volts, peak

Electrical Conditions:
Supply voltage ……. 300 volts
Ballast short circuit current …… 1.28 amperes
Impedance …… 234.0 ohms

### 1.5 Lamp Reignition Voltage (Vr) During Steady Operation

Maximum Reignition Voltage.....…… 240 volts

### 1.6 Lamp Starting Voltage and Warm-up Requirements

#### 1.6.1 Lamp Starting Voltage Requirements as a function of time and temperature

Lamps shall start within the time specified at the ambient temperature indicated when the minimum open-circuit test voltages and the minimum starting pulse, Sec. 2.3, are applied.

| *Temperature* | *Minimum OCV* | | *Time* | *Probability of starting within the time specified* |
|---|---|---|---|---|
| | *Vrms* | *Vpeak* | | |
| 10°C ± 1°C (50°F ± 2°F) | 235 | 332 | 10 s | 98% of 0-hour lamps |
| -30°C ± 1°C (-22°F ± 2°F) | 235 | 332 | 120 s | 90% of 100-hour lamps |

#### 1.6.2 Lamp Warm-Up Requirements

Time to 95% of minimum lamp operating voltage……. 2 minutes

### 1.7 Reference Ballast Characteristics

Rated input voltage……. 220 V
Reference current…… 0.9 A
Impedance…… 188 Ω

## 2 DATA FOR BALLAST DESIGN

### 2.1 Requirements for Lag Ballasts

#### 2.1.2 For lamps Requiring an External Ignitor

| *Temperature* | *Minimum OCV* | | *Time* | *Probability of starting within the time specified* |
|---|---|---|---|---|
| | *Vrms* | *Vpeak* | | |
| 10°C ± 1°C (50°F ± 2°F) | 235 | 332 | 10 s | 98% of 0-hour lamps |
| -30°C ± 1°C (-22°F ± 2°F) | 235 | 332 | 120 s | 90% of 100-hour lamps |

See 2.3 for starting pulse requirements.

### 2.2 Requirements for Peak Lead Ballasts - NA

### 2.3 Ignitor Requirements


Copyright 2004 © American National Standard Lighting Group – NEMA


Copyright National Electrical Manufacturers Association
Provided by IHS under license with NEMA
No reproduction or networking permitted without license from IHS
Not for Resale

| | *Option 1* | *Option 2* |
|---|---|---|
| Minimum pulse height, kV | 3.0 | 3.0 |
| Maximum pulse height, kV | 4.0 | 4.0 |
| Minimum pulse width, __ µs @ __ kV | 1.9 @ 2.7 | 1.0 @ 2.7 |
| Minimum pulse repetition rate per half cycle | 1 | 2 |
| Pulse position(s) for lag ballasts | 60° - 90°, 240° - 270° | 64º-110º, 244º-290º |

**2.4 Starting Current Requirements**

| | Lag ballasts | Peak-lead ballasts |
|---|---|---|
| Minimum starting current, A rms | 0.9 | Reserved for future consideration |
| Maximum starting current, A rms | 1.5 | Reserved for future consideration |

**2.5 Current Crest Factor**

Maximum Current Crest Factor…….. 1.8

**2.6 Maximum Voltage across Lamp Terminals**

A ballast shall not provide to the lamp terminals a voltage in excess of the following values:

| RMS | Peak | Peak Pulse |
|---|---|---|
| 305 | 548 | 4000 |

**2.7 Lamp Operating Wattage**

Design Center……. 70 watts

Range, 100-hour lamps…… 56 to 84 watts

**3 Information for Luminaire Design ("CAUTION" of 7 (Part I) applies)**

**3.1 Voltage Rise, Luminaire Effect Limit**

Lamp voltage change…… 5 volts, rms


Copyright 2004 © American National Standard Lighting Group – NEMA


Copyright National Electrical Manufacturers Association
Provided by IHS under license with NEMA
No reproduction or networking permitted without license from IHS
Not for Resale

**100 Watt M90 Single-Ended Metal Halide Lamp**

## 1 LAMP SPECIFICATIONS

### 1.1 Lamp Designations and Descriptions

| Designation | Bulb | Max. Outline Drawing | Base |
|---|---|---|---|
| M90/E-ZL | B17 (B54) or E17 (E54) | 1 | E26/24 Medium Screw |
| M90/O-ZL | B17 (B54) or E17 (E54) | 2 | E26/24 Medium Screw |
| M90/O-JM | PAR38 (PAR121) | 13 | E26/50x39 Medium Skirted Screw |

### 1.2 Lamp Physical Characteristics

| | *M90/E-ZL or M90/O-ZL* | *M90/O-JM* |
|---|---|---|
| Bulb | B17 (B54) or E17 (E54) | PAR38 (PAR121) |
| Base | E26/24 | E26/50x39[1] |
| Nominal diameter [1] | 54 (2.13) | 121 (4.75) |
| Maximum overall length (MOL) [1] | 138 (5.43) | 138 (5.43) |
| Light center length (LCL) [1] | 86 ± 3 (3.39 ± 0.12) | NA |
| Effective arc length [1] | 8.5 –16.5 (0.33 - 0.65) | NA |
| Maximum electrode tip deviation [2] | 3 | NA |
| Maximum permissible bulb temperature [3] | 400 (752) | 350 (662) |
| Maximum permissible base temperature [3] | 190 (374) | 190 (374) |

[1] Dimensions are in mm, with equivalent inches within parentheses
[2] Maximum electrode tip deviation is from base axis (apex at base eyelet), measured in degrees
[3] Temperatures are in ºC, with equivalent ºF within parentheses

### 1.3 Operating requirements at 100 hours

| | Min | Nom | Max |
|---|---|---|---|
| Voltage at lamp terminals (V, rms) | 90 | 100 | 110 |
| Lamp current (A, rms) | | 1.1 | |
| Lamp wattage (W) | | 100 | |

[1] The PAR 38 lamp will not fit into a medium exclusionary EX26 lampholder.


Copyright 2004 © American National Standard Lighting Group – NEMA


Copyright National Electrical Manufacturers Association
Provided by IHS under license with NEMA
No reproduction or networking permitted without license from IHS
Not for Resale

### 1.4 Lamp Reignition Voltage Spike (Vrs) During Warm-up

Maximum Reignition Voltage Spike ……. 150 volts, peak

Electrical Conditions:
Supply voltage ……. 300 volts
Ballast short circuit current ……. 1.5 amperes
Impedance ……. 200.0 ohms

### 1.5 Peak Voltage During Steady Operation

Maximum Reignition Voltage.....…… 250 volts

### 1.6 Lamp Starting Voltage and Warm-up Requirements

#### 1.6.1 Lamp Starting Voltage Requirements as a function of time and temperature

Lamps shall start within the time specified at the ambient temperature indicated when the minimum open-circuit test voltages and the minimum starting pulse, Sec. 2.3, are applied.

| *Temperature* | *Minimum OCV* | | *Time* | *Probability of starting within the time specified* |
|---|---|---|---|---|
| | *Vrms* | *Vpeak* | | |
| 10°C ± 1°C (50°F ± 2°F) | 235 | 332 | 10 s | 98% of 0-hour lamps |
| -30°C ± 1°C (-22°F ± 2°F) | 235 | 332 | 120 s | 90% of 100-hour lamps |

#### 1.6.2 Lamp Warm-Up Requirements

Time to 95% of minimum lamp operating voltage……. 2 minutes

### 1.7 Reference ballast Characteristics

Rated input voltage……. 220 V
Reference current…… 1.10 A
Impedance…… 157 Ω

## 2 DATA FOR BALLAST DESIGN

### 2.1 Requirements for Lag Ballasts

#### 2.1.2 For lamps Requiring an External Ignitor

| *Temperature* | *Minimum OCV* | | *Time* | *Probability of starting within the time specified* |
|---|---|---|---|---|
| | *Vrms* | *Vpeak* | | |
| 10°C ± 1°C (50°F ± 2°F) | 235 | 332 | 10 s | 98% of 0-hour lamps |
| -30°C ± 1°C (-22°F ± 2°F) | 235 | 332 | 120 s | 90% of 100-hour lamps |

See 2.3 for starting pulse requirements.

### 2.2 Requirements for Peak Lead Ballasts - NA


Copyright 2004 © American National Standard Lighting Group – NEMA


Copyright National Electrical Manufacturers Association
Provided by IHS under license with NEMA
No reproduction or networking permitted without license from IHS
Not for Resale

### 2.3 Ignitor Requirements

| | *Option 1* | *Option 2* |
|---|---|---|
| Minimum pulse height, kV | 3.0 | 3.0 |
| Maximum pulse height, kV | 4.0 | 4.0 |
| Minimum pulse width, __ µs @ __ kV | 1.9 @ 2.7 | 1.0 @ 2.7 |
| Minimum pulse repetition rate per half cycle | 1 | 2 |
| Pulse position(s) for lag ballasts | 60° - 90°, 240° - 270° | 64º-110º, 244º-290º |

### 2.4 Starting Current Requirements

| | Lag ballasts | Peak-lead ballasts |
|---|---|---|
| Minimum starting current, A rms | 1.1 | Reserved for future consideration |
| Maximum starting current, A rms | 1.5 | Reserved for future consideration |

### 2.5 Current Crest Factor

Maximum Current Crest Factor…….. 1.8

### 2.6 Maximum Voltage across Lamp Terminals

A ballast shall not provide to the lamp terminals a voltage in excess of the following values:

| RMS | Peak | Peak Pulse |
|---|---|---|
| 305 | 548 | 4000 |

### 2.7 Lamp Operating Wattage

Design Center……. 100 watts

Range, 100-hour lamps…… 80 to 120 watts

## 3 Information for Luminaire Design (“CAUTION” of 7 (Part I) applies)

### 3.1 Voltage Rise, Luminaire Effect Limit

Lamp voltage change…… 5 volts, rms


Copyright 2004 © American National Standard Lighting Group – NEMA


Copyright National Electrical Manufacturers Association
Provided by IHS under license with NEMA
No reproduction or networking permitted without license from IHS
Not for Resale

## 150 Watt, M102 Single-Ended Metal Halide Lamp

### 1 Lamp specifications

### 1.1 Lamp designations and descriptions

| Designation | Bulb | Max. Outline Drawing | Base |
|---|---|---|---|
| M102/E-ZL | B17 (B54) or E17 (E54) | 1 | E26/24 Medium Screw |
| M102/O-ZL | B17 (B54) or E17 (E54) | 2 | E26/24 Medium Screw |
| M102/O-JM | PAR38 | 13 | E26/50x39 Medium Skirt |

### 1.2 Lamp Physical Characteristics

| | *M102/E-ZL or M102/O-ZL* | *M102/O-JM* |
|---|---|---|
| Bulb | B17 (B54) or E17 (E54) | PAR38 (PAR121) |
| Base | E26/24 | E26/50x39[1] |
| Nominal diameter [1] | 54 (2.13) | 121 (4.75) |
| Maximum overall length (MOL) [1] | 138 (5.43) | 138 (5.43) |
| Light center length (LCL) [1] | 86 ± 3 (3.39 ± 0.12) | NA |
| Effective arc length [1] | 7.5 – 19.5 (0.29 - 0.77) | NA |
| Maximum electrode tip deviation [2] | 3 | NA |
| Maximum permissible bulb temperature [3] | 400 (752) | 350 (662) |
| Maximum permissible base temperature [3] | 190 (374) | 190 (374) |

[1] Dimensions are in mm, with equivalent inches within parentheses
[2] Maximum electrode tip deviation is from base axis (apex at base eyelet), measured in degrees
[3] Temperatures are in ºC, with equivalent ºF within parentheses

### 1.3 Operating Requirements at 100 Hours

| | Min | Nom | Max |
|---|---|---|---|
| Voltage at lamp terminals (V, rms) | 85 | 95 | 105 |
| Lamp current (A, rms) | | 1.8 | |
| Lamp wattage (W) | | 150 | |

[1] The PAR 38 lamp will not fit into a medium exclusionary EX26 lampholder.


Copyright 2004 © American National Standard Lighting Group – NEMA


Copyright National Electrical Manufacturers Association
Provided by IHS under license with NEMA
No reproduction or networking permitted without license from IHS
Not for Resale

### 1.4 Lamp Reignition Voltage Spike (Vrs) During Warm-up

Maximum Reignition Voltage Spike ……. 150 volts, peak

Electrical Conditions:
Supply voltage ……. 300 volts
Ballast short circuit current …… 2.5 amperes
Impedance …… 120.0 ohms

### 1.5 Peak Voltage During Steady Operation

Maximum Reignition Voltage.....…….. 250 volts

### 1.6 Lamp Starting Voltage and Warm-up Requirements

#### 1.6.1 Lamp Starting Voltage Requirements as a function of time and temperature

Lamps shall start within the time specified at the ambient temperature indicated when the minimum open-circuit test voltages and the minimum starting pulse, Sec. 2.3, are applied.

| *Temperature* | *Minimum OCV* | | *Time* | *Probability of starting within the time specified* |
|---|---|---|---|---|
| | *Vrms* | *Vpeak* | | |
| 10°C ± 1°C (50°F ± 2°F) | 235 | 332 | 10 s | 98% of 0-hour lamps |
| -30°C ± 1°C (-22°F ± 2°F) | 235 | 332 | 120 s | 90% of 100-hour lamps |

#### 1.6.2 Lamp Warm-Up Characteristics

Time to 95% of minimum lamp operating voltage…… 2 minutes

### 1.7 Reference Ballast Requirements

Rated input voltage……..……. 220 V
Reference current…….. 1.80 A
Impedance…….. 97 Ω

## 2 DATA FOR BALLAST DESIGN

### 2.1 Requirements for Lag Ballasts

#### 2.1.2 For Lamps Requiring External Ignitor

| *Temperature* | *Minimum OCV* | | *Time* | *Probability of starting within the time specified* |
|---|---|---|---|---|
| | *Vrms* | *Vpeak* | | |
| 10°C ± 1°C (50°F ± 2°F) | 235 | 332 | 10 s | 98% of 0-hour lamps |
| -30°C ± 1°C (-22°F ± 2°F) | 235 | 332 | 120 s | 90% of 100-hour lamps |

See 2.3 for starting pulse requirements.

### 2.2 Requirements for Peak Lead ballasts - NA


Copyright 2004 © American National Standard Lighting Group – NEMA


Copyright National Electrical Manufacturers Association
Provided by IHS under license with NEMA
No reproduction or networking permitted without license from IHS
Not for Resale

## 2.3 Ignitor Requirements

| | *Option 1* | *Option 2* |
|---|---|---|
| Minimum pulse height, kV | 3.0 | 3.0 |
| Maximum pulse height, kV | 4.0 | 4.0 |
| Minimum pulse width, __ µs @ __ kV | 1.9 @ 2.7 | 1.0 @ 2.7 |
| Minimum pulse repetition rate per half cycle | 1 | 2 |
| Pulse position(s) for lag ballasts | 60° - 90°, 240° - 270° | 64º-110º, 244º-290º |

## 2.4 Starting Current Requirements

| | Lag ballasts | Peak-lead ballasts |
|---|---|---|
| Minimum starting current, A rms | 1.8 | Reserved for future consideration |
| Maximum starting current, A rms | 3.0 | Reserved for future consideration |

## 2.5 Current Crest Factor

Maximum Current Crest Factor…….. 1.8

## 2.6 Maximum Voltage across Lamp Terminals

A ballast shall not provide to the lamp terminals a voltage in excess of the following values:

| RMS | Peak | Peak Pulse |
|---|---|---|
| 305 | 548 | 4000 |

## 2.7 Lamp Operating Wattage

Design Center…….. 150 watts

Range, 100-hour lamps…… 120 to 180 watts

## 3 Information for Luminaire Design (“CAUTION” of 7 (Part I) applies)

## 3.1 Voltage Rise, Luminaire Effect Limit

Lamp voltage change…… 5 volts, rms


Copyright 2004 © American National Standard Lighting Group – NEMA


Copyright National Electrical Manufacturers Association
Provided by IHS under license with NEMA
No reproduction or networking permitted without license from IHS
Not for Resale

**175 Watt M57 Metal Halide Lamp**

## 1 LAMP SPECIFICATIONS

### 1.1 Lamp Designations and Descriptions

| Designation | Bulb | Maximum Outline Drawing | Base |
|---|---|---|---|
| M57/E-ZL | ED17 (ED54) or B17 (B54) | Fig. 1 | E26/24 Medium Screw |
| M57/O-ZL | ED17 (ED54) or B17 (B54) | Fig. 2 | E26/24 Medium Screw |
| M57/E-JM | PAR38 (PAR121) | Fig. 13 | E26/50x39 Medium Skirt |
| M57/O-JM | PAR38 (PAR121) | Fig. 13 | E26/50x39 Medium Skirt |
| M57/E-KA | BT28 (BT90) or ED28 (ED75) | Fig. 8 | E39 Mogul screw |
| M57/O-SZ | BT28 (BT90) or ED28 (ED75) | Fig. 8 | EX39 Mogul Exclusionary |
| M57/E-TA | BT28 (BT90) or ED28 (ED75) | Fig. 8 | EP39 Mogul Position Oriented |

### 1.2 Lamp Physical Characteristics

| | *M57/E-ZL or M57/O-ZL* | *M57/O-JM or M57/E-JM* | *M57/E-KA M57/E-TA* | *M57/O-SZ* |
|---|---|---|---|---|
| Bulb | B17 (B54) or E17 (E54) | PAR38 (PAR121) | BT28 (BT75) or ED28 (ED75) | BT28 (BT75) or ED28 (ED75) |
| Base | E26/24 | E26/50x39[1] | E39/EP39 | EX39 |
| Nominal diameter [1] | 54 (2.13) | 121 (4.75) | 90.0 (3.50) | 90.0 (3.50) |
| Maximum overall length (MOL) [1] | 138 (5.43) | 138 (5.43) | 211 (8.31) | 211 (8.31) |
| Light center length (LCL) [1] | 86 ± 3 (3.39 ± 0.12) | NA | 127 ± 5 (5 ± 0.2) | 127 ± 5 (5 ± 0.2) |
| Effective arc length [1] | 21 - 29 (0.82 – 1.1) | NA | 21 - 29 (0.82 – 1.1) | 21 - 29 (0.82 – 1.1) |
| Maximum electrode tip deviation [2] | 3 | NA | 3 | 3 |
| Maximum permissible bulb temperature [3] | 400 (752) | 350 (662) | 400 (752) | 400 (752) |
| Maximum permissible base temperature [3] | 210 (410) | 190 (374) | 210 (410) | 210 (410) |

[1] Dimensions are in mm, with equivalent inches within parentheses
[2] Maximum electrode tip deviation is from base axis (apex at base eyelet), measured in degrees
[3] Temperatures are in ºC, with equivalent ºF within parentheses

### 1.3 Operating Requirements at 100 hours

| | Min | Nom | Max |
|---|---|---|---|
| Voltage at lamp terminals (V, rms) | 117 | 132 | 147 |
| Lamp current (A, rms) | | 1.5 | |
| Lamp wattage (W) | | 175 | |

[1] The PAR 38 lamp will not fit into a medium exclusionary EX26 lampholder.


Copyright 2004 © American National Standard Lighting Group – NEMA


Copyright National Electrical Manufacturers Association
Provided by IHS under license with NEMA
No reproduction or networking permitted without license from IHS
Not for Resale

### 1.4 Lamp Reignition Voltage Spike (Vrs) During Warm-up

Maximum Reignition Voltage Spike ..... 150 volts, peak

Electrical Conditions:
Supply voltage ..... 340 volts
Ballast short circuit current ..... 1.9 amperes
Impedance ..... 179.0 ohms

### 1.5 Lamp Reignition Voltage (Vr) During Steady Operation

Maximum Reignition Voltage ..... 250 volts

### 1.6 Lamp Starting Voltage and Warm up Requirements

#### 1.6.1 Lamp Starting Voltage Requirements as a function of time and temperature

Lamps shall start within the time specified at the ambient temperature indicated under the following test conditions:

| *Temperature* | *Minimum OCV* | | *Time* | *Probability of starting within the time specified* |
|---|---|---|---|---|
| | *Vrms* | *Vpeak* | | |
| 10°C ± 1°C (50°F ± 2°F) | 350 | 495 | 120 s | 98% of 0-hour lamps |
| -30°C ± 1°C (-22°F ± 2°F) | 382 | 540 | 120 s | 90% of 100-hour lamps |

#### 1.6.2 Lamp Warm-Up Requirements

Time to 95% of minimum lamp operating voltage..... 10 minutes

### 1.7 Reference Ballast Characteristics

Rated input voltage..... 220 V
Reference current..... 1.5 A
Impedance..... 102 Ω

## 2 DATA FOR BALLAST DESIGN

### 2.1 Requirements for Lag Ballast

#### 2.1.1 For Lamp Not Requiring an External Ignitor

| *Temperature* | *Minimum OCV* | | *Time* | *Probability of starting within the time specified* |
|---|---|---|---|---|
| | *Vrms* | *Vpeak* | | |
| 10°C ± 1°C (50°F ± 2°F) | 350 | 495 | 120 s | 98% of 0-hour lamps |
| -30°C ± 1°C (-22°F ± 2°F) | 382 | 540 | 120 s | 90% of 100-hour lamps |

### 2. 2 Requirements for Peak Lead Ballasts

#### 2.2.1 For Lamps not Requiring an External Ignitor

| *Temperature* | Minimum OCV | | Time | *Probability of starting within the time specified* |
|---|---|---|---|---|
| | *Volts,rms* | *Crest factor* | | |
| 10°C ± 1°C (50°F ± 2°F) | 250* | 2.0 | 120 s | 98% for 0-h lamps |
| -30°C ± 1°C (-22°F ± 2°F) | 280** | 2.0 | 120 s | 90% for 100-h lamps |

*The rms open-circuit voltage may be reduced by 10 volts for each 0.1 increase of the voltage crest factor, down to 230 volts rms, as the lowest value.


Copyright 2004 © American National Standard Lighting Group – NEMA


Copyright National Electrical Manufacturers Association
Provided by IHS under license with NEMA
No reproduction or networking permitted without license from IHS
Not for Resale

**The rms open-circuit voltage may be reduced by 10 volts for each 0.1 increase in the voltage crest factor, down to 260 volts rms, as the lowest value.

### 2.2.3 Current Waveshape Characteristic Requirements for Peak Lead Ballasts

Current slope (di/dt), minimum…… 0.65 amperes per millisecond
Off time (OT), maximum…… 2.75 milliseconds
Peak Current, maximum…… 3.8 amperes
Overshoot (OS), maximum…… 45 milliamperes

### 2.2.4 Minimum Sustaining Voltage (Vss) for Peak Lead Ballasts

| Minimum Sustaining Voltage (Vss) | | | | | | | |
|---|---|---|---|---|---|---|---|
| | Current Slope (di/dt), amperes per millisecond, at I=0 | | | | | | |
| Off-time (milliseconds) | 0.65 | 0.7 | 0.9 | 1.1 | 1.3 | 1.5 | - |
| 2.75 | 283 | 277 | 254 | 231 | 208 | 185 | - |
| 2.50 | 276 | 270 | 247 | 220 | 201 | 178 | - |
| 2.25 | 268 | 262 | 240 | 217 | 194 | 171 | - |
| 2.00 | 261 | 256 | 233 | 210 | 187 | 164 | - |
| 1.75 | 254 | 248 | 225 | 202 | 179 | 156 | - |
| 1.50 | 247 | 241 | 218 | 195 | 172 | 149 | - |

The values given in this table are derived from the equation: $Vss = C_1 + C_2 (OT) – C_3 (di/dt)$ where:

Vss = minimum sustaining voltage in volts, (rms)
OT = Off-time in milliseconds
di/dt = Current slope at I=0 in amperes per millisecond
C1 = 278 C2 = 29 C3 = 115

### 2.3 Ignitor Requirements - NA

### 2.4 Starting Current Requirements

| | Lag ballasts | Peak-lead ballasts |
|---|---|---|
| Minimum starting current, A rms | 1.5 | 1.5 |
| Maximum starting current, A rms | 2.5 | 2.5 |

### 2.5 Current Crest Factor

Maximum Current Crest Factor …….. 1.8

### 2.6 Maximum Voltage across Lamp Terminals

| RMS | Peak | Peak Pulse |
|---|---|---|
| 528 | 1100 | NA |

### 2.7 Lamp Operating Wattage

Design Center……. 175 watts

Range, 100-hour lamps…… 140 to 210 watts

## 3 INFORMATION FOR LUMINAIRE DESIGN ("CAUTION" of 7 (Part I) applies)

### 3.1 Voltage Rise, Luminaire Effect Limit

Lamp voltage change……. 5 volts, rms


Copyright 2004 © American National Standard Lighting Group – NEMA


Copyright National Electrical Manufacturers Association
Provided by IHS under license with NEMA
No reproduction or networking permitted without license from IHS
Not for Resale

**175 Watt M152 Pulse-Start Metal-Halide Lamp**

## 1 LAMP SPECIFICATIONS

### 1.1 Lamp Designations and Descriptions

| Designation | Bulb | Maximum Outline Drawing | Base |
|---|---|---|---|
| M152/E-KA | BT28 (BT90) or ED28 (ED75) | Fig. 8 | E39 Mogul screw |
| M152/E-ZL | B17 (B54) or ED17 (ED54) | Fig. 1 | E26/24 Medium Screw |

### 1.2 Lamp Physical Characteristics

| | *M152/E-KA* | *M152/E-ZL* |
|---|---|---|
| Bulb | BT28 (BT75) or ED28 (ED75) | B17 (B54) or E17 (E54) |
| Base | E39 | E26/24 |
| Nominal diameter [1] | 90.0 (3.50) | 54 (2.13) |
| Maximum overall length (MOL) [1] | 211 (8.31) | 138 (5.43) |
| Light center length (LCL) [1] | 127 ± 5 (5 ± 0.2) | 86 ± 3 (3.39 ± 0.12) |
| Effective arc length [1] | 20 - 30 (0.79 – 1.1) | 20 - 30 (0.79 – 1.1) |
| Maximum electrode tip deviation [2] | 3 | 3 |
| Maximum permissible bulb temperature [3] | 400 (752) | 400 (752) |
| Maximum permissible base temperature [3] | 210 (410) | 210 (410) |

[1] Dimensions are in mm, with equivalent inches within parentheses
[2] Maximum electrode tip deviation is from base axis (apex at base eyelet), measured in degrees
[3] Temperatures are in ºC, with equivalent ºF within parentheses

### 1.3 Operating Requirements at 100 hours

| | Min | Nom | Max |
|---|---|---|---|
| Voltage at lamp terminals (V, rms) | 117 | 132 | 147 |
| Lamp current (A, rms) | | 1.5 | |
| Lamp wattage (W) | | 175 | |


Copyright 2004 © American National Standard Lighting Group – NEMA


Copyright National Electrical Manufacturers Association
Provided by IHS under license with NEMA
No reproduction or networking permitted without license from IHS
Not for Resale

### 1.4 Lamp Reignition Voltage Spike (Vrs) During Warm-up

Maximum Reignition Voltage Spike ……. 150 volts, peak

Electrical Conditions:
Supply voltage …… 340 volts
Ballast short circuit current …… 1.9 amperes
Impedance …… 179.0 ohms

### 1.5 Lamp Reignition Voltage (Vr) During Steady Operation

Maximum Reignition Voltage …….. 270 volts

### 1.6 Lamp Starting Voltage and Warm up Requirements

#### 1.6.1 Lamp Starting Voltage Requirements as a function of time and temperature

Lamps shall start within the time specified at the ambient temperature indicated when the minimum open-circuit test voltages and the minimum starting pulse, Sec. 2.3, are applied.

| *Temperature* | *Minimum OCV* | | *Time* | *Probability of starting within the time specified* |
|---|---|---|---|---|
| | *Vrms* | *Vpeak* | | |
| 10°C ± 1°C (50°F ± 2°F) | 254 | 359 | 120 s | 98% of 0-hour lamps |
| -30°C ± 1°C (-22°F ± 2°F) | 254 | 359 | 120 s | 90% of 100-hour lamps |

#### 1.6.2 Lamp Warm-Up Requirements

Time to 95% of minimum lamp operating voltage……. 10 minutes

### 1.7 Reference Ballast Characteristics

Rated input voltage……. 220 V
Reference current…… 1.5 A
Impedance…… 102 Ω

## 2 DATA FOR BALLAST DESIGN

### 2.1 Requirements for Lag Ballast

#### 2.1.2 For Lamps Requiring an External Ignitor

| *Temperature* | *Minimum OCV*[1] | | *Time* | *Probability of starting within the time specified* |
|---|---|---|---|---|
| | *Vrms* | *Vpeak* | | |
| 10°C ± 1°C (50°F ± 2°F) | 254 | 345[#] | 120 s | 98% of 0-hour lamps |
| -30°C ± 1°C (-22°F ± 2°F) | 254 | 345 | 120 s | 90% of 100-hour lamps |

[1] OCV (open circuit voltage) is measured with the ignitor removed from the circuit at minimum line conditions.

### 2. 2 Requirements for Peak Lead Ballasts

[#] 345V is lower than the product of 1.414 and Vrms to accommodate magnetic regulated ballasts.


Copyright 2004 © American National Standard Lighting Group – NEMA


Copyright National Electrical Manufacturers Association
Provided by IHS under license with NEMA
No reproduction or networking permitted without license from IHS
Not for Resale

### 2.2.2 For Lamps Requiring an External Ignitor

| | Minimum OCV[1] | | | |
|---|---|---|---|---|
| *Temperature* | *Vrms* | *Peak Volts* | Time | *Probability of starting within the time specified* |
| 10°C ± 1°C (50°F ± 2°F) | 254 | 483 | 120 s | 98% for 0-h lamps |
| -30°C ± 1°C (-22°F ± 2°F) | 254 | 483 | 120 s | 90% for 100-h lamps |

[1] OCV (open circuit voltage) is measured with the ignitor removed from the circuit at minimum line conditions.

### 2.2.3 Current Waveshape Characteristic Requirements for Peak Lead Ballasts

Off time (OT), maximum…… 2.3 milliseconds
Peak Current, maximum…… 3.8 amperes
Overshoot (OS), maximum…… 45 milliamperes

### 2.2.4 Minimum Sustaining Voltage (Vss) for Peak Lead Ballasts

Sustaining Voltage (Vss) Minimum: 270 V

The ballast shall meet this value at minimum rated input voltage for reliable lamp operation during warm-up and through life.

### 2.3 Ignitor Requirements

(a) Minimum pulse height, kV..... 3.0
(b) Maximum pulse height, kV..... 4.0
(c) Minimum pulse width, µs @ kV..... 1.3 @ 2.7
(d) Minimum pulse repetition rate per half cycle ..... 1
(e) Pulse position(s) for lag circuit ballasts ..... 64°-110°, 244°-290°
(f ) Pulse position(s) for lead circuit ballasts ..... During the period when the OCV exceeds 90% peak.

### 2.4 Starting Current Requirements

| | Lag ballasts | Peak-lead ballasts |
|---|---|---|
| Minimum starting current, A rms | 1.5 | 1.5 |
| Maximum starting current, A rms | 2.3 | 2.3 |

### 2.5 Current Crest Factor

Maximum Current Crest Factor ……1.8

### 2.6 Maximum Voltage across Lamp Terminals

| RMS | Peak | Peak Pulse |
|---|---|---|
| 528 | 1100 | 4000 |

### 2.7 Lamp Operating Wattage

Design Center…….. 175 watts

Range, 100-hour lamps…… 140 to 210 watts

## 3 INFORMATION FOR LUMINAIRE DESIGN ("CAUTION" of 7 (Part I) applies)

### 3.1 Voltage Rise, Luminaire Effect Limit

Lamp voltage change…….. 5 volts, rms


Copyright 2004 © American National Standard Lighting Group – NEMA


Copyright National Electrical Manufacturers Association
Provided by IHS under license with NEMA
No reproduction or networking permitted without license from IHS
Not for Resale

**250 Watt M58 Metal Halide Lamp**

## 1 LAMP SPECIFICATIONS

### 1.1 Lamp Designations and Descriptions

| Designation | Bulb | Max. Outline Drawing | Base |
|---|---|---|---|
| M58/E-AC | T15 (T48) | Fig. 5 | E39 Mogul screw |
| M58/E-EJ | E18 (E57) | Fig. 6 | E39 Mogul screw |
| M58/E-KA | BT28 (BT90) or ED28 (ED75) | Fig. 8 | E39 Mogul screw |
| M58/O-SZ | BT28 (BT90) or ED28 (ED75) | Fig. 8 | EX39 Mogul Exclusionary |
| M58/E-TA | BT28 (BT90) or ED28 (ED75) | Fig. 8 | EP39 Mogul Position Oriented |

### 1.2 Lamp Physical Characteristics

| | *M58/E-AC* | *M58/E-EJ* | *M58/E-KA*<br>*M58/E-TA* | *M58/O-SZ* |
|---|---|---|---|---|
| Bulb | T15 (T48) | E18 (E57) | BT28 (BT75)<br>or ED28 (ED75) | BT28 (BT75)<br>or ED28 (ED75) |
| Base | E39 | E39 | E39/EP39 | EX39 |
| Nominal diameter [1] | 48 (1.875) | 57 (2.25) | 90.0 (3.50) | 90.0 (3.50) |
| Maximum overall length (MOL) [1] | 248 (9.76) | 248 (9.76) | 211 (8.31) | 211 (8.31) |
| Light center length (LCL) [1] | 146 ± 3<br>(5.75 ± 0.12) | 146 ± 3<br>(5.75 ± 0.12) | 127 ± 5<br>(5 ± 0.2) | 127 ± 5<br>(5 ± 0.2) |
| Effective arc length [1] | 29.5 – 37.5<br>(1.2 - 1.5) | 29.5 – 37.5<br>(1.2 - 1.5) | 29.5 – 37.5<br>(1.2 - 1.5) | 29.5 – 37.5<br>(1.2 - 1.5) |
| Maximum electrode tip deviation [2] | 3 | 3 | 3 | 3 |
| Maximum permissible bulb temperature [3] | 400 (752) | 400 (752) | 400 (752) | 400 (752) |
| Maximum permissible base temperature [3] | 210 (410) | 210 (410) | 210 (410) | 210 (410) |

[1] Dimensions are in mm, with equivalent inches within parentheses
[2] Maximum electrode tip deviation is from base axis (apex at base eyelet), measured in degrees
[3] Temperatures are in ºC, with equivalent ºF within parentheses

### 1.3 Operating Requirements at 100 Hours

| | Min | Nom | Max |
|---|---|---|---|
| Voltage at lamp terminals (V, rms) | 118 | 133 | 148 |
| Lamp current (A, rms) | | 2.1 | |
| Lamp wattage (W) | | 250 | |


Copyright 2004 © American National Standard Lighting Group – NEMA


Copyright National Electrical Manufacturers Association
Provided by IHS under license with NEMA
No reproduction or networking permitted without license from IHS
Not for Resale

### 1.4 Lamp Reignition Voltage Spike (Vrs) During Warm-up

Maximum Reignition Voltage Spike …….. 150 volts, peak

Electrical Conditions:
Supply voltage …… 340 volts
Ballast short circuit current …… 2.5 amperes
Impedance …… 136.0 ohms

### 1.5 Lamp Reignition Voltage (Vr) During Steady Operation

Maximum Reignition Voltage.....…….... 250 volts

### 1.6 Lamp Starting Voltage Requirements

#### 1.6.1 Lamp Starting Voltage Requirements as a Function of Time and Temperature

Lamps shall start within the time specified at the ambient temperature indicated under the following test conditions:

| *Temperature* | *Minimum OCV* | | *Time* | *Probability of starting within the time specified* |
|---|---|---|---|---|
| | *Vrms* | *Vpeak* | | |
| 10°C ± 1°C (50°F ± 2°F) | 350 | 495 | 120 s | 98% of 0-hour lamps |
| -30°C ± 1°C (-22°F ± 2°F) | 382 | 540 | 120 s | 90% of 100-hour lamps |

#### 1.6.2 Lamp Warm-Up Requirements

Time to 95% of minimum lamp operating voltage……. 10 minutes

### 1.7 Reference Ballast Characteristics

Rated input voltage……. 220 V
Reference current…… 2.1 A
Impedance…… 74 Ω

## 2 DATA FOR BALLAST DESIGN

### 2.1 Requirements for Lag Ballast

#### 2.1.1 For Lamps Not Requiring an External Ignitor

| *Temperature* | *Minimum OCV* | | *Time* | *Probability of starting within the time specified* |
|---|---|---|---|---|
| | *Vrms* | *Vpeak* | | |
| 10°C ± 1°C (50°F ± 2°F) | 350 | 495 | 120 s | 98% of 0-hour lamps |
| -30°C ± 1°C (-22°F ± 2°F) | 382 | 540 | 120 s | 90% of 100-hour lamps |

### 2.2 Requirements for Peak Lead Ballasts

#### 2.2.1 For Lamps not Requiring an External Ignitor

| *Temperature* | Minimum OCV | | Time | *Probability of starting within the time specified* |
|---|---|---|---|---|
| | *Volts,rms* | *Crest factor* | | |
| 10°C ± 1°C (50°F ± 2°F) | 270* | 1.8 | 120 s | 98% for 0-h lamps |
| -30°C ± 1°C (-22°F ± 2°F) | 300** | 1.8 | 120 s | 90% for 100-h lamps |

*The rms open-circuit voltage may be reduced by 10 volts for each 0.1 increase of the voltage crest factor, down to 230 volts rms, as the lowest value.


Copyright 2004 © American National Standard Lighting Group – NEMA


Copyright National Electrical Manufacturers Association
Provided by IHS under license with NEMA
No reproduction or networking permitted without license from IHS
Not for Resale

** The rms open-circuit voltage may be reduced by 10 volts for each 0.1 increase in the voltage crest factor, down to 260 volts rms, as the lowest value.

### 2.2.3 Current Waveshape Characteristic Requirements for Peak Lead Ballasts

Current slope (di/dt), minimum…… 0.8 amperes per millisecond
Off time (OT), maximum…….. 2.75 milliseconds
Peak Current, maximum…….. 5.0 amperes
Overshoot (OS), maximum…….. 75 milliamperes

### 2.2.4 Minimum Sustaining Voltage (Vss) for Peak Lead Ballasts

| Minimum Sustaining Voltage (Vss) | | | | | | | |
|---|---|---|---|---|---|---|---|
| | Current Slope (di/dt), amperes per millisecond, at I=0 | | | | | | |
| Off-time (milliseconds) | 0.8 | 1.0 | 1.2 | 1.4 | 1.6 | 1.8 | - |
| 2.75 | 266 | 243 | 220 | 197 | 174 | 151 | - |
| 2.50 | 259 | 236 | 213 | 190 | 167 | 144 | - |
| 2.25 | 251 | 228 | 205 | 182 | 159 | 136 | - |
| 2.00 | 244 | 221 | 198 | 175 | 152 | 129 | - |
| 1.75 | 237 | 214 | 191 | 168 | 145 | 122 | - |
| 1.50 | 230 | 207 | 184 | 161 | 138 | 115 | - |

The values given in this table are derived from the equation: $Vss = C_1 + C_2 (OT) – C_3 (di/dt)$ where:

Vss = minimum sustaining voltage in volts, (rms)
OT = Off-time in milliseconds
di/dt = Current slope at I=0 in amperes per millisecond
C1 = 278 C2 = 29 C3 = 115

### 2.3 Ignitor Requirements - NA

### 2.4 Starting Current Requirements

| | Lag ballasts | Peak-lead ballasts |
|---|---|---|
| Minimum starting current, A rms | 2.1 | 2.1 |
| Maximum starting current, A rms | 3.5 | 3.5 |

### 2.5 Current Crest Factor

Maximum Current Crest Factor …….. 1.8

### 2.6 Maximum Voltage across Lamp Terminals

| RMS | Peak | Peak Pulse |
|---|---|---|
| 528 | 1100 | NA |

### 2.7 Lamp Operating Wattage

Design Center……. 250 watts

Range, 100-hour lamps…… 200 to 300 watts

## 3 INFORMATION FOR LUMINAIRE DESIGN (“CAUTION” of 7 (Part I) applies)

### 3.1 Voltage Rise, Luminaire Effect Limit

Lamp voltage change……. 5 volts, rms


Copyright 2004 © American National Standard Lighting Group – NEMA


Copyright National Electrical Manufacturers Association
Provided by IHS under license with NEMA
No reproduction or networking permitted without license from IHS
Not for Resale

**250 Watt M153 Pulse-Start Metal-Halide Lamp**

## 1 LAMP SPECIFICATIONS

### 1.1 Lamp Designations and Descriptions

| Designation | Bulb | Maximum Outline Drawing | Base |
|---|---|---|---|
| M153/E-KA | BT28 (BT90) or ED28 (ED75) | Fig. 8 | E39 Mogul Screw |
| M153/O-QC | BT28 (BT90) or ED28 (ED75) | Fig. 8 | EX39 Mogul Exclusionary |

### 1.2 Lamp Physical Characteristics

| | *M153/E-KA*<br>*M153/O-QC* |
|---|---|
| Bulb | BT28 (BT75)<br>or ED28 (ED75) |
| Base | E39 for /E<br>EX39 for /O |
| Nominal diameter [1] | 90.0 (3.50) |
| Maximum overall length (MOL) [1] | 211 (8.31) |
| Light center length (LCL) [1] | 127 ± 5<br>(5 ± 0.2) |
| Effective arc length [1] | 28.5 – 38.5<br>(1.29 – 1.33) |
| Maximum electrode tip deviation [2] | 3 |
| Maximum permissible bulb temperature [3] | 400 (752) |
| Maximum permissible base temperature [3] | 210 (410) |

[1] Dimensions are in mm, with equivalent inches within parentheses
[2] Maximum electrode tip deviation is from base axis (apex at base eyelet), measured in degrees
[3] Temperatures are in ºC, with equivalent ºF within parentheses

### 1.3 Operating Requirements at 100 hours

| | Min | Nom | Max |
|---|---|---|---|
| Voltage at lamp terminals (V, rms) | 118 | 133 | 148 |
| Lamp current (A, rms) | | 2.1 | |
| Lamp wattage (W) | | 250 | |


Copyright 2004 © American National Standard Lighting Group – NEMA


Copyright National Electrical Manufacturers Association
Provided by IHS under license with NEMA
No reproduction or networking permitted without license from IHS
Not for Resale

### 1.4 Lamp Reignition Voltage Spike (Vrs) During Warm-up

Maximum Reignition Voltage Spike ……. 150 volts, peak

Electrical Conditions:
Supply voltage ……. 340 volts
Ballast short circuit current …… 2.5 amperes
Impedance …… 136.0 ohms

### 1.5 Lamp Reignition Voltage (Vr) During Steady Operation

Maximum Reignition Voltage …….. 270 volts

### 1.6 Lamp Starting Voltage and Warm up Requirements

#### 1.6.1 Lamp Starting Voltage Requirements as a function of time and temperature

Lamps shall start within the time specified at the ambient temperature indicated when the minimum open-circuit test voltages and the minimum starting pulse, Sec. 2.3, are applied.

| *Temperature* | *Minimum OCV* | | *Time* | *Probability of starting within the time specified* |
|---|---|---|---|---|
| | *Vrms* | *Vpeak* | | |
| 10°C ± 1°C (50°F ± 2°F) | 254 | 359 | 120 s | 98% of 0-hour lamps |
| -30°C ± 1°C (-22°F ± 2°F) | 254 | 359 | 120 s | 90% of 100-hour lamps |

#### 1.6.2 Lamp Warm-Up Requirements

Time to 95% of minimum lamp operating voltage……. 10 minutes

### 1.7 Reference Ballast Characteristics

Rated input voltage……. 220 V
Reference current…… 2.1 A
Impedance…… 74 Ω

## 2 DATA FOR BALLAST DESIGN

### 2.1 Requirements for Lag Ballast

#### 2.1.2 For Lamps Requiring an External Ignitor

| *Temperature* | *Minimum OCV*[1] | | *Time* | *Probability of starting within the time specified* |
|---|---|---|---|---|
| | *Vrms* | *Vpeak* | | |
| 10°C ± 1°C (50°F ± 2°F) | 254 | 345[#] | 120 s | 98% of 0-hour lamps |
| -30°C ± 1°C (-22°F ± 2°F) | 254 | 345 | 120 s | 90% of 100-hour lamps |

[1] OCV (open circuit voltage) is measured with the ignitor removed from the circuit at minimum line conditions.

### 2. 2 Requirements for Peak Lead Ballasts

[#] 345V is lower than the product of 1.414 and Vrms to accommodate magnetic regulated ballasts.


Copyright 2004 © American National Standard Lighting Group – NEMA


Copyright National Electrical Manufacturers Association
Provided by IHS under license with NEMA
No reproduction or networking permitted without license from IHS
Not for Resale

### 2.2.2 For Lamps Requiring an External Ignitor

| *Temperature* | Minimum OCV[1] *Vrms* | *Peak Volts* | Time | *Probability of starting within the time specified* |
|---|---|---|---|---|
| 10°C ± 1°C (50°F ± 2°F) | 254 | 483 | 120 s | 98% for 0-h lamps |
| -30°C ± 1°C (-22°F ± 2°F) | 254 | 483 | 120 s | 90% for 100-h lamps |

[1] OCV (open circuit voltage) is measured with the ignitor removed from the circuit at minimum line conditions.

### 2.2.3 Current Waveshape Characteristic Requirements for Peak Lead Ballasts

Off time (OT), maximum…… 2.3 milliseconds
Peak Current, maximum…… 5.0 amperes
Overshoot (OS), maximum…… 75 milliamperes

### 2.2.4 Minimum Sustaining Voltage (Vss) for Peak Lead Ballasts

Sustaining Voltage (Vss) Minimum: 270 V

The ballast shall meet this value at minimum rated input voltage for reliable lamp operation during warm-up and through life.

### 2.3 Ignitor Requirements

(a) Minimum pulse height, kV..... 3.0
(b) Maximum pulse height, kV..... 4.0
(c) Minimum pulse width, µs @ kV..... 1.3 @ 2.7
(d) Minimum pulse repetition rate per half cycle ..... 1
(e) Pulse position(s) for lag circuit ballasts ..... 64°-110°, 244°-290°
(f) Pulse position(s) for lead circuit ballasts ..... During the period when the OCV exceeds 90% peak.

### 2.4 Starting Current Requirements

| | Lag ballasts | Peak-lead ballasts |
|---|---|---|
| Minimum starting current, A rms | 2.1 | 2.1 |
| Maximum starting current, A rms | 3.2 | 3.2 |

### 2.5 Current Crest Factor

Maximum Current Crest Factor ……1.8

### 2.6 Maximum Voltage across Lamp Terminals

| RMS | Peak | Peak Pulse |
|---|---|---|
| 528 | 1100 | 4000 |

### 2.7 Lamp Operating Wattage

Design Center……. 250 watts

Range, 100-hour lamps…… 200 to 300 watts

## 3 INFORMATION FOR LUMINAIRE DESIGN ("CAUTION" of 7 (Part I) applies)

### 3.1 Voltage Rise, Luminaire Effect Limit

Lamp voltage change……. 5 volts, rms


Copyright 2004 © American National Standard Lighting Group – NEMA


Copyright National Electrical Manufacturers Association
Provided by IHS under license with NEMA
No reproduction or networking permitted without license from IHS
Not for Resale

**320 Watt M154 Pulse-Start Metal-Halide Lamp**

## 1 LAMP SPECIFICATIONS

### 1.1 Lamp Designations and Descriptions

| Designation | Bulb | Maximum Outline Drawing | Base |
|---|---|---|---|
| M154/E-KA | BT28 (BT90) or ED28 (ED75) | Fig. 8 | E39 Mogul Screw |
| M154/O-QC | BT28 (BT90) or ED28 (ED75) | Fig. 8 | EX39 Mogul Exclusionary |
| M154/E-ZC | BT37 (BT118) or ED37 (ED118) | Fig. 9 | E39 Mogul Screw |
| M154/O-TC | BT37 (BT118) or ED37 (ED118) | Fig. 9 | EX39 Mogul Exclusionary |

### 1.2 Lamp Physical Characteristics

| | *M154/O-QC*<br>*M154/E-KA* | *M154/O-TC*<br>*M154/E-ZC* |
|---|---|---|
| Bulb | BT28 (BT75)<br>ED28 (ED75) | BT37 (BT118)<br>ED37 (ED118) |
| Base | E39 for /E<br>EX39 for /O | E39 for /E<br>EX39 for /O |
| Nominal diameter [1] | 90.0 (3.50) | 118 (4.6) |
| Maximum overall length (MOL) [1] | 211 (8.31) | 292 (11.5) |
| Light center length (LCL) [1] | 127 ± 5<br>(5 ± 0.2) | 178 ± 6<br>(7 ± 0.24) |
| Effective arc length [1] | 24 – 38<br>(0.94 – 1.50) | 24 – 38<br>(0.94 – 1.50) |
| Maximum electrode tip deviation [2] | 3 | 3 |
| Maximum permissible bulb temperature [3] | 400 (752) | 400 (752) |
| Maximum permissible base temperature [3] | 210 (410) | 210 (410) |

[1] Dimensions are in mm, with equivalent inches within parentheses
[2] Maximum electrode tip deviation is from base axis (apex at base eyelet), measured in degrees
[3] Temperatures are in ºC, with equivalent ºF within parentheses

### 1.3 Operating Requirements at 100 hours

| | Min | Nom | Max |
|---|---|---|---|
| Voltage at lamp terminals (V, rms) | 120 | 135 | 150 |
| Lamp current (A, rms) | | 2.63 | |
| Lamp wattage (W) | | 320 | |


Copyright 2004 © American National Standard Lighting Group – NEMA


Copyright National Electrical Manufacturers Association
Provided by IHS under license with NEMA
No reproduction or networking permitted without license from IHS
Not for Resale

### 1.4 Lamp Reignition Voltage Spike (Vrs) During Warm-up

Maximum Reignition Voltage Spike ..... 150 volts, peak

Electrical Conditions:
Supply voltage ..... 350 volts
Ballast short circuit current ..... 3.89 amperes
Impedance ..... 90 ohms

### 1.5 Lamp Reignition Voltage (Vr) During Steady Operation

Maximum Reignition Voltage ..... 270V

### 1.6 Lamp Starting Voltage and Warm up Requirements

#### 1.6.1 Lamp Starting Voltage Requirements as a function of time and temperature

Lamps shall start within the time specified at the ambient temperature indicated when the minimum open-circuit test voltages and the minimum starting pulse, Sec. 2.3, are applied.

| *Temperature* | *Minimum OCV* | | *Time* | *Probability of starting within the time specified* |
|---|---|---|---|---|
| | *Vrms* | *Vpeak* | | |
| 10°C ± 1°C (50°F ± 2°F) | 254 | 359 | 120 s | 98% of 0-hour lamps |
| -30°C ± 1°C (-22°F ± 2°F) | 254 | 359 | 120 s | 90% of 100-hour lamps |

#### 1.6.2 Lamp Warm-Up Requirements

Time to 95% of minimum lamp operating voltage..... 10 minutes

### 1.7 Reference Ballast Characteristics

Rated input voltage..... 220 V
Reference current..... 2.63 A
Impedance..... 55 Ω

## 2 DATA FOR BALLAST DESIGN

### 2.1 Requirements for Lag Ballast

#### 2.1.2 For Lamps Requiring an External Ignitor

| *Temperature* | *Minimum OCV*[1] | | *Time* | *Probability of starting within the time specified* |
|---|---|---|---|---|
| | *Vrms* | *Vpeak* | | |
| 10°C ± 1°C (50°F ± 2°F) | 254 | 345[#] | 120 s | 98% of 0-hour lamps |
| -30°C ± 1°C (-22°F ± 2°F) | 254 | 345 | 120 s | 90% of 100-hour lamps |

[1] OCV (open circuit voltage) is measured with the ignitor removed from the circuit at minimum line conditions.

### 2. 2 Requirements for Peak Lead Ballasts

#### 2.2.2 For Lamps Requiring an External Ignitor

[#] 345V is lower than the product of 1.414 and Vrms to accommodate magnetic regulated ballasts.


Copyright 2004 © American National Standard Lighting Group – NEMA


Copyright National Electrical Manufacturers Association
Provided by IHS under license with NEMA
No reproduction or networking permitted without license from IHS
Not for Resale

| *Temperature* | Minimum OCV[1] *Vrms* | *Peak Volts* | Time | *Probability of starting within the time specified* |
|---|---|---|---|---|
| 10°C ± 1°C (50°F ± 2°F) | 254 | 483 | 120 s | 98% for 0-h lamps |
| -30°C ± 1°C (-22°F ± 2°F) | 254 | 483 | 120 s | 90% for 100-h lamps |

[1] OCV (open circuit voltage) is measured with the ignitor removed from the circuit at minimum line conditions.

### 2.2.3 Current Waveshape Characteristic Requirements for Peak Lead Ballasts

Off time (OT), maximum…… 2.3 milliseconds
Peak Current, maximum…… 7.0 amperes
Overshoot (OS), maximum…… 80 milliamperes

### 2.2.4 Minimum Sustaining Voltage (Vss) for Peak Lead Ballasts

Sustaining Voltage (Vss) Minimum: 270 V

The ballast shall meet this value at minimum rated input voltage for reliable lamp operation during warm-up and through life.

## 2.3 Ignitor Requirements

(a) Minimum pulse height, kV..... 3.0
(b) Maximum pulse height, kV..... 4.0
(c) Minimum pulse width, µs @ kV..... 1.3 @ 2.7
(d) Minimum pulse repetition rate per half cycle ..... 1
(e) Pulse position(s) for lag circuit ballasts ..... 64°-110°, 244°-290°
(f) Pulse position(s) for lead circuit ballasts ..... During the period when the OCV exceeds 90% peak.

## 2.4 Starting Current Requirements

| | Lag ballasts | Peak-lead ballasts |
|---|---|---|
| Minimum starting current, A rms | 2.63 | 2.63 |
| Maximum starting current, A rms | 4.0 | 4.0 |

## 2.5 Current Crest Factor

Maximum Current Crest Factor ……1.8

## 2.6 Maximum Voltage across Lamp Terminals

| RMS | Peak | Peak Pulse |
|---|---|---|
| 528 | 1100 | 4000 |

## 2.7 Lamp Operating Wattage

Design Center…… 320 watts

Range, 100-hour lamps…… 256 to 384 watts

## 3.0 INFORMATION FOR LUMINAIRE DESIGN ("CAUTION" of 7 (Part I) applies)

## 3.1 Voltage Rise, Luminaire Effect Limit

Lamp voltage change…… 5 volts, rms


Copyright 2004 © American National Standard Lighting Group – NEMA


Copyright National Electrical Manufacturers Association
Provided by IHS under license with NEMA
No reproduction or networking permitted without license from IHS
Not for Resale

**400 Watt M59 Metal Halide Lamp**

## 1. LAMP SPECIFICATIONS

### 1.1 Lamp Designations and Descriptions

| Designation | Bulb | Max. Outline Drawing | Base |
|---|---|---|---|
| M59/E-AC | T15 (T48) | Fig. 5 | E39 Mogul screw |
| M59/E-EJ | E18 (E57) | Fig. 6 | E39 Mogul screw |
| M59/E-KA | BT28 (BT90) or ED28 (ED75) | Fig. 8 | E39 Mogul screw |
| M59/S or E-ZC | BT37 (BT118) or ED37 (ED118) | Fig. 9 | E39 Mogul screw |
| M59/O-TC | BT37 (BT118) or ED37 (ED118) | Fig. 9 | EX39 Mogul Exclusionary |
| M59/E-TB | BT37 (BT118) or ED37 (ED118) | Fig. 9 | EP39 Mogul Position Oriented |

### 1.2 Lamp Physical Characteristics

| | *M59/E-AC* | *M59/E-EJ* | *M59/E-KA* | *M59/S-ZC M59/E-ZC M59/E-TB* | *M59/O-TC* |
|---|---|---|---|---|---|
| Bulb | T15 (T48) | E18 (E57) | BT28 (BT75) ED28 (ED75) | BT37 (BT118) ED37 (ED118) | BT37 (BT118) ED37 (ED118) |
| Base | E39 | E39 | E39 | E39/EP39 | EX39 |
| Nominal diameter [1] | 48 (1.875) | 57 (2.25) | 90.0 (3.50) | 118 (4.6) | 118 (4.6) |
| Maximum overall length (MOL) [1] | 248 (9.76) | 248 (9.76) | 211 (8.31) | 292 (11.5) | 292 (11.5) |
| Light center length (LCL) [1] | 146 ± 3 (5.75 ± 0.12) | 146 ± 3 (5.75 ± 0.12) | 127 ± 5 (5 ± 0.2) | 178 ± 6 (7 ± 0.24) | 178 ± 6 (7 ± 0.24) |
| Effective arc length [1] | 32 - 46 (1.3 – 1.8) | 32 - 46 (1.3 – 1.8) | 32 - 46 (1.3 – 1.8) | 32 - 46 (1.3 – 1.8) | 32 - 46 (1.3 – 1.8) |
| Maximum electrode tip deviation [2] | 3 | 3 | 3 | 3 | 3 |
| Maximum permissible bulb temperature [3] | 430 (806) | 430 (806) | 400 (752) | 400 (752) | 400 (752) |
| Maximum permissible base temperature [3] | 210 (410) | 210 (410) | 210*(410) | 210 (410) | 210 (410) |

[1] Dimensions are in mm, with equivalent inches within parentheses
[2] Maximum electrode tip deviation is from base axis (apex at base eyelet), measured in degrees
[3] Temperatures are in ºC, with equivalent ºF within parentheses
* Some manufacturers rate base temperature up to 250ºC

### 1.3 Operating Requirements at 100 Hours

| | Vertical Base Up | | | Horizontal | | |
|---|---|---|---|---|---|---|
| | Min | Nom | Max | Min | Nom | Max |
| Voltage at lamp terminals (V, rms) | 120 | 135 | 150 | 118 | 133 | 148 |
| Lamp current (A, rms) | | 3.25 | | | 3.25 | |
| Lamp wattage (W) | | 400 | | | 400 | |


Copyright 2004 © American National Standard Lighting Group – NEMA


Copyright National Electrical Manufacturers Association
Provided by IHS under license with NEMA
No reproduction or networking permitted without license from IHS
Not for Resale

### 1.4 Lamp Reignition Voltage Spike (Vrs) During Warm-up

Maximum Reignition Voltage Spike ……. 150 volts, peak

Electrical Conditions:
Supply voltage ……. 350 volts
Ballast short circuit current …… 4.0 amperes
Impedance …… 87.5 ohms

### 1.5 Lamp Reignition Voltage (Vr) During Steady Operation

Maximum Reignition Voltage.....……..... 250 volts

### 1.6 Lamp Starting Voltage and Warm-up Requirements

#### 1.6.1 Lamp Starting Voltage Requirements as a Function of Time and Temperature

Lamps shall start within the time specified at the ambient temperature indicated under the following test conditions:

| *Temperature* | *Minimum OCV* | | *Time* | *Probability of starting within the time specified* |
|---|---|---|---|---|
| | *Vrms* | *Vpeak* | | |
| 10°C ± 1°C (50°F ± 2°F) | 350 | 495 | 120 s | 98% of 0-hour lamps |
| -30°C ± 1°C (-22°F ± 2°F) | 382 | 540 | 120 s | 90% of 100-hour lamps |

#### 1.6.2 Lamp Warm-Up Requirements

Time to 95% of minimum lamp operating voltage……. 10 minutes

### 1.7 Reference ballast Characteristics

Rated input voltage……. 220 V
Reference current…… 3.25 A
Impedance…… 45 Ω

## 2 DATA FOR BALLAST DESIGN

### 2.1 Requirements for Lag Ballasts

#### 2.1.1 For Lamp Not Requiring an External Ignitor

| *Temperature* | *Minimum OCV* | | *Time* | *Probability of starting within the time specified* |
|---|---|---|---|---|
| | *Vrms* | *Vpeak* | | |
| 10°C ± 1°C (50°F ± 2°F) | 350 | 495 | 120 s | 98% of 0-hour lamps |
| -30°C ± 1°C (-22°F ± 2°F) | 382 | 540 | 120 s | 90% of 100-hour lamps |

### 2.2 Requirements for Peak Lead Ballasts

#### 2.2.1 For Lamps not Requiring External Ignitor

| *Temperature* | Minimum OCV | | Time | *Probability of starting within the time specified* |
|---|---|---|---|---|
| | *Volts,rms* | *Crest factor* | | |
| 10°C ± 1°C (50°F ± 2°F) | 280* | 1.8 | 120 s | 98% for 0-h lamps |
| -30°C ± 1°C (-22°F ± 2°F) | 295** | 1.8 | 120 s | 90% for 100-h lamps |

*The rms open-circuit voltage may be reduced by 10 volts for each 0.1 increase of the voltage crest factor, down to 240 volts rms, as the lowest value.
** The rms open-circuit voltage may be reduced by 10 volts for each 0.1 increase in the voltage crest factor, down to 275 volts rms, as the lowest value.


Copyright 2004 © American National Standard Lighting Group – NEMA


Copyright National Electrical Manufacturers Association
Provided by IHS under license with NEMA
No reproduction or networking permitted without license from IHS
Not for Resale

### 2.2.3 Current Waveshape Characteristic Requirements for Peak Lead Ballasts

Current slope (di/dt), minimum…… 1.0 amperes per millisecond
Off time (OT), maximum…….. 2.75 milliseconds
Peak Current, maximum…….. 9.0 amperes
Overshoot (OS), maximum…….. 100 milliamperes

### 2.2.4 Minimum Sustaining Voltage (Vss) for Peak Lead Ballasts

| Minimum Sustaining Voltage (Vss) | | | | | | | |
|---|---|---|---|---|---|---|---|
| | Current Slope (di/dt), amperes per millisecond, at I=0 | | | | | | |
| Off-time (milliseconds) | 1.0 | 1.5 | 2.0 | 2.5 | 3.0 | 3.5 | 4.0 |
| 2.75 | 294 | 285 | 276 | 266 | 257 | 247 | 238 |
| 2.50 | 288 | 279 | 269 | 260 | 251 | 241 | 232 |
| 2.00 | 276 | 266 | 257 | 248 | 238 | 229 | 220 |
| 1.50 | 263 | 254 | 245 | 235 | 226 | 217 | 207 |
| 1.00 | 251 | 242 | 232 | 223 | 214 | 204 | 195 |
| 0.50 | 239 | 229 | 220 | 210 | 201 | 192 | 183 |

The values given in this table are derived from the equation: $Vss = C_1 + C_2 (OT) – C_3 (di/dt)$ where:

Vss = minimum sustaining voltage in volts, (rms)
OT = Off-time in milliseconds
di/dt = Current slope at I=0 in amperes per millisecond
C1 = 245 C2 = 24.7 C3 = 18.7

### 2.3 Ignitor Requirements - NA

### 2.4 Starting Current Requirements

| | Lag ballasts | Peak-lead ballasts |
|---|---|---|
| Minimum starting current, A rms | 3.2 | 3.2 |
| Maximum starting current, A rms | 5.0 | 5.0 |

### 2.5 Current Crest Factor

Maximum Current Crest Factor…… 1.8

### 2.6 Maximum Voltage across Lamp Terminals

| RMS | Peak | Peak Pulse |
|---|---|---|
| 528 | 1100 | NA |

### 2.7 Lamp Operating Wattage

Design Center…….. 400 watts
Range, 100-hour lamps…… 320 to 480 watts

## 3 INFORMATION FOR LUMINAIRE DESIGN ("CAUTION" of 7 (Part I) applies)

### 3.1 Voltage Rise, Luminaire Effect Limit

Lamp voltage change…….. 5 volts, rms


Copyright 2004 © American National Standard Lighting Group – NEMA


Copyright National Electrical Manufacturers Association
Provided by IHS under license with NEMA
No reproduction or networking permitted without license from IHS
Not for Resale

**400 Watt M155 Pulse-Start Metal-Halide Lamp**

## 1 LAMP SPECIFICATIONS

### 1.1 Lamp Designations and Descriptions

| Designation | Bulb | Maximum Outline Drawing | Base |
|---|---|---|---|
| M155/E-KA | BT28 (BT90) | Fig. 8 | E39 Mogul Screw |
| M155/O-QC | BT28 (BT90) | Fig. 8 | EX39 Mogul Exclusionary |
| M155/E-ZC | BT37 (BT118) | Fig. 9 | E39 Mogul Screw |
| M155/S-ZC | BT37 (BT118) | Fig. 9 | E39 Mogul Screw |
| M155/O-TC | BT37 (BT118) | Fig. 9 | EX39 Mogul Exclusionary |

### 1.2 Lamp Physical Characteristics

| | *M155/O-QC*<br>*M155/E-KA* | *M155/O-TC*<br>*M155/S-ZC*<br>*M155/E-ZC* |
|---|---|---|
| Bulb | BT28 (BT75)<br>ED28 (ED75) | BT37 (BT118)<br>ED37 (ED118) |
| Base | E39 for /E<br>EX39 for /O | E39 for /E<br>EX39 for /O |
| Nominal diameter [1] | 90.0 (3.50) | 118 (4.6) |
| Maximum overall length (MOL) [1] | 211 (8.31) | 292 (11.5) |
| Light center length (LCL) [1] | 127 ± 5<br>(5 ± 0.2) | 178 ± 6<br>(7 ± 0.24) |
| Effective arc length [1] | 32 - 46<br>(1.3 – 1.8) | 32 - 46<br>(1.3 – 1.8) |
| Maximum electrode tip deviation [2] | 3 | 3 |
| Maximum permissible bulb temperature [3] | 400 (752) | 400 (752) |
| Maximum permissible base temperature [3][4] | 210 (410) | 210 (410) |

[1] Dimensions are in mm, with equivalent inches within parentheses
[2] Maximum electrode tip deviation is from base axis (apex at base eyelet), measured in degrees
[3] Temperatures are in ºC, with equivalent ºF within parentheses
[4] Some manufacturers rate base temperature at values up to 250ºC

### 1.3 Operating Requirements at 100 hours

| | Min | Nom | Max |
|---|---|---|---|
| Voltage at lamp terminals (V, rms) | 120 | 135 | 150 |
| Lamp current (A, rms) | | 3.25 | |
| Lamp wattage (W) | | 400 | |


Copyright 2004 © American National Standard Lighting Group – NEMA


Copyright National Electrical Manufacturers Association
Provided by IHS under license with NEMA
No reproduction or networking permitted without license from IHS
Not for Resale

### 1.4 Lamp Reignition Voltage Spike (Vrs) During Warm-up

Maximum Reignition Voltage Spike ..... 150 volts, peak

Electrical Conditions:
Supply voltage ..... 350 volts
Ballast short circuit current ..... 4.00 amperes
Impedance ..... 87.5 ohms

### 1.5 Lamp Reignition Voltage (Vr) During Steady Operation

Maximum Reignition Voltage ..... 270 volts

### 1.6 Lamp Starting Voltage and Warm up Requirements

#### 1.6.1 Lamp Starting Voltage Requirements as a function of time and temperature

Lamps shall start within the time specified at the ambient temperature indicated when the minimum open-circuit test voltages and the minimum starting pulse, Sec. 2.3, are applied.

| *Temperature* | *Minimum OCV* | | *Time* | *Probability of starting within the time specified* |
|---|---|---|---|---|
| | *Vrms* | *Vpeak* | | |
| 10°C ± 1°C (50°F ± 2°F) | 254 | 359 | 120 s | 98% of 0-hour lamps |
| -30°C ± 1°C (-22°F ± 2°F) | 254 | 359 | 120 s | 90% of 100-hour lamps |

#### 1.6.2 Lamp Warm-Up Requirements

Time to 95% of minimum lamp operating voltage..... 10 minutes

### 1.7 Reference Ballast Characteristics

Rated input voltage..... 220 V
Reference current..... 3.25 A
Impedance..... 45 Ω

## 2 DATA FOR BALLAST DESIGN

### 2.1 Requirements for Lag Ballast

#### 2.1.2 For Lamps Requiring an External Ignitor

| *Temperature* | *Minimum OCV*[1] | | *Time* | *Probability of starting within the time specified* |
|---|---|---|---|---|
| | *Vrms* | *Vpeak* | | |
| 10°C ± 1°C (50°F ± 2°F) | 254 | 345[#] | 120 s | 98% of 0-hour lamps |
| -30°C ± 1°C (-22°F ± 2°F) | 254 | 345 | 120 s | 90% of 100-hour lamps |

[1] OCV (open circuit voltage) is measured with the ignitor removed from the circuit at minimum line conditions.

### 2. 2 Requirements for Peak Lead Ballasts

#### 2.2.2 For Lamps Requiring an External Ignitor

[#] 345V is lower than the product of 1.414 and Vrms to accommodate magnetic regulated ballasts.


Copyright 2004 © American National Standard Lighting Group – NEMA


Copyright National Electrical Manufacturers Association
Provided by IHS under license with NEMA
No reproduction or networking permitted without license from IHS
Not for Resale

| Temperature | Minimum OCV[1] Vrms | Peak Volts | Time | Probability of starting within the time specified |
|---|---|---|---|---|
| 10°C ± 1°C (50°F ± 2°F) | 254 | 483 | 120 s | 98% for 0-h lamps |
| -30°C ± 1°C (-22°F ± 2°F) | 254 | 483 | 120 s | 90% for 100-h lamps |

[1] OCV (open circuit voltage) is measured with the ignitor removed from the circuit at minimum line conditions.

### 2.2.3 Current Waveshape Characteristic Requirements for Peak Lead Ballasts

Off time (OT), maximum…… 2.3 milliseconds
Peak Current, maximum…… 9.0 amperes
Overshoot (OS), maximum…… 100 milliamperes

### 2.2.4 Minimum Sustaining Voltage (Vss) for Peak Lead Ballasts

Sustaining Voltage (Vss) Minimum: 270 V

The ballast shall meet this value at minimum rated input voltage for reliable lamp operation during warm-up and through life.

### 2.3 Ignitor Requirements

(a) Minimum pulse height, kV ……3.0
(b) Maximum pulse height, kV..... 4.0
(c) Minimum pulse width, µs @ kV..... 1.3 @ 2.7
(d) Minimum pulse repetition rate per half cycle ..... 1
(e) Pulse position(s) for lag circuit ballasts ..... 64°-110°, 244°-290°
(f) Pulse position(s) for lead circuit ballasts ..... During the period when the OCV exceeds 90% peak.

### 2.4 Starting Current Requirements

| | Lag ballasts | Peak-lead ballasts |
|---|---|---|
| Minimum starting current, A rms | 3.2 | 3.2 |
| Maximum starting current, A rms | 5.0 | 5.0 |

### 2.5 Current Crest Factor

Maximum Current Crest Factor ……1.8

### 2.6 Maximum Voltage across Lamp Terminals

| RMS | Peak | Peak Pulse |
|---|---|---|
| 528 | 1100 | 4000 |

### 2.7 Lamp Operating Wattage

Design Center……. 400 watts

Range, 100-hour lamps…… 320 to 480 watts

## 3.0 INFORMATION FOR LUMINAIRE DESIGN ("CAUTION" of 7 (Part I) applies)

### 3.1 Voltage Rise, Luminaire Effect Limit

Lamp voltage change……. 5 volts, rms


Copyright 2004 © American National Standard Lighting Group – NEMA


Copyright National Electrical Manufacturers Association
Provided by IHS under license with NEMA
No reproduction or networking permitted without license from IHS
Not for Resale

**1000 Watt M47 Metal Halide Lamp**

## 1 LAMP SPECIFICATIONS

### 1.1 Lamp Designations and Descriptions

| Designation | Bulb | Max. Outline Drawing | Base |
|---|---|---|---|
| M47/O-GH | BT56 (BT180) | Fig. 10 | EX39 Mogul screw |
| M47/S or E-GH | BT56 (BT180) | Fig. 10 | E39 Mogul screw |
| M47/E-ZC | BT37 (BT118) or ED37 (ED118) | Fig. 9 | E39 Mogul screw |

### 1.2 Lamp Physical Characteristics

| | *M47/E-ZC* | *M47/E-GH M47/S-GH* | *M47/O-GH* |
|---|---|---|---|
| Bulb | BT37 (BT118) ED37 (ED118) | BT56 (BT180) | BT56 (BT180) |
| Base Size | E39 | E39 | EX39 |
| Nominal diameter [1] | 118 (4.6) | 180 (7.0) | 180 (7.0) |
| Maximum overall length (MOL) [1] | 292 (11.5) | 391 (15.38) | 391 (15.38) |
| Light center length (LCL) [1] | 178 ± 6 (7.0 ± 0.24) | 241 ± 6 (9.5 ± 0.24) | 241 ± 6 (9.5 ± 0.24) |
| Effective arc length [1] | 82 - 98 (3.2 – 3.8) | 82 - 98 (3.2 – 3.8) | 82 - 98 (3.2 – 3.8) |
| Maximum electrode tip deviation [2] | 3 | 3 | 3 |
| Maximum permissible bulb temperature [3] | 430 (806) | 430 (806) | 430 (806) |
| Maximum permissible base temperature [3] | 210* (410) | 210 (410) | 210 (410) |

[1] Dimensions are in mm, with equivalent inches within parentheses
[2] Maximum electrode tip deviation is from base axis (apex at base eyelet), measured in degrees
[3] Temperatures are in ºC, with equivalent ºF within parentheses
* Some manufacturers rate base temperature up to 250ºC

### 1.3 Operating requirements at 100 hours

| | Vertical Base Up | | | Horizontal | | |
|---|---|---|---|---|---|---|
| | Min | Nom | Max | Min | Nom | Max |
| Voltage at lamp terminals (V, rms) | 238 | 263 | 288 | 230 | 255 | 280 |
| Lamp current (A, rms) | | 4.1 | | | 4.2 | |
| Lamp wattage (W) | | 1000 | | | 1000 | |


Copyright 2004 © American National Standard Lighting Group – NEMA


Copyright National Electrical Manufacturers Association
Provided by IHS under license with NEMA
No reproduction or networking permitted without license from IHS
Not for Resale

### 1.4 Lamp Reignition Voltage Spike (Vrs) During Warm-up

Maximum Reignition Voltage Spike ..... 250 volts, peak

Electrical Conditions:
Supply voltage ..... 440 volts
Ballast short circuit current ..... 5.7 amperes
Impedance ..... 77.4 ohms

### 1.5 Lamp Reignition Voltage (Vr) During Steady Operation

Maximum Reignition Voltage.....…….…. 470 volts

### 1.6 Lamp Starting Voltage and Warm-up Requirements

#### 1.6.1 Without External Starting Circuit

Lamps shall start within the time specified at the ambient temperature indicated under the following test conditions:

| *Temperature* | *Minimum OCV* | | *Time* | *Probability of starting within the time specified* |
|---|---|---|---|---|
| | *Vrms* | *Vpeak* | | |
| 10°C ± 1°C (50°F ± 2°F) | 440 | 622 | 120 s | 98% of 0-hour lamps |
| -30°C ± 1°C (-22°F ± 2°F) | 530 | 750 | 120 s | 90% of 100-hour lamps |

#### 1.6.2 Lamp Warm-Up Requirements

Time to 95% of minimum lamp operating voltage……. 10 minutes

### 1.7 Reference Ballast Characteristics

Rated input voltage……. 460 V
Reference current…… 4.1 A
Impedance…… 79 Ω

## 2 DATA FOR BALLAST DESIGN

### 2.1 Requirements for Lag Ballasts

#### 2.1.1 For Lamps Not Requiring an External Ignitor

| *Temperature* | *Minimum OCV* | | *Time* | *Probability of starting within the time specified* |
|---|---|---|---|---|
| | *Vrms* | *Vpeak* | | |
| 10°C ± 1°C (50°F ± 2°F) | 440 | 622 | 120 s | 98% of 0-hour lamps |
| -30°C ± 1°C (-22°F ± 2°F) | 530 | 750 | 120 s | 90% of 100-hour lamps |

### 2.2 Requirements For Peak Lead Ballasts

#### 2.2.1 For Lamps Not Requiring an External Ignitor

| *Temperature* | *Minimum OCV* | | *Time* | *Probability of starting within the time specified* |
|---|---|---|---|---|
| | *Vrms* | *Crest Factor* | | |
| 10°C ± 1°C (50°F ± 2°F) | 340* | 2.0 | 120 s | 98% of 0-hour lamps |
| -30°C ± 1°C (-22°F ± 2°F) | 380** | 2.0 | 120 s | 90% of 100-hour lamps |

*The rms open-circuit voltage may be reduced by 10 volts for each 0.1 increase of the voltage crest factor, down to 320 volts rms, as the lowest value.


Copyright 2004 © American National Standard Lighting Group – NEMA


Copyright National Electrical Manufacturers Association
Provided by IHS under license with NEMA
No reproduction or networking permitted without license from IHS
Not for Resale

**The rms open-circuit voltage may be reduced by 10 volts for each 0.1 increase in the voltage crest factor, down to 360 volts rms, as the lowest value.

### 2.2.3 Current Waveshape Characteristic Requirements for Peak Lead Ballasts

Current slope (di/dt), minimum…… 1.5 amperes per millisecond
Off time (OT), maximum…….. 2.5 milliseconds
Peak Current, maximum…….. 11.5 amperes
Overshoot (OS), maximum…….. 100 milliamperes

### 2.2.4 Minimum Sustaining Voltage (Vss) for Peak Lead Ballasts

| Minimum Sustaining Voltage (Vss) | | | | | | |
|---|---|---|---|---|---|---|
| | Current Slope (di/dt), amperes per millisecond, at I=0 | | | | | |
| Off-time (milliseconds) | 1.5 | 2.0 | 3.0 | 4.0 | 5.0 | 6.0 |
| 2.5 | 344 | 338 | 333 | 328 | 323 | 318 |
| 2.0 | 328 | 326 | 321 | 316 | 311 | 306 |
| 1.5 | 315 | 312 | 307 | 302 | 297 | 292 |
| 1.0 | 299 | 295 | 290 | 288 | 283 | 278 |

The values given in this table are derived from the equation: $Vss = C_1 + C_2 (OT) – C_3 (di/dt)$ where:

Vss = minimum sustaining voltage in volts, (rms)
OT = Off-time in milliseconds
di/dt = Current slope at I=0 in amperes per millisecond
C1 = 278 C2 = 27.6 C3 = 4.15

### 2.3 Ignitor Requirements - NA

### 2.4 Starting Current Requirements

| | Lag ballasts | Peak-lead ballasts |
|---|---|---|
| Minimum starting current, A rms | 4.2 | 4.2 |
| Maximum starting current, A rms | 7.5 | 6.5 |

### 2.5 Current Crest Factor

Maximum Current Crest Factor……..… 1.8

### 2.6 Maximum Voltage across Lamp Terminals

| RMS | Peak | Peak Pulse |
|---|---|---|
| 530 | 2150 | NA |

### 2.7 Lamp Operating Wattage

Design Center……... 1000 watts

Range, 100-hour lamps…… 800 to 1200 watts

## 3.0 INFORMATION FOR LUMINAIRE DESIGN ("CAUTION" of 7 (Part I) applies)

### 3.1 Voltage Rise, Luminaire Effect Limit

Lamp voltage change……. 10 volts, rms


Copyright 2004 © American National Standard Lighting Group – NEMA


Copyright National Electrical Manufacturers Association
Provided by IHS under license with NEMA
No reproduction or networking permitted without license from IHS
Not for Resale

**1500 Watt M48 Metal Halide Lamp**

## 1 LAMP SPECIFICATIONS

### 1.1 Lamp designations and descriptions

| Designation | Bulb | Maximum Outline Drawing | Base |
|---|---|---|---|
| M48/E-GH | BT56 (BT180) | Fig. 10 | E39 Mogul screw |

### 1.2 Lamp Physical Characteristics

| | *M48/E-GH* |
|---|---|
| Bulb | BT56 (BT180) |
| Base Size | E39 |
| Nominal diameter [1] | 180 (7.0) |
| Maximum overall length (MOL) [1] | 391 (15.38) |
| Light center length (LCL) [1] | 241 ± 6 (9.5 ± 0.24) |
| Effective arc length [1] | 82 - 98 (3.2 – 3.8) |
| Maximum electrode tip deviation [2] | 3 |
| Maximum permissible bulb temperature [3] | 430 (806) |
| Maximum permissible base temperature [3] | 210 (410) |

[1] Dimensions are in mm, with equivalent inches within parentheses
[2] Maximum electrode tip deviation is from base axis (apex at base eyelet), measured in degrees
[3] Temperatures are in ºC, with equivalent ºF within parentheses

### 1.3 Operating requirements at 100 hours

| | Min | Nom | Max |
|---|---|---|---|
| Voltage at lamp terminals (V, rms) | 253 | 268 | 283 |
| Lamp current (A, rms) | | 6.2 | |
| Lamp wattage (W) | | 1500 | |


Copyright 2004 © American National Standard Lighting Group – NEMA


Copyright National Electrical Manufacturers Association
Provided by IHS under license with NEMA
No reproduction or networking permitted without license from IHS
Not for Resale

### 1.4 Lamp Reignition Voltage Spike (Vrs) During Warm-up

Maximum Reignition Voltage Spike ……..…….. 150 volts, peak

Electrical Conditions:
Supply voltage ……. 440 volts
Ballast short circuit current ……..…… 7.6 amperes
Impedance …… 57.9 ohms

### 1.5 Lamp Reignition Voltage (Vr) During Steady Operation

Maximum Reignition Voltage.....…….…… 470 volts

### 1.6 Lamp Starting Voltage and Warm-up Requirements

#### 1.6.1 Without External Starting Circuit

Lamps shall start within the time specified at the ambient temperature indicated under the following test conditions:

| *Temperature* | *Minimum OCV* | | *Time* | *Probability of starting within the time specified* |
|---|---|---|---|---|
| | *Vrms* | *Vpeak* | | |
| 10°C ± 1°C (50°F ± 2°F) | 440 | 622 | 120 s | 98% of 0-hour lamps |
| -30°C ± 1°C (-22°F ± 2°F) | 530 | 750 | 120 s | 90% of 100-hour lamps |

#### 1.6.2 Lamp Warm-Up Requirements

Time to 95% of minimum lamp operating voltage…..…… 10 minutes

### 1.7 Reference ballast Characteristics

Rated input voltage…….…… 460 V
Reference current…… 6.2 A
Impedance…… 50.2 Ω

## 2 DATA FOR BALLAST DESIGN

### 2.1 Requirements for Lag Ballasts

#### 2.1.1 For Lamps Not Requiring an External Ignitor

| *Temperature* | *Minimum OCV* | | *Time* | *Probability of starting within the time specified* |
|---|---|---|---|---|
| | *Vrms* | *Vpeak* | | |
| 10°C ± 1°C (50°F ± 2°F) | 440 | 622 | 120 s | 98% of 0-hour lamps |
| -30°C ± 1°C (-22°F ± 2°F) | 530 | 750 | 120 s | 90% of 100-hour lamps |

### 2.2 Requirements for Peak Lead Ballasts

#### 2.2.1 For Lamps Not Requiring an External Ignitor

| *Temperature* | *Minimum OCV* | | *Time* | *Probability of starting within the time specified* |
|---|---|---|---|---|
| | *Vrms* | *Crest Factor* | | |
| 10°C ± 1°C (50°F ± 2°F) | 370* | 2.0 | 120 s | 98% of 0-hour lamps |
| -30°C ± 1°C (-22°F ± 2°F) | 410** | 2.0 | 120 s | 90% of 100-hour lamps |

* The rms open-circuit voltage may be reduced by 10 volts for each 0.1 increase of the voltage crest factor, down to 350 volts rms, as the lowest value.


Copyright 2004 © American National Standard Lighting Group – NEMA


Copyright National Electrical Manufacturers Association
Provided by IHS under license with NEMA
No reproduction or networking permitted without license from IHS
Not for Resale

** The rms open-circuit voltage may be reduced by 10 volts for each 0.1 increase in the voltage crest factor, down to 390 volts rms, as the lowest value.

### 2.2.3 Current Waveshape Characteristic Requirements for Peak Lead Ballasts

Current slope (di/dt), minimum…… 2.5 amperes per millisecond
Off time (OT), maximum…….. 2.75 milliseconds
Peak Current, maximum…….. 16 amperes
Overshoot (OS), maximum…….. 50 milliamperes

### 2.2.4 Minimum Sustaining Voltage (Vss) for Peak Lead Ballasts

| Minimum Sustaining Voltage (Vss) | | | | | | | |
|---|---|---|---|---|---|---|---|
| | Current Slope (di/dt), amperes per millisecond, at I=0 | | | | | | |
| Off-time (milliseconds) | 2.5 | 3.0 | 3.5 | 4.0 | 4.5 | 5.0 | 5.5 |
| 2.75 | 447 | 397 | 357 | 324 | 297 | 275 | 258 |
| 2.50 | 436 | 386 | 346 | 313 | 286 | 264 | 247 |
| 2.25 | 425 | 375 | 335 | 302 | 275 | 253 | 236 |
| 2.00 | 414 | 364 | 324 | 291 | 264 | 242 | 225 |
| 1.75 | 403 | 353 | 313 | 280 | 253 | 231 | 214 |
| 1.50 | 392 | 342 | 302 | 269 | 242 | 220 | 203 |

The values given in this table are derived from the equation: $Vss = C_1 + C_2 (OT) + C_3 e^{-0.41 di/dt}$ where:

Vss = minimum sustaining voltage in volts, (rms)
OT = Off-time in milliseconds
di/dt = Current slope at I=0 in amperes per millisecond
C1 = 59 C2 = 44 C3 = 745

### 2.3 Ignitor Requirements - NA

### 2.4 Starting Current Requirements

| | Lag ballasts | Peak-lead ballasts |
|---|---|---|
| Minimum starting current, A rms | 6.2 | 6.2 |
| Maximum starting current, A rms | 10.4 | 9.0 |

### 2.5 Current Crest Factor

Maximum Current Crest Factor…… 1.8

### 2.6 Maximum Voltage across Lamp Terminals

| RMS | Peak | Peak Pulse |
|---|---|---|
| 530 | 2150 | NA |

### 2.7 Lamp Operating Wattage

Design Center……. 1500 watts

Range, 100-hour lamps…… 1200 to 1800 watts

## 3.0 INFORMATION FOR LUMINAIRE DESIGN ("CAUTION" of 7 (Part I) applies)

### 3.1 Voltage Rise, Luminaire Effect Limit

Lamp voltage change……. 10 volts, rms


Copyright 2004 © American National Standard Lighting Group – NEMA


Copyright National Electrical Manufacturers Association
Provided by IHS under license with NEMA
No reproduction or networking permitted without license from IHS
Not for Resale

**1650 Watt M112 Metal Halide Lamp**

## 1 LAMP SPECIFICATIONS

### 1.1 Lamp designations and descriptions

| Designation | Bulb | Maximum Outline Drawing | Base |
|---|---|---|---|
| M112/E-GG | BT56 (BT180) | Fig. 10 | EP39 Mogul Position Oriented |

### 1.2 Lamp Physical Characteristics

| | *M112/E-GG* |
|---|---|
| Bulb | BT56 (BT180) |
| Base Size | EP39 |
| Nominal diameter [1] | 180 (7.0) |
| Maximum overall length (MOL) [1] | 391 (15.38) |
| Light center length (LCL) [1] | 241 ± 6 (9.5 ± 0.24) |
| Effective arc length [1] | 73 - 97 (2.8 – 3.8) |
| Maximum electrode tip deviation [2] | 3 |
| Maximum permissible bulb temperature [3] | 430 (806) |
| Maximum permissible base temperature [3] | 210 (410) |

[1] Dimensions are in mm, with equivalent inches within parentheses
[2] Maximum electrode tip deviation is from base axis (apex at base eyelet), measured in degrees
[3] Temperatures are in ºC, with equivalent ºF within parentheses

### 1.3 Operating requirements at 100 hours

As an exception to Part I, Section 5.3, this lamp is measured in the horizontal position with the correct orientation of the EP39 base.

| | **Horizontal** | | |
|---|---|---|---|
| | Min | Nom | Max |
| Voltage at lamp terminals (V, rms) | 255 | 270 | 285 |
| Lamp current (A, rms) | | 6.51 | |
| Lamp wattage (W) | | 1650 | |


Copyright 2004 © American National Standard Lighting Group – NEMA


Copyright National Electrical Manufacturers Association
Provided by IHS under license with NEMA
No reproduction or networking permitted without license from IHS
Not for Resale

### 1.4 Lamp Reignition Voltage Spike (Vrs) During Warm-up

Maximum Reignition Voltage Spike ……..…….. 150 volts, peak

Electrical Conditions:
Supply voltage ……. 440 volts
Ballast short circuit current ……..…… 7.6 amperes
Impedance …… 57.9 ohms

### 1.5 Lamp Reignition Voltage (Vr) During Steady Operation

Maximum Reignition Voltage.....…….…… 470 volts

### 1.6 Lamp Starting Voltage and Warm-up Requirements

As an exception to Part I, Section 5.6, this lamp is measured in the horizontal position with the correct orientation of the EP39 base.

#### 1.6.1 Without External Starting Circuit

Lamps shall start within the time specified at the ambient temperature indicated under the following test conditions:

| *Temperature* | *Minimum OCV* | | *Time* | *Probability of starting within the time specified* |
|---|---|---|---|---|
| | *Vrms* | *Vpeak* | | |
| 10°C ± 1°C (50°F ± 2°F) | 440 | 622 | 120 s | 98% of 0-hour lamps |
| -30°C ± 1°C (-22°F ± 2°F) | 530 | 750 | 120 s | 90% of 100-hour lamps |

#### 1.6.2 Lamp Warm-Up Requirements

Time to 95% of minimum lamp operating voltage…..…… 10 minutes

### 1.7 Reference ballast Characteristics

Rated input voltage…….…… 460 V
Reference current…… 6.51 A
Impedance…… 47.9 Ω

## 2 DATA FOR BALLAST DESIGN

### 2.1 Requirements for Lag Ballasts

#### 2.1.1 For Lamps Not Requiring an External Ignitor

| *Temperature* | *Minimum OCV* | | *Time* | *Probability of starting within the time specified* |
|---|---|---|---|---|
| | *Vrms* | *Vpeak* | | |
| 10°C ± 1°C (50°F ± 2°F) | 440 | 622 | 120 s | 98% of 0-hour lamps |
| -30°C ± 1°C (-22°F ± 2°F) | 530 | 750 | 120 s | 90% of 100-hour lamps |

### 2.2 Requirements for Peak Lead Ballasts

#### 2.2.1 For Lamps Not Requiring an External Ignitor

| *Temperature* | *Minimum OCV* | | *Time* | *Probability of starting within the time specified* |
|---|---|---|---|---|
| | *Vrms* | *Crest Factor* | | |
| 10°C ± 1°C (50°F ± 2°F) | 370* | 2.0 | 120 s | 98% of 0-hour lamps |
| -30°C ± 1°C (-22°F ± 2°F) | 410** | 2.0 | 120 s | 90% of 100-hour lamps |


Copyright 2004 © American National Standard Lighting Group – NEMA


Copyright National Electrical Manufacturers Association
Provided by IHS under license with NEMA
No reproduction or networking permitted without license from IHS
Not for Resale

* The rms open-circuit voltage may be reduced by 10 volts for each 0.1 increase of the voltage crest factor, down to 350 volts rms, as the lowest value.

** The rms open-circuit voltage may be reduced by 10 volts for each 0.1 increase in the voltage crest factor, down to 390 volts rms, as the lowest value.

### 2.2.3 Current Waveshape Characteristic Requirements for Peak Lead Ballasts

Current slope (di/dt), minimum…… 2.5 amperes per millisecond
Off time (OT), maximum…….. 2.75 milliseconds
Peak Current, maximum…….. 16 amperes
Overshoot (OS), maximum…….. 50 milliamperes

### 2.2.4 Minimum Sustaining Voltage (Vss) for Peak Lead Ballasts

| Minimum Sustaining Voltage (Vss) | | | | | | | |
|---|---|---|---|---|---|---|---|
| | Current Slope (di/dt), amperes per millisecond, at I=0 | | | | | | |
| Off-time (milliseconds) | 2.5 | 3.0 | 3.5 | 4.0 | 4.5 | 5.0 | 5.5 |
| 2.75 | 447 | 397 | 357 | 324 | 297 | 275 | 258 |
| 2.50 | 436 | 386 | 346 | 313 | 286 | 264 | 247 |
| 2.25 | 425 | 375 | 335 | 302 | 275 | 253 | 236 |
| 2.00 | 414 | 364 | 324 | 291 | 264 | 242 | 225 |
| 1.75 | 403 | 353 | 313 | 280 | 253 | 231 | 214 |
| 1.50 | 392 | 342 | 302 | 269 | 242 | 220 | 203 |

The values given in this table are derived from the equation: $Vss = C_1 + C_2 (OT) + C_3 e^{-0.41 di/dt}$ where:

Vss = minimum sustaining voltage in volts, (rms)
OT = Off-time in milliseconds
di/dt = Current slope at I=0 in amperes per millisecond
C1 = 59 C2 = 44 C3 = 745

### 2.3 Ignitor Requirements - NA

### 2.4 Starting Current Requirements

| | Lag ballasts | Peak-lead ballasts |
|---|---|---|
| Minimum starting current, A rms | 6.5 | 6.5 |
| Maximum starting current, A rms | 11.4 | 9.6 |

### 2.5 Current Crest Factor

Maximum Current Crest Factor…… 1.8

### 2.6 Maximum Voltage across Lamp Terminals

| RMS | Peak | Peak Pulse |
|---|---|---|
| 530 | 2150 | NA |

### 2.7 Lamp Operating Wattage

Design Center…….. 1650 watts

Range, 100-hour lamps…… 1320 to 1980 watts

### 3.0 INFORMATION FOR LUMINAIRE DESIGN ("CAUTION" of 7 (Part I) applies)

### 3.1 Voltage Rise, Luminaire Effect Limit

Lamp voltage change…….. 10 volts, rms


Copyright 2004 © American National Standard Lighting Group – NEMA


Copyright National Electrical Manufacturers Association
Provided by IHS under license with NEMA
No reproduction or networking permitted without license from IHS
Not for Resale