

ANSI C78.42-2004

Revision of ANSI C78.42-2001

American National Standard

for electric lamps—

High-Pressure Sodium Lamps

--`,,,`,`-`-`,,`,,`,`,,`---

Copyright National Electrical Manufacturers Association
Provided by IHS under license with NEMA
No reproduction or networking permitted without license from IHS

Not for Resale

Copyright National Electrical Manufacturers Association
Provided by IHS under license with NEMA
No reproduction or networking permitted without license from IHS
Not for Resale

ANSI C78.42-2004
Revision of ANSI C78.42-2001

American National Standard

Approved: December 30, 2004 Secretariat : ANSLG – National Electrical Manufacturers Association

for electric lamps:

High-Pressure Sodium Lamps

--`,,`,`-`-`,,`,,`,`,,`---

Copyright National Electrical Manufacturers Association [illegible]04 by American National Standard Lighting Group – NEMA
Provided by IHS under license with NEMA
No reproduction or networking permitted without license from IHS Not for Resale

American National Standard

Approval of an American National Standard requires verification by ANSI that the requirements for due process, consensus, and other criteria for approval have been met by the standards developer. An American National Standard implies a consensus of those substantially concerned with its scope and provisions. Consensus is established when, in the judgment of the ANSI Board of Standards Review, substantial agreement has been reached by directly and materially affected interests. Substantial agreement means much more than a simple majority, but not necessarily unanimity. Consensus requires that all views and objections be considered, and that a concerted effort be made toward their resolution. The existence of an American National Standard does not in any respect preclude anyone, whether s/he has approved the standard or not, from manufacturing, marketing, purchasing, or using products, processes, or procedures not conforming to the standards. It is intended as a guide to aid the manufacturer, the consumer, and the general public.

The American National Standards Institute does not develop standards and will in no circumstances give an interpretation of any American National Standard. Moreover, no person shall have the right or authority to issue an interpretation of an American National Standard in the name of the American National Standards Institute. Requests for interpretations should be addressed to the Committee Secretariat referred to on the title page.

CAUTION NOTICE: This American National Standard may be revised or withdrawn at any time. The procedures of the American National Standards Institute require that action be taken periodically to reaffirm, revise, or withdraw this standard. Purchasers of American National Standards may receive current information on all standards by calling or writing the American National Standards Institute.

Printed and distributed by:

Information Handling Services/Global Engineering Documents
15 Inverness Way East, Englewood, CO 80112-5776
Under Contract with National Electrical Manufacturers Association

Copyright ©2004 by American National Standard Lighting Group
In Affiliation with National Electrical Manufacturers Association
All rights reserved.

No part of this publication may be reproduced in any form,
in an electronic retrieval system or otherwise, without
prior written permission of the publisher.
Printed in the United States of America

Copyright National Electrical Manufacturers Association
Provided by IHS under license with NEMA
No reproduction or networking permitted without license from IHS Not for Resale

Contents

Organization of this standard 5

I. General requirements and information 7
1. Scope 7
2. Normative references 7
3. Definitions 7
4. Methods of measurement 7
5. Lamp specifications 8
5.1 Lamp designations and descriptions 8
5.2 Lamp physical and safety characteristics 8
5.3 Reference ballast requirements 9
5.4 Operating requirements at 100 hours 9
5.5 Lamp starting requirements 9
5.6 Warm-up time 10
6. Information for ballast design 10
6.1 Starting voltage requirements 10
6.2 Lamp starting current 10
6.3 Current off time 10
6.4 Current crest factor 10
6.5 Maximum peak voltage (across lamp terminals) 11
6.6 Lamp operating limit**s** 11
7. Information for luminaire design 11
7.1 Lamp voltage rise limits 11
7.2 Lamp temperatures 11
7.3 Lamp operating position 11

II. Annexes 12
Annex A: A guide for determining trapezoidal (quadrilateral) diagrams for HPS lamps 13
A.1 Introduction 13
A.2 The lamp characteristic curve 13
A.3 The ballast characteristic curve 14
A.4 Lamp wattage limits 14
A.5 Lamp voltage limits 15
A.6 Conclusions 16
Annex B: HPS lamp dropout voltage test procedure 17
B.1 Introduction 17
B.2 Theory 17
B.3 Methods of artificial heating 18
B.4 Description of equilibrium 18
B.5 Equipment 19
B.6 Procedure 20
B.7 Report 20
Annex C: Former ANSI C78.1350-series standards (informative) 21

Copyright © 2004 by American National Standard Lighting Group – NEMA

Copyright National Electrical Manufacturers Association
Provided by IHS under license with NEMA
No reproduction or networking permitted without license from IHS
Not for Resale

III. Maximum outline drawings 22
Drawing 42-10: B17 (B54), E17 (E54) bulb; E26/24 base; 138 mm MOL 23
Drawing 42-20: B17 (B54), E17 (E54) bulb; E26/24 base; 145 mm MOL 24
Drawing 42-30: E18 (E57) bulb; E39 base; 248 mm MOL 25
Drawing 42-40: B25 (B80), E23.5 (E75) bulb; E39 base; 197 mm MOL 26
Drawing 42-50: E25 (E78) bulb; E39 base; 383 mm MOL 27
Drawing 42-60: B28 (B90), E28 (E90) bulb; E39 base; 228 mm MOL 28
Drawing 42-70: B37 (B118), E37 (E118) bulb; E39 base; 292 mm MOL 29
Drawing 42-80: RL38 (RL121) bulb; E26/24 base; 158.1 mm MOL 30
Drawing 42-90: T15 (T48) bulb; E39 base; 285 mm MOL 31

IV. Lamp data sheets 32
35-Watt 52-Volt S76 HPS lamp 33
50-Watt 52-Volt S68 HPS lamp 36
70-Watt 52-Volt S62 HPS lamp 39
100-Watt 55-Volt S54 HPS lamp 42
150-Watt 55-Volt S55 HPS lamp 45
150-Watt 100-Volt S56 HPS lamp 48
200-Watt 100-Volt S66 HPS lamp 51
250-Watt 100-Volt S50 HPS lamp 54
310-Watt 100-Volt S67 HPS lamp 57
400-Watt 100-Volt S51 HPS lamp 60
430-Watt 116-Volt S145 HPS lamp 63
1000-Watt 250-Volt S52 HPS lamp 66

Copyright © 2004 by American National Standard Lighting Group – NEMA

Copyright National Electrical Manufacturers Association
Provided by IHS under license with NEMA
No reproduction or networking permitted without license from IHS
Not for Resale

Organization of this standard

This standard has been arranged in four parts:

Part I covers general requirements and information. It provides normative references and offers brief explanations of the meaning or the application of some of the numerical data given on the individual lamp data sheets in Part IV of this standard. It also provides requirements that are common to all high-pressure sodium (HPS) lamp types.

Part II contains three appendices which provide a) a method for determining trapezoidal diagrams, b) a method for determining dropout voltages, and c) a cross-reference list of the old ANSI C78.1350-series of standards.

Part III contains the maximum outline drawings of each lamp size.

Part IV contains individual lamp data sheets which provide the specific lamp, ballast, and luminaire requirements of each HPS lamp type.

Copyright © 2004 by American National Standard Lighting Group – NEMA

Copyright National Electrical Manufacturers Association
Provided by IHS under license with NEMA
No reproduction or networking permitted without license from IHS
Not for Resale

Foreword (This foreword is not part of American National Standard C78.42-2004).

Suggestions for improvement of this standard should be submitted to the Secretariat C78 American National Standard Lighting Group of the National Electrical Manufacturers Association, 1300 North 17th Street, Suite 1847, Rosslyn, VA 22209.

This standard was processed and approved by the Accredited Standards Committee on Electric Lamps, C78, and its Working Group C78 WG 04. Working Group approval of the standard does not necessarily imply that all working group members voted for that approval.

Editor's Note: During the final review, editorial changes were made to select sections of this published document only, and not to the working base document.

Amendment / Change	CDV	RV
Revision	CDV 78(04)/4188	RV 78(04)/4189

David Mullen, Chair, ASC 78
Randolph N. Roy, Committee Secretariat
Matthew Clark, Coordinating Editor

Copyright © 2004 by American National Standard Lighting Group – NEMA

Copyright National Electrical Manufacturers Association
Provided by IHS under license with NEMA
No reproduction or networking permitted without license from IHS
Not for Resale

I. General requirements and information

1. Scope

This standard sets forth the physical and electrical requirements for HPS lamps, to ensure performance and interchangeability. The data given also provide the basis for the electrical requirements for ballasts and ignitors, as well as the lamp-related requirements for luminaires. This standard covers only single-ended HPS lamps. Lamps with internal starting devices are not covered. This standard does include "improved color" HPS lamps (those lamps that have a color rendering index ≥ 60 and that operate on the same ballasts as the conventional lamps that they are intended to replace). However, color is not a standardized parameter. Luminous flux is not a standardized parameter either. This standard covers only 60 Hz operation of HPS lamps, on ballasts designed for HPS lamps.

2. Normative references

The following standards contain provisions which, through reference in this text, constitute provisions of this American National Standard. At the time of publication, the editions indicated were valid. All standards are subject to revision, and parties to agreements based on this American National Standard are encouraged to investigate the possibility of applying the most recent editions of the standards indicated below.

ANSI C78.30-1997, *Procedure for use in preparation of lamp space drawings*
ANSI C78.379-1994, *Incandescent and high-intensity-discharge reflector lamps - classification of beam patterns*
ANSI C78.380-2002, *Electric lamps - High-intensity discharge lamps - Method of designation*
ANSI C78.389-2004, *Electric lamps - High-intensity discharge lamps - Methods of measuring characteristics*
ANSI C79.1-2002, *Nomenclature for glass bulbs intended for use with electric lamps*
ANSI C81.61-2003, *Electric lamp bases*
ANSI C81.62-2003, *Lampholders for electric lamps*
ANSI C81.63-2004, *Gauges for electric lamp bases and lampholders*
ANSI C81.64-1993, *Guidelines and general information for electric lamp bases and lampholders*
ANSI C82.4-2002, *Ballasts for high-intensity discharge and low-pressure sodium lamps (multiple supply type)*
ANSI C82.5-1990, *Reference ballasts for high-intensity discharge lamps*
ANSI C82.6-1985, *Ballasts for high-intensity discharge lamps - Methods of measurement*
ANSI C82.9-1996, *Definitions for high-intensity discharge and low-pressure sodium lamps, ballasts, and transformers*
ANSI/IEC C78.62035-2002, *Discharge lamps (excluding fluorescent lamps) – Safety specifications*
UL 496-2000, Edison-base lampholders

3. Definitions

Definitions of HPS lamp terms used in this standard can be found in ANSI C82.9.

4. Methods of measurement

Measurement of the electrical characteristics and the bulb and base temperatures of HPS lamps shall be made in accordance with ANSI C78.389. Measurement of the electrical characteristics of high-intensity discharge lamp ballasts shall be made in accordance with ANSI C82.6.

Copyright © 2004 by American National Standard Lighting Group – NEMA

Copyright National Electrical Manufacturers Association
Provided by IHS under license with NEMA
No reproduction or networking permitted without license from IHS
Not for Resale

5. Lamp specifications

5.1 Lamp designations and descriptions

5.1.1 Lamp designations

High pressure sodium lamp designations used within this standard are assigned in accordance with ANSI C78.380. Note that the number (two or three digits) following the first letter in the designation (S for high pressure sodium), indicates a unique set of electrical characteristics. After the number is a slash followed by a luminaire characteristic letter. Single-ended high-pressure sodium lamps are typically permitted for use in open luminaires and have a luminaire characteristic code of “O”. Markings on high-pressure sodium lamps only need to include the first two parts of the code, e.g. S68. Alternatively, some manufacturers may choose to include the luminaire characteristic, e.g. S68/O.
Consult ANSI C78.380 for additional details and information on other optional characteristic codes.

5.1.2 Bulb designations

Bulb designations are defined in ANSI C79.1. Due to the long- term use of the conventional method of designation, its use will continue in this standard with the metric designation in parenthesis. In Part IV of this standard, an "E" bulb designation includes E-, ED-, and ET-bulb shapes; similarly, a "B" bulb designation includes B-, BD-, and BT-bulb shapes.

Note that the bulb sizes listed on the lamp data sheets of Part IV are intended to correspond with the common sizes listed in ANSI C79.1. The "nominal bulb diameter" shown on the lamp data sheets indicates the nominal dimension in SI units with the English equivalent in parentheses. The bulb designation may not correspond directly with the actual nominal dimension.

5.1.3 Base specifications

Requirements for screw-shell-type bases are specified in ANSI C81.61.

5.2 Lamp physical and safety characteristics

5.2.1 Physical and dimensional requirements

Lamps shall satisfy the requirements on the relevant lamp data sheet of Part IV. The critical lamp dimensions are given in SI units, with the English unit equivalent in parentheses.

The values of the four key physical characteristics (bulb, base, MOL, and LCL) define a two-letter physical code (e.g., “ZL” corresponds to a B17 bulb, E26/24 base, MOL of 138 mm, and LCL of 87 mm). Consult ANSI C78.380 for details. The two letter physical codes used within this standard are not required to be marked on the lamp.

5.2.2 Temperature requirements

The maximum temperature limits for the lamp bulb and base are specified on each lamp data sheet. The luminaire design must be such that these maximum temperatures are not exceeded at any point on the bulb or base. Consult ANSI C78.389 for details.

5.2.3 Maximum outline drawings

The maximum outline drawings in Part III of this standard show for each bulb-base-MOL category the maximum limits of the space that may be occupied by any part of the bulb, assuming a fixed base position. They do not define the actual bulb shape. The limits shown take into account the maximum bulb dimensions and the possible eccentricity of the bulb with respect to the base. The dashed lines indicate typical bulb shapes. A lamp with its base in a fixed position shall remain within the limits of the outline in the relevant maximum outline drawing. Maximum outline drawings are produced in accordance with C78.30.

Copyright © 2004 by American National Standard Lighting Group – NEMA

Copyright National Electrical Manufacturers Association
Provided by IHS under license with NEMA
No reproduction or networking permitted without license from IHS
Not for Resale

5.2.4 Other safety requirements and information

Other requirements and information related to safety for High Pressure Sodium lamps can be found in ANSI/IEC C78.62035

5.3 Reference ballast requirements

A reference ballast provides a standard means of comparison and is used to ensure reproducible results when measuring lamp characteristics. Reference ballasts for HPS lamps are series reactor types, and do not include any step-up transformation. Only reference ballasts for 60 Hz operation, with a power factor of 0.075 ± 0.005, shall be used.

The specific values for each reference ballast type are given on the relevant lamp data sheet of Part IV. The general requirements for reference ballasts are outlined in ANSI C82.5.

5.4 Operating requirements at 100 hours

The following lamp operating characteristics, along with those given on the relevant lamp data sheet of Part IV, apply to bare lamps operating on a reference ballast, vertically base up, unless restricted otherwise, in an ambient temperature of 25 ºC ± 5 ºC (77 ºF ± 9 ºF). These requirements apply to new lamps that have operated for 100 hours.

The set of operating characteristics given under "Measured on a reference ballast at rated input voltage" shows the preferred data, because it more closely indicates the range that would be obtained when the lamps are burned on a commercial ballast.

The set of operating characteristics given under "Measured on a reference ballast at nominal lamp wattage" shows the equivalent range of voltage and the nominal current that would be obtained if the lamps were operated at their nominal wattage levels. This situation is achieved by adjusting the input voltage of the reference ballast.

5.5 Lamp starting requirements

Lamps shall start in an ambient temperature of 25 ºC ± 5 ºC (77 ºF ± 9ºF), within the time period and under the test conditions specified below and on the relevant lamp data sheet of Part IV. Lamps shall meet these requirements throughout their lifetime. [Note: HPS lamp starting and warm-up characteristics are not expected to change with temperature, down to -40 ºC (-40 ºF).]

Lamps shall be conditioned and tested in accordance with the starting voltage measurement procedures of ANSI C78.389.

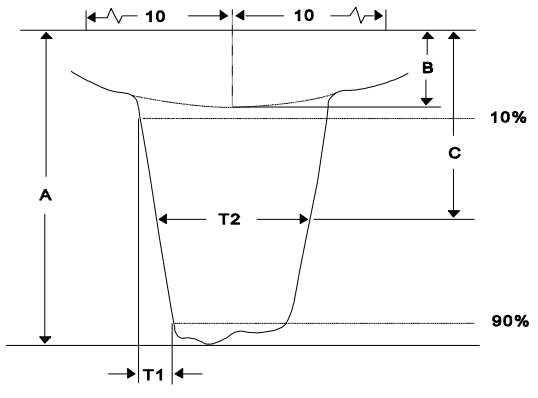

Figure 1

The starting pulse shall have the following open-circuit characteristics, as measured at the terminals of the lamp holder. The *pulse shape* shall be a square wave as defined in Figure 1. The *rise time T1* is the time interval between the instantaneous amplitudes of 10% and 90%, from the separation from the open circuit voltage, of the peak pulse amplitude. The *pulse width T2* is the time interval across the pulse at *C* (50% of *A*). The *pulse height A* shall be measured from the zero voltage level of the supply voltage, with a simulated lamp-load of 20 pF across the lampholder terminals. The *repetition rate* of the pulse shall be once per cycle. The *pulse position* on the sinusoidal voltage waveform shall be within ± 10 electrical degrees of *B* (the peak of

Copyright © 2004 by American National Standard Lighting Group – NEMA

Copyright National Electrical Manufacturers Association
Provided by IHS under license with NEMA
No reproduction or networking permitted without license from IHS
Not for Resale

the open-circuit voltage waveform). The *pulse direction* shall be in phase with the negative half cycle of the supply voltage. The *pulse application* shall be to the center eyelet terminal of the lamp base with the shell grounded.

5.6 Warm-up time

A bare lamp operating in still air at an ambient temperature of 25 ºC ± 5 ºC (77 ºF ± 9 ºF) shall reach the minimum voltage within the time period specified on the relevant lamp data sheet of Part IV. The lamp shall be operating in a horizontal position most adverse for warm-up, unless otherwise designated by the lamp manufacturer, on its specified reference ballast at the input voltage specified for this test. A lamp shall meet these requirements throughout its life. Preparation of lamps for warm-up tests shall be in accordance with ANSI C78.389.

6. Information for ballast design

A ballast shall meet the following requirements throughout its supply voltage range (the range shall not be less than 95% to 105% of its rated voltage). These requirements apply to integral-to-luminaire as well as remotely connected ballasts and HID starters (that is, ignitors). Capacitive loading across the lampholder terminals may be necessary to simulate remote mounting circuit characteristics. For additional ballast requirements see ANSI C82.4.

6.1 Starting voltage requirements

A ballast shall meet the following general starting voltage specifications along with those given on the relevant lamp data sheet of Part IV, in order to reliably start and sustain lamps at ambient temperatures of -40 ºC (-40 ºF) and above.

The starting pulse application shall be to the eyelet or center lampholder terminal with the wiring between ballast and lampholder (or its equivalent capacitance) connected.

The starting pulse measurement shall be at the lampholder terminals with a simulated lamp-load of 20 pF across the terminals. The pulse height shall be measured from the zero voltage level of the supply voltage. The minimum pulse repetition rate shall be once per cycle for lag circuit ballasts and once per half cycle for lead circuit ballasts.

The pulse position for lag circuit ballasts shall be (1) during the time that the open-circuit voltage exceeds 90% of its peak and (2) no later than 20 electrical degrees beyond the center of the half cycle (that is, 110 degrees or 290 degrees, or both).

The pulse position for lead circuit ballasts shall be (1) during the time that the open-circuit voltage exceeds 90% of its peak and (2) no later than 15 electrical degrees beyond the center of the half cycle (that is, 105 degrees and 285 degrees).

6.2 Lamp starting current

Starting current shall be measured 5 to 15 seconds after the lamp arc has struck. Minimum and maximum starting currents are given on the relevant lamp data sheet of Part IV.

6.3 Current off time

Low-current off time (time that the instantaneous current at the end of each half cycle is below 1.0 amperes) is given on the relevant lamp data sheet of Part IV.

6.4 Current crest factor

The maximum current crest factor during warm-up and operation, is given on the relevant lamp data sheet of Part IV.

Copyright © 2004 by American National Standard Lighting Group – NEMA

Copyright National Electrical Manufacturers Association
Provided by IHS under license with NEMA
No reproduction or networking permitted without license from IHS Not for Resale

6.5 Maximum peak voltage (across lamp terminals)

The peak voltage across the lamp terminals shall not exceed at any time the value given on the relevant lamp data sheet of Part IV.

6.6 Lamp operating limits

Throughout the lifetime of the lamp, the ballast shall operate the lamp within the lamp voltage and wattage limits specified by the trapezoidal (quadrilateral) diagram on the relevant lamp data sheet in Part IV, under the additional conditions of 6.6.1 through 6.6.3. For a detailed explanation of the trapezoidal diagram, see Appendix A in Part II.

6.6.1 Range of supply voltages

The lamp operating limits shall be maintained throughout the range of supply voltages for which the ballast is rated.

6.6.2 Ballast characteristic curve

The trapezoidal diagram on each lamp data sheet shows a typical ballast characteristic curve such that the lamp wattage attains a maximum at or before the maximum lamp voltage line and then decreases substantially as the lamp voltage increases beyond that point. Such a curve for a common lag ballast is preferred.

6.6.3 Maximum lamp voltage line

A ballast shall be capable of operating a lamp beyond the maximum lamp voltage line at the right-hand side of the trapezoid.

7. Information for luminaire design

7.1 Lamp voltage rise limits

The lamp voltage of reference lamps, operating on a sinusoidal power supply of 60 Hz with the specified reference ballast at its rated input voltage, shall not increase more than the value given on the relevant lamp data sheet of Part IV, when going from stabilized bare lamp operation to stabilized operation in a luminaire.

7.2 Lamp temperatures

Luminaire design shall be such that the maximum lamp temperatures given in the physical characteristics section of the relevant lamp data sheet of Part IV are not exceeded.

7.3 Lamp operating position

A luminaire shall maintain the lamp within its allowable operating position limits.

Copyright © 2004 by American National Standard Lighting Group – NEMA

Copyright National Electrical Manufacturers Association
Provided by IHS under license with NEMA
No reproduction or networking permitted without license from IHS
Not for Resale

II. Annexes

Copyright © 2004 by American National Standard Lighting Group – NEMA

Copyright National Electrical Manufacturers Association
Provided by IHS under license with NEMA
No reproduction or networking permitted without license from IHS
Not for Resale

Annex A: A guide for determining trapezoidal (quadrilateral) diagrams for HPS lamps (Informative)

A.1 Introduction

In a lighting system employing high-pressure sodium (HPS) lamps there are several variables that affect performance. In addition to normal production variations in both lamp voltage and ballast impedance, other factors must be accounted for, such as line voltage variations, changes in lamp characteristics with time, and a luminaire effect due to radiant energy reflected back to the arc tube. This dynamic system is more easily understood when presented in the form of a lamp parameter boundary picture which includes all variables. This boundary picture, which is called a trapezoidal diagram, is a plot of lamp operating wattage versus lamp operating voltage.

This guide defines certain technical terms, describes the basis for determining the various sides of a trapezoid and gives an interpretation of the final diagram. It should be noted that some trapezoidal diagrams developed earlier may not be compatible with these guidelines.

Established trapezoidal diagrams for each lamp system are shown on the lamp data sheets in Part IV. Definitions of additional terms may be found in ANSI C82.9.

Note: Recently a new type of HPS lamp has been introduced that contains a much smaller dose of sodium and mercury than previous lamp types. This new lamp type is sometimes referred to as an "unsaturated" lamp, because essentially all the sodium and mercury dosed into the arc tube is in the vapor phase under standard operating conditions. By contrast, the previous designs of HPS lamp types (sometimes referred to as "saturated" lamps) contain an overdose of sodium and mercury, and most of the amalgam is in the liquid phase under standard operating conditions. Unsaturated lamp types have little or no lamp voltage rise over life, while saturated lamp types do exhibit this phenomenon, as described below. The following discussion refers to saturated lamp types.

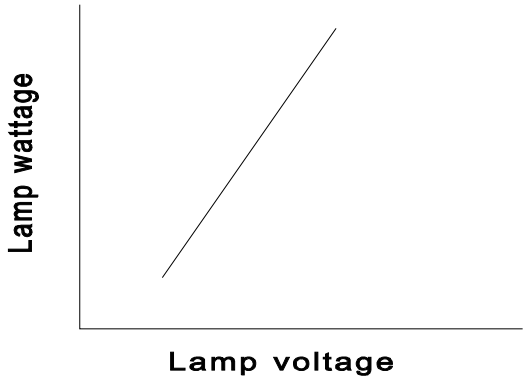

Figure A 1

A.2 The lamp characteristic curve

An HPS lamp exhibits substantial arc or lamp voltage changes. This can be contrasted to a mercury lamp where lamp voltage remains relatively constant when lamp wattage changes. This relationship between lamp voltage (arc voltage) and wattage is due to the fact that the HPS arc tube contains an excess of sodium-mercury amalgam. During lamp operation nearly all the sodium-mercury amalgam is in the liquid amalgam phase and is located at the cold spot of the arc tube. Only a small fraction of the sodium and mercury is actually in the vapor phase. The vapor pressure, and therefore the lamp voltage, depends on the cold spot temperature which is a function of lamp wattage, reflected energy and ambient temperature within the optical assembly. The relationship between wattage and voltage is approximately linear in the region of interest around the nominal wattage. This nearly straight line relationship shown in Figure A1 is called the lamp characteristic curve. The lamp characteristic curve for a particular lamp may be obtained by varying the wattage, either by changing the line voltage or the ballast impedance over a range.

The point at which a lamp's characteristic curve crosses the line of nominal wattage defines the characteristic voltage of that lamp. A design center lamp is a lamp whose characteristic voltage is at the nominal voltage value.

Copyright © 2004 by American National Standard Lighting Group – NEMA

Copyright National Electrical Manufacturers Association
Provided by IHS under license with NEMA
No reproduction or networking permitted without license from IHS
Not for Resale

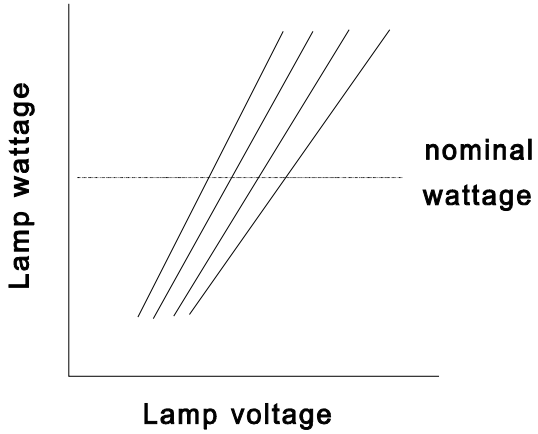

A group of lamps of the same wattage rating and slightly different characteristic voltages will have nearly parallel curves as shown in Figure A2. The slopes of these curves will be less steep for lamps of progressively higher characteristic voltages. As a lamp ages, its characteristic voltage rises.

Figure A2

A.3 The ballast characteristic curve

When an HPS lamp operates on a ballast connected to a constant input voltage, changes in the lamp's operating voltage and wattage follow the ballast characteristic curve. Figure A3 shows two typical ballast characteristic curves.

These curves are obtained by measuring the wattage and voltage of lamps with different characteristic voltages or by measuring a single lamp whose voltage is made to vary by externally causing the cold spot temperature of the arc tube to rise.

A family of ballast characteristic curves will be generated when the supply voltage is varied. Figure A4 shows this effect at rated input voltage and ±5% of rated input voltage.

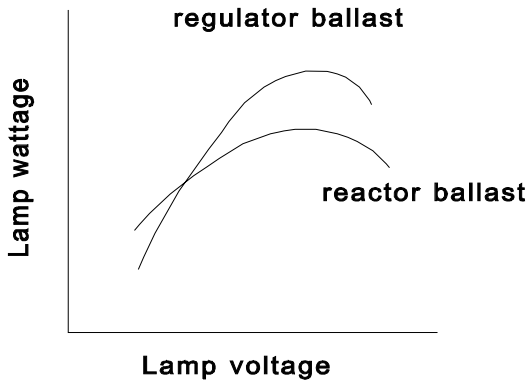

Figure A3

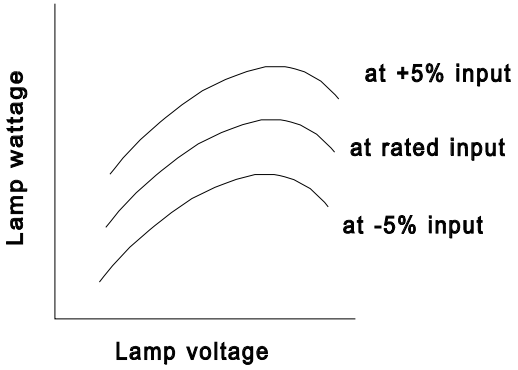

Figure A4

A.4 Lamp wattage limits

A.4.1 The maximum wattage limit

The top line of the trapezoidal (quadrilateral) diagram represents the maximum wattage limit of the high-pressure sodium lamp (see Figure A5). The maximum wattage line is determined by the maximum permissible operating temperature of the arc tube. If a lamp is operated at or above this value, reduced lamp life will result. The maximum wattage line is usually placed approximately 20 to 30% above the nominal wattage. The actual limit varies by lamp type because the optimum wall loading of some arc tubes may be altered to accommodate other lamp design requirements.

An additional requirement for the location of the maximum wattage line is that it must lie above the ballast characteristic curve produced by a reference ballast operating at 105% of its rated input voltage. This allowance takes into account manufacturing and design tolerances for commercial ballasts.

Copyright © 2004 by American National Standard Lighting Group – NEMA

Copyright National Electrical Manufacturers Association
Provided by IHS under license with NEMA
No reproduction or networking permitted without license from IHS
Not for Resale

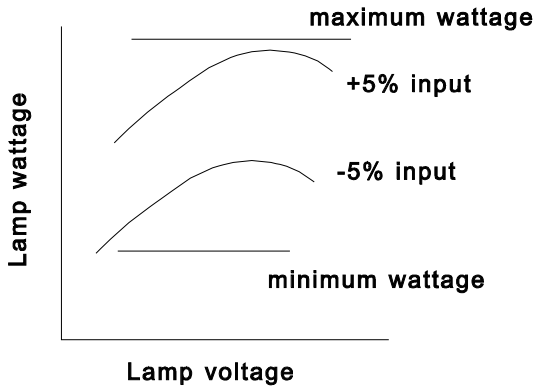

Figure A5

A.4.2 The minimum wattage limit

The minimum wattage limit is set to insure proper lamp operation in terms of (see Figure A5):

a. satisfactory lamp warm-up time characteristics,
b. acceptable system lumen output,
c. acceptable color rendition and uniformity,
d. acceptable lamp operating stability.

This limit line is placed approximately 20 to 30% below the nominal wattage and must be below the ballast characteristic curve and within the maximum and minimum lamp characteristic curves. The allowance below the reference ballast curve at 95% of its rated input voltage takes into account manufacturing and design tolerances for commercial ballasts. Figure A5 shows the maximum and minimum wattage lines and their relationship to the ballast characteristic curves.

A.5 Lamp voltage limits

A.5.1 The minimum voltage line

The minimum voltage line is that lamp characteristic curve of the lamp with the minimum acceptable characteristic voltage. The minimum characteristic voltage for a specific lamp type is specified on the relevant lamp data sheet of Part IV. It lies to the left of the design center and establishes the left-hand side of the trapezoid.

The characteristic curves of ballasts must intersect the minimum voltage line. Keeping them within the lower left-hand corner of the trapezoid is difficult, particularly with regulated (lead circuit) types of ballasts.

A.5.2 The maximum voltage line

The maximum voltage line defines the right-hand side of the trapezoidal (quadrilateral) diagram. It is determined by taking several factors into consideration. These factors are:
a. the highest acceptable characteristic voltage of a new lamp,
b. the rise in lamp voltage that takes place during life,
c. the increase in lamp voltage resulting from enclosure in a luminaire,
d. a locus of lamp dropout voltages that occur on a reference ballast.

The maximum characteristic voltage is derived from the locus of the dropout voltages. The locus of the dropout voltages is obtained using a number of input voltages as described in Appendix B. The dropout characteristic voltage value is then reduced by an amount equal to 20% of the nominal lamp voltage and measured back along the nominal wattage line. This termination point fixes the maximum characteristic voltage. The maximum characteristic voltage point is arrived at by an interactive process of varying input voltage and cold spot temperature until this point is achieved. From this point lamp voltages are measured for at least two other input voltages without changing the means of externally heating the cold spot. The values obtained are connected to produce the maximum lamp characteristic curve.

In ballast design the maximum voltage and wattage limits are closely related. Increasing the limit for maximum voltage necessitates an increase in the maximum wattage limit because some types of ballasts have characteristic curves that can span a greater range of voltage only if a higher wattage peak is allowed.

Copyright © 2004 by American National Standard Lighting Group – NEMA

Copyright National Electrical Manufacturers Association
Provided by IHS under license with NEMA
No reproduction or networking permitted without license from IHS
Not for Resale

A.6 Conclusions

A.6.1 Interpretation related to lamp and ballast

The finished diagram consists of maximum and minimum wattage lines, and maximum and minimum voltage lines as shown in Figure A6. The diagram can be used as a system specification because it encompasses certain requirements for both lamp and ballast while including a luminaire effect. The trapezoid for each wattage system provides ballast design information to operate lamps properly.

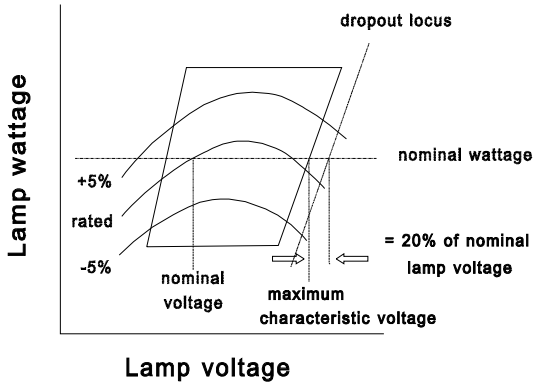

Figure A6

The foregoing trapezoid development steps have related the various limits to operation of a lamp on a reference ballast. The final diagram is based on operation of a lamp on a reference ballast at ±5% of its nominal input voltage with an additional allowance. Nevertheless, the limits of lamp operation are related to underlying physical characteristics of the lamp and, therefore, must be interpreted as relating to all commercial ballasts as well. It is apparent then that the trapezoid for a certain system defines operational limits of any lamp operated on any ballast.

The completed trapezoid describes qualifications for ballast design which can be summarized as follows:

a. The ballast characteristic curve shall intersect both lamp voltage limit lines and remain between the wattage limit lines throughout the lifetime of a lamp, per 6.6 (Part I).

b. The lamp shall operate within the trapezoid, not only at the rated input voltage of the ballast, but also at the lowest and highest input voltages for which the ballast is rated, per 6.6.1 (Part I). Note: Since a lag ballast is similar to a reference ballast, it cannot be expected to operate the system satisfactorily on supply lines which vary beyond the ± 5% range.

c. A ballast characteristic curve is preferred such that the lamp wattage attains a maximum at or before the maximum lamp voltage line and then decreases substantially as the lamp voltage increases beyond this point. A relatively flat ballast characteristic curve located near the line of rated lamp wattage is preferable to one which rises and falls relatively steeply.

d. To avoid instability, premature dropout, and decreased lamp life, the ballast must be capable of operating the lamp beyond the maximum lamp voltage line at the right-hand side of the trapezoid.

Although not defined by the trapezoid, a lamp-ballast system must also withstand the extinction voltage test as described in ANSI C82.4.

A.6.2 Interpretation related to luminaire design

The allowance of lamp voltage rise assigned to the luminaire effect is not readily visible on the finished trapezoid. The permissible voltage rise value is listed on the individual lamp data sheets in Part IV.

Copyright © 2004 by American National Standard Lighting Group – NEMA

Copyright National Electrical Manufacturers Association
Provided by IHS under license with NEMA
No reproduction or networking permitted without license from IHS
Not for Resale

Annex B: HPS lamp dropout voltage test procedure (informative)

B.1 Introduction

The following procedure may be used to measure dropout voltages of HPS lamps. Experience has shown that this kind of measurement is difficult to make and the consistency of results is affected by several factors.

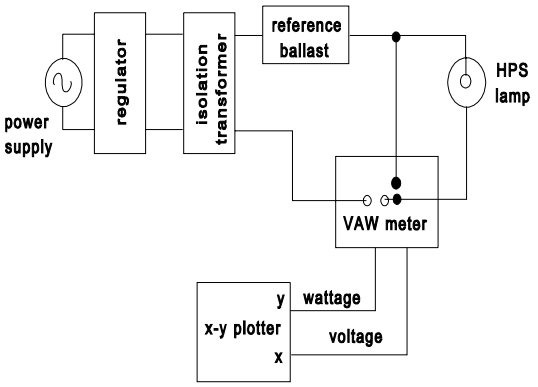

Figure B1

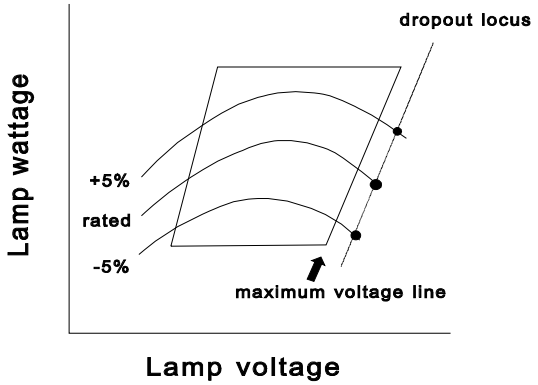

Figure B2

Speculation has been made that the wide variety of results reported at the international level is due to variations in experimental setup and procedure. It is anticipated that the use of one common method will permit the comparison of data from different sources. The procedure contained herein is recommended as that common method.

B.2 Theory

Operating limits of an HPS lamp are defined by a trapezoidal (quadrilateral) diagram, such as Figure B2. The purpose of the subject procedure is to obtain data from lamps that will help to establish the maximum voltage line at the right-hand side of the diagram.

Typically, the voltage of an HPS lamp increases through life. At some point in time a critical voltage is reached where the ballast will not be able to sustain the lamp. This voltage is called the dropout voltage and it is a function of both lamp and ballast operating characteristics. In order to avoid differences in ballast operating characteristics due to design and manufacturing variations, a reference ballast is used in this procedure to determine the dropout voltage of a test lamp.

This procedure for measuring dropout points involves burning a test lamp on a reference ballast and artificially raising the lamp voltage until the dropout point is reached. The lamp voltage is related to the amalgam temperature and can be increased by raising the temperature of the amalgam cold spot area. This heating can be accomplished by using either an external source of radiant heat or by redirecting some of the test lamp's radiation back onto itself. A metal cylinder lowered over the lamp or other artificial methods provide a convenient and controllable means of reflecting energy from the lamp back onto the arc tube within the lamp. Clear lamps are recommended for this test work. Coated lamps diffuse this radiant energy and complicate the experiment. Therefore, they should be avoided.

In some designs a reservoir, external to the arc tube, serves as the amalgam cold spot. In lamps without an external reservoir, one or both ends of the arc tube can serve as the cold spot. When the end of the arc tube that has the cold spot is artificially heated, an equivalent or greater amount of heat must be supplied to the opposite end of the arc tube. This can be accomplished artificially by placing a metal cylinder or aluminum foil over the opposite end of the lamp.

As the cold spot end is heated by the artificial means, the lamp voltage and wattage are generally recorded on an X-Y recorder. As the lamp voltage rises, the ballast curve (for particular line voltage used) is traced out by the recorder. The dropout point appears on this recorded trace. It can be identified as the place where the trace changes its slope. See Figure B3.

Copyright © 2004 by American National Standard Lighting Group – NEMA

Copyright National Electrical Manufacturers Association
Provided by IHS under license with NEMA
No reproduction or networking permitted without license from IHS
Not for Resale

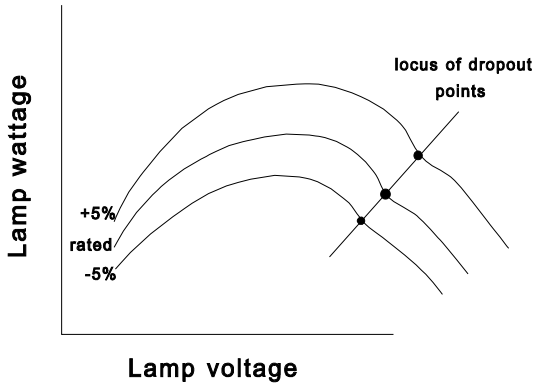

Figure B3

B.3 Methods of artificial heating

There are four commonly used methods of artificially heating the lamp's arc tube. These are listed below in order of preference.

B.3.1 Metal sleeve

The inside diameter (ID) of the metal sleeve should be only slightly larger than the outside diameter of the test lamp. Aluminum foil can be used to cover the inside surface of the sleeve to increase its reflectivity. An adjustable, mechanical drive to control sleeve movement is advantageous but not absolutely necessary.

After the test lamp has been started and reached its normal operation point, the sleeve is to be positioned over the lamp from the end opposite to the cold spot. The rate of increasing coverage of the lamp is limited by equilibrium (see section B.4). As the expected dropout point is approached, the coverage rate must be slowed down.

B.3.2 Metal sleeve and projection lamp

When method B.3.1 does not drive the test lamp to dropout, externally generated heat must be applied also. An incandescent, ellipsoidal-mirror-type projection lamp should be used. It is necessary to be able to focus the projection lamp's light output on the test lamp's cold spot. The projection lamp is to be controlled by means of an adjustable auto-transformer.

In this method, the metal sleeve is stopped at a position where the cold spot end is still exposed. Then the (pre-aimed) projection lamp's output is slowly increased to heat up the cold spot.

B.3.3 Foil and projection lamp method

A piece of pre-shaped aluminum foil is fitted over the lamp end opposite to the cold spot. The foil should extend only to the length of the arc tube. The lamp is started with this shaped foil section removed. After reaching the normal lamp operating point, the foil is placed on the lamp. After the lamp reaches another stable point, the external heat is applied to the cold spot from the projection lamp.

B.3.4 The two-projection lamp method

In this method the output on one projection lamp is focused on the end of the arc tube opposite the cold spot, the second lamp is aimed at the cold spot end. After the test lamp is started and reaches its normal operating point, the first projection lamp is turned on and its output increased slowly. As the expected dropout is neared, the second lamp is turned on and its output increased slowly.

B.4 Description of equilibrium

The lamp voltage must be increased at a low enough rate to keep the lamp-ballast system near equilibrium. If the lamp voltage is increased at too high a rate, an incorrect ballast curve and dropout point will be recorded (see Figure B4). Two tests can be used to determine if the lamp-ballast system is near equilibrium:

Copyright © 2004 by American National Standard Lighting Group – NEMA

Copyright National Electrical Manufacturers Association
Provided by IHS under license with NEMA
No reproduction or networking permitted without license from IHS
Not for Resale

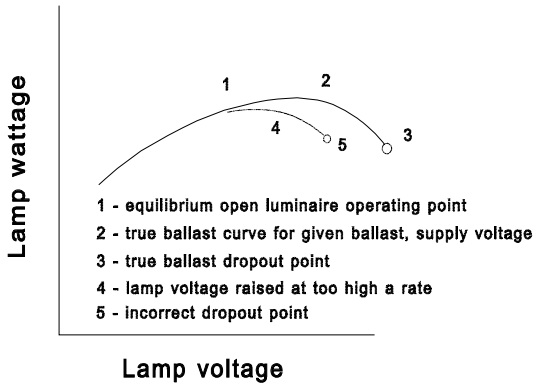

Figure B4

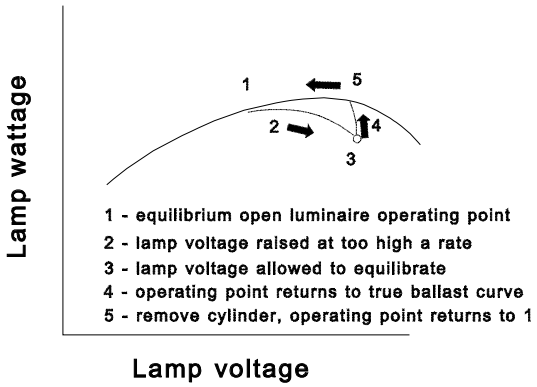

Figure B5

a. After the lamp voltage has been raised by an amount of 5 to 10 V, the cylinder position (or external light source intensity) should be fixed and the lamp voltage-wattage monitored. If the system is in equilibrium, the operating point will either remain constant or will move along the ballast curve. If the voltage has been raised at too high a rate, the lamp wattage will increase after the cylinder position is fixed and the operating point will then move up to the true ballast curve (see Figure B5).

b. The second test is to remove the cylinder after the lamp voltage has been raised 10 V or more. The true ballast curve will then be retraced as the lamp returns to its normal operating voltage. If the two curves overlap, the lamp-ballast system is in equilibrium. This is the easier of the two tests to use.

B.5 Equipment (see equipment notes also)

Voltage regulator or line conditioner
Reference ballast
X-Y recorder
Digital VAW-meter with outputs that convert rms voltage and wattage to dc
Lampholder and wiring
Aluminum foil
Cylindrical, metal sleeve (with mechanical control of position as an option)
Test lamps, clear bulb
Tesla coil or external ignitor
Incandescent, ellipsoidal reflector projection lamp and voltage control

B.5.1 Equipment notes

The voltage regulator must be capable of holding the supply voltage to within ±0.5% variation. This is an important aspect of this experiment. The supply voltage waveform must be sinusoidal (C82.6). Some sort of line conditioning may be necessary to obtain the desired shape.

Various kinds of digital VAW-meters with dc analog outputs are commercially available. Separate voltmeters and wattmeters may also be used. Other true rms voltage and wattage converters may be used provided that the output is checked for linearity and that the impedance limitations for HPS lamp measurements are adhered to. As far as the measurement of the rise of the lamp voltage is concerned, there is an additional requirement that the speed of response of the measuring systems should be at least equal to the rate of change in voltage and wattage. Devices with a very long settling time would not be suitable.

Use of the Tesla coil to start test lamps is the preferred method. An external ignitor is satisfactory, but its use involves special cautionary steps to avoid damage to other equipment.

Copyright © 2004 by American National Standard Lighting Group – NEMA

Copyright National Electrical Manufacturers Association
Provided by IHS under license with NEMA
No reproduction or networking permitted without license from IHS
Not for Resale

A particular test lamp should not be re-tested in a new operating position without first going through a re-stabilizing period (C78.388). New test lamps should be operated 100 hours at normal conditions before use.

B.6 Procedure

1. Assemble the necessary equipment and connect the components in the test circuit (see Figure B1).

2. Pre-set position of metal sleeve, foil, and/or projection lamp(s) as required, according to the method of artificial heating to be used.

3. Energize the test circuit and apply rated input voltage to the reference ballast. Commence recording and let the test lamp reach its normal operating point before introducing artificial heating.

   Caution: Disconnect the various voltmeter connections during starting to protect against breakdown of electronic components due to high voltage pulse.

   Caution: If an ignitor is used, disconnect it after starting so that it does not attempt to re-start after the dropout point. This could damage the meter.

4. Start the appropriate means of artificial heating as required. Watch for a steady rise in lamp voltage and maintain equilibrium. If the first method does not drive the lamp voltage high enough to cause dropout, use another method.

5. Repeat steps 3 and 4, using a new lamp each time, for +5% and -5% of rated input voltage.

B.7 Report

For each particular lamp type, three volts-watts points will have been determined at the completion of the experimental procedure. There is a separate point for each different input voltage run. These three data points should be reported so that a locus of dropout voltages as shown in Figure B2 can be drawn.

Copyright © 2004 by American National Standard Lighting Group – NEMA

Copyright National Electrical Manufacturers Association
Provided by IHS under license with NEMA
No reproduction or networking permitted without license from IHS
Not for Resale

Annex C: Former ANSI C78.1350-series standards (Informative)

Lamp type	Former ANSI standard
35-Watt S76	C78.1358-1988
50-Watt S68	C78.1359-1988
70-Watt S62	C78.1353-1990
100-Watt S54	C78.1354-1990
150-Watt S55	C78.1355-1989
150-Watt S56	C78.1356-1988
200-Watt S66	C78.1357-1991
250-Watt S50	C78.1351-1989
310-Watt S67	C78.1360-1990
400-Watt S51	C78.1350-1990
1000-Watt S52	C78.1352-1990

Copyright © 2004 by American National Standard Lighting Group – NEMA

Copyright National Electrical Manufacturers Association
Provided by IHS under license with NEMA
No reproduction or networking permitted without license from IHS
Not for Resale

III. Maximum outline drawings

Copyright © 2004 by American National Standard Lighting Group – NEMA

Copyright National Electrical Manufacturers Association
Provided by IHS under license with NEMA
No reproduction or networking permitted without license from IHS
Not for Resale

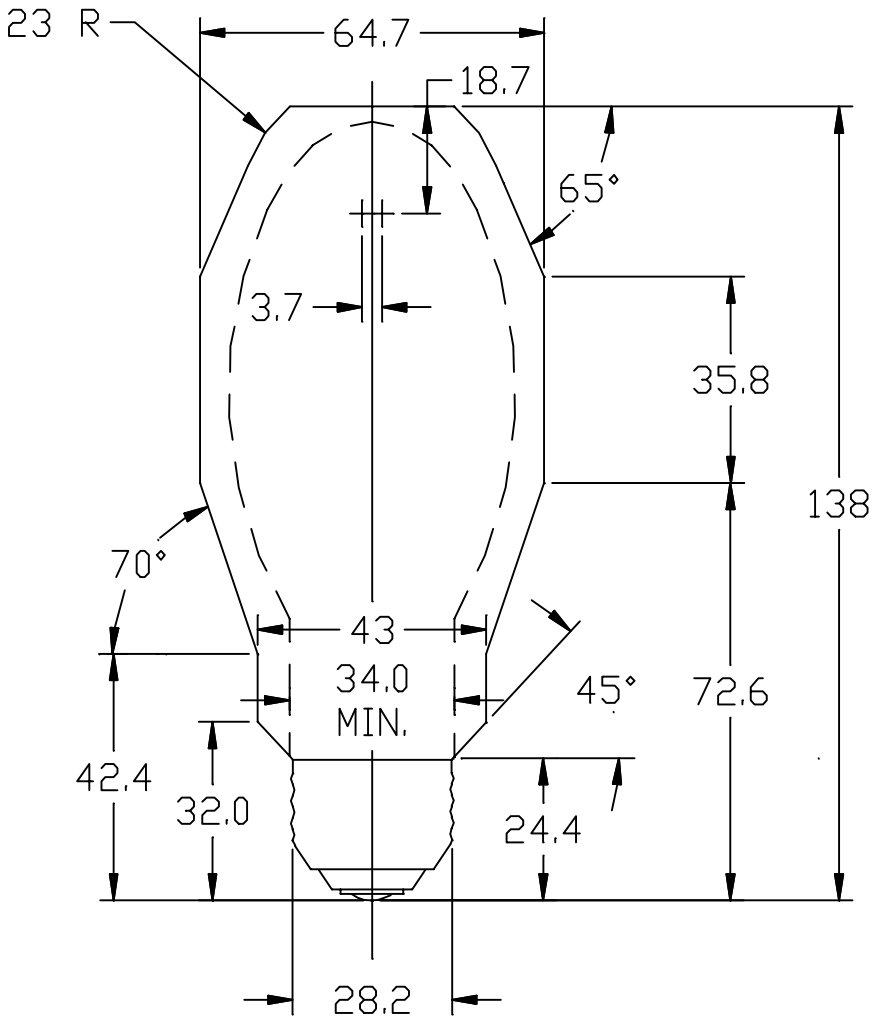

Drawing 42-10 (all dimensions in mm)

Bulb B17 (B54), E17 (E54)
Base ..... E26/24 medium screw
Maximum overall length (MOL) ..... 138 mm
Minimum overall length ..... 128 mm
Eccentricity .....3°

Copyright National Electrical Manufacturers Association
Provided by IHS under license with NEMA
No reproduction or networking permitted without license from IHS
Not for Resale

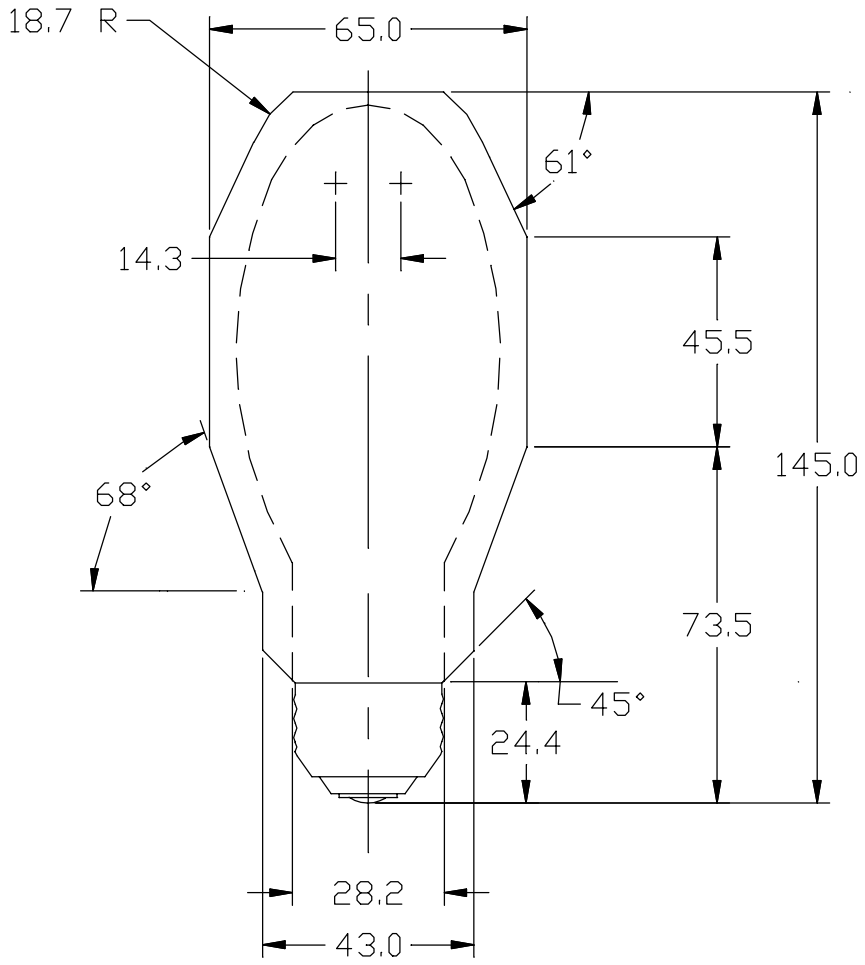

Drawing 42-20 (all dimensions in mm)

Bulb B17 (B54), E17 (E54)
Base ..... E26/24 medium screw
Maximum overall length (MOL) ..... 145 mm
Minimum overall length ..... 135 mm
Eccentricity .....3°

Copyright National Electrical Manufacturers Association
Provided by IHS under license with NEMA
No reproduction or networking permitted without license from IHS
Not for Resale

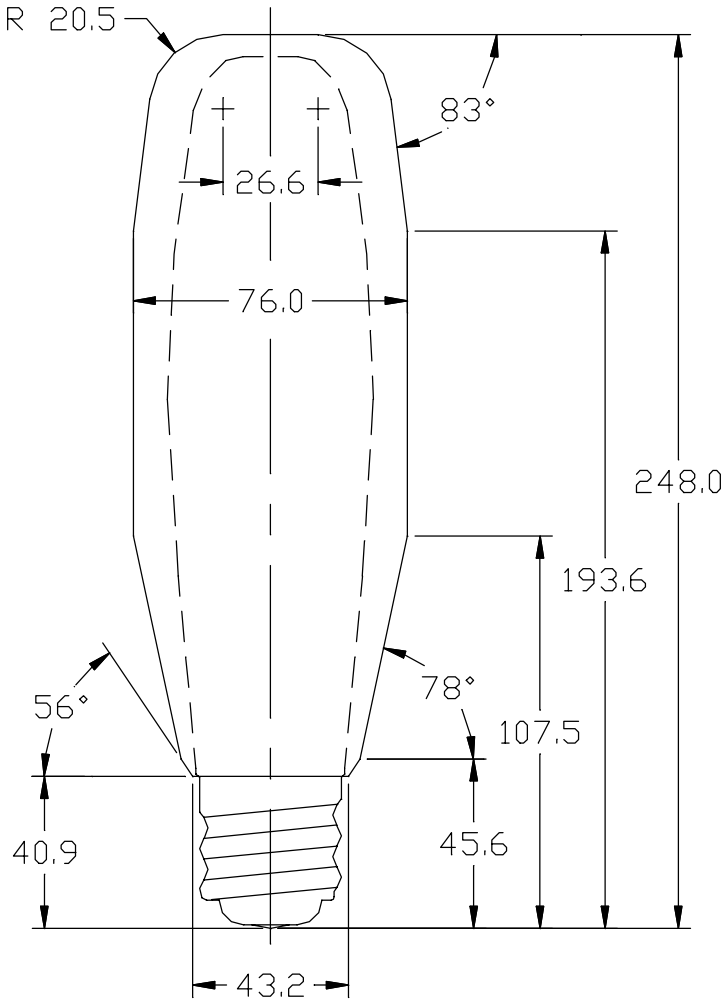

Drawing 42-30 (all dimensions in mm)

Bulb E18 (E57)
Base ..... E39 mogul screw
Maximum overall length (MOL) ..... 248 mm
Minimum overall length ..... 238 mm
Eccentricity ..... 3°

Copyright National Electrical Manufacturers Association
Provided by IHS under license with NEMA
No reproduction or networking permitted without license from IHS
Not for Resale

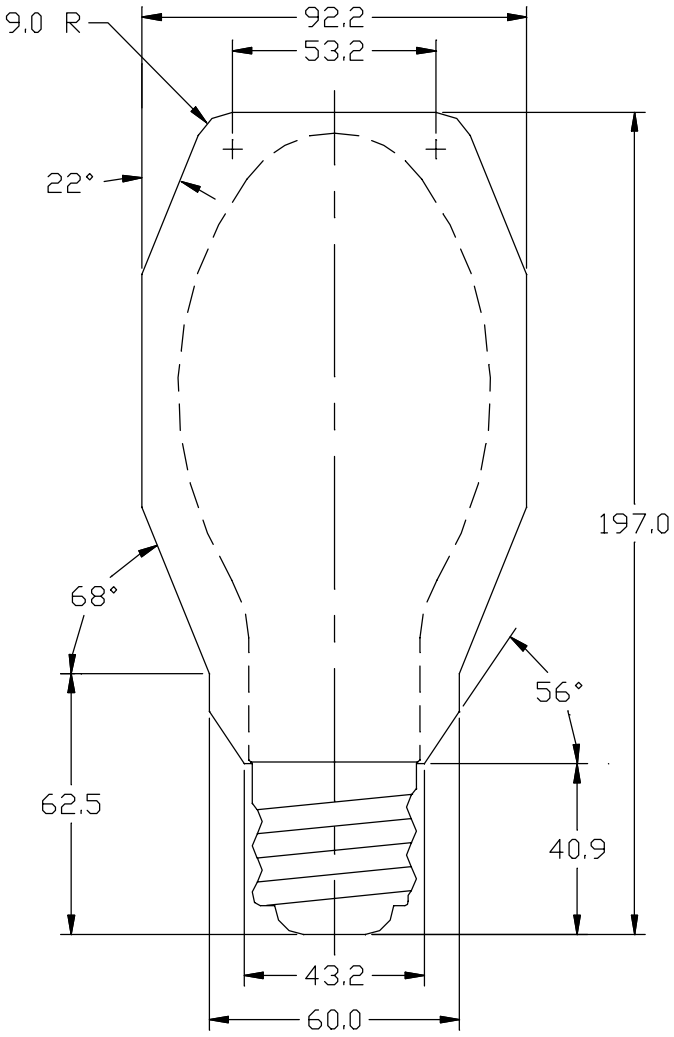

Drawing 42-40 (all dimensions in mm)

Bulb B25 (B80), E23.5 (E75)
Base ..... E39 mogul screw
Maximum overall length (MOL) ..... 197 mm
Minimum overall length ..... 187 mm
Eccentricity .....3°

Copyright © 2004 by American National Standard Lighting Group – NEMA

Copyright National Electrical Manufacturers Association
Provided by IHS under license with NEMA
No reproduction or networking permitted without license from IHS
Not for Resale

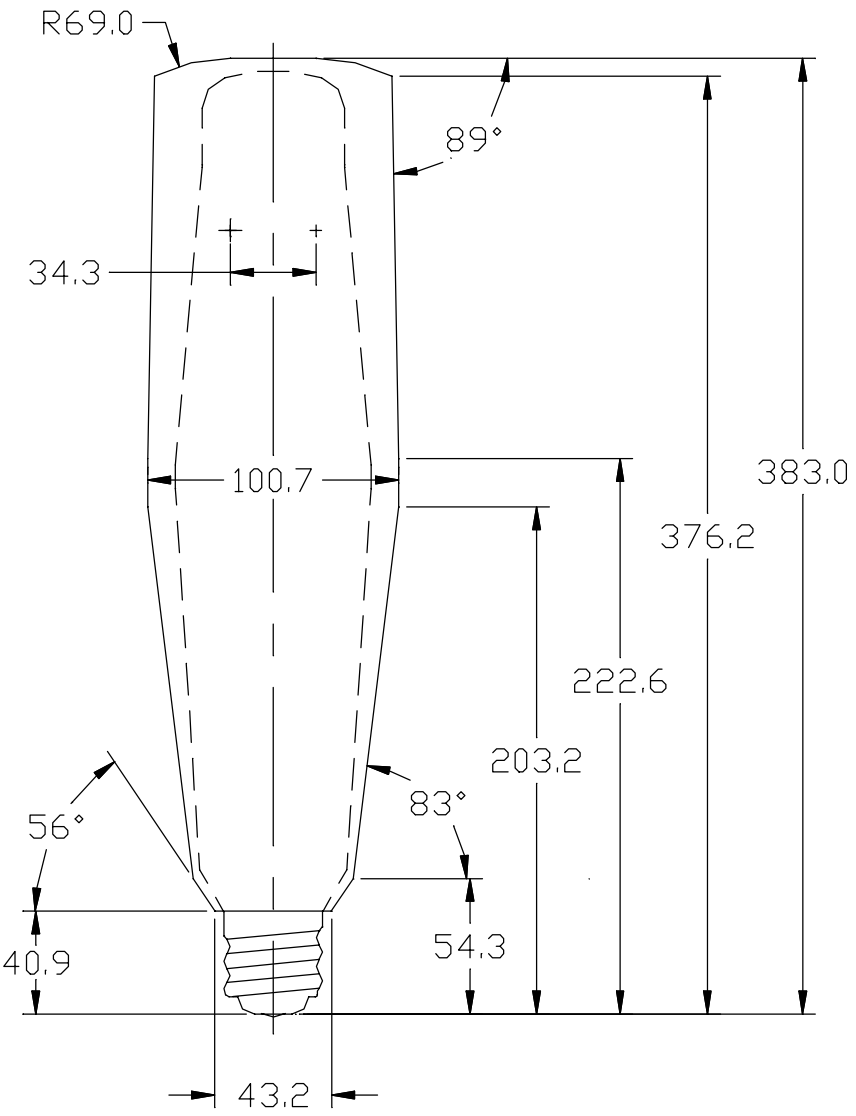

Drawing 42-50 (all dimensions in mm)

Bulb E25 (E78)
Base ..... E39 mogul screw
Maximum overall length (MOL) ..... 383 mm
Minimum overall length ..... 373 mm
Eccentricity ..... 3°

Copyright National Electrical Manufacturers Association
Provided by IHS under license with NEMA
No reproduction or networking permitted without license from IHS
Not for Resale

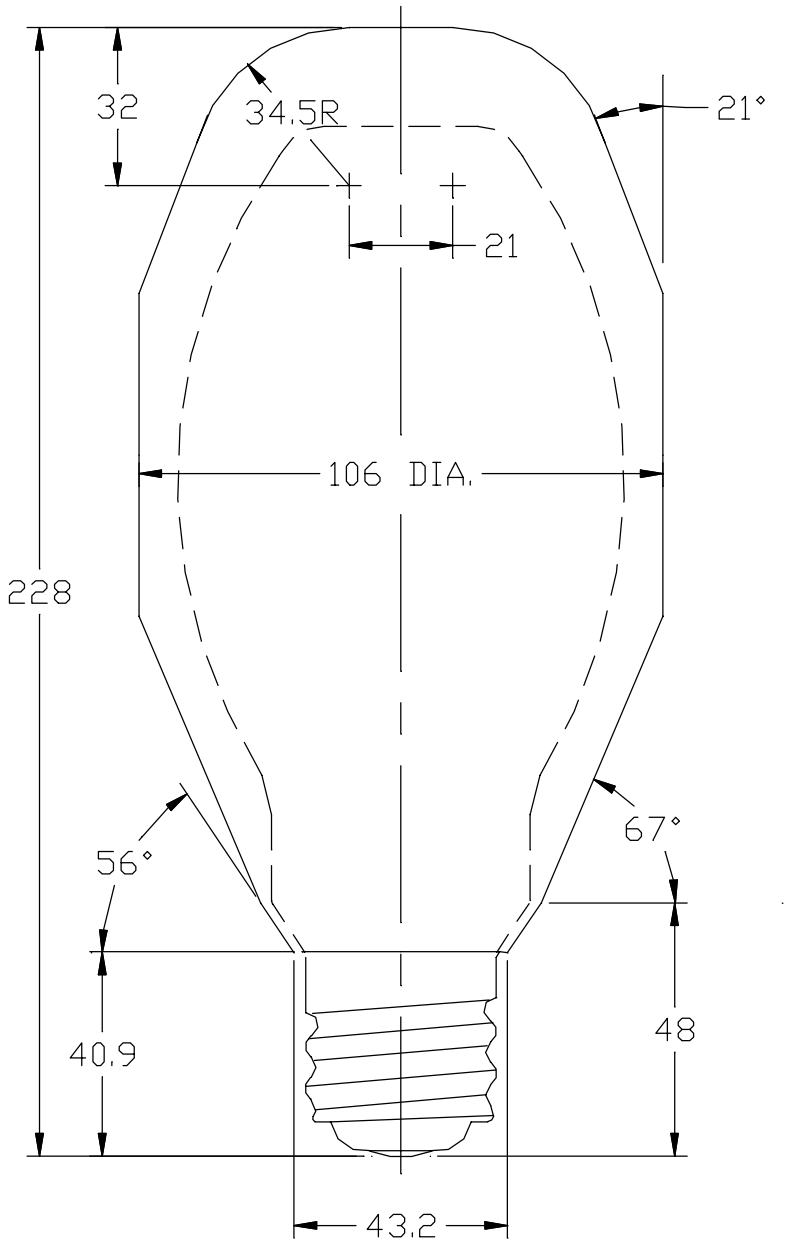

Drawing 42-60 (all dimensions in mm)

Bulb B28 (B90), E28 (E90)
Base ..... E39 mogul screw
Maximum overall length (MOL) .....228 mm
Minimum overall length .....218 mm
Eccentricity .....3°

Copyright National Electrical Manufacturers Association
Provided by IHS under license with NEMA
No reproduction or networking permitted without license from IHS
Not for Resale

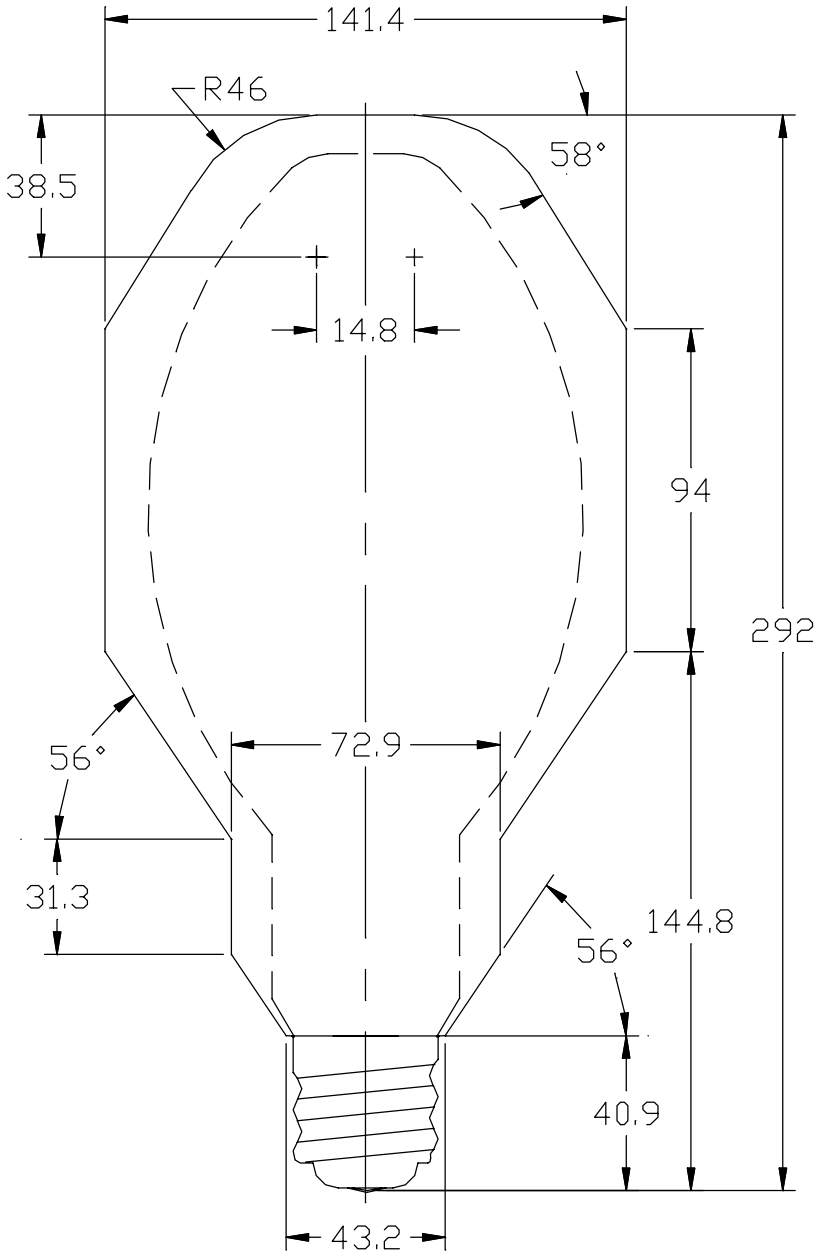

Drawing 42-70 (all dimensions in mm)

Bulb B37 (B118), E37 (E118)
Base ..... E39 mogul screw
Maximum overall length (MOL) .....292 mm
Minimum overall length .....282 mm
Eccentricity .....3°

Copyright National Electrical Manufacturers Association
Provided by IHS under license with NEMA
No reproduction or networking permitted without license from IHS Not for Resale

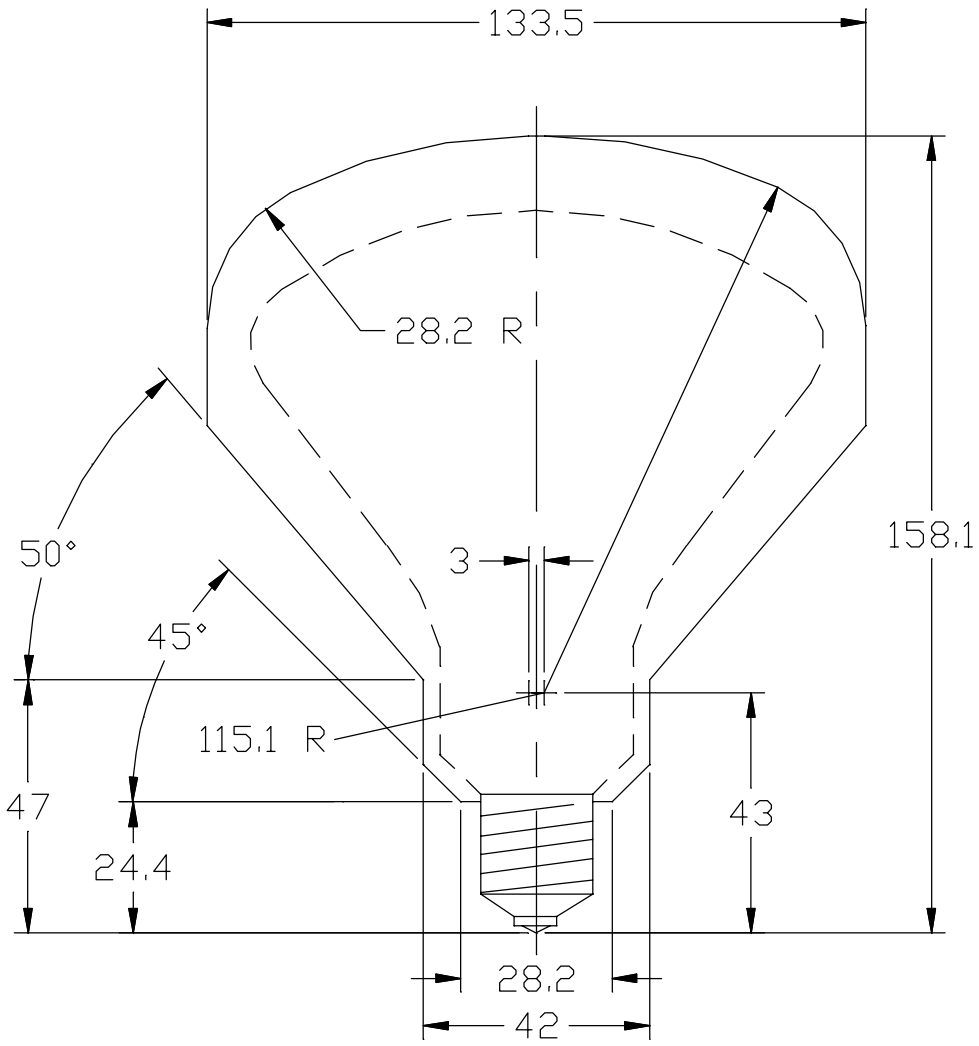

Drawing 42-80 (all dimensions in mm)

Bulb RL38 (RL121)
Base ..... E26/24 medium screw
Maximum overall length (MOL) ..... 158.1 mm
Minimum overall length ..... 148 mm
Eccentricity .....3°

Copyright National Electrical Manufacturers Association
Provided by IHS under license with NEMA
No reproduction or networking permitted without license from IHS
Not for Resale

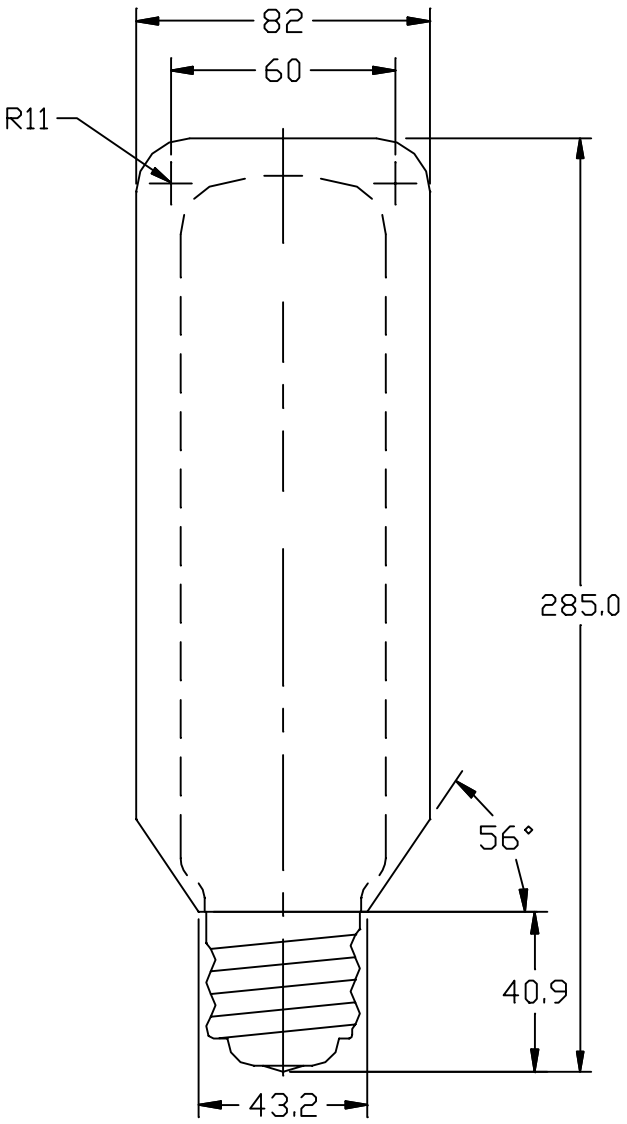

Drawing 42-90 (all dimensions in mm)

Bulb	T15 (E48)
Base	E39 mogul screw
Maximum overall length (MOL)	285 mm
Minimum overall length	275 mm
Eccentricity	3°

Copyright © 2004 by American National Standard Lighting Group – NEMA

Copyright National Electrical Manufacturers Association
Provided by IHS under license with NEMA
No reproduction or networking permitted without license from IHS
Not for Resale

IV. Lamp data sheets

Copyright © 2004 by American National Standard Lighting Group – NEMA

Copyright National Electrical Manufacturers Association
Provided by IHS under license with NEMA
No reproduction or networking permitted without license from IHS
Not for Resale

35-Watt 52-Volt S76 HPS lamp

1. Lamp specifications

1.1 Lamp designations and descriptions (refer to 5.1 (Part I))

Designation	Bulb	Base
S76/O-ZL	B17 (B54) or E17 (E54)	E26/24 medium screw

1.2 Lamp physical and safety characteristics (refer to 5.2 (Part I))

	S76/O-ZL
Bulb	B17 (B54) or E17 (E54)
Base	E26/24 medium screw
Nominal diameter [1]	54 (2.13)
Maximum overall length (MOL) [1]	138 (5.43)
Light center length (LCL) [1]	87 ± 5 (3.42 ± 0.20)
Arc length [1]	20 ± 4 (0.80 ± 0.16)
Maximum electrode tip deviation [2]	3
Maximum permissible bulb temperature [3]	400 (752)
Maximum permissible base temperature [3]	190 (374)
Operating position limitation	None, unless indicated by lamp marking
Maximum outline drawing	Drawing 42-10

[1] Dimensions are in mm, with equivalent inches within parentheses
[2] Maximum electrode tip deviation is from base axis (apex at base eyelet), measured in degrees; for single arc tube lamp only
[3] Temperatures are in ºC, with equivalent ºF within parentheses

Copyright © 2004 by American National Standard Lighting Group – NEMA

Copyright National Electrical Manufacturers Association
Provided by IHS under license with NEMA
No reproduction or networking permitted without license from IHS
Not for Resale

1.3 Reference ballast requirements (refer to 5.3 (Part I))

Rated input voltage ..... 120 V
Reference current ..... 0.83 A
Impedance ..... 116.5 Ω

1.4 Operating requirements at 100 hours (conditions of 5.4 (Part I) apply)

	Measured on a reference ballast at rated input voltage +			Measured on a reference ballast at nominal lamp wattage		
	Min	Nom	Max	Min	Nom	Max
Voltage at lamp terminals (V, rms)	44	52	64	46	52	62
Lamp current (A, rms)		0.83			0.83	
Lamp wattage (W)		35		35	35	35

+ preferred data

1.5 Starting requirements (conditions of 5.5 (Part I) apply)

Starting time, max ..... 5 s
Input voltage to reference ballast ..... 110 V
Pulse height ..... 2225 V ± 25 V
Pulse rise time, max ..... 100 ns
Pulse width ..... 0.95 μs ± 0.05 μs

1.6 Warm-up time (conditions of 5.6 (Part I) apply)

Warm-up time ..... 5 min
Lamp voltage, min ..... 26 V
Input voltage to reference ballast ..... 110 V

2. Information for ballast design

2.1 Starting voltage requirements (conditions of 6.1 (Part I) apply)

Minimum rms open circuit voltage, lag circuit ballast ..... 110 V
Pulse height ..... 2500 - 4000 V
Pulse width, min ..... 1 μs at 2250 V

2.2 Starting current (conditions of 6.2 (Part I) apply)

Minimum starting current, rms ..... 0.83 A
Maximum starting current, rms ..... 1.25 A

2.3 Current off time (refer to 6.3 (Part I))

Not applicable.

Copyright © 2004 by American National Standard Lighting Group – NEMA

Copyright National Electrical Manufacturers Association
Provided by IHS under license with NEMA
No reproduction or networking permitted without license from IHS
Not for Resale

2.4 Current crest factor (refer to 6.4 (Part I))

1.8 maximum, during warm-up and operation.

2.5 Maximum peak voltage (across lamp terminals) (refer to 6.5 (Part I))

4000 V at any time.

2.6 Lamp operating limits (conditions of 6.6 (Part I) apply)

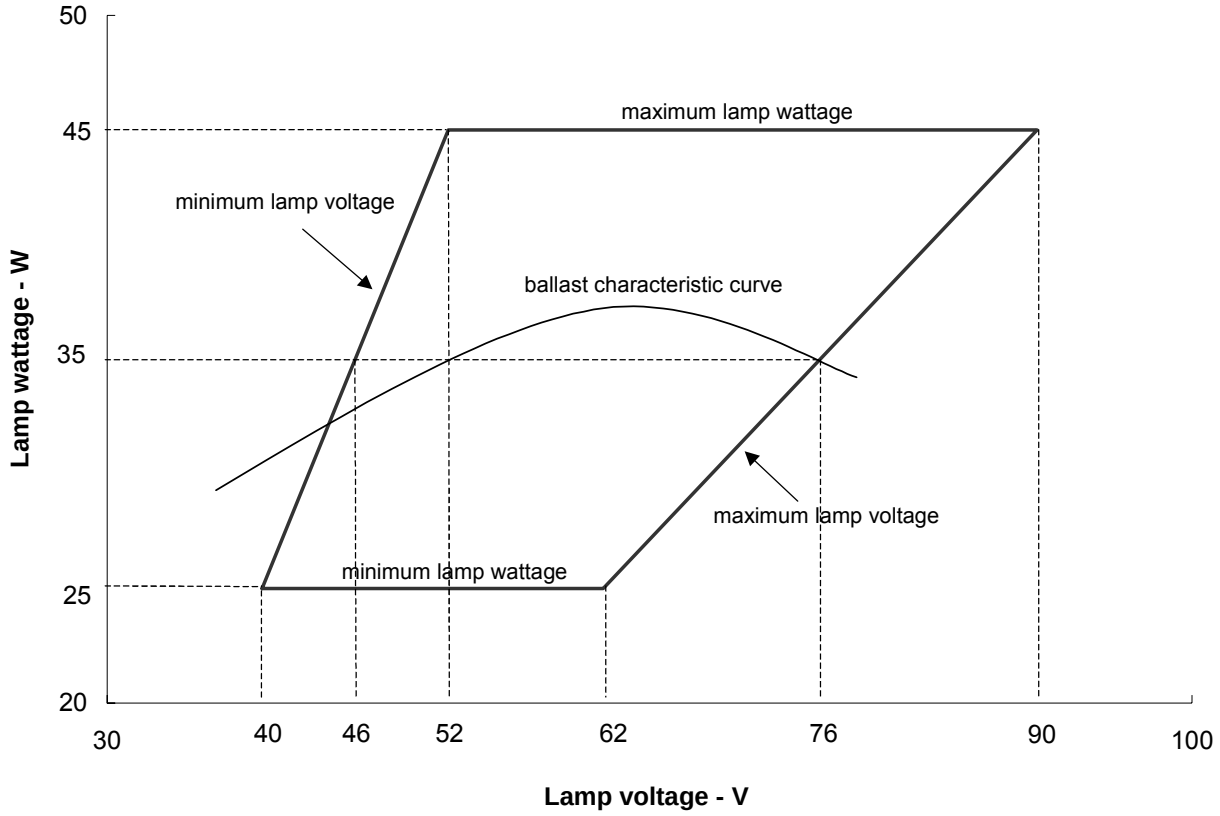

3. Information for luminaire design (conditions of 7 (Part I) apply)

3.1 Lamp voltage rise limits

Maximum voltage rise .....4 V

Copyright © 2004 by American National Standard Lighting Group – NEMA

Copyright National Electrical Manufacturers Association
Provided by IHS under license with NEMA
No reproduction or networking permitted without license from IHS
Not for Resale

50-Watt 52-Volt S68 HPS lamp

1. Lamp specifications

1.1 Lamp designations and descriptions (refer to 5.1 (Part I))

Designation	Bulb	Base
S68/O-ZL	B17 (B54) or E17 (E54)	E26/24 medium screw
S68/O-NV	B25 (B80) or E23.5 (E75)	E39 mogul screw

1.2 Lamp physical and safety characteristics (refer to 5.2 (Part I))

	S68/O-ZL	*S68/O-NV*
Bulb	B17 (B54) or E17 (E54)	B25 (B80) or E23.5 (E75)
Base	E26/24 medium screw	E39 mogul screw
Nominal diameter [1]	54 (2.13)	B25 bulb: 79.4 (3.13) E23.5 bulb: 74.6 (2.94)
Maximum overall length (MOL) [1]	138 (5.43)	197 (7.75)
Light center length (LCL) [1]	87 ± 5 (3.42 ± 0.20)	127 ± 3 (5.0 ± 0.12)
Arc length [1]	20 ± 4 (0.80 ± 0.16)	20 ± 4 (0.80 ± 0.16)
Maximum electrode tip deviation [2]	3	3
Maximum permissible bulb temperature [3]	400 (752)	400 (752)
Maximum permissible base temperature [3]	190 (374)	210 (410)
Operating position limitation	None, unless indicated by lamp marking	None, unless indicated by lamp marking
Maximum outline drawing	Drawing 42-10	Drawing 42-40

[1] Dimensions are in mm, with equivalent inches within parentheses
[2] Maximum electrode tip deviation is from base axis (apex at base eyelet), measured in degrees; for single arc tube lamp only
[3] Temperatures are in ºC, with equivalent ºF within parentheses

Copyright © 2004 by American National Standard Lighting Group – NEMA

Copyright National Electrical Manufacturers Association
Provided by IHS under license with NEMA
No reproduction or networking permitted without license from IHS
Not for Resale

1.3 Reference ballast requirements (refer to 5.3 (Part I))

Rated input voltage ..... 120 V
Reference current ..... 1.18 A
Impedance ..... 83.1 Ω

1.4 Operating requirements at 100 hours (conditions of 5.4 (Part I) apply)

	Measured on a reference ballast at rated input voltage +			Measured on a reference ballast at nominal lamp wattage		
	Min	Nom	Max	Min	Nom	Max
Voltage at lamp terminals (V, rms)	42	52	65	46	52	62
Lamp current (A, rms)		1.18			1.18	
Lamp wattage (W)		50		50	50	50

+ preferred data

1.5 Starting requirements (conditions of 5.5 (Part I) apply)

Starting time, max ..... 5 s
Input voltage to reference ballast ..... 110 V
Pulse height ..... 2225 V ± 25 V
Pulse rise time, max ..... 100 ns
Pulse width ..... 0.95 μs ± 0.05 μs

1.6 Warm-up time (conditions of 5.6 (Part I) apply)

Warm-up time ..... 5 min
Lamp voltage, min ..... 26 V
Input voltage to reference ballast ..... 110 V

2. Information for ballast design

2.1 Starting voltage requirements (conditions of 6.1 (Part I) apply)

Minimum rms open circuit voltage, lag circuit ballast ..... 110 V
Pulse height ..... 2500 - 4000 V
Pulse width, min ..... 1 μs at 2250 V

2.2 Starting current (conditions of 6.2 (Part I) apply)

Minimum starting current, rms ..... 1.18 A
Maximum starting current, rms ..... 1.85 A

2.3 Current off time (refer to 6.3 (Part I))

Not applicable.

Copyright © 2004 by American National Standard Lighting Group – NEMA

Copyright National Electrical Manufacturers Association
Provided by IHS under license with NEMA
No reproduction or networking permitted without license from IHS
Not for Resale

2.4 Current crest factor (refer to 6.4 (Part I))

1.8 maximum, during warm-up and operation.

2.5 Maximum peak voltage (across lamp terminals) (refer to 6.5 (Part I))

4000 V at any time.

2.6 Lamp operating limits (conditions of 6.6 (Part I) apply)

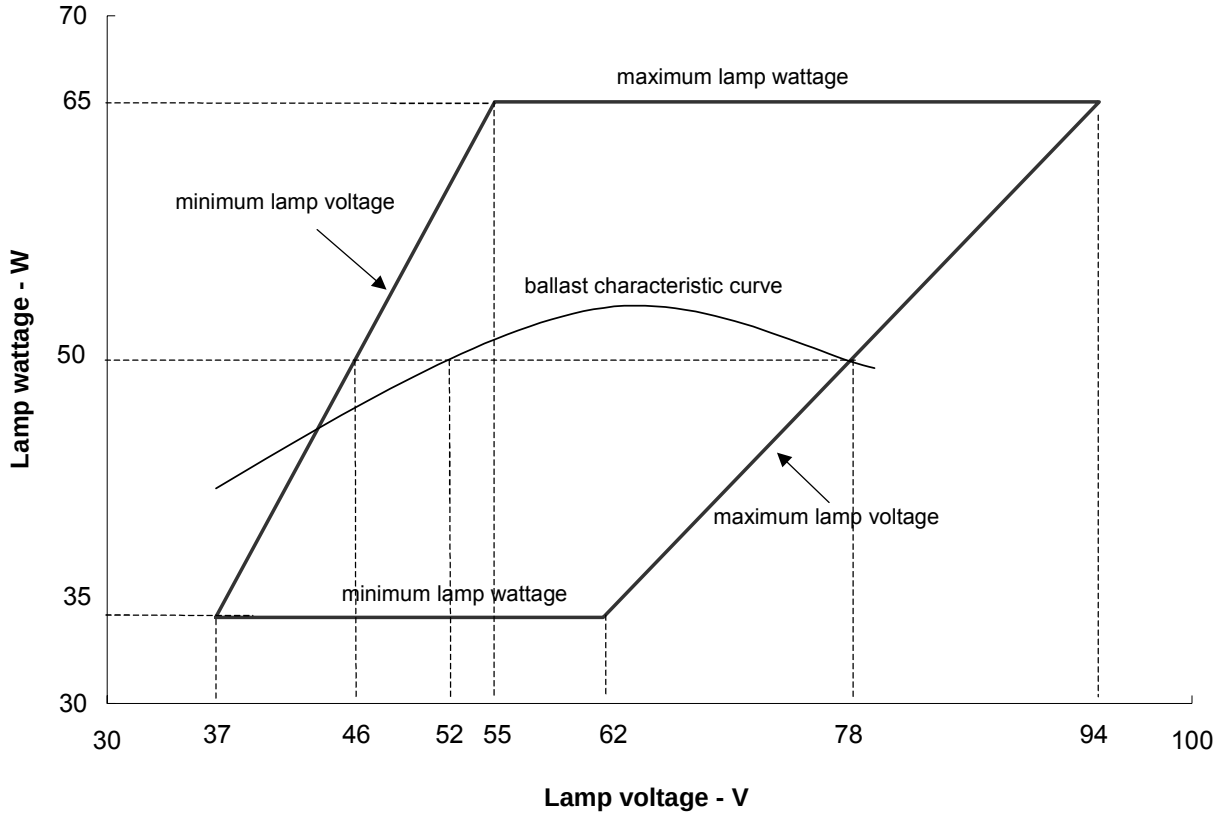

3. Information for luminaire design (conditions of 7 (Part I) apply)

3.1 Lamp voltage rise limits

Maximum voltage rise .....4 V

Copyright National Electrical Manufacturers Association
Provided by IHS under license with NEMA
No reproduction or networking permitted without license from IHS Not for Resale

70-Watt 52-Volt S62 HPS lamp

1. Lamp specifications

1.1 Lamp designations and descriptions (refer to 5.1 (Part I))

Designation	Bulb	Base
S62/O-ZL	B17 (B54) or E17 (E54)	E26/24 medium screw
S62/O-NV	B25 (B80) or E23.5 (E75)	E39 mogul screw
S62/O-SR	RL38 (RL121) inside reflector	E26/24 medium screw

1.2 Lamp physical and safety characteristics (refer to 5.2 (Part I))

	S62/O-ZL	*S62/O-NV*	*S62/O-SR*
Bulb	B17 (B54) or E17 (E54)	B25 (B80) or E23.5 (E75)	RL38 (RL121) inside reflector
Base	E26/24 medium screw	E39 mogul screw	E26/24 medium screw
Nominal diameter [1]	54 (2.13)	B25 bulb: 79.4 (3.13) E23.5 bulb: 74.6 (2.94)	121 (4.75)
Maximum overall length (MOL) [1]	138 (5.43)	197 (7.75)	158.1 (6.24)
Light center length (LCL) [1]	87 ± 5 (3.42 ± 0.20)	127 ± 3 (5.0 ± 0.12)	NA
Arc length [1]	27 ± 8 (1.06 ± 0.31)	27 ± 8 (1.06 ± 0.31)	NA
Arc length of improved color lamp [1] [4]	17 ± 4 (0.67 ± 0.16)	17 ± 4 (0.67 ± 0.16)	NA
Maximum electrode tip deviation [2]	3	3	NA
Maximum permissible bulb temperature [3]	400 (752)	400 (752)	385 (725)
Maximum permissible base temperature [3]	190 (374)	210 (410)	190 (374)
Operating position limitation	None, unless indicated by lamp marking	None, unless indicated by lamp marking	None, unless indicated by lamp marking
Maximum outline drawing	Drawing 42-10	Drawing 42-40	Drawing 42-80

[1] Dimensions are in mm, with equivalent inches within parentheses
[2] Maximum electrode tip deviation is from base axis (apex at base eyelet), measured in degrees; for single arc tube only
[3] Temperatures are in ºC, with equivalent ºF within parentheses
[4] The shorter arc length of the improved color HPS lamp may affect the candlepower distribution from a luminaire designed for a conventional HPS lamp

Copyright © 2004 by American National Standard Lighting Group – NEMA

Copyright National Electrical Manufacturers Association
Provided by IHS under license with NEMA
No reproduction or networking permitted without license from IHS
Not for Resale

1.3 Reference ballast requirements (refer to 5.3 (Part I))

Rated input voltage ..... 120 V
Reference current ..... 1.6 A
Impedance ..... 61 Ω

1.4 Operating requirements at 100 hours (conditions of 5.4 (Part I) apply)

	Measured on a reference ballast at rated input voltage +			Measured on a reference ballast at nominal lamp wattage		
	Min	Nom	Max	Min	Nom	Max
Voltage at lamp terminals (V, rms)	41	52	62	44	52	60
Lamp current (A, rms)		1.6			1.6	
Lamp wattage (W)		70		70	70	70

\+ preferred data

1.5 Starting requirements (conditions of 5.5 (Part I) apply)

Starting time, max ..... 5 s
Input voltage to reference ballast ..... 110 V
Pulse height ..... 2225 V ± 25 V
Pulse rise time, max ..... 100 ns
Pulse width ..... 0.95 μs ± 0.05 μs

1.6 Warm-up time (conditions of 5.6 (Part I) apply)

Warm-up time ..... 5 min
Lamp voltage, min ..... 26 V
Input voltage to reference ballast ..... 110 V

2. Information for ballast design

2.1 Starting voltage requirements (conditions of 6.1 (Part I) apply)

Minimum rms open circuit voltage, lag circuit ballast ..... 110 V
Pulse height ..... 2500 - 4000 V
Pulse width, min ..... 1 μs at 2250 V

2.2 Starting current (conditions of 6.2 (Part I) apply)

Minimum starting current, rms ..... 1.6 A
Maximum starting current, rms ..... 2.4 A

2.3 Current off time (refer to 6.3 (Part I))

Not applicable.

Copyright © 2004 by American National Standard Lighting Group – NEMA

Copyright National Electrical Manufacturers Association
Provided by IHS under license with NEMA
No reproduction or networking permitted without license from IHS
Not for Resale

2.4 Current crest factor (refer to 6.4 (Part I))

1.8 maximum, during warm-up and operation.

2.5 Maximum peak voltage (across lamp terminals) (refer to 6.5 (Part I))

4000 V at any time.

2.6 Lamp operating limits (conditions of 6.6 (Part I) apply)

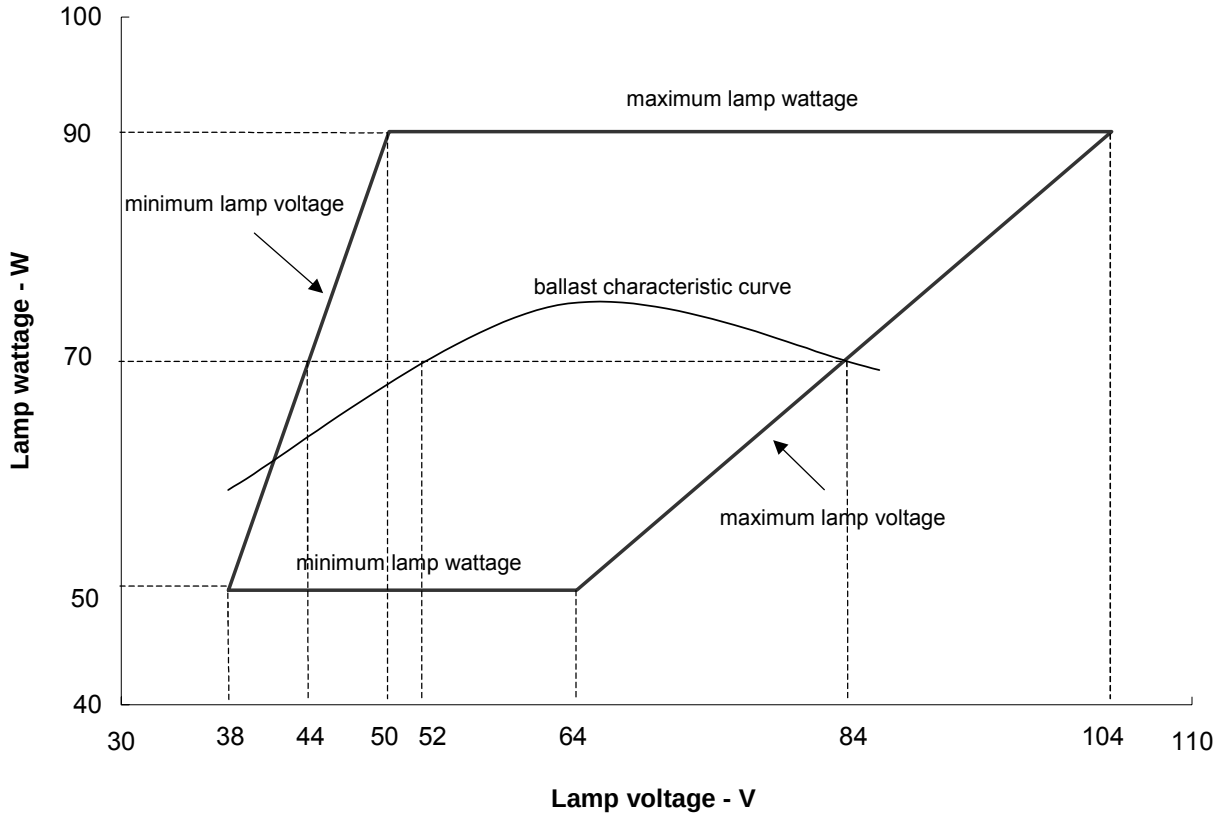

3. Information for luminaire design (conditions of 7 (Part I) apply)

3.1 Lamp voltage rise limits

Maximum voltage rise .....4 V

Copyright National Electrical Manufacturers Association
Provided by IHS under license with NEMA
No reproduction or networking permitted without license from IHS Not for Resale

100-Watt 55-Volt S54 HPS lamp

1. Lamp specifications

1.1 Lamp designations and descriptions (refer to 5.1 (Part I))

Designation	Bulb	Base
S54/O-ZL	B17 (B54) or E17 (E54)	E26/24 medium screw
S54/O-NV	B25 (B80) or E23.5 (E75)	E39 mogul screw

1.2 Lamp physical and safety characteristics (refer to 5.2 (Part I))

	S54/O-ZL	*S54O-NV*
Bulb	B17 (B54) or E17 (E54)	B25 (B80) or E23.5 (E75)
Base	E26/24 medium screw	E39 mogul screw
Nominal diameter [1]	54 (2.13)	B25 bulb: 79.4 (3.13) E23.5 bulb: 74.6 (2.94)
Maximum overall length (MOL) [1]	138 (5.43)	197 (7.75)
Light center length (LCL) [1]	89 ± 6 (3.5 ± 0.24)	127 ± 3 (5.0 ± 0.12)
Arc length [1]	36 ± 10 (1.4 ± 0.39)	36 ± 10 (1.4 ± 0.39)
Arc length of improved color lamp [1] [4]	20 ± 4 (0.79 ± 0.16)	20 ± 4 (0.79 ± 0.16)
Maximum electrode tip deviation [2]	3	3
Maximum permissible bulb temperature [3]	400 (752)	400 (752)
Maximum permissible base temperature [3]	190 (374)	210 (410)
Operating position limitation	None, unless indicated by lamp marking	None, unless indicated by lamp marking
Maximum outline drawing	Drawing 42-10	Drawing 42-40

[1] Dimensions are in mm, with equivalent inches within parentheses
[2] Maximum electrode tip deviation is from base axis (apex at base eyelet), measured in degrees; for single arc tube only
[3] Temperatures are in ºC, with equivalent ºF within parentheses
[4] The shorter arc length of the improved color HPS lamp may affect the candlepower distribution from a luminaire designed for a conventional HPS lamp

Copyright © 2004 by American National Standard Lighting Group – NEMA

Copyright National Electrical Manufacturers Association
Provided by IHS under license with NEMA
No reproduction or networking permitted without license from IHS
Not for Resale

1.3 Reference ballast requirements (refer to 5.3 (Part I))

Rated input voltage ..... 120 V
Reference current ..... 2.1 A
Impedance ..... 44 Ω

1.4 Operating requirements at 100 hours (conditions of 5.4 (Part I) apply)

	Measured on a reference ballast at rated input voltage +			Measured on a reference ballast at nominal lamp wattage		
	Min	Nom	Max	Min	Nom	Max
Voltage at lamp terminals (V, rms)	42	55	63	45	55	62
Lamp current (A, rms)		2.1			2.1	
Lamp wattage (W)		100		100	100	100

+ preferred data

1.5 Starting requirements (conditions of 5.5 (Part I) apply)

Starting time, max ..... 5 s
Input voltage to reference ballast ..... 110 V
Pulse height ..... 2225 V ± 25 V
Pulse rise time, max ..... 100 ns
Pulse width ..... 0.95 μs ± 0.05 μs

1.6 Warm-up time (conditions of 5.6 (Part I) apply)

Warm-up time ..... 5 min
Lamp voltage, min ..... 28 V
Input voltage to reference ballast ..... 110 V

2. Information for ballast design

2.1 Starting voltage requirements (conditions of 6.1 (Part I) apply)

Minimum rms open circuit voltage, lag circuit ballast ..... 110 V
Pulse height ..... 2500 - 4000 V
Pulse width, min ..... 1 μs at 2250 V

2.2 Starting current (conditions of 6.2 (Part I) apply)

Minimum starting current, rms ..... 2.1 A
Maximum starting current, rms ..... 3.2 A

2.3 Current off time (refer to 6.3 (Part I))

Not applicable.

Copyright © 2004 by American National Standard Lighting Group – NEMA

Copyright National Electrical Manufacturers Association
Provided by IHS under license with NEMA
No reproduction or networking permitted without license from IHS
Not for Resale

2.4 Current crest factor (refer to 6.4 (Part I))

1.8 maximum, during warm-up and operation.

2.5 Maximum peak voltage (across lamp terminals) (refer to 6.5 (Part I))

4000 V at any time.

2.6 Lamp operating limits (conditions of 6.6 (Part I) apply)

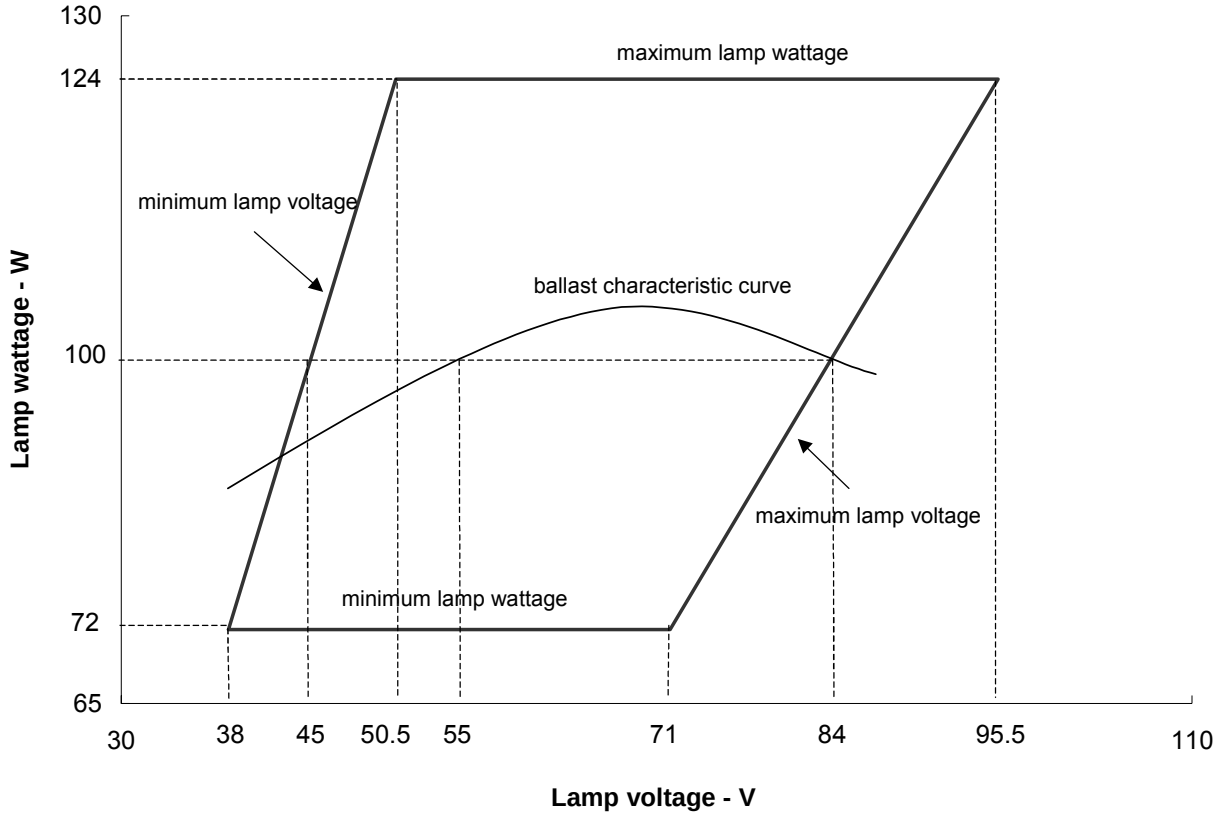

3. Information for luminaire design (conditions of 7 (Part I) apply)

3.1 Lamp voltage rise limits

Maximum voltage rise .....4 V

Copyright National Electrical Manufacturers Association
Provided by IHS under license with NEMA
No reproduction or networking permitted without license from IHS Not for Resale

150-Watt 55-Volt S55 HPS lamp

1. Lamp specifications

1.1 Lamp designations and descriptions (refer to 5.1 (Part I))

Designation	Bulb	Base
S55/O-RV-	B17 (B54) or E17 (E54)	E26/24 medium screw
S55/O-NV	B25 (B80) or E23.5 (E75)	E39 mogul screw

1.2 Lamp physical and safety characteristics (refer to 5.2 (Part I))

	S55O-RV	*S55O-NV*
Bulb	B17 (B54) or E17 (E54)	B25 (B80) or E23.5 (E75)
Base	E26/24 medium screw	E39 mogul screw
Nominal diameter [1]	54 (2.13)	B25 bulb: 79.4 (3.13) E23.5 bulb: 74.6 (2.94)
Maximum overall length (MOL) [1]	145 (5.71)	197 (7.75)
Light center length (LCL) [1]	93 ± 9 (3.7 ± 0.35)	127 ± 3 (5.0 ± 0.12)
Arc length [1]	40 ± 6 (1.57 ± 0.24)	40 ± 6 (1.57 ± 0.24)
Arc length of improved color lamp [1] [4]	23 ± 4 (0.91 ± 0.16)	23 ± 4 (0.91 ± 0.16)
Maximum electrode tip deviation [2]	3	3
Maximum permissible bulb temperature [3]	400 (752)	400 (752)
Maximum permissible base temperature [3]	190 (374)	210 (410)
Operating position limitation	None, unless indicated by lamp marking	None, unless indicated by lamp marking
Maximum outline drawing	Drawing 42-20	Drawing 42-40

[1] Dimensions are in mm, with equivalent inches within parentheses
[2] Maximum electrode tip deviation is from base axis (apex at base eyelet), measured in degrees; for single arc tube only
[3] Temperatures are in ºC, with equivalent ºF within parentheses
[4] The shorter arc length of the improved color HPS lamp may affect the candlepower distribution from a luminaire designed for a conventional HPS lamp

Copyright © 2004 by American National Standard Lighting Group – NEMA

Copyright National Electrical Manufacturers Association
Provided by IHS under license with NEMA
No reproduction or networking permitted without license from IHS
Not for Resale

1.3 Reference ballast requirements (refer to 5.3 (Part I))

Rated input voltage ..... 120 V
Reference current ..... 3.2 A
Impedance ..... 30 Ω

1.4 Operating requirements at 100 hours (conditions of 5.4 (Part I) apply)

	Measured on a reference ballast at rated input voltage +			Measured on a reference ballast at nominal lamp wattage		
	Min	Nom	Max	Min	Nom	Max
Voltage at lamp terminals (V, rms)	45	55	64	48	55	62
Lamp current (A, rms)		3.2			3.2	
Lamp wattage (W)		150		150	150	150

+ preferred data

1.5 Starting requirements (conditions of 5.5 (Part I) apply)

Starting time, max ..... 5 s
Input voltage to reference ballast ..... 110 V
Pulse height ..... 2225 V ± 25 V
Pulse rise time, max ..... 100 ns
Pulse width ..... 0.95 μs ± 0.05 μs

1.6 Warm-up time (conditions of 5.6 (Part I) apply)

Warm-up time ..... 5 min
Lamp voltage, min ..... 28 V
Input voltage to reference ballast ..... 110 V

2. Information for ballast design

2.1 Starting voltage requirements (conditions of 6.1 (Part I) apply)

Minimum rms open circuit voltage, lag circuit ballast ..... 110 V
Minimum rms open circuit voltage, lead circuit ballast ..... 110 V *
Pulse height ..... 2500 - 4000 V
Pulse width, min ..... 1 μs at 2250 V

* this value may be decreased to a minimum of 95 V rms if the peak voltage is increased 2 % for every 1 % reduction in rms value

2.2 Starting current (conditions of 6.2 (Part I) apply)

Minimum starting current, rms ..... 3.2 A
Maximum starting current, rms ..... 4.8 A

2.3 Current off time (refer to 6.3 (Part I))

At maximum short-circuit current, max ..... 2.5 ms
At nominal lamp operating current, max ..... 2.0 ms

Copyright © 2004 by American National Standard Lighting Group – NEMA

Copyright National Electrical Manufacturers Association
Provided by IHS under license with NEMA
No reproduction or networking permitted without license from IHS
Not for Resale

2.4 Current crest factor (refer to 6.4 (Part I))

1.8 maximum, during warm-up and operation.

2.5 Maximum peak voltage (across lamp terminals) (refer to 6.5 (Part I))

4000 V at any time.

2.6 Lamp operating limits (conditions of 6.6 (Part I) apply)

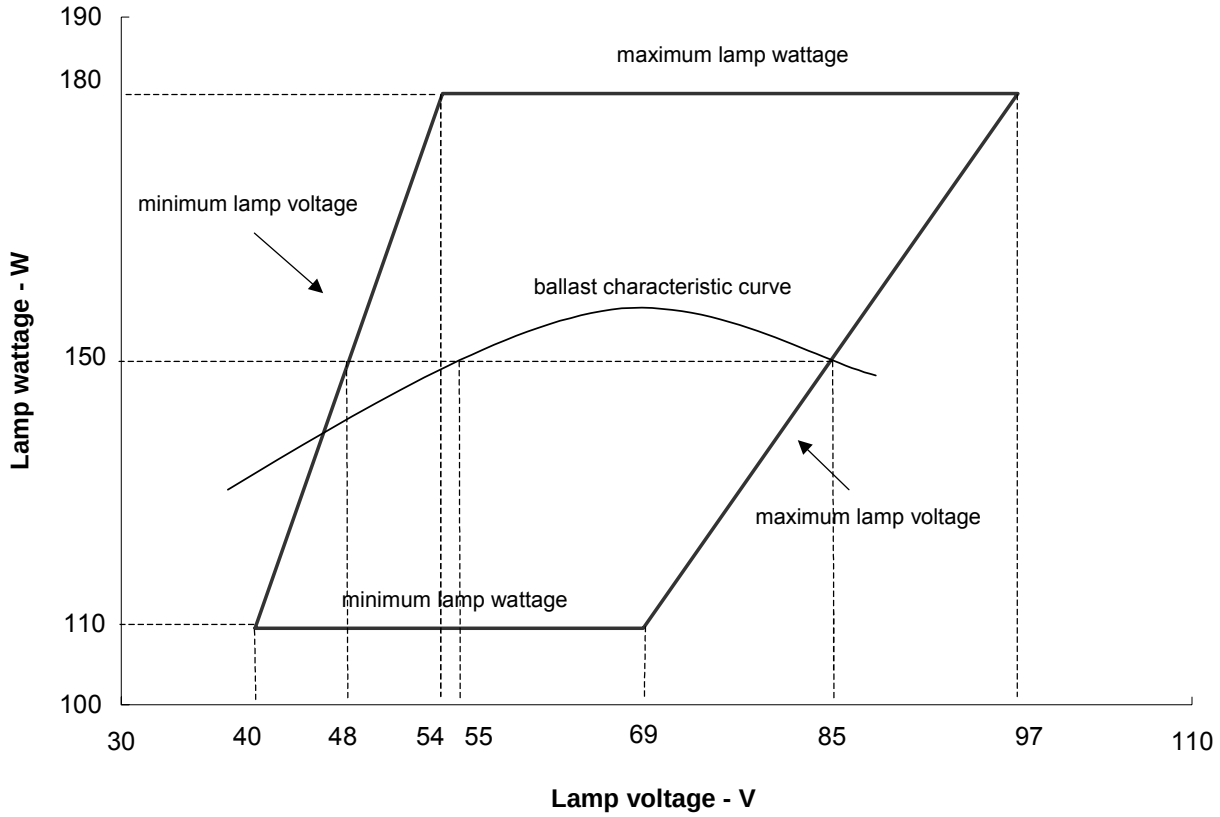

3. Information for luminaire design (conditions of 7 (Part I) apply)

3.1 Lamp voltage rise limits

Maximum voltage rise .....5 V

Copyright National Electrical Manufacturers Association
Provided by IHS under license with NEMA
No reproduction or networking permitted without license from IHS Not for Resale

150-Watt 100-Volt S56 HPS lamp

1. Lamp specifications

1.1 Lamp designations and descriptions (refer to 5.1 (Part I))

Designation	Bulb	Base
S56/O-KA	B28 (B90) or E28 (E90)	E39 mogul screw

1.2 Lamp physical and safety characteristics (refer to 5.2 (Part I))

	S56/O-KA
Bulb	B28 (B90) or E28 (E90)
Base	E39 mogul screw
Nominal diameter [1]	90 (3.53)
Maximum overall length (MOL) [1]	228 (8.98)
Light center length (LCL) [1]	127 ± 3 (5.0 ± 0.12)
Arc length [1]	51 ± 11 (2.0 ± 0.43)
Maximum electrode tip deviation [2]	3
Maximum permissible bulb temperature [3]	400 (752)
Maximum permissible base temperature [3]	210 (410)
Operating position limitation	None, unless indicated by lamp marking
Maximum outline drawing	Drawing 42-60

[1] Dimensions are in mm, with equivalent inches within parentheses
[2] Maximum electrode tip deviation is from base axis (apex at base eyelet), measured in degrees; for single arc tube only
[3] Temperatures are in ºC, with equivalent ºF within parentheses

Copyright © 2004 by American National Standard Lighting Group – NEMA

Copyright National Electrical Manufacturers Association
Provided by IHS under license with NEMA
No reproduction or networking permitted without license from IHS
Not for Resale

1.3 Reference ballast requirements (refer to 5.3 (Part I))

Rated input voltage ..... 220 V
Reference current ..... 1.8 A
Impedance ..... 97 Ω

1.4 Operating requirements at 100 hours (conditions of 5.4 (Part I) apply)

	Measured on a reference ballast at rated input voltage +			Measured on a reference ballast at nominal lamp wattage		
	Min	Nom	Max	Min	Nom	Max
Voltage at lamp terminals (V, rms)	75	100	117	85	100	115
Lamp current (A, rms)		1.8			1.8	
Lamp wattage (W)		150		150	150	150

+ preferred data

1.5 Starting requirements (conditions of 5.5 (Part I) apply)

Starting time, max ..... 5 s
Input voltage to reference ballast ..... 198 V
Pulse height ..... 2225 V ± 25 V
Pulse rise time, max ..... 100 ns
Pulse width ..... 0.95 μs ± 0.05 μs

1.6 Warm-up time (conditions of 5.6 (Part I) apply)

Warm-up time ..... 5 min
Lamp voltage, min ..... 50 V
Input voltage to reference ballast ..... 198 V

2. Information for ballast design

2.1 Starting voltage requirements (conditions of 6.1 (Part I) apply)

Minimum rms open circuit voltage, lag circuit ballast ..... 198 V
Minimum rms open circuit voltage, lead circuit ballast ..... 198 V *
Pulse height ..... 2500 - 4000 V
Pulse width, min ..... 1 μs at 2250 V

* this value may be decreased to a minimum of 175 V rms if the peak voltage is increased 2 % for every 1 % reduction in rms value

2.2 Starting current (conditions of 6.2 (Part I) apply)

Minimum starting current, rms ..... 1.8 A
Maximum starting current, rms ..... 3.0 A

2.3 Current off time (refer to 6.3 (Part I))

At maximum short-circuit current, max ..... 2.5 ms
At nominal lamp operating current, max ..... 2.0 ms

Copyright © 2004 by American National Standard Lighting Group – NEMA

Copyright National Electrical Manufacturers Association
Provided by IHS under license with NEMA
No reproduction or networking permitted without license from IHS
Not for Resale

2.4 Current crest factor (refer to 6.4 (Part I))

1.8 maximum, during warm-up and operation.

2.5 Maximum peak voltage (across lamp terminals) (refer to 6.5 (Part I))

4000 V at any time.

2.6 Lamp operating limits (conditions of 6.6 (Part I) apply)

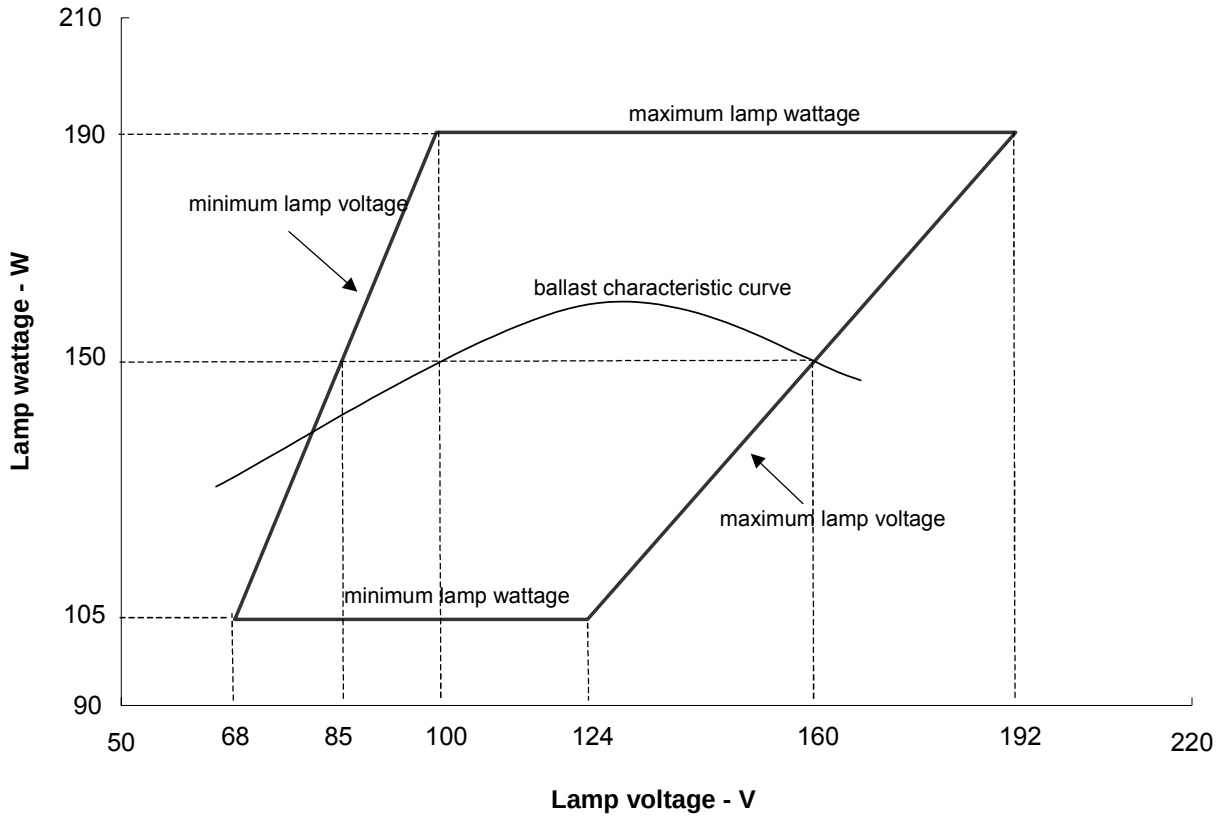

3. Information for luminaire design (conditions of 7 (Part I) apply)

3.1 Lamp voltage rise limits

Maximum voltage rise .....7 V

Copyright National Electrical Manufacturers Association
Provided by IHS under license with NEMA
No reproduction or networking permitted without license from IHS Not for Resale

200-Watt 100-Volt S66 HPS lamp

1. Lamp specifications

1.1 Lamp designations and descriptions (refer to 5.1 (Part I))

Designation	Bulb	Base
S66/O-EJ	E18 (E57)	E39 mogul screw

1.2 Lamp physical and safety characteristics (refer to 5.2 (Part I))

	S66/O-EJ
Bulb	E18 (E57)
Base	E39 mogul screw
Nominal diameter [1]	57 (2.20)
Maximum overall length (MOL) [1]	248 (9.76)
Light center length (LCL) [1]	146 ± 3 (5.75 ± 0.12)
Arc length [1]	56 ± 11 (2.20 ± 0.43)
Maximum electrode tip deviation [2]	3
Maximum permissible bulb temperature [3]	400 (752)
Maximum permissible base temperature [3]	210 (410)
Operating position limitation	None, unless indicated by lamp marking
Maximum outline drawing	Drawing 42-30

[1] Dimensions are in mm, with equivalent inches within parentheses
[2] Maximum electrode tip deviation is from base axis (apex at base eyelet), measured in degrees; for single arc tube only
[3] Temperatures are in ºC, with equivalent ºF within parentheses

Copyright © 2004 by American National Standard Lighting Group – NEMA

Copyright National Electrical Manufacturers Association
Provided by IHS under license with NEMA
No reproduction or networking permitted without license from IHS
Not for Resale

1.3 Reference ballast requirements (refer to 5.3 (Part I))

Rated input voltage ..... 220 V
Reference current ..... 2.4 A
Impedance ..... 74.6 Ω

1.4 Operating requirements at 100 hours (conditions of 5.4 (Part I) apply)

	Measured on a reference ballast at rated input voltage +			Measured on a reference ballast at nominal lamp wattage		
	Min	Nom	Max	Min	Nom	Max
Voltage at lamp terminals (V, rms)	80	100	122	90	100	120
Lamp current (A, rms)		2.4			2.4	
Lamp wattage (W)		200		200	200	200

+ preferred data

1.5 Starting requirements (conditions of 5.5 (Part I) apply)

Starting time, max ..... 5 s
Input voltage to reference ballast ..... 198 V
Pulse height ..... 2225 V ± 25 V
Pulse rise time, max ..... 100 ns
Pulse width ..... 0.95 μs ± 0.05 μs

1.6 Warm-up time (conditions of 5.6 (Part I) apply)

Warm-up time ..... 5 min
Lamp voltage, min ..... 50 V
Input voltage to reference ballast ..... 198 V

2. Information for ballast design

2.1 Starting voltage requirements (conditions of 6.1 (Part I) apply)

Minimum rms open circuit voltage, lag circuit ballast ..... 198 V
Minimum rms open circuit voltage, lead circuit ballast ..... 198 V *
Pulse height ..... 2500 - 4000 V
Pulse width, min ..... 1 μs at 2250 V

* this value may be decreased to a minimum of 170 V rms if the peak voltage is increased 2 % for every 1 % reduction in rms value

2.2 Starting current (conditions of 6.2 (Part I) apply)

Minimum starting current, rms ..... 2.4 A
Maximum starting current, rms ..... 3.6 A

2.3 Current off time (refer to 6.3 (Part I))

At maximum short-circuit current, max ..... 2.5 ms
At nominal lamp operating current, max ..... 2.0 ms

Copyright © 2004 by American National Standard Lighting Group – NEMA

Copyright National Electrical Manufacturers Association
Provided by IHS under license with NEMA
No reproduction or networking permitted without license from IHS
Not for Resale

2.4 Current crest factor (refer to 6.4 (Part I))

1.8 maximum, during warm-up and operation.

2.5 Maximum peak voltage (across lamp terminals) (refer to 6.5 (Part I))

4000 V at any time.

2.6 Lamp operating limits (conditions of 6.6 (Part I) apply)

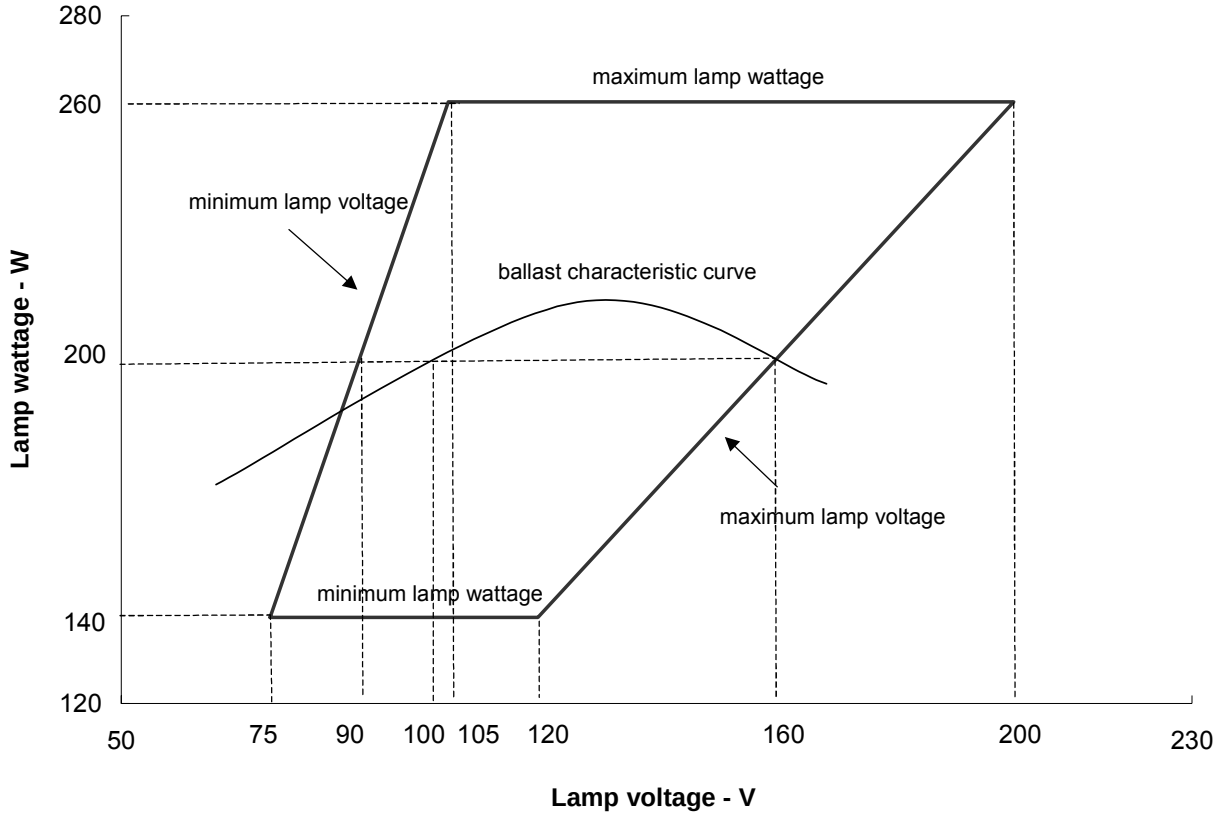

3. Information for luminaire design (conditions of 7 (Part I) apply)

3.1 Lamp voltage rise limits

Maximum voltage rise .....10 V

Copyright © 2004 by American National Standard Lighting Group – NEMA

Copyright National Electrical Manufacturers Association
Provided by IHS under license with NEMA
No reproduction or networking permitted without license from IHS
Not for Resale

250-Watt 100-Volt S50 HPS lamp

1. Lamp specifications

1.1 Lamp designations and descriptions (refer to 5.1 (Part I))

Designation	Bulb	Base
S50/O-EJ	E18 (E57)	E39 mogul screw
S50/O-KA	B28 (B90) or E28 (E90)	E39 mogul screw

1.2 Lamp physical and safety characteristics (refer to 5.2 (Part I))

	S50/O-EJ	*S50/O-KA*
Bulb	E18 (E57)	B28 (B90) or E28 (E90)
Base	E39 mogul screw	E39 mogul screw
Nominal diameter [1]	57 (2.20)	90 (3.53)
Maximum overall length (MOL) [1]	248 (9.76)	228 (8.98)
Light center length (LCL) [1]	146 ± 3 (5.75 ± 0.12)	127 ± 8 (5.0 ± 0.32)
Arc length [1]	67 ± 9 (2.64 ± 0.35)	67 ± 9 (2.64 ± 0.35)
Arc length of improved color lamp [1] [4]	47 ±4 (1.85 ± 0.16)	NA
Arc length of mercury free lamp [1] [5]	86 ± 8 (3.38 ± 0.32)	NA
Maximum electrode tip deviation [2]	3	3
Maximum permissible bulb temperature [3]	400 (752)	400 (752)
Maximum permissible base temperature [3]	210 (410)	210 (410)
Operating position limitation	None, unless indicated by lamp marking	None, unless indicated by lamp marking
Maximum outline drawing	Drawing 42-30	Drawing 42-60

[1] Dimensions are in mm, with equivalent inches within parentheses
[2] Maximum electrode tip deviation is from base axis (apex at base eyelet), measured in degrees; for single arc tube only
[3] Temperatures are in ºC, with equivalent ºF within parentheses
[4] The shorter arc length of the improved color HPS lamp may affect the candlepower distribution from a luminaire designed for a conventional HPS lamp
[5] The longer arc length of the mercury free HPS lamp may affect the candle power distribution from a luminaire designed for a conventional HPS lamp.

Copyright © 2004 by American National Standard Lighting Group – NEMA

Copyright National Electrical Manufacturers Association
Provided by IHS under license with NEMA
No reproduction or networking permitted without license from IHS
Not for Resale

1.3 Reference ballast requirements (refer to 5.3 (Part I))

Rated input voltage ..... 220 V
Reference current ..... 3.0 A
Impedance ..... 59 Ω

1.4 Operating requirements at 100 hours (conditions of 5.4 (Part I) apply)

	Measured on a reference ballast at rated input voltage +			Measured on a reference ballast at nominal lamp wattage		
	Min	Nom	Max	Min	Nom	Max
Voltage at lamp terminals (V, rms)	77	100	130	90	100	120
Lamp current (A, rms)		3.0			3.0	
Lamp wattage (W)		250		250	250	250

+ preferred data

1.5 Starting requirements (conditions of 5.5 (Part I) apply)

Starting time, max ..... 5 s
Input voltage to reference ballast ..... 198 V
Pulse height ..... 2225 V ± 25 V
Pulse rise time, max ..... 100 ns
Pulse width ..... 0.95 μs ± 0.05 μs

1.6 Warm-up time (conditions of 5.6 (Part I) apply)

Warm-up time ..... 4 min
Lamp voltage, min ..... 50 V
Input voltage to reference ballast ..... 198 V

2. Information for ballast design

2.1 Starting voltage requirements (conditions of 6.1 (Part I) apply)

Minimum rms open circuit voltage, lag circuit ballast ..... 198 V
Minimum rms open circuit voltage, lead circuit ballast ..... 198 V *
Pulse height ..... 2500 - 4000 V
Pulse width, min ..... 1 μs at 2250 V

* this value may be decreased to a minimum of 175 V rms if the peak voltage is increased 2 % for every 1 % reduction in rms value

2.2 Starting current (conditions of 6.2 (Part I) apply)

Minimum starting current, rms ..... 3.0 A
Maximum starting current, rms ..... 4.5 A

2.3 Current off time (refer to 6.3 (Part I))

At maximum short-circuit current, max ..... 2.5 ms
At nominal lamp operating current, max ..... 2.0 ms

Copyright © 2004 by American National Standard Lighting Group – NEMA

Copyright National Electrical Manufacturers Association
Provided by IHS under license with NEMA
No reproduction or networking permitted without license from IHS
Not for Resale

2.4 Current crest factor (refer to 6.4 (Part I))

1.8 maximum, during warm-up and operation.

2.5 Maximum peak voltage (across lamp terminals) (refer to 6.5 (Part I))

4000 V at any time.

2.6 Lamp operating limits (conditions of 6.6 (Part I) apply)

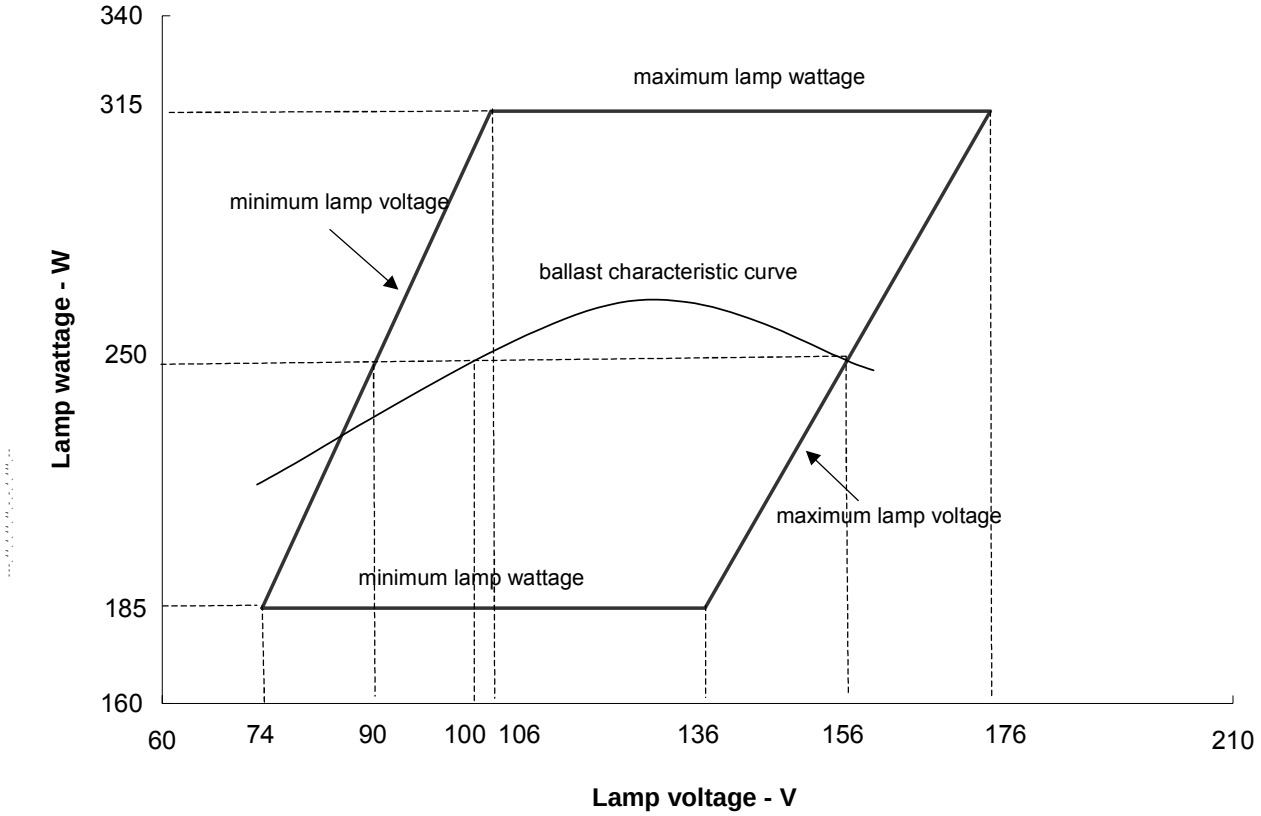

3. Information for luminaire design (conditions of 7 (Part I) apply)

3.1 Lamp voltage rise limits

Maximum voltage rise .....10 V

Copyright National Electrical Manufacturers Association
Provided by IHS under license with NEMA
No reproduction or networking permitted without license from IHS Not for Resale

310-Watt 100-Volt S67 HPS lamp

1. Lamp specifications

1.1 Lamp designations and descriptions (refer to 5.1 (Part I))

Designation	Bulb	Base
S67/O-EJ	E18 (E57)	E39 mogul screw

1.2 Lamp physical and safety characteristics (refer to 5.2 (Part I))

	S67/O-EJ
Bulb	E18 (E57)
Base	E39 mogul screw
Nominal diameter [1]	57 (2.20)
Maximum overall length (MOL) [1]	248 (9.76)
Light center length (LCL) [1]	146 ± 3 (5.75 ± 0.12)
Arc length [1]	69 ± 10 (2.70 ± 0.39)
Maximum electrode tip deviation [2]	3
Maximum permissible bulb temperature [3]	400 (752)
Maximum permissible base temperature [3]	210 (410)
Operating position limitation	None, unless indicated by lamp marking
Maximum outline drawing	Drawing 42-30

[1] Dimensions are in mm, with equivalent inches within parentheses
[2] Maximum electrode tip deviation is from base axis (apex at base eyelet), measured in degrees; for single arc tube only
[3] Temperatures are in ºC, with equivalent ºF within parentheses

Copyright © 2004 by American National Standard Lighting Group – NEMA

Copyright National Electrical Manufacturers Association
Provided by IHS under license with NEMA
No reproduction or networking permitted without license from IHS
Not for Resale

1.3 Reference ballast requirements (refer to 5.3 (Part I))

Rated input voltage ..... 220 V
Reference current ..... 3.6 A
Impedance ..... 49 Ω

1.4 Operating requirements at 100 hours (conditions of 5.4 (Part I) apply)

	Measured on a reference ballast at rated input voltage +			Measured on a reference ballast at nominal lamp wattage		
	Min	Nom	Max	Min	Nom	Max
Voltage at lamp terminals (V, rms)	83	100	127	90	100	120
Lamp current (A, rms)		3.6			3.6	
Lamp wattage (W)		310		310	310	310

+ preferred data

1.5 Starting requirements (conditions of 5.5 (Part I) apply)

Starting time, max ..... 5 s
Input voltage to reference ballast ..... 198 V
Pulse height ..... 2225 V ± 25 V
Pulse rise time, max ..... 100 ns
Pulse width ..... 0.95 μs ± 0.05 μs

1.6 Warm-up time (conditions of 5.6 (Part I) apply)

Warm-up time ..... 4 min
Lamp voltage, min ..... 50 V
Input voltage to reference ballast ..... 198 V

2. Information for ballast design

2.1 Starting voltage requirements (conditions of 6.1 (Part I) apply)

Minimum rms open circuit voltage, lag circuit ballast ..... 198 V
Minimum rms open circuit voltage, lead circuit ballast ..... 198 V *
Pulse height ..... 2500 - 4000 V
Pulse width, min ..... 1 μs at 2250 V

* this value may be decreased to a minimum of 170 V rms if the peak voltage is increased 2 % for every 1 % reduction in rms value

2.2 Starting current (conditions of 6.2 (Part I) apply)

Minimum starting current, rms ..... 3.6 A
Maximum starting current, rms ..... 5.5 A

2.3 Current off time (refer to 6.3 (Part I))

At maximum short-circuit current, max ..... 2.5 ms
At nominal lamp operating current, max ..... 2.0 ms

2.4 Current crest factor (refer to 6.4 (Part I))

1.8 maximum, during warm-up and operation.

Copyright © 2004 by American National Standard Lighting Group – NEMA

Copyright National Electrical Manufacturers Association
Provided by IHS under license with NEMA
No reproduction or networking permitted without license from IHS
Not for Resale

2.5 Maximum peak voltage (across lamp terminals) (refer to 6.5 (Part I))

4000 V at any time.

2.6 Lamp operating limits (conditions of 6.6 (Part I) apply)

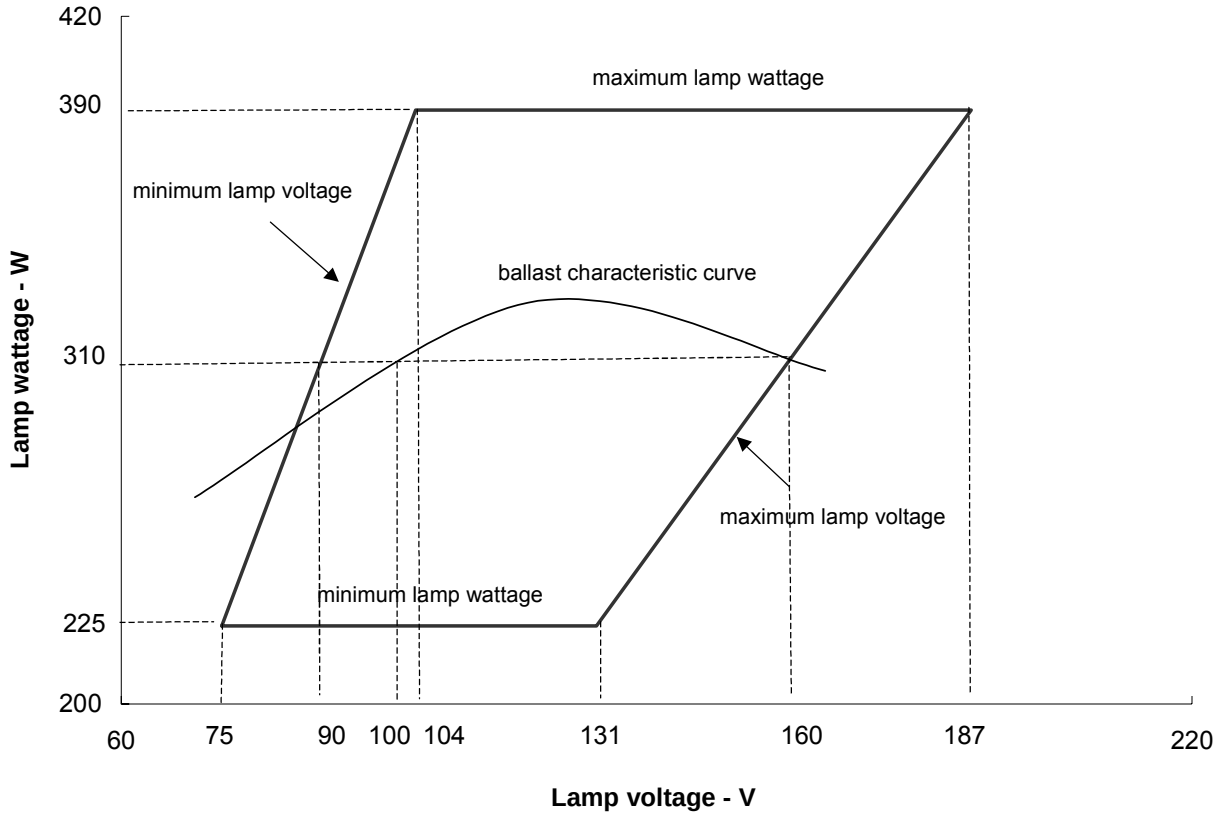

3. Information for luminaire design (conditions of 7 (Part I) apply)

3.1 Lamp voltage rise limits

Maximum voltage rise ..... 10 V

Copyright © 2004 by American National Standard Lighting Group – NEMA

Copyright National Electrical Manufacturers Association
Provided by IHS under license with NEMA
No reproduction or networking permitted without license from IHS
Not for Resale

400-Watt 100-Volt S51 HPS lamp

1. Lamp specifications

1.1 Lamp designations and descriptions (refer to 5.1 (Part I))

Designation	Bulb	Base
S51/O-EJ	E18 (E57)	E39 mogul screw
S51/O-ZC	B37 (B118) or E37 (E118)	E39 mogul screw

1.2 Lamp physical and safety characteristics (refer to 5.2 (Part I))

	S51/O-EJ	*S51/O-ZC*
Bulb	E18 (E57)	B37 (B118) or E37 (E118)
Base	E39 mogul screw	E39 mogul screw
Nominal diameter [1]	57 (2.20)	118 (4.6)
Maximum overall length (MOL) [1]	248 (9.76)	292 (11.5)
Light center length (LCL) [1]	146 ± 3 (5.75 ± 0.12)	178 ± 6 (7.0 ± 0.24)
Arc length [1]	75 ± 14 (2.95 ± 0.55)	75 ± 14 (2.95 ± 0.55)
Arc length of improved color lamp [1] [4]	57 ± 8 (2.24 ± 0.31)	NA
Arc Length of mercury free lamp	102 ± 12 (4.02±0.47)	NA
Maximum electrode tip deviation [2]	3	3
Maximum permissible bulb temperature [3]	400 (752)	400 (752)
Maximum permissible base temperature [3]	210 (410)	210 (410)
Operating position limitation	None, unless indicated by lamp marking	None, unless indicated by lamp marking
Maximum outline drawing	Drawing 42-30	Drawing 42-70

[1] Dimensions are in mm, with equivalent inches within parentheses
[2] Maximum electrode tip deviation is from base axis (apex at base eyelet), measured in degrees; for single arc tube only
[3] Temperatures are in ºC, with equivalent ºF within parentheses
[4] The shorter arc length of the improved color HPS lamp may affect the candlepower distribution from a luminaire designed for a conventional HPS lamp
[5] The longer arc length of the mercury free HPS lamp may affect the candle power distribution from a luminaire designed for a conventional HPS lamp.

Copyright © 2004 by American National Standard Lighting Group – NEMA

Copyright National Electrical Manufacturers Association
Provided by IHS under license with NEMA
No reproduction or networking permitted without license from IHS
Not for Resale

1.3 Reference ballast requirements (refer to 5.3 (Part I))

Rated input voltage ..... 220 V
Reference current ..... 4.6 A
Impedance ..... 38.3 Ω

1.4 Operating requirements at 100 hours (conditions of 5.4 (Part I) apply)

	Measured on a reference ballast at rated input voltage +			Measured on a reference ballast at nominal lamp wattage		
	Min	Nom	Max	Min	Nom	Max
Voltage at lamp terminals (V, rms)	74	100	120	84	100	115
Lamp current (A, rms)		4.6			4.6	
Lamp wattage (W)		400		400	400	400

+ preferred data

1.5 Starting requirements (conditions of 5.5 (Part I) apply)

Starting time, max ..... 5 s
Input voltage to reference ballast ..... 198 V
Pulse height ..... 2225 V ± 25 V
Pulse rise time, max ..... 100 ns
Pulse width ..... 0.95 μs ± 0.05 μs

1.6 Warm-up time (conditions of 5.6 (Part I) apply)

Warm-up time ..... 4 min
Lamp voltage, min ..... 50 V
Input voltage to reference ballast ..... 198 V

2. Information for ballast design

2.1 Starting voltage requirements (conditions of 6.1 (Part I) apply)

Minimum rms open circuit voltage, lag circuit ballast ..... 198 V
Minimum rms open circuit voltage, lead circuit ballast ..... 198 V *
Pulse height ..... 2500 - 4000 V
Pulse width, min ..... 1 μs at 2250 V

* this value may be decreased to a minimum of 175 V rms if the peak voltage is increased 2 % for every 1 % reduction in rms value

2.2 Starting current (conditions of 6.2 (Part I) apply)

Minimum starting current, rms ..... 4.6 A
Maximum starting current, rms ..... 7.5 A

2.3 Current off time (refer to 6.3 (Part I))

At maximum short-circuit current, max ..... 2.5 ms
At nominal lamp operating current, max ..... 2.0 ms

Copyright © 2004 by American National Standard Lighting Group – NEMA

Copyright National Electrical Manufacturers Association
Provided by IHS under license with NEMA
No reproduction or networking permitted without license from IHS
Not for Resale

2.4 Current crest factor (refer to 6.4 (Part I))

1.8 maximum, during warm-up and operation.

2.5 Maximum peak voltage (across lamp terminals) (refer to 6.5 (Part I))

4000 V at any time.

2.6 Lamp operating limits (conditions of 6.6 (Part I) apply)

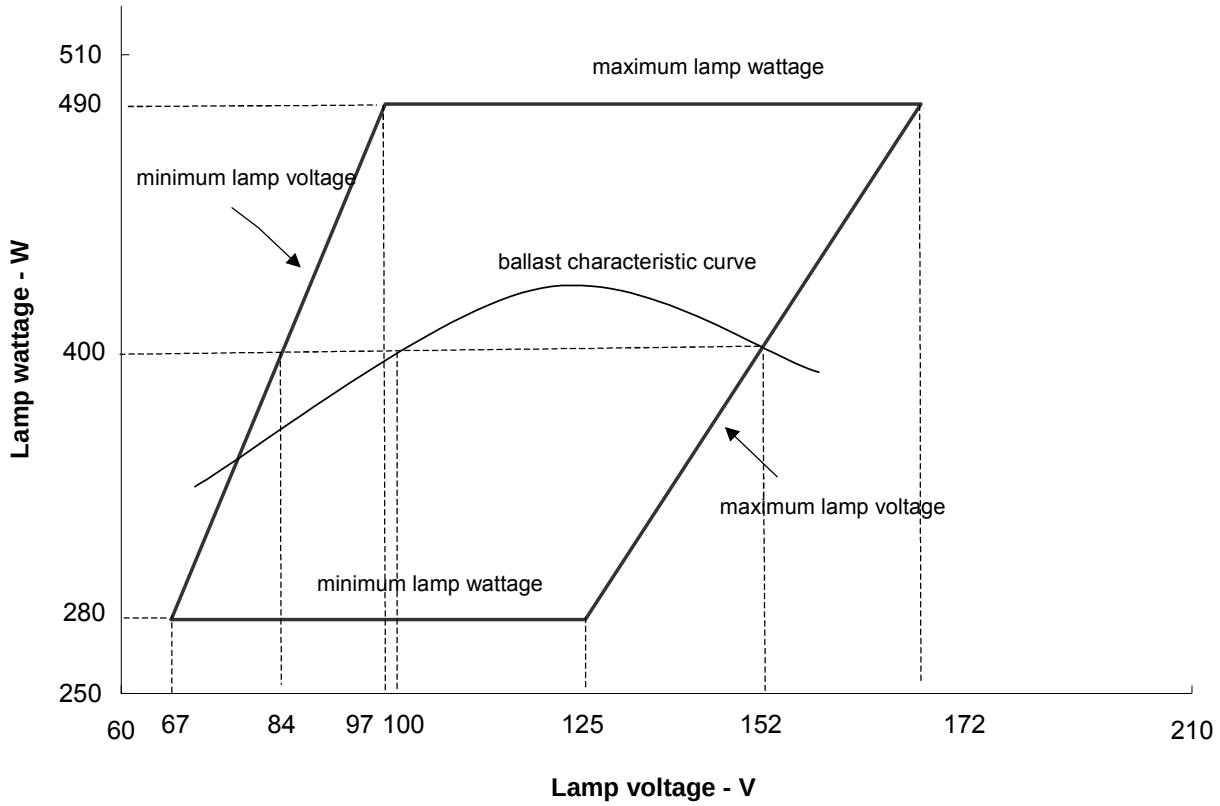

3. Information for luminaire design (conditions of 7 (Part I) apply)

3.1 Lamp voltage rise limits

Maximum voltage rise .....11 V

Copyright © 2004 by American National Standard Lighting Group – NEMA

Copyright National Electrical Manufacturers Association
Provided by IHS under license with NEMA
No reproduction or networking permitted without license from IHS
Not for Resale

430-Watt 116-Volt S145 HPS lamp

1. Lamp specifications

1.1 Lamp designations and descriptions (refer to 5.1 (Part I))

Designation	Bulb	Base
S145/O-EJ	E18 (E57)	E39 mogul screw
S145/O-AE	T15	E39 mogul screw

1.2 Lamp physical and safety characteristics (refer to 5.2 (Part I))

	S145/O-EJ	*S145/O-AE*
Bulb	E18 (E57)	T15 (T48)
Base	E39 mogul screw	E39 mogul screw
Nominal diameter [1]	57 (2.20)	48 (1.88)
Maximum overall length (MOL) [1]	248 (9.76)	285 (11.22)
Light center length (LCL) [1]	146 ± 3 (5.75 ± 0.12)	174 ± 3 (6.85 ± 0.12)
Arc length [1]	75 ± 14 (2.95 ± 0.55)	75 ± 14 (2.95 ± 0.55)
Maximum electrode tip deviation [2]	3	3
Maximum permissible bulb temperature [3]	400 (752)	400 (752)
Maximum permissible base temperature [3]	210 (410)	210 (410)
Operating position limitation	None, unless indicated by lamp marking	None, unless indicated by lamp marking
Maximum outline drawing	Drawing 42-30	Drawing 42-90

[1] Dimensions are in mm, with equivalent inches within parentheses
[2] Maximum electrode tip deviation is from base axis (apex at base eyelet), measured in degrees; for single arc tube only
[3] Temperatures are in ºC, with equivalent ºF within parentheses

Copyright © 2004 by American National Standard Lighting Group – NEMA

Copyright National Electrical Manufacturers Association
Provided by IHS under license with NEMA
No reproduction or networking permitted without license from IHS
Not for Resale

1.3 Reference ballast requirements (refer to 5.3 (Part I))

Rated input voltage ..... 220 V
Reference current ..... 4.6 A
Impedance ..... 38.3 Ω

1.4 Operating requirements at 100 hours (conditions of 5.4 (Part I) apply)

	Measured on a reference ballast at rated input voltage +			Measured on a reference ballast at nominal lamp wattage		
	Min	Nom	Max	Min	Nom	Max
Voltage at lamp terminals (V, rms)	94	116	136	101	116	131
Lamp current (A, rms)		4.25			4.25	
Lamp wattage (W)		430		430	430	430

+ preferred data

1.5 Starting requirements (conditions of 5.5 (Part I) apply)

Starting time, max ..... 5 s
Input voltage to reference ballast ..... 198 V
Pulse height ..... 2225 V ± 25 V
Pulse rise time, max ..... 100 ns
Pulse width ..... 0.95 μs ± 0.05 μs

1.6 Warm-up time (conditions of 5.6 (Part I) apply)

Warm-up time ..... 4 min
Lamp voltage, min ..... 50 V
Input voltage to reference ballast ..... 198 V

2. Information for ballast design

2.1 Starting voltage requirements (conditions of 6.1 (Part I) apply)

Minimum rms open circuit voltage, lag circuit ballast ..... 198 V
Minimum rms open circuit voltage, lead circuit ballast ..... 198 V *
Pulse height ..... 2500 - 4000 V
Pulse width, min ..... 1 μs at 2250 V

* this value may be decreased to a minimum of 175 V rms if the peak voltage is increased 2 % for every 1 % reduction in rms value

2.2 Starting current (conditions of 6.2 (Part I) apply)

Minimum starting current, rms ..... 4.6 A
Maximum starting current, rms ..... 7.5 A

2.3 Current off time (refer to 6.3 (Part I))

At maximum short-circuit current, max ..... 2.5 ms
At nominal lamp operating current, max ..... 2.0 ms

Copyright © 2004 by American National Standard Lighting Group – NEMA

Copyright National Electrical Manufacturers Association
Provided by IHS under license with NEMA
No reproduction or networking permitted without license from IHS
Not for Resale

2.4 Current crest factor (refer to 6.4 (Part I))

1.8 maximum, during warm-up and operation.

2.5 Maximum peak voltage (across lamp terminals) (refer to 6.5 (Part I))

4000 V at any time.

2.6 Lamp operating limits (conditions of 6.6 (Part I) apply)

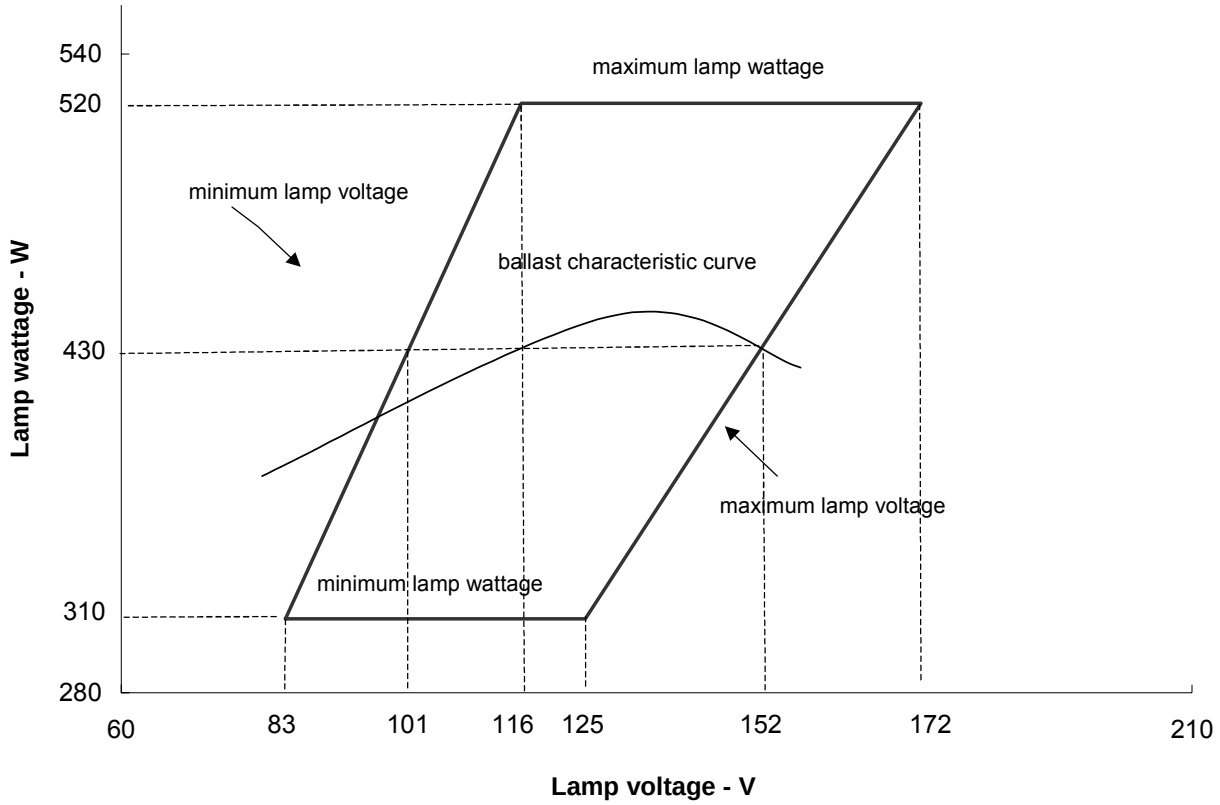

3. Information for luminaire design (conditions of 7 (Part I) apply)

3.1 Lamp voltage rise limits

Maximum voltage rise .....11 V

Copyright National Electrical Manufacturers Association
Provided by IHS under license with NEMA
No reproduction or networking permitted without license from IHS Not for Resale

1000-Watt 250-Volt S52 HPS lamp

1. Lamp specifications

1.1 Lamp designations and descriptions (refer to 5.1 (Part I))

Designation	Bulb	Base
S52/O-XB	E25 (E78)	E39 ceramic mogul screw
S52/O-ZC	B37 (B118) or E37 (E118)	E39 ceramic mogul screw

1.2 Lamp physical and safety characteristics (refer to 5.2 (Part I))

	S52/O-XB	*S52/O-ZC*
Bulb	E25 (E78)	B37 (B118) or E37 (E118)
Base	E39 ceramic mogul screw	E39 ceramic mogul screw
Nominal diameter [1]	78 (3.1)	118 (4.6)
Maximum overall length (MOL) [1]	383 (15.08)	292 (11.5)
Light center length (LCL) [1]	222 ± 6 (8.74 ± .24)	178 ± 6 (7.0 ± 0.24)
Arc length [1] [4]	222 ± 23 (8.74 ± 0.90)	126 ± 8 (4.96 ± 0.31)
Maximum electrode tip deviation [2]	3	3
Maximum permissible bulb temperature [3]	400 (752)	400 (752)
Maximum permissible base temperature [3]	210 (410)	210 (410)
Operating position limitation	None, unless indicated by lamp marking	None, unless indicated by lamp marking
Maximum outline drawing	Drawing 42-50	Drawing 42-70

[1] Dimensions are in mm, with equivalent inches within parentheses
[2] Maximum electrode tip deviation is from base axis (apex at base eyelet), measured in degrees; for single arc tube only
[3] Temperatures are in ºC, with equivalent ºF within parentheses
[4] The S52ZC lamp contains two arc tubes that operate simultaneously; they are physically in parallel, and electrically in series

Copyright © 2004 by American National Standard Lighting Group – NEMA

Copyright National Electrical Manufacturers Association
Provided by IHS under license with NEMA
No reproduction or networking permitted without license from IHS
Not for Resale

1.3 Reference ballast requirements (refer to 5.3 (Part I))

Rated input voltage ..... 480 V
Reference current ..... 4.7 A
Impedance ..... 77 Ω

1.4 Operating requirements at 100 hours (conditions of 5.4 (Part I) apply)

	Measured on a reference ballast at rated input voltage +			Measured on a reference ballast at nominal lamp wattage		
	Min	Nom	Max	Min	Nom	Max
Voltage at lamp terminals (V, rms)	194	250	278	210	250	275
Lamp current (A, rms)		4.7			4.7	
Lamp wattage (W)		1000		1000	1000	1000
		+ preferred data				

1.5 Starting requirements (conditions of 5.5 (Part I) apply)

Starting time, max ..... 5 s
Input voltage to reference ballast ..... 456 V
Pulse height ..... 2675 V ± 25 V
Pulse rise time, max ..... 100 ns
Pulse width ..... 3.95 μs ± 0.05 μs

1.6 Warm-up time (conditions of 5.6 (Part I) apply)

Warm-up time ..... 7 min
Lamp voltage, min ..... 125 V
Input voltage to reference ballast ..... 456 V

2. Information for ballast design

2.1 Starting voltage requirements (conditions of 6.1 (Part I) apply)

Minimum rms open circuit voltage, lag circuit ballast ..... 456 V
Minimum rms open circuit voltage, lead circuit ballast ..... 456 V *
Pulse height ..... 3000 - 5000 V
Pulse width, min ..... 4 μs at 2700 V

* this value may be decreased to a minimum of 400 V rms if the peak voltage is increased 2 % for every 1 % reduction in rms value

2.2 Starting current (conditions of 6.2 (Part I) apply)

Minimum starting current, rms ..... 4.7 A
Maximum starting current, rms ..... 8.0 A

2.3 Current off time (refer to 6.3 (Part I))

At maximum short-circuit current, max ..... 2.5 ms
At nominal lamp operating current, max ..... 1.5 ms

Copyright © 2004 by American National Standard Lighting Group – NEMA

Copyright National Electrical Manufacturers Association
Provided by IHS under license with NEMA
No reproduction or networking permitted without license from IHS
Not for Resale

2.4 Current crest factor (refer to 6.4 (Part I))

1.8 maximum, during warm-up and operation.

2.5 Maximum peak voltage (across lamp terminals) (refer to 6.5 (Part I))

5000 V at any time.

2.6 Lamp operating limits (conditions of 6.6 (Part I) apply)

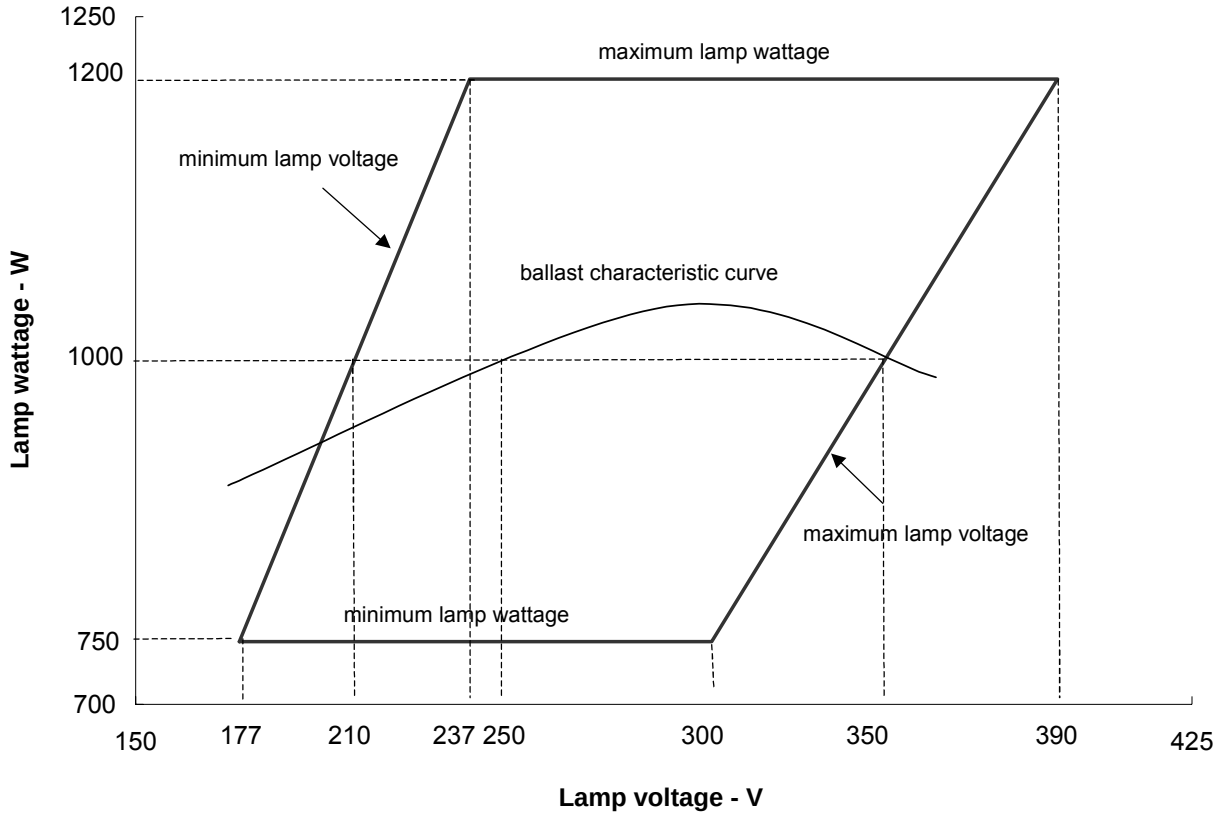

3. Information for luminaire design (conditions of 7 (Part I) apply)

3.1 Lamp voltage rise limits

Maximum voltage rise .....25 V

3.2 Lampholder

UL496 requires use of 5 kV pulse-rated lampholders.

Copyright © 2004 by American National Standard Lighting Group – NEMA

Copyright National Electrical Manufacturers Association
Provided by IHS under license with NEMA
No reproduction or networking permitted without license from IHS
Not for Resale