American National Standard

ANSI C78.40-1992
REVISION OF C78.40-1985

# SPECIFICATIONS FOR MERCURY LAMPS

NEMA

National Electrical
Manufacturers Association
2101 L Street, N.W.
Washington, D.C. 20037-1580
(202) 457-8409/1981

American National Standard

Copyright National Electrical Manufacturers Association
Provided by IHS under license with NEMA
No reproduction or networking permitted without license from IHS

Not for Resale

NEMA C78.40 92 6470247 0506927 755

**ANSI®**
**C78.40-1992**
**Revision of ANSI C78.40-1985**

# AMERICAN NATIONAL STANDARD

# FOR MERCURY LAMPS - SPECIFICATIONS

Secretariat

**National Electrical Manufacturers Association**

Approved August 20, 1992

**American National Standards Institute, Inc.**

Copyright National Electrical Manufacturers Association
Provided by IHS under license with NEMA
No reproduction or networking permitted without license from IHS
Not for Resale

**ANSI®**
**C78.40-1992**
**Revision of ANSI C78.40-1985**

# AMERICAN NATIONAL STANDARD

# FOR MERCURY LAMPS - SPECIFICATIONS

Secretariat

**National Electrical Manufacturers Association**

Approved August 20, 1992

**American National Standards Institute, Inc.**

Copyright National Electrical Manufacturers Association
Provided by IHS under license with NEMA
No reproduction or networking permitted without license from IHS

Not for Resale

# AMERICAN NATIONAL STANDARD

Approval of an American National Standard requires verification by ANSI that the requirements for due process, consensus, and other criteria for approval have been met by the standards developer.

Consensus is established when, in the judgment of the ANSI Board of Standards Review, substantial agreement has been reached by directly and materially affected interests. Substantial agreement means much more than a simple majority, but not necessarily unanimity. Consensus requires that all views and objections be considered, and that a concerted effort be made toward their resolution.

The use of American National Standards is completely voluntary; their existence does not in any respect preclude anyone, whether he has approved the standards or not, from manufacturing, marketing, purchasing, or using products, processes, or procedures not conforming to the standards.

The American National Standards Institute does not develop standards and will in no circumstances give an interpretation of any American National Standard. Moreover, no person shall have the right or authority to issue an interpretation of an American National Standard in the name of the American National Standards Institute. Requests for interpretations should be addressed to the secretariat or sponsor whose name appears on the title page of this standard.

**CAUTION NOTICE:** This American National Standard may be revised or withdrawn at any time. The procedures of the American National Standards Institute require that action be taken periodically to reaffirm, revise, or withdraw this standard. Purchasers of American National Standards may receive current information on all standards by calling or writing the American National Standards Institute.

Published by

**Accredited Standards Committee C78**
**National Electrical Manufacturers Association**
**2101 L Street, N.W. Suite 300, Washington, D.C. 20037**

Copyright © 1992 by ANS C78 Secretariat, National Electrical Manufacturers Association
All rights reserved.

No part of this publication may be reproduced in any form, in an electronic retrieval system or otherwise, without prior written permission of the publisher.

Printed in the United States of America

Copyright National Electrical Manufacturers Association
Provided by IHS under license with NEMA
No reproduction or networking permitted without license from IHS
Not for Resale

**AMERICAN NATIONAL STANDARD** **C78.40-1992**

# CONTENTS


PAGE

Foreword . . . . . iii
Organization Of This Standard . . . . . 1

PART I GENERAL INFORMATION . . . . . 3

Scope . . . . . 5
Normative References . . . . . 5
Lamp Designations . . . . . 6
Bulb Designations . . . . . 6
Base Specifications . . . . . 6
Maximum Outline Drawings . . . . . 6
Methods of Measurement . . . . . 6
Electrical Characteristics . . . . . 7
Reference Ballasts . . . . . 7
Ballast Design . . . . . 7

PART II LAMP DATA SHEETS . . . . . 9

40-Watt H45 Mercury Lamp . . . . . 11
50-Watt H46 Mercury Lamp . . . . . 14
75-Watt H43 Mercury Lamp . . . . . 17
100-Watt H38 Mercury Lamp . . . . . 20
100-Watt H44 Mercury Lamp . . . . . 23
175-Watt H39 Mercury Lamp . . . . . 26
250-Watt H37 Mercury Lamp . . . . . 29
400-Watt H33 Mercury Lamp . . . . . 32
700-Watt H35 Mercury Lamp . . . . . 35
1000-Watt H34 Mercury Lamp . . . . . 38
1000-Watt H36 Mercury Lamp . . . . . 41

PART III MAXIMUM OUTLINE DRAWINGS . . . . . 45

Base: Medium Screw (E26) Bulb: BD17, ED17, B17, E17 MOL: 131 . . 47
Base: Medium Screw (E26) Bulb: BD17, ED17, B17, E17 MOL: 139 . . 48
Base: Medium Screw (E26) Bulb: A23 MOL 139 . . . . . 49
Base: Mogul Screw (E39) Bulb: ED23.5 MOL 191 . . . . . 50
Base: Admedium Skirted Screw Bulb: Par37 Reflector Spotlight
Par38 Reflector Floodlight MOL 138 . . . . . 51
Base: Admedium, Bulb T10, MOL 143 . . . . . 52
Base: Mogul Screw (E39) Bulb: BT28, E28, ED28 MOL 211 . . . . . 53
Base: Mogul Screw (E39) Bulb: BT37, ED37, E37 MOL 292 . . . . . 54
Base: Mogul Screw (E39) Bulb: BT46 MOL 368 . . . . . 55
Base: Mogul Screw (E39) Bulb: BT56 MOL 391 . . . . . 56




Copyright National Electrical Manufacturers Association
Provided by IHS under license with NEMA
No reproduction or networking permitted without license from IHS
Not for Resale

# AMERICAN NATIONAL STANDARD C78.40-1992



Copyright National Electrical Manufacturers Association
Provided by IHS under license with NEMA
No reproduction or networking permitted without license from IHS
Not for Resale

## AMERICAN NATIONAL STANDARD C78.40-1992

**FOREWORD** (This Foreword is not part of American National Standard C78.40-1992)

This edition of the American National Standard for Mercury Lamps - Specifications. ANSI C78.40-1992, supersedes the 1985 edition. It contains an individual data sheet and the maximum outline drawings for each size of mercury lamp covered. (See the introductory explanation of the organization of this standard.) Prior to the 1985 revision, all of the standards for mercury lamps were published as a part of a collection known as the American National Standard for Mercury Lamps, ANSI C78 (1969 edition, 1972 supplement and 1985 edition).

Suggestions for improvement of this standard will be welcome. They should be sent to the Secretariat, C78 Committee, National Electrical Manufacturers Association, 2101 L Street, N.W., Suite 300, Washington, DC 20037.

This standard was processed and approved for submittal to ANSI by Accredited Standards Committee on Electric Lamps, C78 Committee approval of the standard does not necessarily imply that all committee members voted for its approval. At the time it approved this standard, the C78 Committee had the following members:

Ted A. Pickett, Chairman, **C78**
Randolph N. Roy, Secretariat
Joyse Witheridge, Coordinating Editor

| Organization Represented: | Name of Representative: |
|---|---|
| Advance Transformer Company | Ernest Freegard |
| | Norm Grimshaw |
| Canadian Standards Assn. | T.R. Turner |
| Duro-Test Corporation | Herbert Strauss |
| Electrical Testing Laboratories | Anthony DiNiro |
| GE Company | W. H. Henshaw, Jr. |
| | Ted Pickett |
| GTE Products Corporation | Robert Bonazoli |
| | Robert Scoledge (Alt) |
| Illuminating Engineering Society | Mel Unglert |
| | J.E. Kaufman (Alt) |
| Lithonia Lighting | Harry Lobdell |
| OSRAM Corporation | Peter Bleasby |
| Philips Lighting Company | Al Rousseau |
| Wilger Liaison Company, Inc. | Gerald Plank, Jr. |



Copyright National Electrical Manufacturers Association
Provided by IHS under license with NEMA
No reproduction or networking permitted without license from IHS
Not for Resale

## AMERICAN NATIONAL STANDARD C78.40-1992

**Subcommittee C78-4** on High-Intensity Discharge Lamps, which developed this standard, had the following members:

Robert Munson, Chairman

William Alexander
William Alling
Warren Anderson
Emil Birnstein, Jr.
Peter Bleasby
Shep Cohen
Anthony DiNiro
Selmar Dorsey
Joseph Droho
Ernest Freegard
Fritz Friendenstein
Bernard Goshen
John Gross
William Hitchcock
George Johnson
Kenneth Kempel
Robert Kulka
A. Maguire
Ron Marburger
Walter Marquardt
Michael Minarczyk
Kirit Mody
Robert Munson
Pradeep Narachania
Joe Nuckolls
Al Ottenstein
Mike Owens
Richard Parrott
Steven Pasternak
George Pope
Honesto Quioque
Marion Rosiak
Larry Sheinberg
Kenneth Simms
Herbert Strauss
W.T. Wisert
Charles Williams
Dale Work
Ted Yahraus



Copyright National Electrical Manufacturers Association
Provided by IHS under license with NEMA
No reproduction or networking permitted without license from IHS
Not for Resale

**AMERICAN NATIONAL STANDARD** **C78.40-1992**

## ORGANIZATION OF THIS STANDARD

This standard has been arranged in three parts:

**PART I** covers general information. It provides references to other related American National Standards and also offers a brief explanation of the meaning or the application of some of the numerical data given on the individual lamp data sheets in **Part II.**

**Part II** contains an individual data sheet for each size of mercury lamp.

**Part III** contains the maximum outline drawings for each size of lamp.



Copyright National Electrical Manufacturers Association
Provided by IHS under license with NEMA
No reproduction or networking permitted without license from IHS
Not for Resale

# AMERICAN NATIONAL STANDARD C78.40-1992



Copyright National Electrical Manufacturers Association
Provided by IHS under license with NEMA
No reproduction or networking permitted without license from IHS
Not for Resale

# PART I

# GENERAL INFORMATION



Copyright National Electrical Manufacturers Association
Provided by IHS under license with NEMA
No reproduction or networking permitted without license from IHS
Not for Resale

# AMERICAN NATIONAL STANDARD

C78.40-1992



Copyright National Electrical Manufacturers Association
Provided by IHS under license with NEMA
No reproduction or networking permitted without license from IHS
Not for Resale

# MERCURY LAMPS - SPECIFICATIONS

## 1. Scope

This standard sets forth the physical and electrical characteristics of the principal types of mercury lamps. The electrical data given provide the specific basis for the ballast requirements outlined in ANSI C82.4-1992 and ANSI C82.7-1983(R1988).

## 2. Normative References

### 2.1 Referenced American National Standards

This standard is intended for use with the following American National Standards. When these standards are superseded by a revision approved by the American National Standards Institute, Inc, the revision shall apply.

ANSI C78.380-1984, *American National Standard for Electric Lamps -- High Intensity Discharge Lamps -- Method of Designation.*

ANSI C78.386-1983, *American National Standard for Electric Lamps -- Mercury Lamps -- Methods of Measuring Characteristics.*

ANSI C79.1-1980 (R1984), *American National Standard Nomenclature for Glass Bulbs Intended for Use with Electric Lamps.*

ANSI C81.10-1976 (R1982), C82.10a-1979 (R1982), C81.10b-1982 and C82.10d-1986, *American National Standards Specifications for Electric Lamp Bases and Holders - Screw-Shell Types*

ANSI C82.4-1985 and C82.4a-1988, *American National Standard for Ballasts for High-Intensity-Discharge Lamps (Multiple Supply Type).*

ANSI C82.5-1983 and C82.5a-1984, *American National Standard for Reference Ballasts for High-Intensity-Discharge Lamps.*

ANSI C82.7-1988, *American National Standard for Mercury Lamp Transformers -- Constant Current (Series) Supply Type.*



Copyright National Electrical Manufacturers Association
Provided by IHS under license with NEMA
No reproduction or networking permitted without license from IHS Not for Resale

NEMA C78.40 92 ■ 6470247 0506939 477 ■



### 2.2 Related Publication(s)

This publication is not a standard.

SR30a, Special Report, *Procedure for Use in Preparation of Incandescent Lamp Space Drawings*

### 2.3 Other Related Standards

ANSI C82.6-1985 and C82.6a-1985, *American National Standard for Ballasts for High-Intensity Discharge Lamps - Methods of Measurement*

ANSI C82.9-1988, *American National Standard Definitions for High-Intensity Discharge and Low-Pressure Sodium Lamps, Ballasts, and Transformers*

UL 1572, *Standard for Safety, High Intensity Discharge Lighting Fixtures*

21 Code of Federal Regulations, (CFR) 1040.30, *Radiation Safety Performance Standard for Mercury Lamps*

## 3. Lamp Designations

Mercury-lamp designations are assigned in accordance with ANSI C78.380-1984.

## 4. Bulb Designations

Bulb designations are defined in ANSI C79.1-1980(R1984). Due to the long term use of customary designations, they will continue to be used herein. Metric designations for bulbs are not given in this standard.

## 5. Base Specifications

Screw-shell-type bases are specified in ANSI C81.10-1976 (R1982).

## 6. Maximum Outline Drawings

The maximum outline drawings in Part III of this standard show, for each lamp type, the maximum limits of the space that may be occupied by any part of the bulb. The limits shown take into account the possible eccentricity of the bulb with respect to the base. The outline drawings do not show the actual bulb configurations.

## 7. Methods of Measurement

The methods of measuring the electrical characteristics and the bulb and base temperatures of mercury lamps are covered in ANSI C78.386-1989.



Copyright National Electrical Manufacturers Association
Provided by IHS under license with NEMA
No reproduction or networking permitted without license from IHS
Not for Resale

NEMA C78.40 92 6470247 0506940 199



## 8. Electrical Characteristics

### 8.1 Lamp Operating Characteristics

The values of lamp voltage, current, and wattage shown on the individual lamp data sheets in Part II of this standard are those that apply after the lamps have been aged for 100 hours.

The operating voltage of lamps tends to follow a normal distribution pattern. For all lamp types except the 700W H35 and 1000W H36 types, at least 95% of all lamps produced can be expected to have an operating voltage within $\pm$ 10V of nominal. For the 700W H35 and 1000W H36 types, the operating voltage range for 95% of the lamps is $\pm$ 16V from nominal.

The voltage rise to end of life may approximate 1% for each 5000 hours of operation.

### 8.2 Warm-Up Time

Bare lamps operating in still air shall reach 95% of the minimum lamp operating voltage within the time limit and at the ambient temperature and current specified on the applicable lamp data sheet. Lamps shall meet this requirement in the burning position most adverse to warm-up.

## 9. Reference Ballasts

Reference ballasts shall meet the general requirements set forth in ANSI C82.5-1990 and C82.5a-1984.

## 10. Ballast Design

### 10.1 Open-Circuit Voltage

The minimum ballast open-circuit voltages shown on the individual lamp data sheets assure starting and operating reliability as follows: at 10°C (50°F), 98% probability of starting 0-hour lamps; at -15°C (+5°F) and -30°C (-22°F), 90% probability of starting 100-hour lamps.

The voltage values shown on the lamp data sheets apply to sine-wave open-circuit voltages (peak to rms ratio of 1.414). If a higher ratio of peak to rms is provided, up to a value of 1.8, the rms voltage may be decreased below that specified in the data sheets, provided that the peak voltage is increased 1% for each 2% decrease in the rms voltage and that the rms voltage is not reduced below the voltage necessary for stable lamp operation.

### 10.2 Starting Current

Starting current shall be measured 5 to 15 seconds after the lamp circuit has been energized and shall be within the limits shown on the applicable lamp data sheet.



Copyright National Electrical Manufacturers Association
Provided by IHS under license with NEMA
No reproduction or networking permitted without license from IHS
Not for Resale

# AMERICAN NATIONAL STANDARD

# C78.40-1992



Copyright National Electrical Manufacturers Association
Provided by IHS under license with NEMA
No reproduction or networking permitted without license from IHS
Not for Resale

# PART II

# LAMP DATA SHEETS



Copyright National Electrical Manufacturers Association
Provided by IHS under license with NEMA
No reproduction or networking permitted without license from IHS
Not for Resale

# AMERICAN NATIONAL STANDARD C78.40-1992



Copyright National Electrical Manufacturers Association
Provided by IHS under license with NEMA
No reproduction or networking permitted without license from IHS
Not for Resale

AMERICAN NATIONAL STANDARD C78.40-1992

# 40-WATT H45 MERCURY LAMP

Bulb: B17 or E17, ED17, Clear or Phosphor Coated
Base: Medium Screw (E26)

## 1. Lamp Designation

H45EL-40 B17, E17 or ED17 bulb, clear
H45DL-40 B17, E17 or ED17 bulb, phosphor coated

## 2. Physical Characteristics

| | |
|---|---|
| With B17, E17 or ED17 bulb | |
| Nominal diameter | 54 mm (2.125 in) |
| Maximum overall length | 131 mm (5.16 in) |
| Light center length | 80 ± 3 mm (3.13 ± 0.12 in) |
| Arc length | 16 ± 6 mm (0.63 ± 0.24 in) |
| With either of the above sizes | |
| Maximum electrode tip deviation from base axis (apex at base eyelet) | 3 degrees |
| Burning position | Any |
| Max. permissible bulb temperature | 400°C(752°F) |
| Max. permissible base temperature | 190°C(374°F) |
| Maximum outline dimensions | See drawings in Part III |

## 3. Electrical Characteristics

### 3.1 Lamp Operating Characteristics After 100 Hours Aging (See Part I, 8.1)

| | Vertical Base Up | | | Horizontal | | |
|---|---|---|---|---|---|---|
| | Min. | Nom. | Max. | Min. | Nom. | Max. |
| Voltage at lamp terminals (volts, rms) | 80 | 90 | 100 | 83 | 93 | 103 |
| Lamp current (amperes, (rms) | - | 0.530 | - | - | 0.535 | - |
| Lamp wattage (watts) | - | 40 | - | - | 40 | - |

The preceding lamp operating characteristics are based on operation in an ambient temperature of 25°C (77°F), with a 60 Hz sinusoidal power supply and a reference ballast having the characteristics listed in Section 4.



Copyright National Electrical Manufacturers Association
Provided by IHS under license with NEMA
No reproduction or networking permitted without license from IHS
Not for Resale

### 3.2 Warm-Up Time (See Part I, 8.2)

| | |
|---|---|
| Maximum time | 15 minutes |
| Ambient test temperature | 0°C (32°F) |
| Current during test | 0.53 A |

## 4. Reference Ballast Characteristics (See Part I, Section 9)

| | Vertical Lamp Operation | Horizontal Lamp Operation |
|---|---|---|
| Rated input voltage | 180 V | 180 V |
| Reference current | 0.530 A | 0.535 A |
| Impedance | 251 ohms | 244 ohms |
| Power factor | 0.075 ± 0.005 | 0.075 ± 0.005 |

## 5. Information for Ballast Design

### 5.1 Open-Circuit Voltage (See Part I, 10.1) for Vertical and Horizontal Operation

| | Minimum Voltage | |
|---|---|---|
| Temperature | rms | peak |
| 10°C(50°F) | 180 | 255 |
| -15°C(+5°F) | 180 | 255 |
| -30°C(-22°F) | 180 | 255 |

### 5.2 Starting Current (See Part I, 10.2)

| | |
|---|---|
| Minimum current (amperes, rms)* | 0.53 |
| Maximum current (amperes, rms)+ | 1.12 |

*At minimum ballast primary voltage (but not greater than 92% of rated voltage)
+At maximum ballast primary voltage (but not less than 106% of rated voltage)



Copyright National Electrical Manufacturers Association
Provided by IHS under license with NEMA
No reproduction or networking permitted without license from IHS
Not for Resale

### 5.3 Crest Factor of Lamp Operating Current

For either vertical or horizontal operation -- 2.0 max.

### 5.4 Maximum Voltage Across Lamp Terminals

A ballast shall not apply to the lamp terminals a voltage in excess of the following values:

| | Maximum Voltage | |
|---|---|---|
| Duration | rms | peak |
| During first second | - | 750 |
| After first second | 355 | - |

**NOTE:** Some manufacturers have preferred to produce a single lamp that meets both the H45 and H46 lamp standards, sometimes called the H45/46 and may be used interchangeably on either an H45 or H46 ballast.



Copyright National Electrical Manufacturers Association
Provided by IHS under license with NEMA
No reproduction or networking permitted without license from IHS Not for Resale

AMERICAN NATIONAL STANDARD C78.40-1992

# 50-WATT H46 MERCURY LAMP

Bulb: B17, E17 or ED17
Clear or Phosphor Coated
Base: Medium Screw (E26)

## 1. Lamp Designation

| | |
|---|---|
| H46EL-50 | With clear bulb |
| H46DL-50 | With phosphor-coated bulb |

## 2. Physical Characteristics

| | |
|---|---|
| Nominal diameter | 54 mm (2.125 in) |
| Maximum overall length | 131 mm (5.16 in) |
| Light center length | 80 ± 4 mm (3.15 ± 0.16 in) |
| Arc length | 16 ± 2 mm (0.63 ± 0.08 in) |
| With either of the above sizes | |
| Maximum electrode tip deviation from base axis (apex at base eyelet) | 3 degrees |
| Burning position | Any |
| Max. permissible bulb temperature | 400°C(752°F) |
| Max. permissible base temperature | 190°C(374°F) |
| Maximum outline dimensions | See drawings in Part III |

## 3. Electrical Characteristics

### 3.1 Lamp Operating Characteristics After 100 Hours Aging (See Part I, 8.1)

| | Vertical Base Up | | | Horizontal | | |
|---|---|---|---|---|---|---|
| | Min. | Nom. | Max. | Min. | Nom. | Max. |
| Voltage at lamp terminals (volts, rms) | 84 | 95 | 106 | 84 | 95 | 106 |
| Lamp current (amperes, (rms) | - | 0.60 | - | - | 0.60 | - |
| Lamp wattage (watts) | - | 50 | - | - | 50 | - |

The preceding lamp operating characteristics are based on operation in an ambient temperature of 25°C (77°F), with a 60 Hz sinusoidal power supply and a reference ballast having the characteristics listed in Section 4.



Copyright National Electrical Manufacturers Association
Provided by IHS under license with NEMA
No reproduction or networking permitted without license from IHS
Not for Resale

### 3.2 Warm-Up Time (See Part I, 8.2)

| | |
|---|---|
| Maximum time | 15 minutes |
| Ambient test temperature | 0°C (32°F) |
| Current during test | 0.60 A |

### 4. Reference Ballast Characteristics (See Part I, Section 9)

| | Vertical Lamp Operation | Horizontal Lamp Operation |
|---|---|---|
| Rated input voltage | 165 V | 165 V |
| Reference current | 0.60 A | 0.60 A |
| Impedance | 190 ohms | 183 ohms |
| Power factor | 0.075 ± 0.005 | 0.075 ± 0.005 |

### 5. Information for Ballast Design

### 5.1 Open-Circuit Voltage (See Part I, 10.1) for Vertical and Horizontal Operation

| | Minimum Voltage | |
|---|---|---|
| Temperature | rms | peak |
| 10°C(50°F) | 200 | 283 |
| -15°C(+5°F) | 200 | 283 |
| -30°C(-22°F) | 210 | 297 |

### 5.2 Starting Current (See Part I, 10.2)

| | |
|---|---|
| Minimum current (amperes, rms)* | 0.60 |
| Maximum current (amperes, rms)+ | 1.26 |

*At minimum ballast primary voltage (but not greater than 92% of rated voltage)
+At maximum ballast primary voltage (but not less than 106% of rated voltage)



Copyright National Electrical Manufacturers Association
Provided by IHS under license with NEMA
No reproduction or networking permitted without license from IHS Not for Resale

### 5.3 Crest Factor of Lamp Operating Current

For either vertical or horizontal operation -- 2.0 max.

### 5.4 Maximum Voltage Across Lamp Terminals

A ballast shall not apply to the lamp terminals a voltage in excess of the following values:

| | Maximum Voltage | |
|---|---|---|
| Duration | rms | peak |
| During first second | - | 750 |
| After first second | 528 | - |

**NOTE:** Some manufacturers have preferred to produce a single lamp that meets both the H45 and H46 lamp standards, sometimes called the H45/46 and may be used interchangeably on either an H45 or H46 ballast.



Copyright National Electrical Manufacturers Association
Provided by IHS under license with NEMA
No reproduction or networking permitted without license from IHS
Not for Resale

AMERICAN NATIONAL STANDARD C78.40-1992

# 75-WATT H43 MERCURY LAMP

Bulb: B17, E17, or ED17
Clear or Phosphor Coated
Base: Medium screw (E26)

## 1. Lamp Designation

H43AN-75 With clear bulb
H43AV-75 With phosphor-coated bulb

## 2. Physical Characteristics

| | |
|---|---|
| With B17, E17 or ED17 bulb | |
| Nominal diameter | 54 mm (2.125 in) |
| Maximum overall length | 139 mm (5.47 in) |
| Light center length | 89 ± 3 mm (3.5 ± 0.12 in) |
| Arc length | 25 ± 6mm (0.98 ± 0.24 in) |
| With either of the above sizes | |
| Maximum electrode tip deviation from base axis (apex at base eyelet) | 3 degrees |
| Burning position | Any |
| Max. permissible bulb temperature | 400°C(752°F) |
| Max. permissible base temperature | 190°C(374°F) |
| Maximum outline dimensions | See drawings in Part III |

## 3. Electrical Characteristics

### 3.1 Lamp Operating Characteristics After 100 Hours Aging (See Part I, 8.1)

| | Vertical Base Up | | | Horizontal | | |
|---|---|---|---|---|---|---|
| | Min. | Nom. | Max. | Min. | Nom. | Max. |
| Voltage at lamp terminals (volts, rms) | 115 | 130 | 145 | 118 | 133 | 148 |
| Lamp current (amperes, (rms) | - | 0.66 | - | - | 0.66 | - |
| Lamp wattage (watts) | - | 75 | - | - | 75 | - |

The preceding lamp operating characteristics are based on operation in an ambient temperature of 25°C (77°F), with a 60 Hz sinusoidal power supply and a reference ballast having the characteristics listed in Section 4.



Copyright National Electrical Manufacturers Association
Provided by IHS under license with NEMA
No reproduction or networking permitted without license from IHS Not for Resale

### 3.2 Warm-Up Time (See Part I, 8.2)

| | |
|---|---|
| Maximum time | 15 minutes |
| Ambient test temperature | 0°C (32°F) |
| Current during test | 0.66 A |

### 4. Reference Ballast Characteristics (See Part I, Section 9)

| | Vertical Lamp Operation | Horizontal Lamp Operation |
|---|---|---|
| Rated input voltage | 220 V | 220 V |
| Reference current | 0.66 A | 0.66 A |
| Impedance | 226 ohms | 219.5 ohms |
| Power factor | 0.075 ± 0.005 | 0.075 ± 0.005 |

### 5. Information for Ballast Design

### 5.1 Open-Circuit Voltage (See Part I, 10.1) for Vertical and Horizontal Operation

| | Minimum Voltage | |
|---|---|---|
| Temperature | rms | peak |
| 10°C(50°F) | 220 | 311 |
| -15°C(+5°F) | 220 | 311 |
| -30°C(-22°F) | 225 | 318 |

### 5.2 Starting Current (See Part I, 10.2)

| | |
|---|---|
| Minimum current (amperes, rms)* | 0.66 |
| Maximum current (amperes, rms)+ | 1.4 |

*At minimum ballast primary voltage (but not greater than 92% of rated voltage)
+At maximum ballast primary voltage (but not less than 106% of rated voltage)



Copyright National Electrical Manufacturers Association
Provided by IHS under license with NEMA
No reproduction or networking permitted without license from IHS
Not for Resale

### 5.3 Crest Factor of Lamp Operating Current

For either vertical or horizontal operation -- 2.0 max.

### 5.4 Maximum Voltage Across Lamp Terminals

A ballast shall not apply to the lamp terminals a voltage in excess of the following values:

| | Maximum Voltage | |
|---|---|---|
| Duration | rms | peak |
| During first second | - | 750 |
| After first second | 528 | - |



Copyright National Electrical Manufacturers Association
Provided by IHS under license with NEMA
No reproduction or networking permitted without license from IHS
Not for Resale

AMERICAN NATIONAL STANDARD C78.40-1992

# 100-WATT H38 MERCURY LAMP

Bulb: A23, E17, ED17, E23 1/2 or ED23 1/2
Clear or Phosphor Coated
Base: Mogul Screw (E39) or Medium Screw (E26)

## 1. Lamp Designation

| | |
|---|---|
| H38LL-100 | A23 bulb, clear |
| H38MP-100, H38MP-T100 | A23 bulb, phosphor coated |
| H38HT-100, H38HT-T100 | E23 1/2 or ED23 1/2 bulb, clear |
| H38JA-100, H38JA-T100 | E23 1/2 or ED23 1/2 bulb, phosphor coated |
| H38AV-100 | E17 or ED17 bulb |

## 2. Physical Characteristics

| | |
|---|---|
| With A23, E17 or ED17 bulb and medium screw base (E26) | |
| Nominal diameter, E17 or ED17 | 54 mm (2.125 in) |
| Nominal diameter, A23 | 73 mm (2.875 in) |
| Maximum overall length | 139 mm (5.47 in) |
| Light center length | 89 ± 3 mm (3.50 ± 0.12 in) |
| Arc length | 25 ± 6 mm (0.98 ± 0.24 in) |
| Max. permissible bulb temperature | 400°C(752°F) |
| Max. permissible base temperature | 190°C(374°F) |
| With E23 1/2 or ED23 1/2 bulb and mogul screw base (E39) | |
| Nominal diameter | 75 mm (2.938 in) |
| Maximum overall length | 191 mm (7.50 in) |
| Light center length | 127 ± 5 mm (5.00 ± 0.20 in) |
| Arc length | 29 ± 6 mm (1.12 ± 0.24 in) |
| Maximum permissible bulb temperature | 400°C(752°F) |
| Maximum permissible base temperature | 210°C(410°F) |
| For all bulb and base combinations listed above | |
| Maximum electrode tip deviation from base axis (apex at base eyelet) | 3 degrees |
| Burning position | Any |
| Maximum outline dimensions | See drawings in Part III |



Copyright National Electrical Manufacturers Association
Provided by IHS under license with NEMA
No reproduction or networking permitted without license from IHS
Not for Resale

## 3. Electrical Characteristics

### 3.1 Lamp Operating Characteristics After 100 Hours Aging (See Part I, 8.1)

| | Vertical Base Up | | | Horizontal | | |
|---|---|---|---|---|---|---|
| | Min. | Nom. | Max. | Min. | Nom. | Max. |
| Voltage at lamp terminals (volts, rms) | 115 | 130 | 145 | 115 | 130 | 145 |
| Lamp current (amperes, (rms) | - | 0.85 | - | - | 0.88 | - |
| Lamp wattage (watts) | - | 100 | - | - | 100 | - |

The preceding lamp operating characteristics are based on operation in an ambient temperature of 25°C (77°F), with a 60 Hz sinusoidal power supply and a reference ballast having the characteristics listed in Section 4.

### 3.2 Warm-Up Time (See Part I, 8.2)

| | |
|---|---|
| Maximum time | 15 minutes |
| Ambient test temperature | 0°C (32°F) |
| Current during test | 0.85 A |

## 4. Reference Ballast Characteristics (See Part I, Section 9)

| | Vertical Lamp Operation | Horizontal Lamp Operation |
|---|---|---|
| Rated input voltage | 220 V | 220 V |
| Reference current | 0.85 A | 0.88 A |
| Impedance | 170 ohms | 168 ohms |
| Power factor | 0.075 $\pm$ 0.005 | 0.075 $\pm$ 0.005 |



Copyright National Electrical Manufacturers Association
Provided by IHS under license with NEMA
No reproduction or networking permitted without license from IHS
Not for Resale

## 5. Information for Ballast Design

### 5.1 Open-Circuit Voltage (See Part I, 10.1) for Vertical and Horizontal Operation

| Temperature | Minimum Voltage rms | peak |
|---|---|---|
| 10°C(50°F) | 220 | 311 |
| -15°C(+5°F) | 220 | 311 |
| -30°C(-22°F) | 225 | 318 |

### 5.2 Starting Current (See Part I, 10.2)

| | |
|---|---|
| Minimum current (amperes, rms)* | 0.85 |
| Maximum current (amperes, rms)+ | 1.85 |

*At minimum ballast primary voltage (but not greater than 92% of rated voltage)
+At maximum ballast primary voltage (but not less than 106% of rated voltage)

### 5.3 Crest Factor of Lamp Operating Current

For either vertical or horizontal operation -- 2.0 max.

### 5.4 Maximum Voltage Across Lamp Terminals

A ballast shall not apply to the lamp terminals a voltage in excess of the following values:

| Duration | Maximum Voltage rms | peak |
|---|---|---|
| During first second | - | 1100 |
| After first second | 528 | - |



Copyright National Electrical Manufacturers Association
Provided by IHS under license with NEMA
No reproduction or networking permitted without license from IHS Not for Resale

AMERICAN NATIONAL STANDARD C78.40-1992

# 100-WATT H44 MERCURY LAMP

Bulb: PAR38 Reflector or T10 Clear

Base: Admedium Skirted Screw
Admedium Screw
Medium Skirted Screw

## 1. Lamp Designation

| | |
|---|---|
| H44GS-100 | PAR38 reflector spotlight |
| H44JM-100 | PAR38 reflector floodlight |
| H44AB-100 | T10 bulb, clear |

| | |
|---|---|
| With PAR-38 bulb, admedium skirted base, and medium skirted base | |
| Nominal diameter | 121 mm (4.75 in) |
| Maximum overall length | 138 mm (5.438 in) |
| Light center length | Not specified |
| Arc length | 29 $\pm$ 6 mm (1.12 $\pm$ 0.24 in) |
| With T10 bulb and admedium base | |
| Nominal diameter | 32 mm (1.25 in) |
| Maximum overall length | 143 mm (5.625 in) |
| Light center length | 87 $\pm$ 4 mm (3.44 $\pm$ 0.16 in) |
| Arc length | 29 $\pm$ 6 mm (1.12 $\pm$ 0.24 in) |
| For both bulb and base combinations listed above | |
| Maximum electrode tip deviation from base axis (apex at base eyelet) | 3 degrees |
| Burning position | Any |
| Maximum permissible bulb temperature | 400°C(752°F) |
| Maximum permissible base temperature | 190°C(374°F) |
| Maximum outline dimensions | See drawing in Part III |



Copyright National Electrical Manufacturers Association
Provided by IHS under license with NEMA
No reproduction or networking permitted without license from IHS
Not for Resale

## 3. Electrical Characteristics

### 3.1 Lamp Operating Characteristics After 100 Hours Aging (See Part I, 8.1)

| | Vertical Base Up | | | Horizontal | | |
|---|---|---|---|---|---|---|
| | Min. | Nom. | Max. | Min. | Nom. | Max. |
| Voltage at lamp terminals (volts, rms) | 115 | 130 | 145 | 115 | 130 | 145 |
| Lamp current (amperes, (rms) | - | 0.85 | - | - | 0.88 | - |
| Lamp wattage (watts) | - | 100 | - | - | 100 | - |

The preceding lamp operating characteristics are based on operation in an ambient temperature of 25°C (77°F), with a 60 Hz sinusoidal power supply and a reference ballast having the characteristics listed in Section 4.

### 3.2 Warm-Up Time (See Part I, 8.2)

| | |
|---|---|
| Maximum time | 15 minutes |
| Ambient test temperature | 0°C (32°F) |
| Current during test | 0.85 A |

## 4. Reference Ballast Characteristics (See Part I, Section 9)

| | Vertical Lamp Operation | Horizontal Lamp Operation |
|---|---|---|
| Rated input voltage | 220 V | 220 V |
| Reference current | 0.85 A | 0.88 A |
| Impedance | 170 ohms | 168 ohms |
| Power factor | 0.075 $\pm$ 0.005 | 0.075 $\pm$ 0.005 |

## 5. Information for Ballast Design

### 5.1 Open-Circuit Voltage (See Part I, 10.1) for Vertical and Horizontal Operation



Copyright National Electrical Manufacturers Association
Provided by IHS under license with NEMA
No reproduction or networking permitted without license from IHS
Not for Resale

| Temperature | Minimum Voltage rms | peak |
|---|---|---|
| 10°C(50°F) | 220 | 311 |
| -15°C(+5°F) | 220 | 311 |
| -30°C(-22°F) | 225 | 318 |

### 5.2 Starting Current (See Part I, 10.2)

| | |
|---|---|
| Minimum current (amperes, rms)* | 0.85 |
| Maximum current (amperes, rms)+ | 1.85 |

*At minimum ballast primary voltage (but not greater than 92% of rated voltage)
+At maximum ballast primary voltage (but not less than 106% of rated voltage)

### 5.3 Crest Factor of Lamp Operating Current

For either vertical or horizontal operation -- 2.0 max.

### 5.4 Maximum Voltage Across Lamp Terminals

A ballast shall not apply to the lamp terminals a voltage in excess of the following values:

| Duration | Maximum Voltage rms | peak |
|---|---|---|
| During first second | - | 750 |
| After first second | 528 | - |



Copyright National Electrical Manufacturers Association
Provided by IHS under license with NEMA
No reproduction or networking permitted without license from IHS Not for Resale

## 175-WATT H39 MERCURY

Bulb: BT28 or ED28
Clear or Phosphor Coated
Base: Mogul Screw (E39)

### 1. Lamp Designation

| | |
|---|---|
| H39KB-175, H39KB-T175 | With clear bulb |
| H39KC-175, H39KC-T175 | With phosphor-coated bulb |

### 2. Physical Characteristics

| | |
|---|---|
| Nominal diameter | 90 mm (3.54 in) |
| Maximum overall length | 211 mm (8.312 in) |
| Light center length | 127 ± 5 mm (5.0 ± 0.20 in) |
| Arc length | 48 ± 10 mm (1.89 ± 0.39 in) |
| Maximum electrode tip deviation from base axis (apex at base eyelet) | 3 degrees |
| Burning position | Any |
| Maximum permissible bulb temperature | 400°C(752°F) |
| Maximum permissible base temperature | 210°C(410°F) |
| Maximum outline dimensions | See drawings in Part III |

### 3. Electrical Characteristics

### 3.1 Lamp Operating Characteristics After 100 Hours Aging (See Part I, 8.1)

| | Vertical Base Up | | | Horizontal | | |
|---|---|---|---|---|---|---|
| | Min. | Nom. | Max. | Min. | Nom. | Max. |
| Voltage at lamp terminals (volts, rms) | 115 | 130 | 145 | 113 | 128 | 143 |
| Lamp current (amperes, (rms) | - | 1.5 | - | - | 1.55 | - |
| Lamp wattage (watts) | - | 175 | - | - | 175 | - |

The preceding lamp operating characteristics are based on operation in an ambient temperature of 25°C (77°F), with a 60 Hz sinusoidal power supply and a reference ballast having the characteristics listed in Section 4.



Copyright National Electrical Manufacturers Association
Provided by IHS under license with NEMA
No reproduction or networking permitted without license from IHS
Not for Resale

### 3.2 Warm-Up Time (See Part I, 8.2)

| | |
|---|---|
| Maximum time | 15 minutes |
| Ambient test temperature | 0°C (32°F) |
| Current during test | 1.5 A |

### 4. Reference Ballast Characteristics (See Part I, Section 9)

| | Vertical Lamp Operation | Horizontal Lamp Operation |
|---|---|---|
| Rated input voltage | 220 V | 220 V |
| Reference current | 1.5 A | 1.55 A |
| Impedance | 99.5 ohms | 97.5 ohms |
| Power factor | 0.075 ± 0.005 | 0.075 ± 0.005 |

### 5. Information for Ballast Design

### 5.1 Open-Circuit Voltage (See Part I, 10.1) for Vertical and Horizontal Operation

| | Minimum Voltage | |
|---|---|---|
| Temperature | rms | peak |
| 10°C(50°F) | 210 | 297 |
| -15°C(+5°F) | 210 | 297 |
| -30°C(-22°F) | 225 | 318 |

### 5.2 Starting Current (See Part I, 10.2)

| | |
|---|---|
| Minimum current (amperes, rms)* | 1.5 |
| Maximum current (amperes, rms)+ | 3.25 |

*At minimum ballast primary voltage (but not greater than 92% of rated voltage)

+At maximum ballast primary voltage (but not less than 106% of rated voltage)



Copyright National Electrical Manufacturers Association
Provided by IHS under license with NEMA
No reproduction or networking permitted without license from IHS
Not for Resale

### 5.3 Crest Factor of Lamp Operating Current

For either vertical or horizontal operation -- 2.0 max.

### 5.4 Maximum Voltage Across Lamp Terminals

A ballast shall not apply to the lamp terminals a voltage in excess of the following values:

| | Maximum Voltage | |
|---|---|---|
| Duration | rms | peak |
| During first second | - | 1100 |
| After first second | 528 | - |



Copyright National Electrical Manufacturers Association
Provided by IHS under license with NEMA
No reproduction or networking permitted without license from IHS
Not for Resale

AMERICAN NATIONAL STANDARD C78.40-1992

# 250-WATT H37 MERCURY LAMP

Bulb: BT28 or ED28
Clear or Phosphor Coated
Base: Mogul screw (E39)

## 1. Lamp Designation

| | |
|---|---|
| H37KB-250, H37KB-T250 | With clear bulb |
| H37KC-250, H37KC-T250 | With phosphor-coated bulb |

## 2. Physical Characteristics

| | |
|---|---|
| Nominal diameter | 90 mm (3.54 in) |
| Maximum overall length | 211 mm (8.312 in) |
| Light center length | 127 ± 5 mm (5.0 ± 0.20 in) |
| Arc length | 57 ± 10 mm (2.24 ± 0.39 in) |
| Maximum electrode tip deviation from base axis (apex at base eyelet) | 3 degrees |
| Burning position | Any |
| Maximum permissible bulb temperature | 400°C(752°F) |
| Maximum permissible base temperature | 210°C(410°F) |
| Maximum outline dimensions | See drawings in Part III |

## 3. Electrical Characteristics

### 3.1 Lamp Operating Characteristics After 100 Hours Aging (See Part I, 8.1)

| | Vertical Base Up | | | Horizontal | | |
|---|---|---|---|---|---|---|
| | Min. | Nom. | Max. | Min. | Nom. | Max. |
| Voltage at lamp terminals (volts, rms) | 115 | 130 | 145 | 114 | 129 | 144 |
| Lamp current (amperes, (rms) | - | 2.1 | - | - | 2.15 | - |
| Lamp wattage (watts) | - | 250 | - | - | 250 | - |

The preceding lamp operating characteristics are based on operation in an ambient temperature of 25°C (77°F), with a 60 Hz sinusoidal power supply and a reference ballast having the characteristics listed in Section 4.



Copyright National Electrical Manufacturers Association
Provided by IHS under license with NEMA
No reproduction or networking permitted without license from IHS
Not for Resale

### 3.2 Warm-Up Time (See Part I, 8.2)

| | |
|---|---|
| Maximum time | 15 minutes |
| Ambient test temperature | 0°C (32°F) |
| Current during test | 2.1 A |

### 4. Reference Ballast Characteristics (See Part I, Section 9)

| | Vertical Lamp Operation | Horizontal Lamp Operation |
|---|---|---|
| Rated input voltage | 220 V | 220 V |
| Reference current | 2.1 A | 2.15 A |
| Impedance | 70.8 ohms | 69.3 ohms |
| Power factor | 0.075 ± 0.005 | 0.075 ± 0.005 |

### 5. Information for Ballast Design

### 5.1 Open-Circuit Voltage (See Part I, 10.1) for Vertical and Horizontal Operation

| | Minimum Voltage | |
|---|---|---|
| Temperature | rms | peak |
| 10°C(50°F) | 198 | 280 |
| -15°C(+5°F) | 210 | 297 |
| -30°C(-22°F) | 225 | 318 |

### 5.2 Starting Current (See Part I, 10.2)

| | |
|---|---|
| Minimum current (amperes, rms)* | 2.1 |
| Maximum current (amperes, rms)+ | 4.5 |

*At minimum ballast primary voltage (but not greater than 92% of rated voltage)
+At maximum ballast primary voltage (but not less than 106% of rated voltage)



Copyright National Electrical Manufacturers Association
Provided by IHS under license with NEMA
No reproduction or networking permitted without license from IHS
Not for Resale

### 5.3 Crest Factor of Lamp Operating Current

For either vertical or horizontal operation -- 2.0 max.

### 5.4 Maximum Voltage Across Lamp Terminals

A ballast shall not apply to the lamp terminals a voltage in excess of the following values:

| | Maximum Voltage | |
|---|---|---|
| Duration | rms | peak |
| During first second | - | 1100 |
| After first second | 528 | - |



Copyright National Electrical Manufacturers Association
Provided by IHS under license with NEMA
No reproduction or networking permitted without license from IHS
Not for Resale

## 400-WATT H33 MERCURY LAMP

Bulb: BT37 or ED37
Clear or Phosphor Coated
Base: Mogul Screw (E39)

### 1. Lamp Designation

| | |
|---|---|
| H33CD-400, H33CD-T400 | With clear bulb |
| H33GL-400, H33GL-T400 | With phosphor-coated bulb |

### 2. Physical Characteristics

| | |
|---|---|
| Nominal diameter | 118 mm (4.63 in) |
| Maximum overall length | 292 mm (11.5 in) |
| Light center length | 178 ± 6 mm (7.0 ± 0.24 in) |
| Arc length | 70 ± 10 mm (2.754 ±0.39 in) |
| Maximum electrode tip deviation from base axis (apex at base eyelet) | 3 degrees |
| Burning position | Any |
| Maximum permissible bulb temperature | 400°C(752°F) |
| Maximum permissible base temperature | 210°C(410°F) |
| Maximum outline dimensions | See drawings in Part III |

### 3. Electrical Characteristics

### 3.1 Lamp Operating Characteristics After 100 Hours Aging (See Part I, 8.1)

| | Vertical Base Up | | | Horizontal | | |
|---|---|---|---|---|---|---|
| | Min. | Nom. | Max. | Min. | Nom. | Max. |
| Voltage at lamp terminals (volts, rms) | 120 | 135 | 150 | 115 | 130 | 145 |
| Lamp current (amperes, (rms) | - | 3.2 | - | - | 3.4 | - |
| Lamp wattage (watts) | - | 400 | - | - | 400 | - |

The preceding lamp operating characteristics are based on operation in an ambient temperature of 25°C (77°F), with a 60 Hz sinusoidal power supply and a reference ballast having the characteristics listed in Section 4.



Copyright National Electrical Manufacturers Association
Provided by IHS under license with NEMA
No reproduction or networking permitted without license from IHS
Not for Resale

### 3.2 Warm-Up Time (See Part I, 8.2)

| | |
|---|---|
| Maximum time | 15 minutes |
| Ambient test temperature | 0°C (32°F) |
| Current during test | 3.1A |

## 4. Reference Ballast Characteristics (See Part I, Section 9)

| | Vertical Lamp Operation | Horizontal Lamp Operation |
|---|---|---|
| Rated input voltage | 220 V | 220 V |
| Reference current | 3.2 A | 3.4 A |
| Impedance | 44.8 ohms | 44.2 ohms |
| Power factor | 0.075 ± 0.005 | 0.075 ± 0.005 |

## 5. Information for Ballast Design

### 5.1 Open-Circuit Voltage (See Part I, 10.1) for Vertical and Horizontal Operation

| | Minimum Voltage | |
|---|---|---|
| Temperature | rms | peak |
| 10°C(50°F) | 198 | 280 |
| -15°C(+5°F) | 210 | 297 |
| -30°C(-22°F) | 225 | 318 |

### 5.2 Starting Current (See Part I, 10.2)

| | |
|---|---|
| Minimum current (amperes, rms)* | 3.1 |
| Maximum current (amperes, rms)+ | 7.5 |

*At minimum ballast primary voltage (but not greater than 92% of rated voltage)
+At maximum ballast primary voltage (but not less than 106% of rated voltage)



Copyright National Electrical Manufacturers Association
Provided by IHS under license with NEMA
No reproduction or networking permitted without license from IHS Not for Resale

## 5.3 Crest Factor of Lamp Operating Current

For either vertical or horizontal operation 2.0 max.

## 5.4 Maximum Voltage Across Lamp Terminals

A ballast shall not apply to the lamp terminals a voltage in excess of the following values:

| | Maximum Voltage | |
|---|---|---|
| Duration | rms | peak |
| During first second | - | 2150 |
| After first second | 528 | - |



Copyright National Electrical Manufacturers Association
Provided by IHS under license with NEMA
No reproduction or networking permitted without license from IHS
Not for Resale

AMERICAN NATIONAL STANDARD C78.40-1992

# 700-WATT H35 MERCURY LAMP

Bulb: BT46
Clear or Phosphor Coated
Base: Mogul Screw (E39)

## 1. Lamp Designation

| | |
|---|---|
| H35NA-700 | With clear bulb |
| H35ND-700 | With phosphor-coated bulb |

## 2. Physical Characteristics

| | |
|---|---|
| Nominal diameter | 146 mm (5.75 in) |
| Maximum overall length | 368 mm (14.5 in) |
| Light center length | 241 ± 10 mm (9.49 ± 0.39 in) |
| Arc length | 127 ± 13 mm (5.0 ± 0.51 in) |
| Maximum electrode tip deviation from base axis (apex at base eyelet) | 3 degrees |
| Burning position | Any |
| Maximum permissible bulb temperature | 400°C(752°F) |
| Maximum permissible base temperature | 210°C(410°F) |
| Maximum outline dimensions | See drawings in Part III |

## 3. Electrical Characteristics

### 3.1 Lamp Operating Characteristics After 100 Hours Aging (See Part I, 8.1)

| | Vertical Base Up | | | Horizontal | | |
|---|---|---|---|---|---|---|
| | Min. | Nom. | Max. | Min. | Nom. | Max. |
| Voltage at lamp terminals (volts, rms) | 240 | 265 | 290 | 225 | 250 | 275 |
| Lamp current (amperes, (rms) | - | 2.8 | - | - | 3.05 | - |
| Lamp wattage (watts) | - | 700 | - | - | 700 | - |

The preceding lamp operating characteristics are based on operation in an ambient temperature of 25°C (77°F), with a 60 Hz sinusoidal power supply and a reference ballast having the characteristics listed in Section 4.



Copyright National Electrical Manufacturers Association
Provided by IHS under license with NEMA
No reproduction or networking permitted without license from IHS
Not for Resale

### 3.2 Warm-Up Time (See Part I, 8.2)

| | |
|---|---|
| Maximum time | 15 minutes |
| Ambient test temperature | 0°C (32°F) |
| Current during test | 2.8 A |

### 4. Reference Ballast Characteristics (See Part I, Section 9)

| | Vertical Lamp Operation | Horizontal Lamp Operation |
|---|---|---|
| Rated input voltage | 460 V | 460 V |
| Reference current | 2.8 A | 3.05 A |
| Impedance | 112 ohms | 108.5 ohms |
| Power factor | 0.075 ± 0.005 | 0.075 ± 0.005 |

### 5. Information for Ballast Design

### 5.1 Open-Circuit Voltage (See Part I, 10.1) for Vertical and Horizontal Operation

| | Minimum Voltage | |
|---|---|---|
| Temperature | rms | peak |
| 10°C(50°F) | 375 | 530 |
| -15°C(+5°F) | 375 | 530 |
| -30°C(-22°F) | 390 | 552 |

### 5.2 Starting Current (See Part I, 10.2)

| | |
|---|---|
| Minimum current (amperes, rms)* | 2.8 |
| Maximum current (amperes, rms)+ | 6.7 |

*At minimum ballast primary voltage (but not greater than 92% of rated voltage)
+At maximum ballast primary voltage (but not less than 106% of rated voltage)



Copyright National Electrical Manufacturers Association
Provided by IHS under license with NEMA
No reproduction or networking permitted without license from IHS Not for Resale

## 5.3 Crest Factor of Lamp Operating Current

For either vertical or horizontal operation -- 2.0 max.

## 5.4 Maximum Voltage Across Lamp Terminals

A ballast shall not apply to the lamp terminals a voltage in excess of the following values:

| | Maximum Voltage | |
|---|---|---|
| Duration | rms | peak |
| During first second | - | 2150 |
| After first second | 800 | - |



Copyright National Electrical Manufacturers Association
Provided by IHS under license with NEMA
No reproduction or networking permitted without license from IHS Not for Resale

# 1000-WATT H34 MERCURY LAMP

Bulb: BT56
Clear or Phosphor Coated
Base: Mogul Screw (E39)

## 1. Lamp Designation

| | |
|---|---|
| H34GV-1000 | With clear bulb |
| H34GW-1000 | With phosphor-coated bulb |
| H34KY-1000 | With bulb partially coated with phosphor (Semi-reflector) |

## 2. Physical Characteristics

| | |
|---|---|
| Nominal diameter | 178 mm (7.0 in) |
| Maximum overall length | 391 mm (15.375 in) |
| Light center length | 241 ± 10 mm (9.49 ± 0.39 in) |
| Arc length | 136 ± 13 mm (5.35 ± 0.51 in) |
| Maximum electrode tip deviation from base axis (apex at base eyelet) | 3 degrees |
| Burning position | Any |
| Maximum permissible bulb temperature | 400°C(752°F) |
| Maximum permissible base temperature | 210°C(410°F) |
| Maximum outline dimensions | See drawings in Part III |

## 3. Electrical Characteristics

### 3.1 Lamp Operating Characteristics After 100 Hours Aging (See Part I, 8.1)

| | Vertical Base Up | | | Horizontal | | |
|---|---|---|---|---|---|---|
| | Min. | Nom. | Max. | Min. | Nom. | Max. |
| Voltage at lamp terminals (volts, rms) | 120 | 135 | 150 | 119 | 134 | 149 |
| Lamp current (amperes, (rms) | - | 8.0 | - | - | 8.1 | - |
| Lamp wattage (watts) | - | 1000 | - | - | 1000 | - |

The preceding lamp operating characteristics are based on operation in an ambient temperature of 25°C (77°F), with a 60 Hz sinusoidal power supply and a reference ballast having the characteristics listed in Section 4.



Copyright National Electrical Manufacturers Association
Provided by IHS under license with NEMA
No reproduction or networking permitted without license from IHS
Not for Resale

### 3.2 Warm-Up Time (See Part I, 8.2)

| | |
|---|---|
| Maximum time | 15 minutes |
| Ambient test temperature | 0°C (32°F) |
| Current during test | 8.0 A |

### 4. Reference Ballast Characteristics (See Part I, Section 9)

| | Vertical Lamp Operation | Horizontal Lamp Operation |
|---|---|---|
| Rated input voltage | 220 V | 220 V |
| Reference current | 8.0 A | 8.1 A |
| Impedance | 18.2 ohms | 18.2 ohms |
| Power factor | 0.075 ± 0.005 | 0.075 ± 0.005 |

### 5. Information for Ballast Design

### 5.1 Open-Circuit Voltage (See Part I, 10.1) for Vertical and Horizontal Operation

| | Minimum Voltage | |
|---|---|---|
| Temperature | rms | peak |
| 10°C(50°F) | 200 | 283 |
| -15°C(+5°F) | 325 | 460 |
| -30°C(-22°F) | 390 | 552 |

### 5.2 Starting Current (See Part I, 10.2)

| | |
|---|---|
| Minimum current (amperes, rms)* | 8.0 |
| Maximum current (amperes, rms)+ | 17.8 |

*At minimum ballast primary voltage (but not greater than 92% of rated voltage)
+At maximum ballast primary voltage (but not less than 106% of rated voltage)



Copyright National Electrical Manufacturers Association
Provided by IHS under license with NEMA
No reproduction or networking permitted without license from IHS
Not for Resale

### 5.3 Crest Factor of Lamp Operating Current

For either vertical or horizontal operation -- 2.0 max.

### 5.4 Maximum Voltage Across Lamp Terminals

A ballast shall not apply to the lamp terminals a voltage in excess of the following values:

| | Maximum Voltage | |
|---|---|---|
| Duration | rms | peak |
| During first second | - | 2150 |
| After first second | 528 | - |



Copyright National Electrical Manufacturers Association
Provided by IHS under license with NEMA
No reproduction or networking permitted without license from IHS
Not for Resale

AMERICAN NATIONAL STANDARD C78.40-1992

# 1000-WATT H36 MERCURY LAMP

Bulb: BT56
Clear or Phosphor Coated
Base: Mogul Screw (E39)

## 1. Lamp Designation

| | |
|---|---|
| H36GV-1000, H36GV-T1000 | With clear bulb |
| H36GW-1000, H36GW-T1000 | With phosphor-coated bulb |
| H36KY-1000 | With bulb partially coated with phosphor (semi-reflector) |

## 2. Physical Characteristics

| | |
|---|---|
| Nominal diameter | 178 mm (7.0 in) |
| Maximum overall length | 391 mm (15.375 in) |
| Light center length | 241 ± 10 mm (9.49 ± 0.39 in) |
| Arc length | 152 ± 13 mm (5.98 ± 0.51 in) |
| Maximum electrode tip deviation from base axis (apex at base eyelet) | 3 degrees |
| Burning position | Any |
| Maximum permissible bulb temperature | 400°C(752°F) |
| Maximum permissible base temperature | 210°C(410°F) |
| Maximum outline dimensions | See drawings in Part III |

## 3. Electrical Characteristics

### 3.1 Lamp Operating Characteristics After 100 Hours Aging (See Part I, 8.1)

| | Vertical Base Up | | | Horizontal | | |
|---|---|---|---|---|---|---|
| | Min. | Nom. | Max. | Min. | Nom. | Max. |
| Voltage at lamp terminals (volts, rms) | 240 | 265 | 290 | 227 | 252 | 277 |
| Lamp current (amperes, (rms) | - | 4.0 | - | - | 4.3 | - |
| Lamp wattage (watts) | - | 1000 | - | - | 1000 | - |

The preceding lamp operating characteristics are based on operation in an ambient temperature of 25°C (77°F), with a 60 Hz sinusoidal power supply and a reference ballast having the characteristics listed in Section 4.



Copyright National Electrical Manufacturers Association
Provided by IHS under license with NEMA
No reproduction or networking permitted without license from IHS
Not for Resale

### 3.2 Warm-Up Time (See Part I, 8.2)

| | |
|---|---|
| Maximum time | 15 minutes |
| Ambient test temperature | 0°C (32°F) |
| Current during test | 4.0 A |

### 4. Reference Ballast Characteristics (See Part I, Section 9)

| | Vertical Lamp Operation | Horizontal Lamp Operation |
|---|---|---|
| Rated input voltage | 460 V | 460 V |
| Reference current | 4.0 A | 4.3 A |
| Impedance | 80.0 ohms | 77.3 ohms |
| Power factor | 0.075 ± 0.005 | 0.075 ± 0.005 |

### 5. Information for Ballast Design

### 5.1 Open-Circuit Voltage (See Part I, 10.1) for Vertical and Horizontal Operation

| | Minimum Voltage | |
|---|---|---|
| Temperature | rms | peak |
| 10°C(50°F) | 375 | 530 |
| -15°C(+5°F) | 375 | 530 |
| -30°C(-22°F) | 390 | 552 |

### 5.2 Starting Current (See Part I, 10.2)

| | |
|---|---|
| Minimum current (amperes, rms)* | 4.0 |
| Maximum current (amperes, rms)+ | 9.5 |

*At minimum ballast primary voltage (but not greater than 92% of rated voltage)
+At maximum ballast primary voltage (but not less than 106% of rated voltage)



Copyright National Electrical Manufacturers Association
Provided by IHS under license with NEMA
No reproduction or networking permitted without license from IHS Not for Resale

### 5.3 Crest Factor of Lamp Operating Current

For either vertical or horizontal operation -- 2.0 max.

### 5.4 Maximum Voltage Across Lamp Terminals

A ballast shall not apply to the lamp terminals a voltage in excess of the following values:

| Duration | Maximum Voltage rms | Maximum Voltage peak |
|---|---|---|
| During first second | - | 2150 |
| After first second | 800 | - |



Copyright National Electrical Manufacturers Association
Provided by IHS under license with NEMA
No reproduction or networking permitted without license from IHS
Not for Resale

# AMERICAN NATIONAL STANDARD C78.40-1992



Copyright National Electrical Manufacturers Association
Provided by IHS under license with NEMA
No reproduction or networking permitted without license from IHS
Not for Resale

# PART III

# MAXIMUM OUTLINE DRAWINGS



Copyright National Electrical Manufacturers Association
Provided by IHS under license with NEMA
No reproduction or networking permitted without license from IHS
Not for Resale

Copyright National Electrical Manufacturers Association
Provided by IHS under license with NEMA
No reproduction or networking permitted without license from IHS
Not for Resale

# MAXIMUM OUTLINE DRAWING

(All Dimensions in Millimeters)

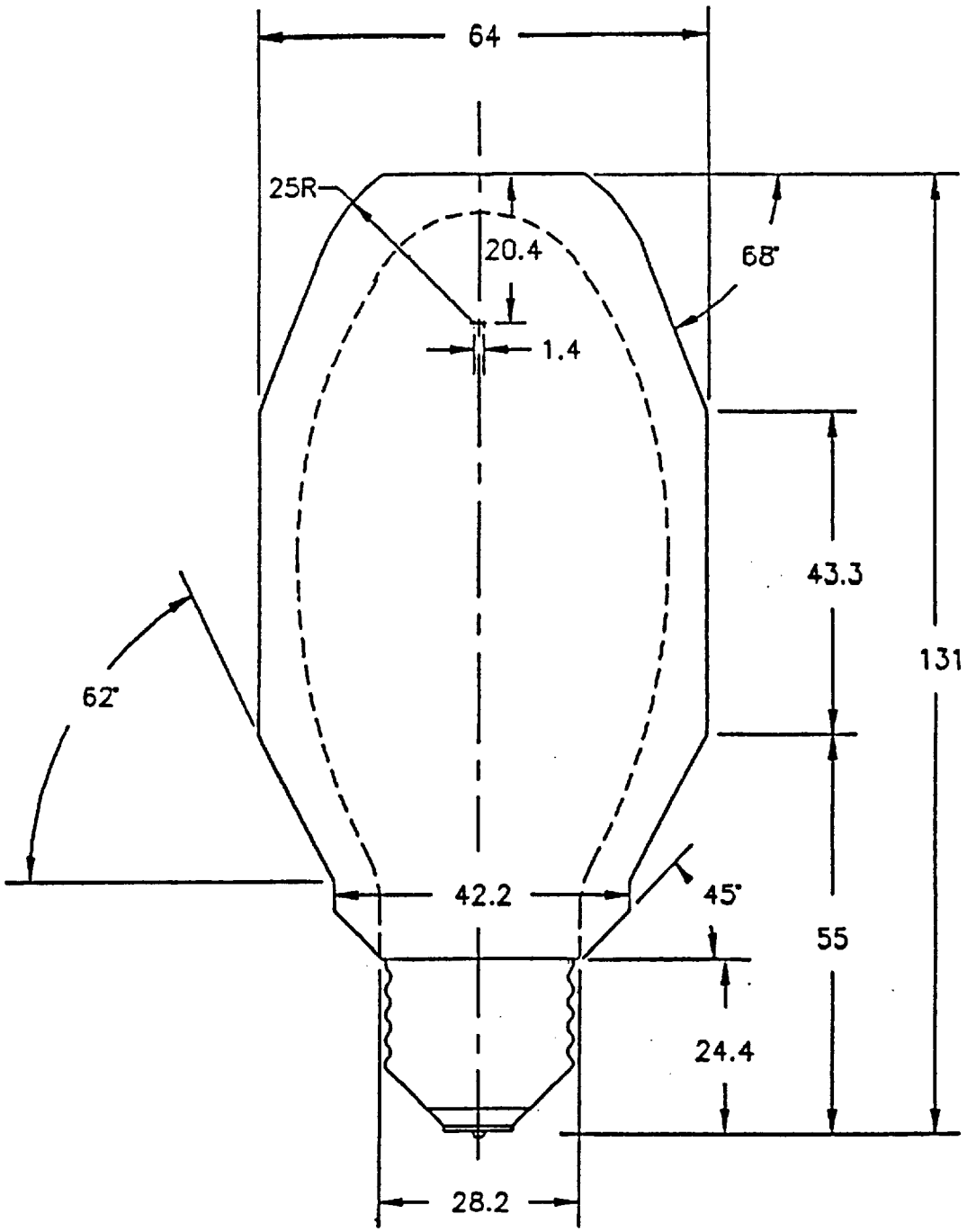




BULB: BD17, ED17, B17, E17
BASE: MEDIUM SCREW (E26)
MOL: 131
ECCENTRICITY: 3°

Copyright National Electrical Manufacturers Association
Provided by IHS under license with NEMA
No reproduction or networking permitted without license from IHS
Not for Resale

10 APR 90
REV. 2

# MAXIMUM OUTLINE DRAWING

(All Dimensions in Millimeters)

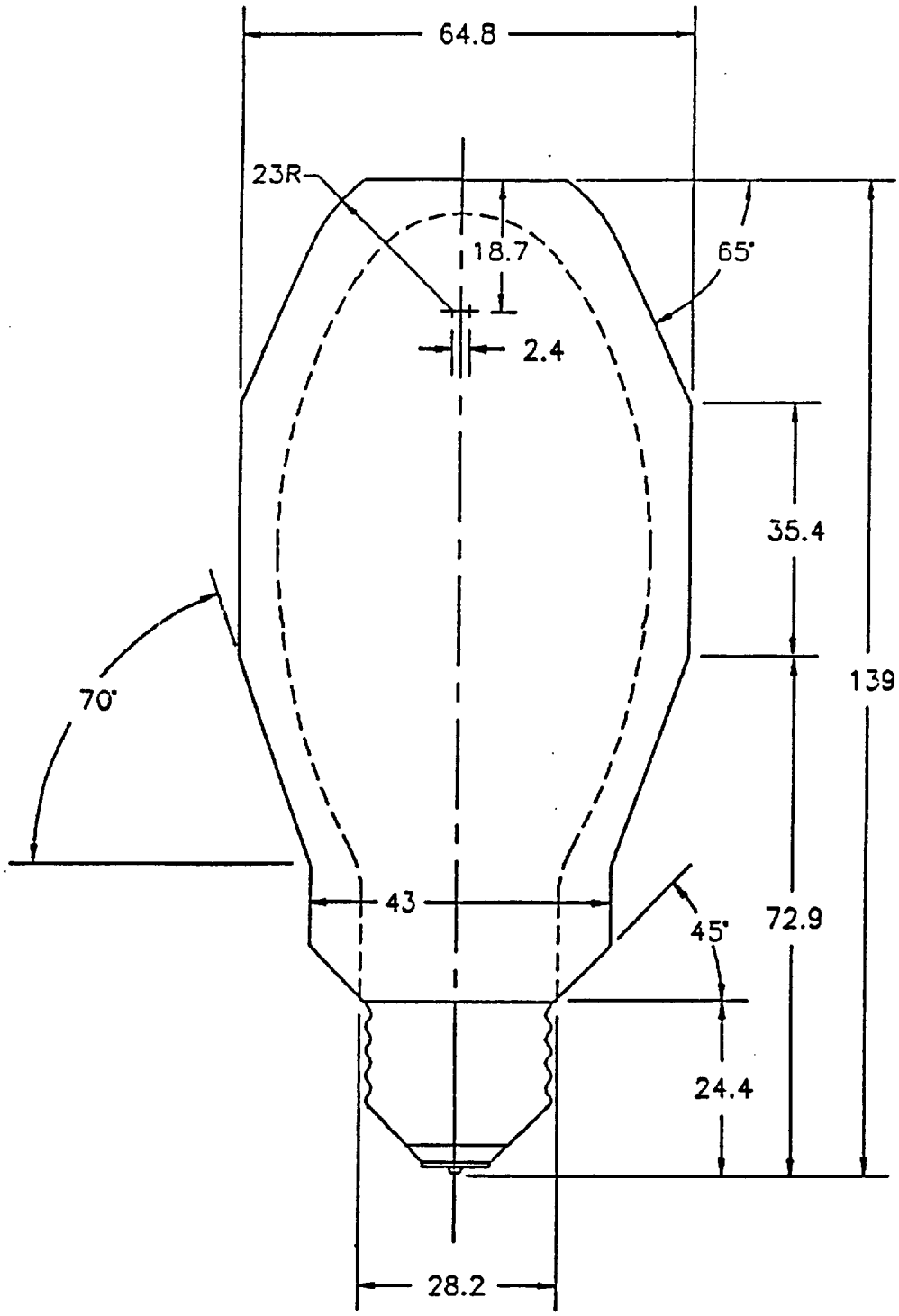


BULB: BD17, ED17, B17, E17
BASE: MEDIUM SCREW (E26)
MOL: 139
MIN. OAL: 130
VERTICALITY: 3°



Copyright National Electrical Manufacturers Association
Provided by IHS under license with NEMA
No reproduction or networking permitted without license from IHS
Not for Resale

# MAXIMUM OUTLINE DRAWING

## (All Dimensions in Millimeters)

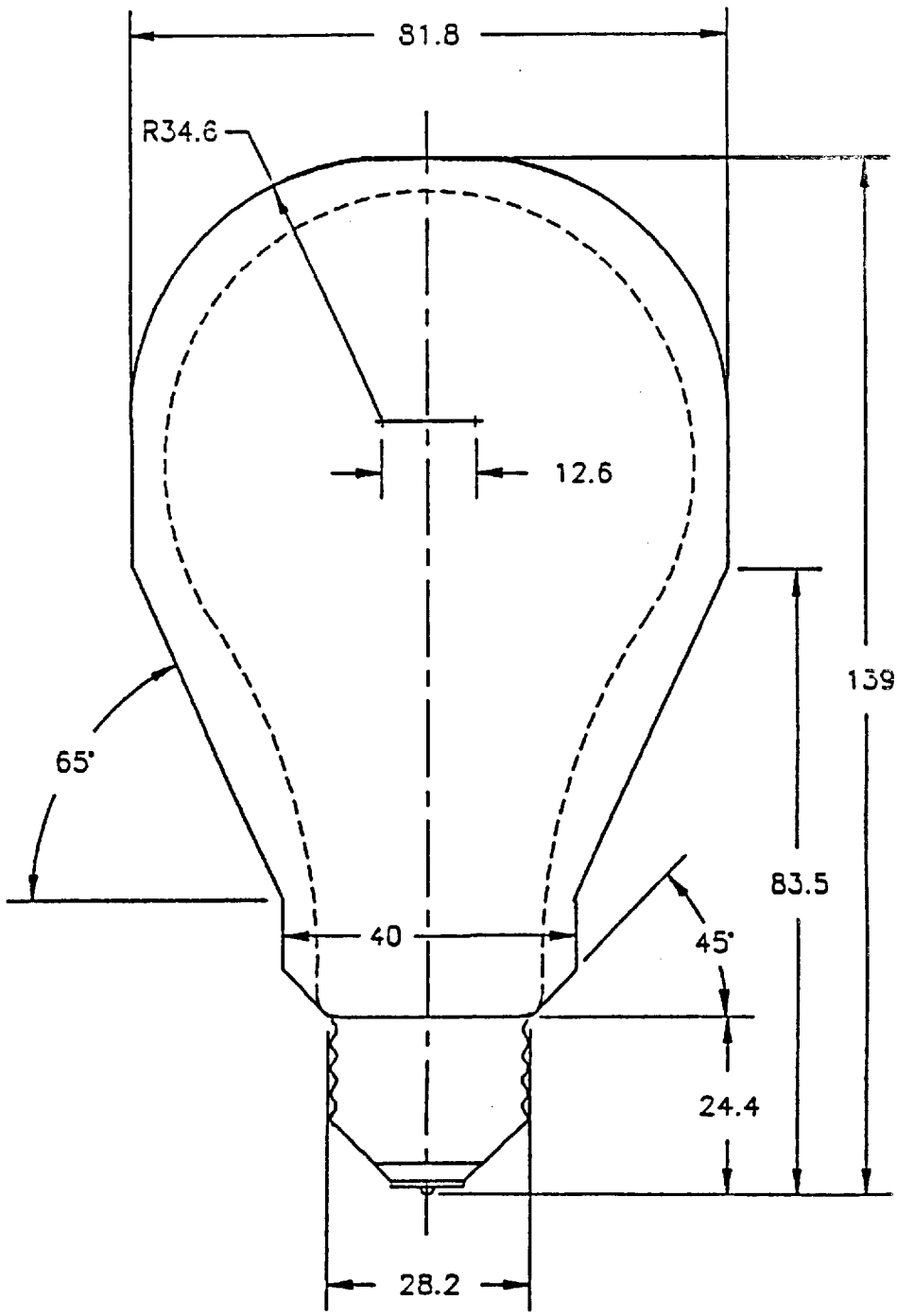




BULB: A23
BASE: MEDIUM SCREW (E26)
MOL: 139
MIN. OAL: 130

Copyright National Electrical Manufacturers Association
Provided by IHS under license with NEMA
No reproduction or networking permitted without license from IHS
Not for Resale

10 APR 90
REV. 2

# MAXIMUM OUTLINE DRAWING

(All Dimensions in Millimeters)

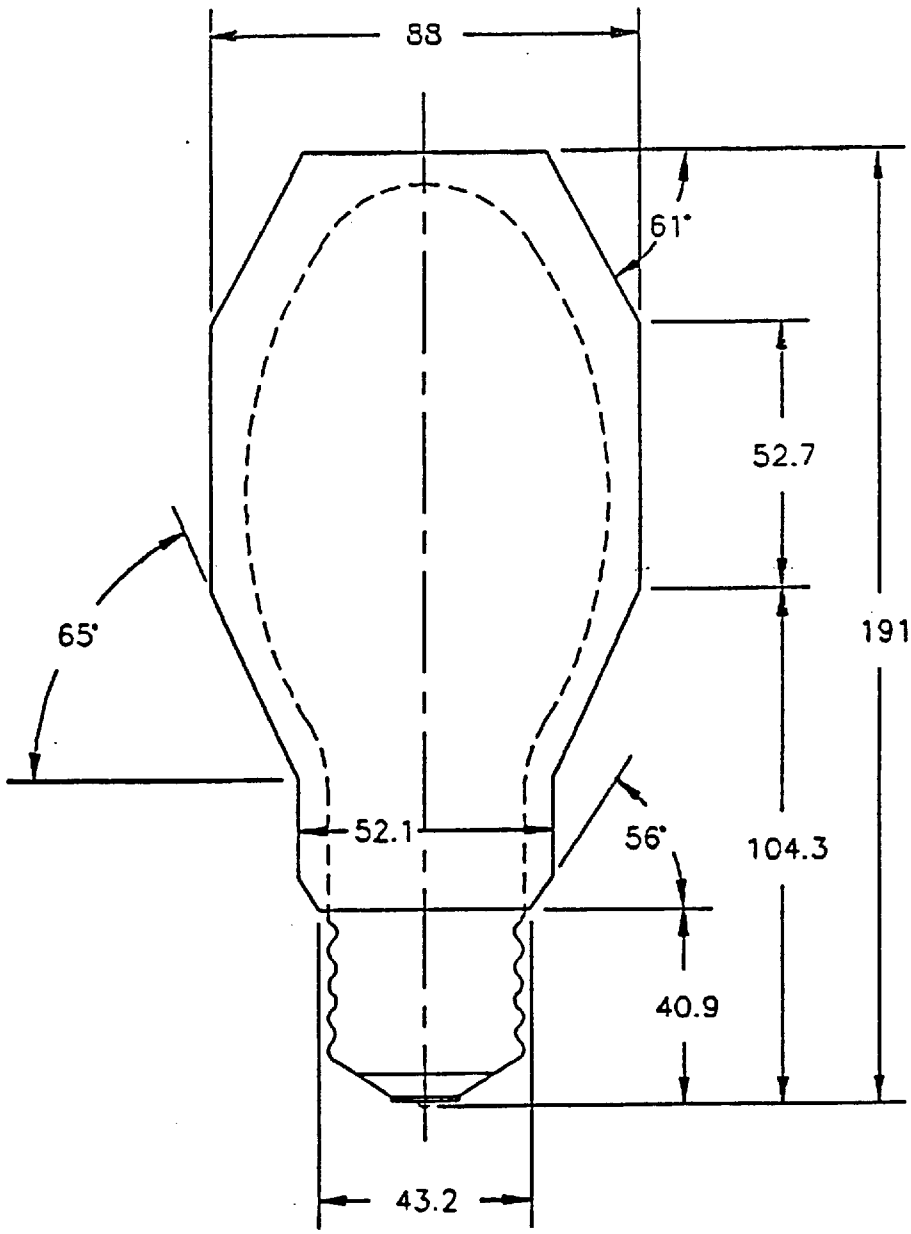




BULB: ED23.5
BASE: MOGUL SCREW (E39)
[illegible] 91
[illegible] 30
ECCENTRICITY: 3°

Copyright National Electrical Manufacturers Association
Provided by IHS under license with NEMA
No reproduction or networking permitted without license from IHS
Not for Resale

10 APR 90
REV. 2

# MAXIMUM OUTLINE DRAWING

## (All Dimensions in Millimeters)

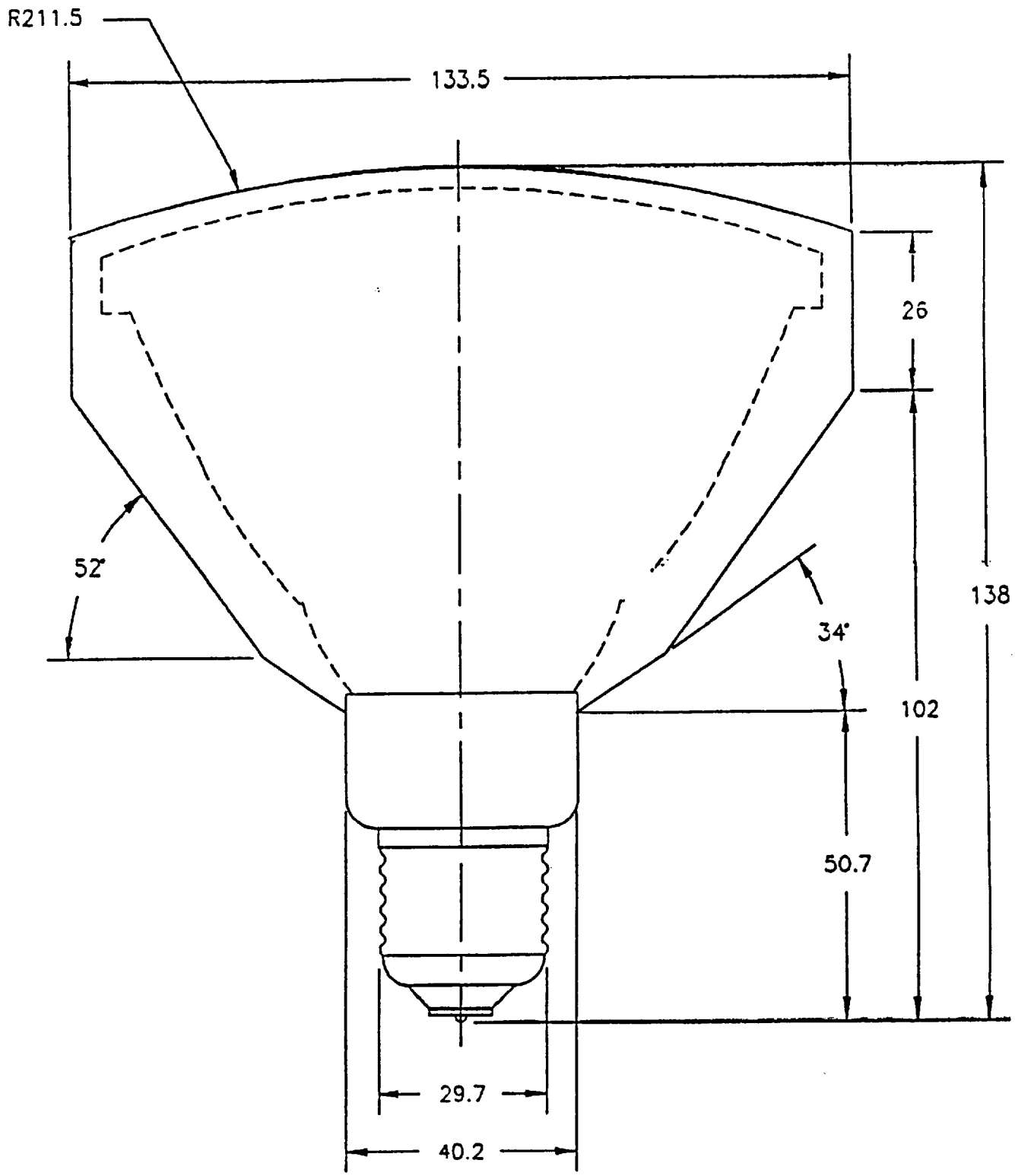


BULB: PAR38 REFLECTOR SPOTLIGHT, PAR38 REFLECTOR FLOODLIGHT
BASE: ADMEDIUM SKIRTED SCREW
MOL: 138
MIN. OAL: 132



10 APR 90
REV. 2

Copyright National Electrical Manufacturers Association
Provided by IHS under license with NEMA
No reproduction or networking permitted without license from IHS
Not for Resale

# MAXIMUM OUTLINE DRAWING

## (All Dimensions in Millimeters)

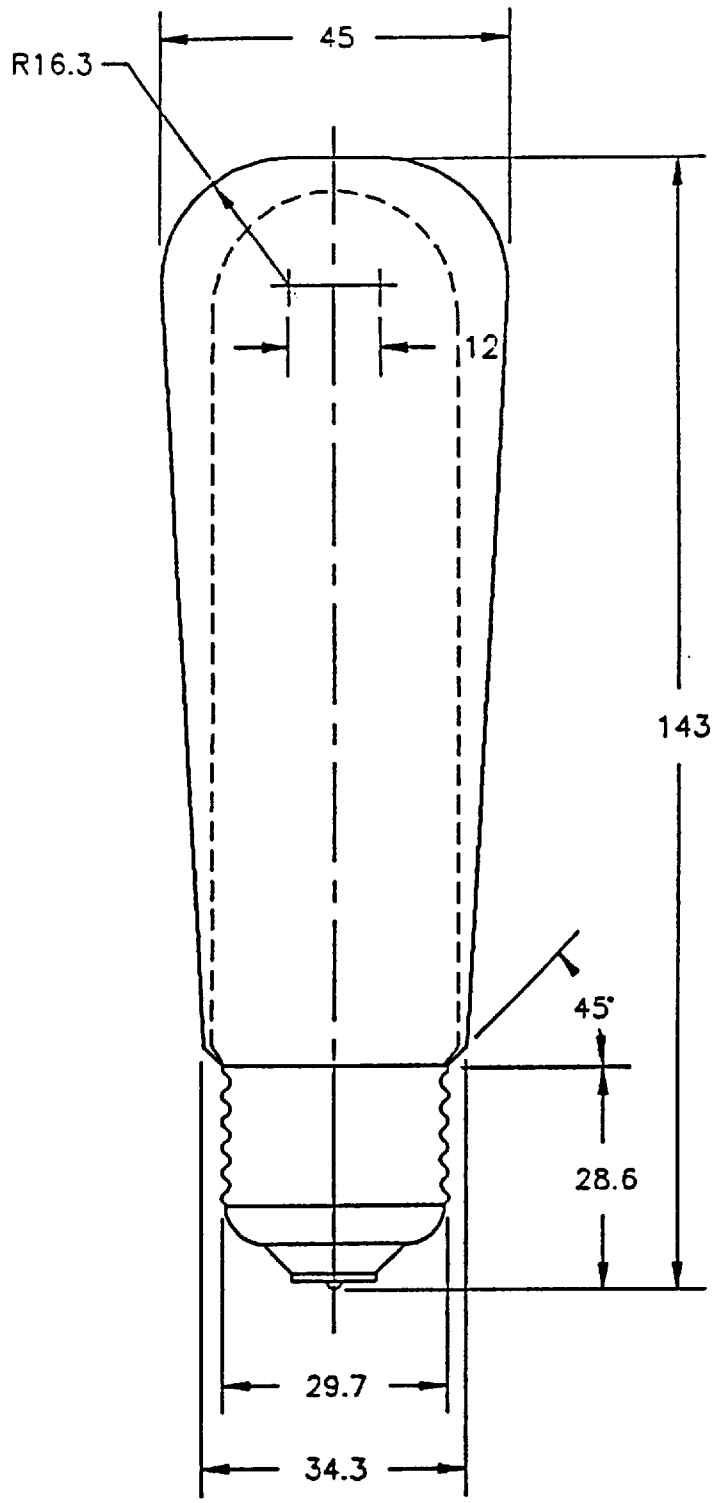




BULB: T10
BASE: ADMEDIUM
MOL: 143

Copyright National Electrical Manufacturers Association
Provided by IHS under license with NEMA
No reproduction or networking permitted without license from IHS
Not for Resale

10 APR 90
REV. 2

# MAXIMUM OUTLINE DRAWING

## (All Dimensions in Millimeters)

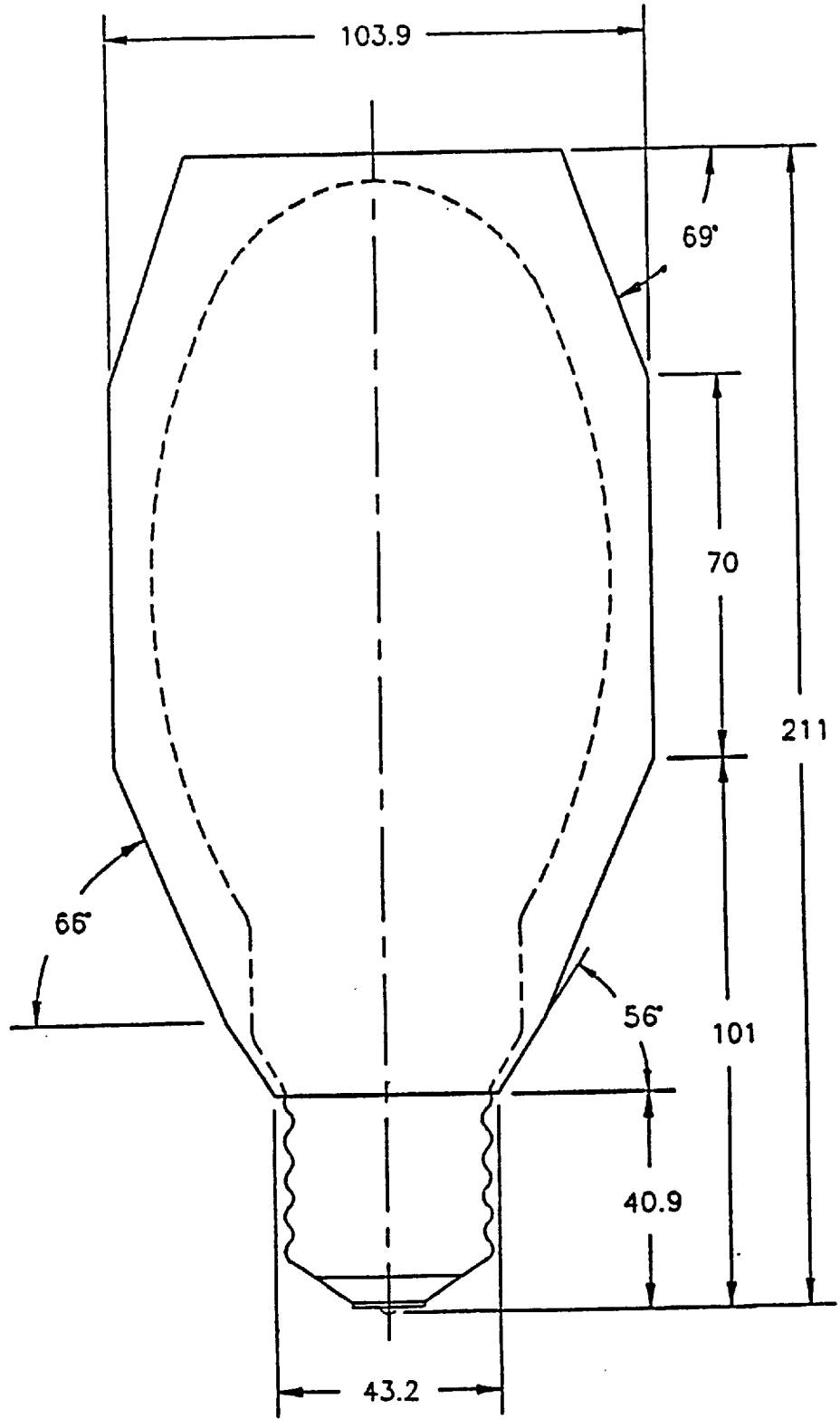


53

BULB: BT28, E28, ED28
BASE: MOGUL SCREW (E39)
MOL: 211
MIN. OAL: 202

10 APR 90
REV. 2

Copyright National Electrical Manufacturers Association
Provided by IHS under license with NEMA
No reproduction or networking permitted without license from IHS

Not for Resale

# MAXIMUM OUTLINE DRAWING

(All Dimensions in Millimeters)

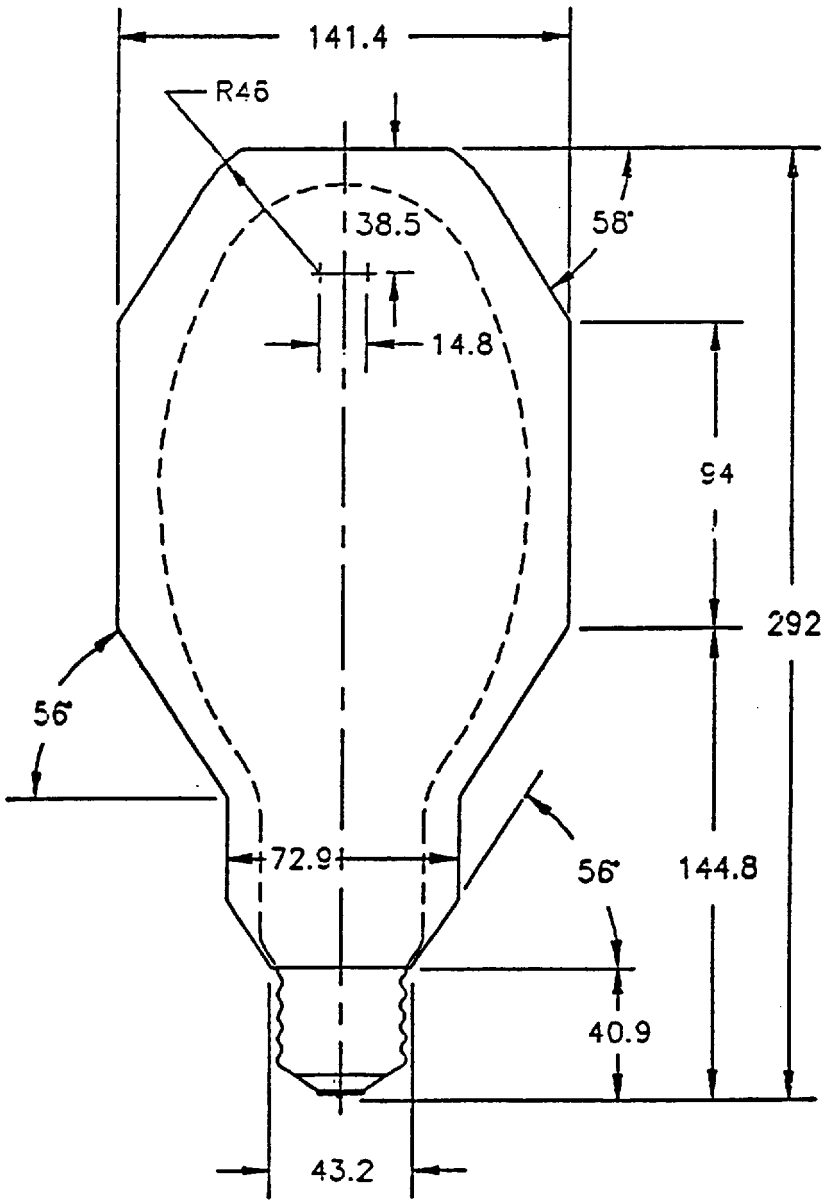




BULB: BT37, ED37, E37
BASE: MOGUL SCREW (E39)
MOL: 292
MIN. OAL: 278
[illegible]ICITY: 3°

10 APR 90
REV. 2

Copyright National Electrical Manufacturers Association
Provided by IHS under license with NEMA
No reproduction or networking permitted without license from IHS
Not for Resale

# MAXIMUM OUTLINE DRAWING
(All Dimensions in Millimeters)

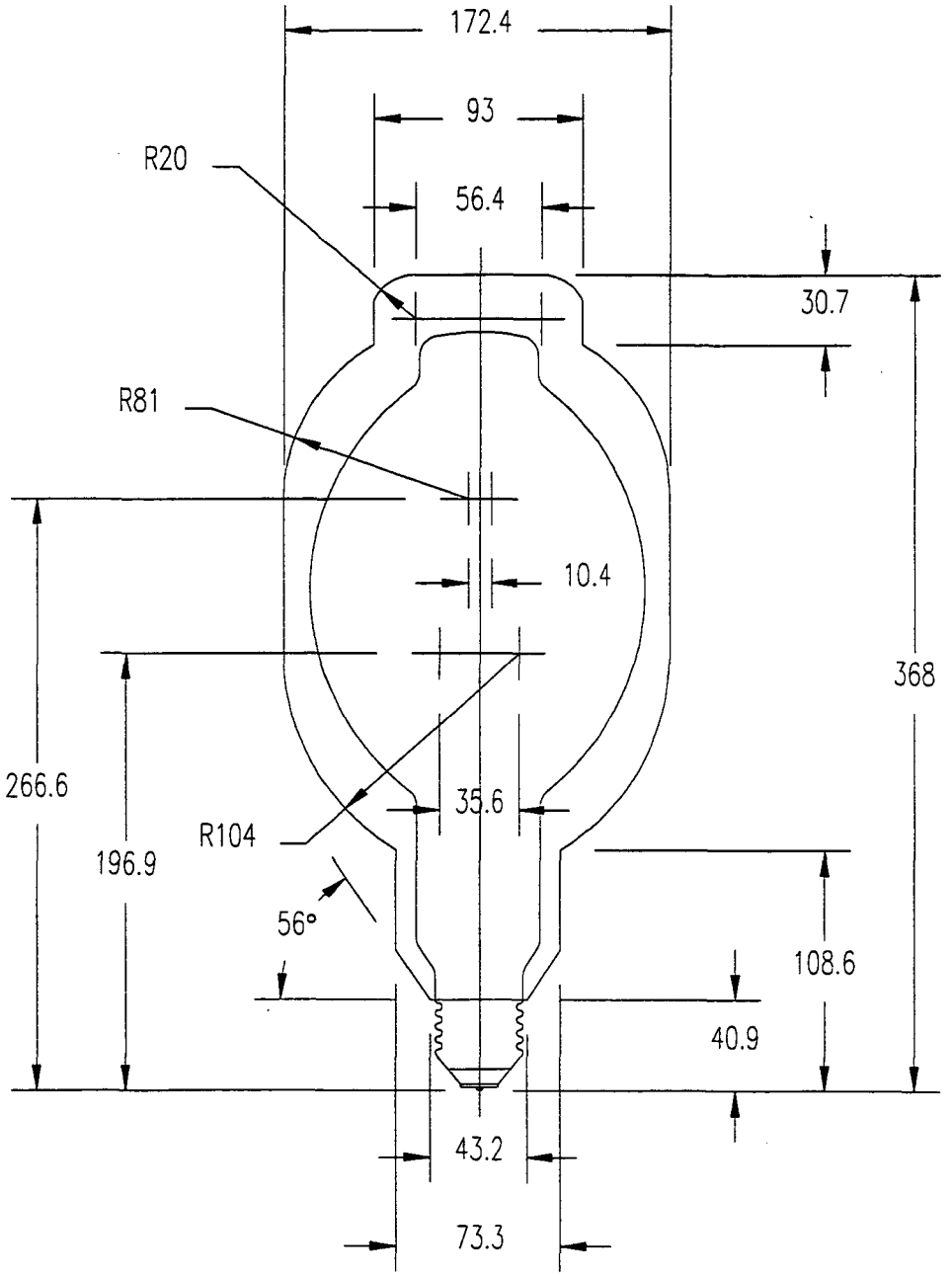


BULB: BT46
BASE: MOGUL SCREW (E39)
MOL: 368
MIN. OAL: 325
ECCENTRICITY: 3°

SCALE = 1 : 3
10 APR 90
REVISION 2

Copyright © 1998 by National Electrical Manufacturers Association
1300 North 17th Street, Suite 1847, Rosslyn, VA 22209



Copyright National Electrical Manufacturers Association
Provided by IHS under license with NEMA
No reproduction or networking permitted without license from IHS
Not for Resale

# MAXIMUM OUTLINE DRAWING

(ALL DIMENSIONS IN MILLIMETERS)

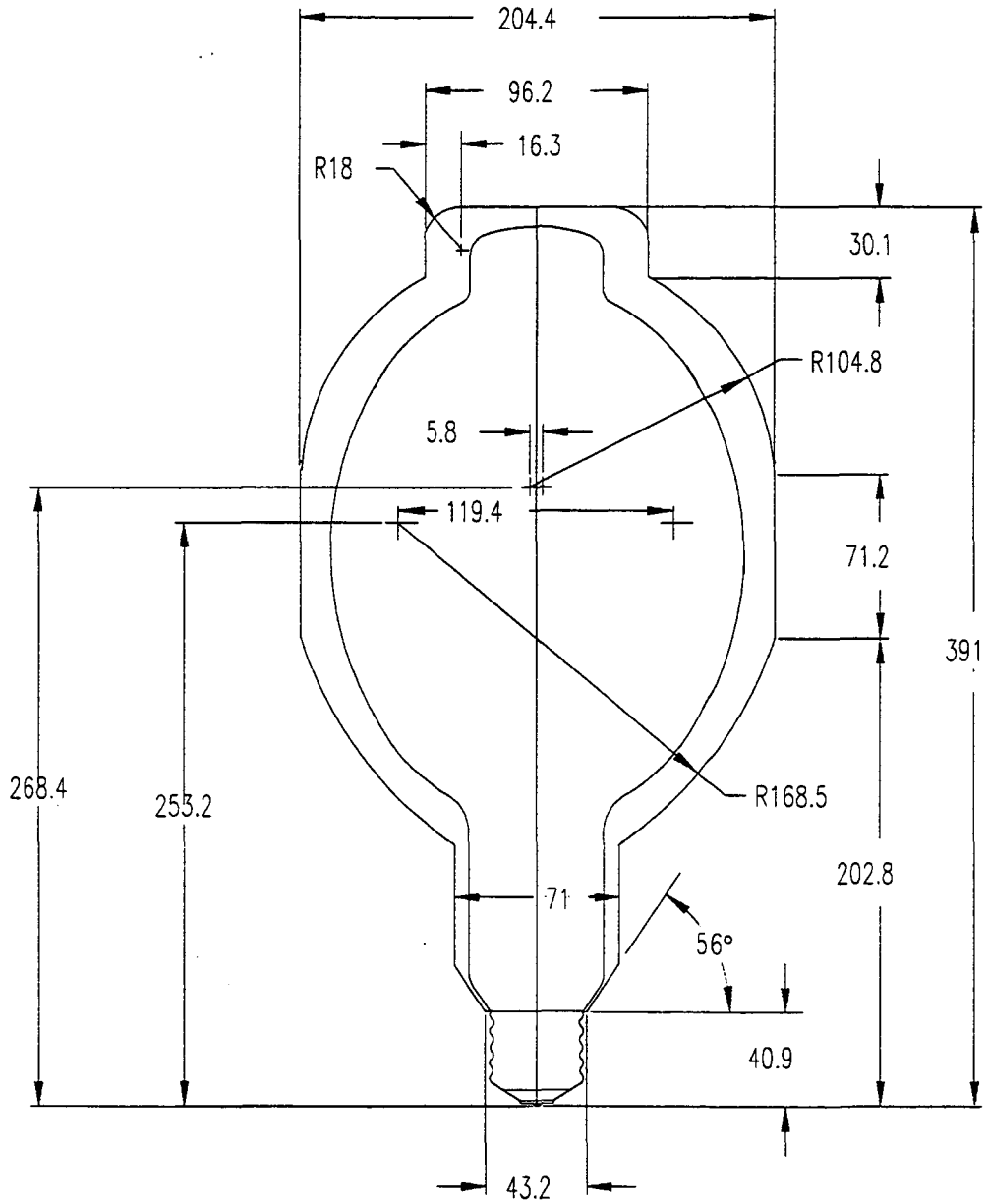


BULB: BT56
BASE: MOGUL SCREW (E39)
MOL: 391
MIN. OAL: 374
ECCENTRICITY: 3°

16-DEC-96
REV. 3


Copyright © 1998 by National Electrical Manufacturers Association
1300 North 17th Street, Suite 1847, Rosslyn, VA 22209

First Edition
September 1998

Copyright National Electrical Manufacturers Association
Provided by IHS under license with NEMA
No reproduction or networking permitted without license from IHS
Not for Resale