ANSI C78.4d-1998
Supplement to ANSI C78.4-1995

American National Standard

Approved February 20, 1998 | Secretariat: National Electrical Manufacturers Association

for electric lamps—

Preheat-Start Types— Dimensional and Electrical Characteristics— 15W, 20W and 27W Single-Ended Quad Tube Fluorescent Lamps with Internal Means of Starting with GX32d Bases

An American National Standard implies a consensus of those substantially concerned with its scope and provisions. It is intended as a guide to aid the manufacturer, the consumer, and the general public. The existence of an American National Standard does not in any respect preclude anyone, whether he has approved the standard or not, from manufacturing, marketing, purchasing, or using products, processes, or procedures not conforming to the standards. Users are cautioned to obtain the latest editions.
The American National Standards Institute does not develop standards and will in no circumstances give an interpretation of any American National Standard. Moreover, no person shall have the right or authority to issue an interpretation of an American National Standard in the name of the American National Standards Institute.
CAUTION NOTICE: This American National Standard may be revised or withdrawn at any time. The procedures of the American National Standards Institute require that action be taken periodically to reaffirm, revise, or withdraw this standard. Purchasers of American National Standards may receive current information on all standards by calling or writing the American National Standards Institute.

Copyright © 1998 by Secretariat, ASC C78
1300 North 17th Street, Suite 1847, Rosslyn, VA 22209

First Edition
March 1998

Copyright National Electrical Manufacturers Association
Provided by IHS under license with NEMA
No reproduction or networking permitted without license from IHS
Not for Resale

ANSI C78.4d-1998
Supplement to ANSI C78.4-1995

American National Standard

Approval of an American National Standard requires verification by ANSI that the requirements for due process, consensus, and other criteria for approval have been met by the standards developer. An American National Standard implies a consensus of those substantially concerned with its scope and provisions. Consensus is established when, in the judgment of the ANSI Board of Standards Review, substantial agreement has been reached by directly and materially affected interests. Substantial agreement means much more than a simple majority, but not necessarily unanimity. Consensus requires that all views and objections be considered, and that a concerted effort be made toward their resolution. The existence of an American National Standard does not in any respect preclude anyone, whether he has approved the standard or not, from manufacturing, marketing, purchasing, or using products, processes, or procedures not conforming to the standards. It is intended as a guide to aid the manufacturer, the consumer, and the general public.

The American National Standards Institute does not develop standards and will in no circumstances give an interpretation of any American National Standard. Moreover, no person shall have the right or authority to issue an interpretation of an American National Standard in the name of the American National Standards Institute. Requests for interpretations should be addressed to the secretariat or sponsor whose name appears on this title page.

CAUTION NOTICE: This American National Standard may be revised or withdrawn at any time. The procedures of the American National Standards Institute require that action be taken periodically to reaffirm, revise, or withdraw this standard. Purchasers of American National Standards may receive current information on all standards by calling or writing the American National Standards Institute.

Published by:
National Electrical Manufacturers Association

Copyright © 1998 by the Secretariat, C78, National Electrical Manufacturers Association
1300 North 17th Street, Suite 1847, Rosslyn, VA 22209

No part of this publication may be reproduced in any form,
in an electronic retrieval system or otherwise, without
prior written permission of the publisher.

Printed in the United States of America

Copyright © 1998 by Secretariat, ASC C78
1300 North 17th Street, Suite 1847, Rosslyn, VA 22209

First Edition
March 1998

Copyright National Electrical Manufacturers Association
Provided by IHS under license with NEMA
No reproduction or networking permitted without license from IHS
Not for Resale

ANSI C78.4d-1998
Supplement to ANSI C78.4-1995

15 Watt, Single-Ended, Quad Tube Preheat-Start Fluorescent Lamp with Internal Means of Starting

LAMP ABBREVIATION: 15W/6T5/Q/GX32/PH

Nominal Wattage: 15

Nominal Dimensions:	OAL	WIDTH	DEPTH
	142 mm	40 mm	40 mm

Bulb: See Figure 1

Base Type: GX32d-1

Base Dimensions: Base dimensions may be found in American National Standards for electric lamp bases and holders, ANSI C81.61-1990 (R1996).

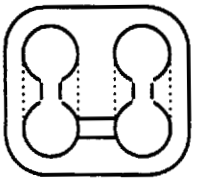

Top View

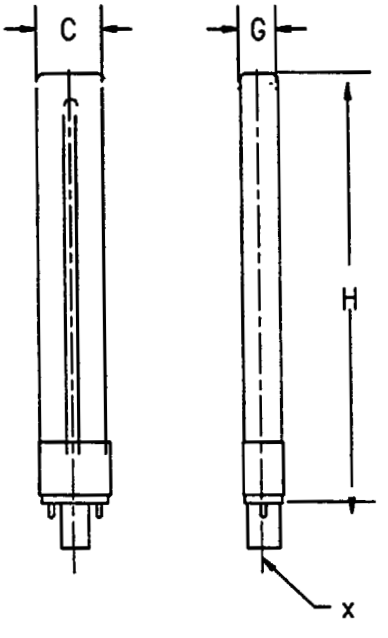

Figure 1

Copyright © 1998 by Secretariat, ASC C78
1300 North 17th Street, Suite 1847, Rosslyn, VA 22209

First Edition
March 1998

Copyright National Electrical Manufacturers Association
Provided by IHS under license with NEMA
No reproduction or networking permitted without license from IHS
Not for Resale

DIMENSIONAL CHARACTERISTICS

		Maximum Lamp Dim. (mm)	Maximum Lamp Outline Dim. (mm)
H	Base face to top of lamp	117	117
C	Width of lamp	41 (NOTE 1)	45 (NOTE 2)
G	Depth of lamp	41 (NOTE 1)	45 (NOTE 2)

NOTE 1: Applies to glass length only.
NOTE 2: Max. lamp outline dimensions, take into consideration bulb/base misalignment.

ELECTRICAL CHARACTERISTICS

Electrical characteristics and light output vary with ambient temperature.

LAMP OPERATING CHARACTERISTICS

Watts	15
Volts	53
Amperes	0.325

The preceding lamp operating characteristics are based on base up operation in a preheat-start-type circuit in an ambient temperature of 25°C (77°F) with a 60 Hz sinusoidal power supply and a reference ballast having the characteristics shown in the following section:

REFERENCE BALLAST CHARACTERISTICS

Rated Input Voltage	118
Reference Current	0.325A
Impedance	290 ohms

The general requirements for reference ballasts are stated in American National Standard Specifications for Fluorescent Lamp Reference Ballast, ANSI C82.3-1983 (R1995).

Copyright © 1998 by Secretariat, ASC C78
1300 North 17th Street, Suite 1847, Rosslyn, VA 22209
First Edition
March 1998

Copyright National Electrical Manufacturers Association
Provided by IHS under license with NEMA
No reproduction or networking permitted without license from IHS
Not for Resale

CATHODE CHARACTERISTICS

Type: Low resistance

Note: Objective resistance of both cathodes in series - 25 ohms max.

LAMP STARTING REQUIREMENTS

The following values are intended to provide reliable starting at the ambient temperatures indicated and at higher temperatures up to a maximum of 110°F (43°C). At temperatures near the top of that range, however, initial starting will be secured but not necessarily immediate restarting.

VOLTAGE BETWEEN LAMP TERMINALS

At 32°F (0°C) and above, Min. RMS		108V
	Max. PK	400V

The voltage limits shall be met at any primary voltage between 90% and 100% of rated voltage.

PREHEAT CURRENT

Min. at 90% of rated voltage	0.280A
Max. at 106% of rated voltage	0.650A

RADIO INTERFERENCE SUPPRESSION

In order to assist in suppressing radio interference, starters shall contain a capacitor within the limits of .0008 to .010 microfarad connected internally in such a manner as to be effectively in parallel with the lamp.

Copyright © 1998 by Secretariat, ASC C78
1300 North 17th Street, Suite 1847, Rosslyn, VA 22209

Copyright National Electrical Manufacturers Association
Provided by IHS under license with NEMA
No reproduction or networking permitted without license from IHS
Not for Resale

BALLAST DESIGN NOTE

The values in this standard are based on 60 Hz operating characteristics. The RFI suppression capacitor may affect starting or operating parameters in high frequency ballasts.

APPLICATION DESIGN NOTE

The temperature of the lamp base measured at the bottom of the guide post (Point X in FIG. 1) shall not exceed 85°C (higher temperature under consideration).

Note 1: This temperature shall be measured:
a. With a lamp that is within 2.5% of the lamp operating characteristics.
b. With a ballast operating at 106% of rated voltage.
c. In the intended luminaire at the maximum operating temperature.

Note 2: A higher guide post temperature may be acceptable. Consult lamp manufacturer.

Note 3: This temperature limit is necessitated by the internal radio interference suppression capacitor incorporated into the base.

Copyright © 1998 by Secretariat, ASC C78
1300 North 17th Street, Suite 1847, Rosslyn, VA 22209
First Edition
March 1998

Copyright National Electrical Manufacturers Association
Provided by IHS under license with NEMA
No reproduction or networking permitted without license from IHS
Not for Resale

ANSI C78.4d-1998
Supplement to ANSI C78.4-1995

20 Watt, Single-ended, Quad Tube Preheat-Start Fluorescent Lamp with Internal Means of Starting

LAMP ABBREVIATION: 20W/6T5/Q/GX32/PH

Nominal Wattage: 20

Nominal Dimensions:	OAL	WIDTH	DEPTH
	155 mm	40 mm	40 mm

Bulb: See Figure 1

Base Type: GX32d-2

Base Dimensions: Base dimensions may be found in American National Standards for electric lamp bases and holders, ANSI C81.61-1990 (R1996).

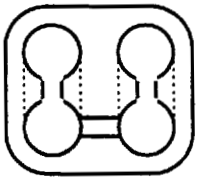

Top View

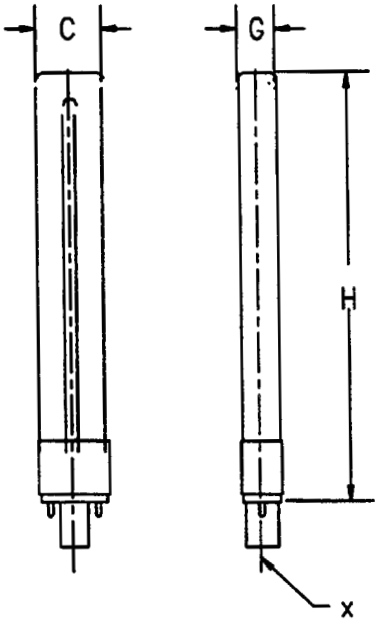

Figure 1

Copyright © 1998 by Secretariat, ASC C78
1300 North 17th Street, Suite 1847, Rosslyn, VA 22209

First Edition
March 1998

Copyright National Electrical Manufacturers Association
Provided by IHS under license with NEMA
No reproduction or networking permitted without license from IHS
Not for Resale

ANSI C78.4d-1998
Supplement to ANSI C78.4-1995

DIMENSIONAL CHARACTERISTICS

		Maximum Lamp Dim. (mm)	Maximum Lamp Outline Dim. (mm)
H	Base face to top of lamp	130	130
C	Width of lamp	41 (NOTE 1)	45 (NOTE 2)
G	Depth of lamp	41 (NOTE 1)	45 (NOTE 2)

Note 1: Applies to glass length only.
Note 2: Max. lamp outline dimensions, take into consideration bulb/base misalignment.

ELECTRICAL CHARACTERISTICS

Electrical characteristics and light output vary with ambient temperature.

LAMP OPERATING CHARACTERISTICS

Watts	20
Volts	53
Amperes	0.450

The preceding lamp operating characteristics are based on base up operation in a preheat-start-type circuit at an ambient temperature of 25°C (77°F) with a 60 Hz sinusoidal power supply and a reference ballast having the characteristics shown in the following section:

REFERENCE BALLAST CHARACTERISTICS

Rated input voltage	118V
Reference current	0.450A
Impedance	209 ohms

The general requirements for reference ballasts are stated in American National Standard Specifications for Fluorescent Lamp Reference Ballast, ANSI C82.3-1983 (R1995).

Copyright © 1998 by Secretariat, ASC C78
1300 North 17th Street, Suite 1847, Rosslyn, VA 22209
First Edition
March 1998

Copyright National Electrical Manufacturers Association
Provided by IHS under license with NEMA
No reproduction or networking permitted without license from IHS
Not for Resale

CATHODE CHARACTERISTICS

Type: Low resistance

Note: Objective resistance of both cathodes in series - 25 ohms max.

LAMP STARTING REQUIREMENTS

The following values are intended to provide reliable starting at the ambient temperatures indicated and at higher temperatures up to a maximum of 110°F (50°C). At temperatures near the top of that range, however, initial starting will be secured but not necessarily immediate restarting.

VOLTAGE BETWEEN LAMP TERMINALS

At 32°F (0°C) and above,	Min. RMS	108V
	Max. PK	400V

The voltage limits shall be met at any primary voltage between 90% and 110% of rated voltage.

PREHEAT CURRENT

Min. at 90% of rated voltage	0.405A
Max. at 106% of rated voltage	0.850A

RADIO INTERFERENCE SUPPRESSION

In order to assist in suppressing radio interference, starters shall contain a capacitor within the limits of .0008 to .010 microfarad connected internally in such a manner as to be effectively in parallel with the lamp.

Copyright © 1998 by Secretariat, ASC C78
1300 North 17th Street, Suite 1847, Rosslyn, VA 22209

Copyright National Electrical Manufacturers Association
Provided by IHS under license with NEMA
No reproduction or networking permitted without license from IHS
Not for Resale

BALLAST DESIGN NOTE

The values in this standard are based on 60 Hz operating characteristics. The RFI suppression capacitor may affect starting or operating parameters in high frequency ballasts.

APPLICATION DESIGN NOTE

The temperature of the lamp base measured at the bottom of the guide post (Point X in FIG. 1) shall not exceed 85°C (higher temperature under consideration).

Note 1: This temperature shall be measured:

a. With a lamp that is within 2.5% of the lamp operating characteristics.
b. With a ballast operating at 106% of rated voltage.
c. In the intended luminaire at the maximum operating temperature.

Note 2: A higher guide post temperature may be acceptable. Consult lamp manufacturer.

Note 3: This temperature limit is necessitated by the internal radio interference suppression capacitor incorporated into the base.

Copyright © 1998 by Secretariat, ASC C78
1300 North 17th Street, Suite 1847, Rosslyn, VA 22209
First Edition
March 1998

Copyright National Electrical Manufacturers Association
Provided by IHS under license with NEMA
No reproduction or networking permitted without license from IHS
Not for Resale

ANSI C78.4d-1998
Supplement to ANSI C78.4-1995

27 Watt, Single-ended, Quad Tube Preheat-Start Fluorescent Lamp with Internal Means of Starting

LAMP ABBREVIATION: **27W/7T5/Q/GX32/PH**

Nominal wattage: 27

Nominal dimensions:	OAL	WIDTH	DEPTH
	171 mm	40 mm	40 mm

Bulb: See Figure 1

Base Type: GX32d-3

Base Dimensions: Base dimensions may be found in American National Standards for electric lamp bases and holders, ANSI C81.61-1990 (R1996).

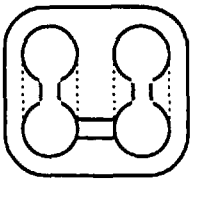

Top View

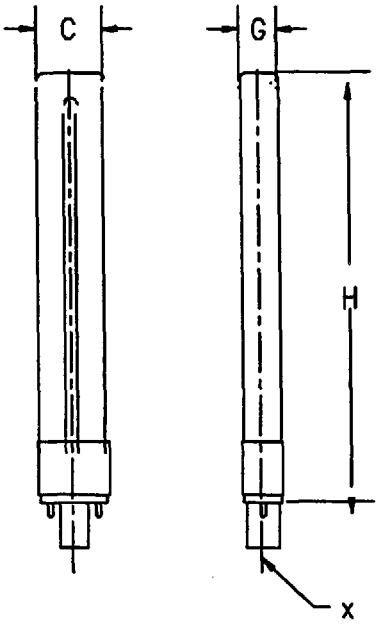

Figure 1

Copyright © 1998 by Secretariat, ASC C78
1300 North 17th Street, Suite 1847, Rosslyn, VA 22209

First Edition
March 1998

Copyright National Electrical Manufacturers Association
Provided by IHS under license with NEMA
No reproduction or networking permitted without license from IHS
Not for Resale

DIMENSIONAL CHARACTERISTICS

		Maximum Lamp Dim. (mm)	Maximum Lamp Outline Dim. (mm)
H	Base face to top of lamp	146	146
C	Width of lamp	41 (NOTE 1)	45 (NOTE 2)
G	Depth of lamp	41 (NOTE 1)	45 (NOTE 2)

Note 1: Applies to glass length only.
Note 2: Max. lamp outline dimensions, take into consideration bulb/base misalignment.

ELECTRICAL CHARACTERISTICS

Electrical characteristics and light output vary with ambient temperature.

LAMP OPERATING CHARACTERISTICS

Watts	27
Volts	54
Amperes	0.625

The preceding lamp operating characteristics are based on base up operation in a preheat-start-type circuit in an ambient temperature of 25°C (77°F) with a 60 Hz sinusoidal power supply and a reference ballast having the characteristics shown in the following section:

REFERENCE BALLAST CHARACTERISTICS

Rated input voltage	118
Reference current	0.625A
Impedance	154 ohms

The general requirements for reference ballasts are stated in American National Standard Specifications for Fluorescent Lamp Ballast, ANSI C82.3-1983(R1995).

Copyright © 1998 by Secretariat, ASC C78
1300 North 17th Street, Suite 1847, Rosslyn, VA 22209
First Edition
March 1998

Copyright National Electrical Manufacturers Association
Provided by IHS under license with NEMA
No reproduction or networking permitted without license from IHS
Not for Resale

CATHODE CHARACTERISTICS

Type: Low resistance

Note: Objective resistance of both cathodes in series - 25 ohms max.

LAMP STARTING REQUIREMENTS

The following values are intended to provide reliable starting at the ambient temperatures indicated and at higher temperatures up to a maximum of 110°F (43°C). At temperatures near the top of that range, however, initial starting will be secured but not necessarily immediate restarting.

VOLTAGE BETWEEN LAMP TERMINALS

At 32°F (0°C) and above,	Min. RMS	108V
	Max. PK	400V

The voltage limits shall be met at any primary voltage between 90% and 110% of rated voltage.

PREHEAT CURRENT

Min. at 90% of rated voltage	0.540A
Max. at 106% of rated voltage	1.080A

RADIO INTERFERENCE SUPPRESSION

In order to assist in suppressing radio interference, starters shall contain a capacitor within the limits of .0008 to .010 microfarad connected internally in such a manner as to be effectively in parallel with the lamp.

Copyright © 1998 by Secretariat, ASC C78
1300 North 17th Street, Suite 1847, Rosslyn, VA 22209

First Edition
March 1998

Copyright National Electrical Manufacturers Association
Provided by IHS under license with NEMA
No reproduction or networking permitted without license from IHS
Not for Resale

BALLAST DESIGN NOTE

The values in this standard are based on 60 Hz operating characteristics. The RFI suppression capacitor may affect starting or operating parameters in high frequency ballasts.

APPLICATION DESIGN NOTE

The temperature of the lamp base measured at the bottom of the guide post (Point X in FIG.1) shall not exceed 85°C (higher temperature under consideration).

Note 1: This temperature shall be measured:
a. With a lamp that is within 2.5% of the lamp operating characteristics.
b. With a ballast operating at 106% of rated voltage.
c. In the intended luminaire at the maximum operating temperature.

Note 2: A higher guide post temperature may be acceptable. Consult lamp manufacturer.

Note 3: This temperature limit is necessitated by the internal radio interference suppression capacitor incorporated into the base.

Copyright © 1998 by Secretariat, ASC C78
1300 North 17th Street, Suite 1847, Rosslyn, VA 22209
First Edition
March 1998

Copyright National Electrical Manufacturers Association
Provided by IHS under license with NEMA
No reproduction or networking permitted without license from IHS
Not for Resale

STD·NEMA C78·4-ENGL 1995 ■ 6470247 0521200 486 ■

ANSI C78.4c-1998
Supplement to ANSI C78.4-1995

American National Standard

Approved April 1, 1998 | Secretariat: National Electrical Manufacturers Association

Dimensional and Electrical Characteristics of Fluorescent Lamps— Self-Supporting Single-Based Compact Types— Requirements for Ballast Design— Paragraph 13.7

INSTRUCTIONS:

Place the attached pages into ANSI C78.4-1995 to replace pages 7/8 in the existing standard.

Discard this instruction sheet when finished.

NOTE: It was our practice in 1997 to format supplements in such a way as to publish only the affected pages, for ease of updating the original standard by merely replacing the necessary pages. As of 1998, this feature will be enhanced by the *shading* of the relevant text, of which this paragraph is an example.

Copyright © 1998 by National Electrical Manufacturers Association
1300 North 17th Street, Suite 1847, Rosslyn, VA 22209

First Edition
May 1998

Copyright National Electrical Manufacturers Association
Provided by IHS under license with NEMA
No reproduction or networking permitted without license from IHS
Not for Resale

ANSI C78.4c-1998
Supplement to ANSI C78.4-1995

American National Standard

Approved April 1, 1998 Secretariat: National Electrical Manufacturers Association

for electric lamps:

Dimensional and Electrical Characteristics of Fluorescent Lamps— Self-Supporting Single-Based Compact Types— Requirements for Ballast Design: Paragraph 13.7

An American National Standard implies a consensus of those substantially concerned with its scope and provisions. It is intended as a guide to aid the manufacturer, the consumer, and the general public. The existence of an American National Standard does not in any respect preclude anyone, whether he has approved the standard or not, from manufacturing, marketing, purchasing, or using products, processes, or procedures not conforming to the standards. Users are cautioned to obtain the latest editions.
The American National Standards Institute does not develop standards and will in no circumstances give an interpretation of any American National Standard. Moreover, no person shall have the right or authority to issue an interpretation of an American National Standard in the name of the American National Standards Institute.
CAUTION NOTICE: This American National Standard may be revised or withdrawn at any time. The procedures of the American National Standards Institute require that action be taken periodically to reaffirm, revise, or withdraw this standard. Purchasers of American National Standards may receive current information on all standards by calling or writing the American National Standards Institute.

Copyright © 1998 by National Electrical Manufacturers Association
1300 North 17th Street, Suite 1847, Rosslyn, VA 22209

First Edition
May 1998

Copyright National Electrical Manufacturers Association
Provided by IHS under license with NEMA
No reproduction or networking permitted without license from IHS
Not for Resale

ANSI C78.4a-1997
Supplement to ANSI C78.4a-1995

American National Standard

Approved September 25, 1997 Secretariat: National Electrical Manufacturers Association

Annex C (Informative): Generic Designation System for Compact Fluorescent Lamps

INSTRUCTIONS:

Place the attached pages into ANSI C78.4-1995 at the end of Part III, after Annex B.

Discard this instruction sheet when finished.

Copyright © 1997 by National Electrical Manufacturers Association
1300 North 17th Street, Suite 1847, Rosslyn, VA 22209

First Edition
December 1997

Copyright National Electrical Manufacturers Association
Provided by IHS under license with NEMA
No reproduction or networking permitted without license from IHS
Not for Resale

STD.NEMA C78.4-ENGL 1995 ■ 6470247 0521202 259 ■

American National Standard

ANSI C78.4-1995

American National Standard for Fluorescent Lamps — Self-Supporting, Single-Based Compact Types — Dimensional and Electrical Characteristics

National Electrical Manufacturers Association
1300 North 17th Street
Suite 1847
Rosslyn, VA 22209
(703) 841-3200

American National Standard

Copyright National Electrical Manufacturers Association
Provided by IHS under license with NEMA
No reproduction or networking permitted without license from IHS

Not for Resale

STD.NEMA C78.4-ENGL 1995 ■ 6470247 0521203 195 ■

ANSI® C78.4-1995

American National Standard for Fluorescent Lamps

Self-Supporting, Single-Based Compact Types— Dimensional and Electrical Characteristics

Secretariat

National Electrical Manufacturers Association

Approved April 18, 1995

Copyright National Electrical Manufacturers Association
Provided by IHS under license with NEMA
No reproduction or networking permitted without license from IHS

Not for Resale

American National Standard

Approval of an American National Standard requires verification by ANSI that the requirements for due process, consensus, and other criteria for approval have been met by the standards developer.

Consensus is established when, in the judgment of the ANSI Board of Standards Review, substantial agreement has been reached by directly and materially affected interests. Substantial agreement means much more than a simple majority, but not necessarily unanimity. Consensus requires that all views and objections be considered, and that a concerted effort be made toward their resolution.

The use of American National Standards is completely voluntary; their existence does not in any respect preclude anyone, whether he has approved the standards or not, from manufacturing, marketing, purchasing, or using products, processes, or procedures not conforming to the standards.

The American National Standards Institute does not develop standards and will in no circumstances give an interpretation of any American National Standard. Moreover, no person shall have the right or authority to issue an interpretation of an American National Standard in the name of the American National Standards Institute. Requests for interpretations shall be addressed to the secretariat or sponsor whose name appears on the title page of this standard.

CAUTION NOTICE: This American National Standard may be revised or withdrawn at any time. The procedures of the American National Standards Institute require that action be taken to reaffirm, revise, or withdraw this standard no later than five years from the date of approval. Purchasers of American National Standards may receive current information on all standards by calling or writing the American National Standards Institute.

Published by

National Electrical Manufacturers Association
1300 N. 17th Street, Suite 1847, Rosslyn, Virginia 22209

Copyright © 1996 National Electrical Manufacturers Association
All rights reserved

No part of this publication may be reproduced in any form, in an electronic retrieval system or otherwise, without prior written permission of the publisher.

Printed in the United States of America

Copyright National Electrical Manufacturers Association
Provided by IHS under license with NEMA
No reproduction or networking permitted without license from IHS

Not for Resale

CONTENTS

Page

Foreword ii

Part I General Information and Requirements 1
1 Scope 1
2 General 1
3 Normative references 1
4 Definitions 2
5 Lamp abbreviations 4
6 Methods of measurement 4
7 Reference ballasts 4
8 Drawings 4
9 Applications of lamps on more than one type of circuit 4
10 Lamp physical and dimensional requirements 4
11 Lamp electrical characteristics 5
12 Thermal conditions 6
13 Information for ballast design 7
14 Information for luminaire design 8
15 Lamp drawings and dimensioning principles 10

Part II Lamp Data Sheets

5 Watt, T4 Twin, internal starting device, G23 base 5W/5T4-1
7 Watt, T4 Twin, internal starting device, G23 base 7W/5T4-1
9 Watt, T4 Twin, internal starting device, G23 base 9W/6T4-1
9 Watt, T4 Quad, internal starting device, G23-2 base 9W/4T4-1
10 Watt, T4 Quad, internal starting device, G24 base 10W/5T4-1
13 Watt, T4 Twin, internal starting device, GX23 base 13W/7T4-1
13 Watt, T4 Quad, internal starting device, GX23-2 base 13W/5T4-1
13 Watt, T4 Quad, internal starting device, G24 base 13W/6T4-1
18 Watt, T4 Quad, internal starting device, G24 base 18W/7T4-1
26 Watt, T4 Quad, internal starting device, G24 base 26W/8T4-1

Part III Annexes

Annex A Bibliography A-1

Annex B Guidelines for Establishing Fluorescent Lamp Abbreviations B-1

Copyright National Electrical Manufacturers Association
Provided by IHS under license with NEMA
No reproduction or networking permitted without license from IHS
Not for Resale

Foreword (This Foreword is not part of American National Standard C78.4-1995)

Prior to the issuance of the first edition of C78.4 in 1995, single-based fluorescent lamps were specified in a series of supplements to the preheat lamp standard. This new standard presents data for a larger array of lamps, plus a general text, which includes more detailed lamp requirements, definitions, general information, and information for ballast and luminaire design. The general format of this standard is patterned after the 1991 version of C78.1 for rapid start lamps, which had been greatly expanded to provide more information and to improve clarity. There was additional emphasis on this standard due to the nature of the rapidly expanding market for self-supporting, single-based, compact lamps.

There are two annexes in this standard. Both are informative and not considered part of this standard.

Suggestions for improvement of this standard will be welcome. They should be sent to the Secretariat, C78, National Electrical Manufacturers Association, 1300 North 17th Street, Suite 1847, Rosslyn, VA, 22209.

This standard was processed and approved for submittal to ANSI by Accredited Standards Committee on Electric Lamps, C78, and its Subcommittee on Fluorescent Lamps, C78-2. Committee approval of this standard does not necessarily imply that all committee members voted for its approval. At the time it approved this standard, Committee C78 had the following members:

Alfred C. Rousseau, Chairman
Ralph Kaiser, Vice Chairman
Randolph N. Roy, Secretariat
Jeanne L. Spicer, Coordinating Editor

Organization Represented	*Name of Representative*
Advance Transformer Company	Norm Grimshaw
Duro-Test Corporation	Herbert Strauss
Edison Electric Institute	William Maguire
ETL Testing Laboratories	Craig Davenport
General Electric Lighting Company	Ralph Kaiser
Illuminating Engineering Society	Rita M. Harrold
National Electrical Manufacturers Association	Richard Snow
OSRAM SYLVANIA, INC.	Peter A. Bleasby
Philips Lighting Company	Alfred C. Rousseau
Underwriters Laboratories	David Belt

Copyright National Electrical Manufacturers Association
Provided by IHS under license with NEMA
No reproduction or networking permitted without license from IHS
Not for Resale

At the time it approved this standard, Subcommittee C78-2 had the following members:

David Mullen, Chairman
Tom Gavenonis, Vice Chairman
Randolph N. Roy, Secretariat

Organization Represented	*Name of Representative*
Advance Transformer Company	Norm Grimshaw
	Glenn Garbowicz (Alt.)
	Mark Fellows (Alt.)
AROMAT-Nais Division	Dail Swanson
Diablo Scientific Laboratories	W. R. Alling
Duro-Test Corporation	Don Northrop
Electronic Lighting, Inc.	Ronald A. Lesea
ETL Testing Services. Inc.	Mike Neary
General Electric Company	Edward E. Hammer
	John Krissinger (Alt.)
	Rex Groves (Alt.)
Kingtec, Inc.	Gil Forrler
MagneTek	George Mortimer
	William Dunham (Alt.)
	Kenneth J. Denton (Alt.)
	Bill Brosius (Alt.)
Motorola Lighting, Inc.	Howard Wolfman
OSRAM SYLVANIA, INC.	David T. Mullen
	Tom Gavenonis (Alt.)
	Warren Anderson (Alt.)
Philips Lighting Company	Frank M. Latassa
Thomas & Betts	Rick Kauffman
Underwriters Laboratories	David Belt
Valmont Electric	Gregory S. Bennorth

Copyright National Electrical Manufacturers Association
Provided by IHS under license with NEMA
No reproduction or networking permitted without license from IHS
Not for Resale

AMERICAN NATIONAL STANDARD FOR FLUORESCENT LAMPS— SELF-SUPPORTING, SINGLE-BASED COMPACT TYPES— DIMENSIONAL AND ELECTRICAL CHARACTERISTICS

1 Scope

This standard sets forth the physical and electrical characteristics required to assure the interchangeability and to assist in the proper application of self-supporting, single-based compact fluorescent lamps. The self-supporting aspect of these lamps is a distinctive identification since other single-based lamps are specified in other standards. Specifications for both the lamp itself and the interactive features of the lamp with the ballast and luminaire are given.

The lamps covered in this standard are intended for use with external ballasts as described. Primarily, these lamps are designed for 60Hz operation. Nevertheless, some lamps may be also suitable for high frequency operation.

Lamps specified in this standard are intended for general lighting applications on circuits employing either internal means of preheat (switch) starting, external means of preheat (switch) starting, or rapid start operation.

Many of the lamp types covered in this standard are closely comparable to those specified in publication IEC 901.

2 General

There are three parts to this standard.

Part I contains requirements and general information. Detailed descriptions, references, and explanations of the terms used in the lamp data sheets are given in this part. It also defines the principles of dimensioning lamps, both as finished lamps and for maximum outline purposes.

Part II contains all of the lamp data sheets for the lamp classes covered in this standard.

Part III contains the annexes.

3 Normative references

The following standards contain provisions which, through reference in this text, constitute provisions of this American National Standard. At the time of publication, the editions indicated were valid. All standards are subject to revision, and parties to agreements based on this American National Standard are encouraged to investigate the possibility of applying the most recent editions of the standards indicated below.

ANSI C78.375-1991	*American National Standard for Fluorescent Lamps - Guide for Electrical Measurements*
ANSI C79.1-1994	*American National Standard Nomenclature for Glass Bulbs Intended for Use With Electric Lamps*

Copyright National Electrical Manufacturers Association
Provided by IHS under license with NEMA
No reproduction or networking permitted without license from IHS
Not for Resale

ANSI C81.61-1990 *American National Standard for Electric Lamp Bases*

ANSI C81.63-1991 *American National Standard for Gauges for Electric Bases and Lampholders*

ANSI C82.1-1990 *American National Standard for Ballasts for Fluorescent Lamps - Specifications*

4 Definitions

4.1 Lamps

4.1.1 fluorescent lamp: A low-pressure mercury electric-discharge lamp in which a fluorescing coating (phosphor) transforms some of the ultraviolet energy, generated by the discharge, into light.

4.1.2 self-supporting, single-based compact fluorescent lamp: A fluorescent lamp of a small, compact shape with a single base which performs the entire mechanical support function.

4.1.3 preheat start fluorescent lamp: A fluorescent lamp intended for operation on a preheat (switch) start circuit. Some preheat lamps may contain an internal starting device.

4.1.4 rapid start fluorescent lamp: A fluorescent lamp designed to operate in a rapid start circuit.

4.1.5 deactivated lamp: A lamp which lacks sufficient emissive material on one or both its cathodes or lacks circuitry to properly heat the cathode in order to obtain normal operation.

4.1.6 lamp class: A grouping of lamps with common physical, dimensional, and electrical characteristics.

4.1.7 lamp type: A grouping of lamps within a lamp class having common photometric characteristics.

4.1.8 twin shape: The shape of a single-based lamp in which the bulb of the finished lamp is formed essentially into two parallel legs.

4.1.9 quad shape: The shape of a single-based lamp in which the bulb of the finished lamp is formed essentially into four parallel legs, two each in planes parallel to each other.

4.1.10 square shape: The shape of a single-based lamp in which the tube is formed into a nominally square shaped lamp.

4.1.11 multiple shape: The shape designation for a single-based lamp using a combination of tubes (multiple) which is not covered by any other shape designation.

4.1.12 rated wattage: The wattage marked on the lamp, expressed in watts.

4.2 Lamp components

4.2.1 low resistance cathode: A lamp cathode which exhibits a resistance in the range 2 to 15 ohms, when heated to nominal emission temperature by applying 3.6 volts/cathode.

4.2.2 high resistance cathode: A lamp cathode which exhibits a resistance in the range above 15 ohms, when heated to nominal emission temperature by applying 8.0 volts/cathode.

Copyright National Electrical Manufacturers Association
Provided by IHS under license with NEMA
No reproduction or networking permitted without license from IHS
Not for Resale

4.2.3 radio frequency interference suppression capacitor: A capacitor, usually located in the base of certain lamps or in an external starter, which is connected in parallel to the lamp in order to suppress radio frequency interference. Such a capacitor will be specified on a lamp data sheet.

4.3 Lamp operation

4.3.1 lamp starting time: The time between application of circuit power and the time of establishment of full, or nearly full, operational current in the lamp.

4.3.2 crest factor: The ratio of the peak value of lamp current (or voltage) to the root-mean square (rms) value of lamp current (or voltage).

4.4 Ballasts and auxiliaries

4.4.1 fluorescent lamp ballast: A device that, by means of resistance, inductance, capacitance or electronic elements, singly or in combination, controls the current, voltage, and waveform to the proper values for starting and operation of fluorescent lamps.

4.4.2 rapid start circuit: That circuit in which hot-cathode electric discharge lamps are operated under the following conditions: (1) the lamps are started with the cathodes heated to a temperature sufficient for adequate electron emission and without establishing local ionization across the cathodes; (2) such heating is accomplished either by means of low-voltage heater windings in the ballast itself or by separate low-voltage transformers; (3) sufficient voltage is applied across the lamp and between the lamp and the starting aid (usually the luminaire itself) to initiate the discharge when the cathodes reach a temperature high enough for adequate emission; and (4) cathode heating voltage is maintained even after the lamp is in full operation. Two types of rapid start circuits have evolved: (1) those for lamps with nominal 3.6-volt cathodes (low resistance) and (2) those for lamps with nominal 8.0-volt cathodes (high resistance). In some cases the same lamp can be suitable for operation in either rapid-start or preheat (switch) start circuits.

A modified rapid start circuit may be used in some application wherein, after lamp starting; (a) the cathode heating voltage is reduced or (b) the heating voltage is turned off.

4.4.3 preheat (switch) start circuit: A circuit in which hot-cathode electric discharge lamps are started with the cathodes preheated through the use of a starting switch, either manual or automatic in its operation. The starting switch, when closed, connect the two cathodes, in series, in the ballast circuit so that current flows to heat the cathodes to emission temperature. When the switch is opened, a voltage surge is produced in conjunction with an inductive ballast which initiates the discharge. Only the arc current flows through the cathodes after the lamp is in operation.

4.4.4 external electronic preheat start circuit: A circuit in which the cathode preheating function is provided as part of an external electronic ballast.

Note—Requires the use of lamps with 4-pin base.

4.4.5 instant start circuit: A circuit in which an electric discharge lamp is started by application of a voltage sufficiently high to eject electrons from the electrodes by field emission, initiate electron flow through the lamp, ionize the gases, and start a discharge through the lamp without previous heating of the electrodes.

5 Lamp abbreviations

Lamp abbreviations for fluorescent lamps are not officially assigned through any administered designation system. Those used on the data sheets in Part II are assigned in accordance with the guideline of Annex B. There is no requirement for the use of these abbreviations for lamp marking.

Copyright National Electrical Manufacturers Association
Provided by IHS under license with NEMA
No reproduction or networking permitted without license from IHS
Not for Resale

6 Methods of measurement

Electrical measurements necessary to determine the performance of lamps defined in this standard shall be made in accordance with the lamp measurements standard, [ANSI C78.375].

7 Reference Ballasts

Reference ballasts used for measurements of fluorescent lamps shall meet the general requirements set forth in the reference ballast standard, [ANSI C82.3]. It should be noted that the reference ballast standard requires a power factor of 0.075 +/- 0.005 for all fluorescent reference ballasts, unless otherwise specified on a lamp data sheet. A rapid start reference ballast when called for in this standard includes 3.6 volts cathode heating, unless otherwise specified on the relevant lamp data sheets.

8 Drawings

Drawings, in conjunction with the "finished lamp" dimensional values on a particular lamp data sheet, specify the size of a finished lamp. Only those dimensions to be controlled are shown. Details or construction differences among lamp manufacturers are not covered.

Also, the general shape and size of a lamp's maximum outline is specified in relation to the same drawings and the "Max. Lamp Outline" dimensions on a lamp data sheet. For the types of lamps covered in this standard, it has been industry practice to overlook minor bulb shape and construction differences in a maximum outline and to merely apply expanded values to the finished lamp dimension to specify the outline.

9 Applications of lamps on more than one type of circuit

Lamp data sheets in Part II specify the intended circuit application. In some cases, a lamp may be used on either a preheat (switch) start or a rapid start circuit. In such cases, the lamp data sheet will show the information for both of the appropriate circuits. If a particular lamp class has been authorized by the lamp manufacturers for operation at high frequency conditions, the appropriate information will be supplied on the relevant lamp data sheet.

10 Lamp physical and dimensional requirements

10.1 Bulbs

10.1.1 Bulb specifications

Each lamp data sheet in Part II specifies the necessary bulb shape, tube diameter, and final lamp shape. Bulb shapes are defined in the bulb nomenclature standard, ANSI C79.1-1980 (R1984). Due to the long established practice of referring to the diameter of fluorescent lamp bulbs in eight-of-an-inch units, this standard maintains that practice. For example, a 1/2" diameter bulb is called a T4 bulb. Metric diameters, in millimeters, are shown in parentheses immediately following the customary designation.

The basic bulb shape of some self-supporting, single-based fluorescent lamps may be additionally formed in the lamp assembly process to acquire a final "lamp shape". For example, some final shapes of lamps in this standard are referred to as twin or quad designs. There are not any requirements on finished lamp shape other than the specified lamp dimensions.

Copyright National Electrical Manufacturers Association
Provided by IHS under license with NEMA
No reproduction or networking permitted without license from IHS
Not for Resale

10.2 Base specifications

The required standardized base type is specified on each lamp data sheet. Bases on finished lamps shall comply with the base standard, ANSI C81.61. Gauges for checking bases are included in ANSI C81.63.

10.3 Marking

The following information shall be distinctly and durably marked on a lamp:

- Mark of origin. This may take the form of a trademark, the manufacturer's mark, or the name of the responsible vendor.

- Rated wattage, identified by a suffix "W."

10.4 Lamp Dimensions

Finished lamps shall comply with the "Finished Lamp" dimensions specified on the relevant data sheet in Part IV. Graphical definitions of the dimensional letter codes used on the data sheets are given in Part II.

Maximum lamp outline dimensions are also specified. Such outlines are the maximum limits of the space that may be occupied by any part of the bulb of a lamp. They are referenced to the base in a fixed position. Base-to-bulb misalignment is taken into consideration.

10.5 Bulb-Base Strength

10.5.1 For new lamps, the lamp bulb shall not be loosened from the lamp base by an axial pull of 9 lbf (40 N), or a bending moment of 26.5 in-lbf (3Nm). The pivot point for the bending test lies in the reference plane of the base.

10.5.2 At the end of life, the base of a lamp shall show no damage impairing safety or ease of lamp removal from a lampholder.

10.6 Color

Lamp colors are not specified in this standard. Lamp chromaticity is considered to be a variable within each particular lamp class.

11 Lamp Electrical Characteristics

11.1 Lamp Starting Requirements

Lamps shall start at the minimum starting voltages, within the waveshape limitation, as specified on each lamp data sheet under Information for Ballast Design. Separate characteristics apply for preheat (switch) start operation or rapid start operation and are so identified on the lamp data sheets. Starting under high frequency conditions ..... (to be determined).

The starting voltage values provided on a lamp data sheet are intended to provide reliable starting of lamps at the ambient temperatures indicated and at higher temperatures up to a maximum of 110°F (43°C). At temperatures near the top of that range, however, initial starting will be secured but not necessarily immediate restarting.

11.1.2 Lamp Starting Time

Lamps operated on preheat (switch) start circuits shall start fully within the time specified on the relevant lamp data sheet and remain alight. (Time values and a test procedure are under consideration.)

Copyright © 1998 by National Electrical Manufacturers Association
1300 North 17th Street, Suite 1847, Rosslyn, VA 22209

Copyright National Electrical Manufacturers Association
Provided by IHS under license with NEMA
No reproduction or networking permitted without license from IHS
Not for Resale

11.1.3 Radio Interference Suppression Capacitors

In order to assist in the suppression of radio interference, lamps with internal starter systems shall employ a capacitor of the size specified on the relevant lamp data sheet. This capacitor shall be connected internally in such a manner as to be effectively in parallel with the lamp.

11.2 Lamp Operating Characteristics

11.2.1 The operating values of lamp voltage, current, and wattage shown on the individual lamp data sheets in Part II are those objective (nominal) values that apply after the lamps have been aged for 100 hours. Fluorescent lamp operating characteristics are based on operation with a 60Hz sinusoidal power supply and a reference ballast (with cathode heating for rapid start characteristics) having the characteristics shown on the appropriate lamp data sheet and at an ambient temperature of 25°C. Electrical characteristics and light output vary with ambient temperature.

Lamps shall be tested in the vertical base-up position unless otherwise specified on the lamp data sheet.

Electrical measurements shall be made in accordance with the measurement standard ANSI C78.375. Test circuits are given therein.

11.2.2 Lamp Wattage

The initial readings for the power dissipated by any individual lamp shall not differ from the operating wattage indicated on the relevant lamp data sheet by more than a tolerance of plus 5% + 0.5 watts.

12 Thermal Conditions

12.1 Maximum Temperature Rise Test

The temperature rise shall not exceed the value on the relevant data sheet under the following test conditions:

A. A test lamp specially prepared with the starter short-circuited

B. Suspended by low mass nylon slings in a draft-free atmosphere at 25 ± 1°C ambient test temperature.

C. In the vertical base-up position unless otherwise specified on the relevant lamp data sheet.

D. On a reference ballast at 110% of its rated supply voltage.

12.2 Temperature Measurement Location:

12.2.1 2G7, 2GX7, GX10q, GY10q, G23, G24, GX24, GX24q, GX32 bases
The temperature rise shall be measured at the hottest point on the base surface at a distance *x* from the reference plane of the base, as indicated in the table, in the direction of the glass bulb.

Copyright © 1998 by National Electrical Manufacturers Association
1300 North 17th Street, Suite 1847, Rosslyn, VA 22209

First Edition
April 1999

Copyright National Electrical Manufacturers Association
Provided by IHS under license with NEMA
No reproduction or networking permitted without license from IHS
Not for Resale

Base Designation	Distance "X" (mm)
2G7, 2GX7	8*
GX10q, GY10q	8
G23, GX23	8
G24	12 *
GX24q	*
GX32	16 *

* Under Consideration

12.2.2 GR8, GR10q bases (all wattages excluding 10W)
The temperature rise shall be measured at a point on the base surface which is equidistant between the two glass bulbs which emerge from the base, and which lies on the straight line which joins the axes on the glass bulbs.

12.2.3 GR10q (10W)
The temperature rise shall be measured at the center of the base face which is opposite to that containing the base pins.

12.2.4 G10q base
Under consideration.

13 Information for Ballast Design

13.1 General

13.1.1 Ballasts for use with the lamps in this standard shall meet the general requirements for fluorescent lamp ballasts as stated in the ballast standard, ANSI C82.1.

Note: The values in this standard are based on 60Hz operating characteristics. A radio interference suppression capacitor, if present in a lamp, may affect starting or operating parameters in a high frequency mode of operation.

13.1.2 A ballast intended for use with a particular lamp class shall provide the lamp starting, cathode heating if appropriate, and operating values as specified on the relevant lamp data sheet in Part II as defined in sections 13.2, 13.3, and 13.4. Other special requirements may be specified on the lamp data sheet.

13.2 Lamp Starting

A commercial ballast intended to be used on a particular lamp class shall provide, (a) the voltage between lamp terminals, (b) voltage from lamp terminal to a starting aid where necessary, within (c) the specified waveshape limitations, and (d) cathode heating requirements where applicable. The specified voltage limits shall be provided at any supply voltage between 90% and 110% of the ballast's rated input voltage unless otherwise specified on the lamp data sheet.

Note: The maximum preheat current is specified at 106% of the ballast's rated input voltage.

13.2.1 Voltage Between Lamp Terminals

The limits shown on the appropriate lamp data sheets apply to the voltage across the lamp to be supplied between those two ballast terminals that deliver the highest voltage.

Copyright © 1998 by National Electrical Manufacturers Association
1300 North 17th Street, Suite 1847, Rosslyn, VA 22209

Copyright National Electrical Manufacturers Association
Provided by IHS under license with NEMA
No reproduction or networking permitted without license from IHS
Not for Resale

13.2.2 Voltage From Lamp Terminal to Starting Aid

The limits, when provided on a lamp data sheet, apply to the voltage to be supplied between a terminal (the one delivering the highest voltage) of a lamp and that part of the ballast which will be at ground potential.

13.2.3 Waveshapes of Starting Voltage

The maximum starting voltage crest factor value for all lamps in this standard is 2.0, unless otherwise specified on the lamp data sheet. This applies both to the voltage across the lamp and to the starting aid voltage if specified, at 90-110% of the rated ballast input voltage.

13.3 Cathode Heating

13.3.1 For preheat (switch) start circuits, requirements for cathode heating during the preheating phase and for the preheat time are given on the relevant lamp data sheet.

In addition, an appropriate value of a dummy resistor is specified as an aid to ballast design. When the lamp has an internal means of starting, the dummy load should be used to assure that the cathode preheating current falls within the range specified on the lamp data sheet over the full range of supply voltage specified.

13.3.2 For rapid start circuits, the required cathode heating voltage is specified on each lamp data sheet. Both starting (dummy load) and during operation limits are given. The specified voltage limits shall be provided at the ballast's rated input voltage, unless otherwise specified on the lamp data sheet.

In addition, the appropriate value of the dummy load resistor is specified as an aid to ballast design. Where one ballast winding operates two cathodes in parallel, the dummy load value shall be half the given value.

13.4 Operating Current Waveshape

The waveshape of the lamp operating current supplied to a single-based fluorescent lamp in a preheat (switch) start or rapid start circuit shall have a crest factor that does not exceed 1.70, unless otherwise specified on a lamp data sheet.

13.5 Lamp Operating Current Ratio

The lamp current in a reference lamp, delivered by a ballast at its rated supply voltage, shall not exceed 107.5% of the current delivered to the same lamp by a reference ballast at its rated input voltage, unless otherwise specified on the relevant lamp data sheet. For preheat operation, this ratio will also not be less than 92.5%.

13.6 Application Information

The lamps covered in this standard may rectify at end of life when operated with a series reactor ballast on a 277 volt line. This must be taken into account in the ballast design and means to prevent ballast damage from overheating shall be incorporated. Reactor ballasts for electrical systems which provide greater than 440 volt peak at the lamp shall not be allowed, e.g., 347 volt system.

13.7 Cathode Resistance

For lamps having preheated cathodes and designed for operation on high frequency or additionally operating on high frequency, the initial reading of the resistance of each cathode, when heated with the specified test current, shall comply with the values specified on the relevant lamp data sheet.

Copyright © 1998 by National Electrical Manufacturers Association
1300 North 17th Street, Suite 1847, Rosslyn, VA 22209

First Edition
April 1999

Copyright National Electrical Manufacturers Association
Provided by IHS under license with NEMA
No reproduction or networking permitted without license from IHS
Not for Resale

In addition, the average value of the resistance ratio R_h/R_c of the coils of 10 cathodes shall be in the range 4.75 ± 0.5. R_h is the resistance of the cathode when heated with the test current specified on the relevant lamp data sheet and R_c is the resistance of the cathode when cold, both excluding possible lead wire resistance.

14 Information for Luminaire Design

14.1 General

A luminaire intended for use with a particular lamp class shall provide the appropriate starting aid per 14.2 if necessary, and any specialized requirement, such as lamp operating position limitations, that may appear on the relevant lamp data sheet in Part II. In addition, provisions shall be made to comply with the mechanical strength requirements and maximum base temperature requirements of 14.3, 14.4, and 14.5.

14.2 Starting Aid

Operation of fluorescent lamps on a rapid start circuit requires the presence of a grounded, conductive starting aid. See Note. This can be a conventional part of the luminaire. The starting aid shall be connected to electrical ground.

Note: Size and spacing distance requirements for starting aids for use with self-supporting, single-based compact fluorescent lamps are under consideration.

14.3 Mechanical Strength

14.3.1 Auxiliary Supports

The lamp classes specified in this standard are not intended to be used with auxiliary supports. In these classes of lamps the lampholder is intended to provide the entire holding function.

14.3.2 Attachments to Lamps

The lamp manufacturer may impose limitations in regards to attachment of any devices to its lamp. Contact the lamp manufacturer.

14.4 Maximum Base Temperature, Normal Operation

Under normal operating conditions, with the lamp installed in a luminaire, the temperature of the lamp base measured at the bottom of the guidepost shall not exceed the value specified in the relevant lamp data sheet.

Notes:

(1) The temperature limitation under normal test conditions is necessary due to the presence of a radio interference suppression capacitor built into the bases of some classes of lamps, for example G23, GX23, G24d, or GX32d based lamps.

(2) Following are the test conditions (for eventual transfer to the measurements standard C78.375):

- test lamps are production lamps with their lamp power within 2.5% of the standardized objective values.
- the ambient temperature of the test room shall be 25±1°C.
- with the lamp operating within its operating position limitation in a luminaire.
- the test voltage of the luminaire shall be 106% of rated voltage.

Copyright © 1998 by National Electrical Manufacturers Association
1300 North 17th Street, Suite 1847, Rosslyn, VA 22209

First Edition
April 1999

Copyright National Electrical Manufacturers Association
Provided by IHS under license with NEMA
No reproduction or networking permitted without license from IHS
Not for Resale

14.5 Maximum Base Temperature, Abnormal Operation

Under abnormal test conditions specified below, with the lamp installed in a luminaire, the temperature of the lamp base measured at the point shown in 12.2 shall not exceed the value specified in the relevant lamp data sheet.

Following are the test conditions (for eventual transfer to the measurements standard C78.375:

- a test lamp specially prepared with the starter short-circuited.
- the ambient temperature of the test room shall be 25±1°C.
- with the lamp operating within its operating position limitation in a luminaire.
- the test voltage of the luminaire shall be 110% of rated voltage.

15 Lamp Drawings and Dimensioning Principles

15.1 Theoretically, two sets of drawings are needed to describe the dimensions of concern for a single-based lamp. These are (a) a finished product drawing and (b) a maximum outline drawing. The main contrast being that the maximum outline drawing includes certain allowances beyond the finished product dimensions and to acknowledge bulb-to-base misalignment.

Basically, the same dimensional codes are used for the drawings of finished lamps and for maximum outline drawings of those lamps. In particular, the codes "C", "G", and "H" have essentially the same meanings in both cases. Only the values are different. The values are given on the lamp data sheets under the appropriate subtitles "Finished Lamp" and "Maximum Outline".

In addition, a wider allowance is given in the upper-base, lower-bulb area to accommodate the use of materials other than metal base shells. That area is defined by the 34.0mm width, 19.5mm depth and 30mm height above the reference plane dimensions for G23 and GX23 based lamps.

15.2 For self-supporting, compact, single-based fluorescent lamps, maximum outline drawings are based on certain principles and simplified assumptions. These are:

- Straight lines are used as much as possible to simplify the outline. All compromises with the actual space are in excess of the actual space.
- All excursions of a lamp bulb are considered relative to a fixed-position base.
- The base shown is merely a typical form. Essential base dimensions are controlled by the relevant base contact-making gauge.
- All dimensions are in millimeters unless otherwise specified.

Note: As a further simplification, there has been no attempt to strictly follow the procedures of SR30, procedures for the use in preparation of incandescent lamp space drawings.

Figure 1 on the next page depicts these principles.

Copyright © 1998 by National Electrical Manufacturers Association
1300 North 17th Street, Suite 1847, Rosslyn, VA 22209

First Edition
April 1999

Copyright National Electrical Manufacturers Association
Provided by IHS under license with NEMA
No reproduction or networking permitted without license from IHS
Not for Resale

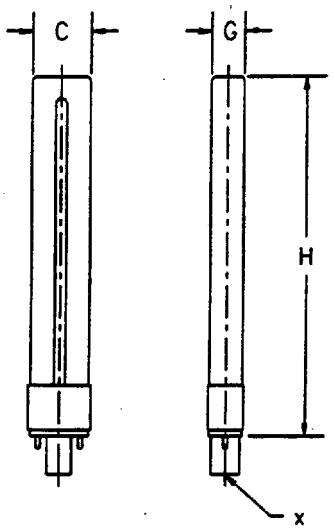

Twin
(a) Finished Product Drawing

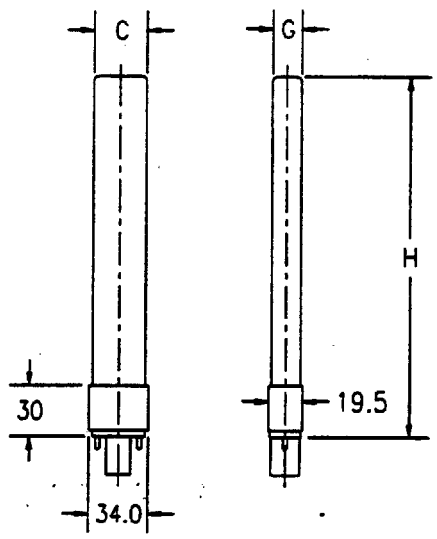

Twin
(b) Maximum Outline Drawing

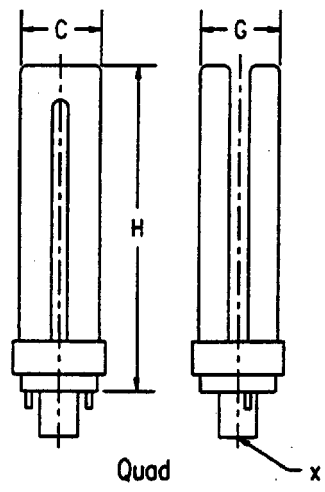

Quad
(a) Finished Product Drawing

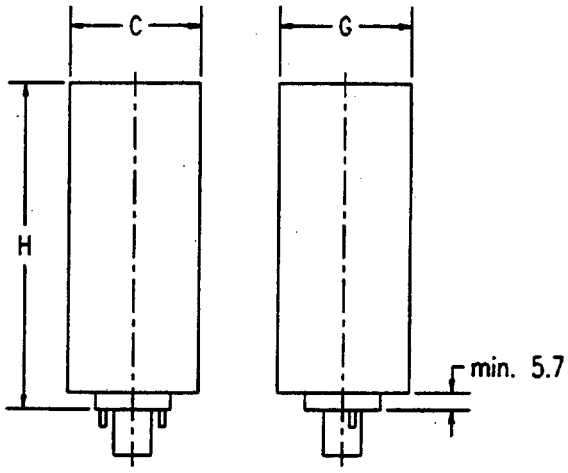

Quad
(b) Maximum Outline Drawing

Figure 1

Copyright National Electrical Manufacturers Association
Provided by IHS under license with NEMA
No reproduction or networking permitted without license from IHS
Not for Resale

Part II

LAMP DATA SHEETS

The lamp data sheets in this Part are filed in a sequence of increasing wattage.

Lamp Type:	Page:
5 Watt, T4 Twin, internal starting device, G23 base	5W/5T4-1
7 Watt, T4 Twin, internal starting device, G23 base	7W/5T4-1
9 Watt, T4 Twin, internal starting device, G23 base	9W/6T4-1
9 Watt, T4 Quad, internal starting device, G23-2 base	9W/4T4-1
10 Watt, T4 Quad, internal starting device, G24 base	10W/5T4-1
13 Watt, T4 Twin, internal starting device, GX23 base	13W/7T4-1
13 Watt, T4 Quad, internal starting device, GX23-2 base	13W/5T4-1
13 Watt, T4 Quad, internal starting device, G24 base	13W/6T4-1
18 Watt, T4 Quad, internal starting device, G24 base	18W/7T4-1
26 Watt, T4 Quad, internal starting device, G24 base	26W/87T4-1

Previous page is blank

Copyright National Electrical Manufacturers Association
Provided by IHS under license with NEMA
No reproduction or networking permitted without license from IHS

Not for Resale

5-Watt, T4 Twin Single-Based Preheat Fluorescent Lamp With Internal Means of Starting

The data on this standard sheet are fully compatible with publication IEC 901.

Lamp Description:

Lamp Abbreviation	5W/5T4/T/G23/PH		
Nominal Wattage	5 Watts		
Nominal Dimension	**OAL**	**Width**	**Depth**
	105 mm	30 mm	15 mm
Bulb Designation	T4		
Circuit Application	Preheat (switch) start, internal starter		

Physical Characteristics:

Dimensional Characteristics (Definitions of Part II apply)

	Finished Lamp Dimensions (mm)	**Max. Lamp Outline (mm) (Note 2)**
H (Base face to top of lamp) max.	85	85
C (Width of lamp) max	28 (Note 1)	32.5
G (Depth of lamp) max	13 (Note 1)	18.1

Notes

1 Applies along the length of the glass only.
2 Conditions of clause 10.4 apply.

Base Specifications: G23
Operating Position: Any

Electrical Characteristics: (Conditions of Section 11 apply)

Lamp Operating Characteristics:

Wattage (W)	5.5
Voltage (V)	35
Current (A)	0.180

Cathode Characteristics

Type High resistance

Radio Interference Suppression Capacitor (Note 3)

Minimum (uF) (at 60Hz)	0.0008
Maximum (uF) (at 60Hz)	0.010 (Note 4)

Notes

3 The suppression capacitor may affect starting and operating performance of lamps used with high frequency ballasts.
4 A lower maximum value of capacitance is under consideration.

Lamp Starting Time (seconds (u.c.)

Reference Ballast Characteristics

Rated input voltage (V)	118
Reference current (A)	0.180
Impedance (ohms)	605

Copyright National Electrical Manufacturers Association
Provided by IHS under license with NEMA
No reproduction or networking permitted without license from IHS
Not for Resale

Thermal Conditions:
The conditions of Section 12 apply to a special test lamp.
Base temperature rise (K max.) 75 (u.c.)

Information for Ballast Design: (Conditions of Section 13 apply)
Starting Voltage
Voltage between lamp terminals:
at 0°F(-18°C) and above, (Vrms) min. 108
at 0°F(-18°C) and above, (Vpeak) max. 440

Maximum Lamp Operating Current Ratio (%) 107.5

Preheat Current
Minimum at 90% of rated line voltage (A) 0.153
Maximum at 106% of rated line voltage (A) 0.240

Cathode Heat Requirements
Dummy load resistor, for both cathodes in series: 160 ohms

Note—A radio interference suppression capacitor is located internal to the lamp base. See Sections 11.1.3 and 13.1.1 for further details.

Information for Luminaire Design: (Conditions of Section 14 apply)

Normal Lamp Operation (Clause 14.4 applies)
Maximum temperature at point X on lamp base (°C): 85 (u.c.)

Notes
1 Point X is identified in Figure 1.
2 A higher guide-post temperature may be acceptable. Consult the lamp manufacturer.

Abnormal Lamp Operation (Clause 14.5 applies)

Maximum base temperature (°C):140 (u.c.)

Copyright National Electrical Manufacturers Association
Provided by IHS under license with NEMA
No reproduction or networking permitted without license from IHS
Not for Resale

7-Watt, T4 Twin Single-Based Preheat Fluorescent Lamp With Internal Means of Starting

The data on this standard sheet are fully compatible with publication IEC 901.

Lamp Description:

Lamp Abbreviation	7W/5T4/T/G23/PH		
Nominal Wattage	7 Watts		
Nominal Dimension	**OAL**	**Width**	**Depth**
	135 mm	0 mm	15 mm
Bulb Designation	T4		
Circuit Application	Preheat (switch) start, internal starter		

Physical Characteristics:

Dimensional Characteristics (Definitions of Part II apply)

	Finished Lamp Dimensions (mm)	Max Lamp Outline (mm) (Note 2)
H (Base face to top of lamp) max.	115	115
C (Width of lamp) max.	28 (Note 1)	32.5
G (Depth of lamp) max.	13 (Note 1)	18.1

Notes
1 Applies along the length of the glass only.
2 Conditions of clause 10.4 apply.

Base Specifications: G23
Operating Position: Any

Electrical Characteristics: (Conditions of Section 11 apply)

Lamp Operating Characteristics:

Wattage (W)	7
Voltage (V)	47
Current (A)	0.180

Cathode Characteristics

Type High resistance

Radio Interference Suppression Capacitor (Note 3)

Minimum (uF) (at 60Hz) 0.0008
Maximum (uF) (at 60Hz) 0.010 (Note 4)

Notes
3 The suppression capacitor may affect starting and operating performance of lamps used with high frequency ballasts.
4 A lower maximum value of capacitance is under consideration.

Lamp Starting Time (seconds) (u.c.)

Reference Ballast Characteristics

Rated input voltage (V)	118
Reference current (A)	0.180
Impedance (ohms)	570

Copyright National Electrical Manufacturers Association
Provided by IHS under license with NEMA
No reproduction or networking permitted without license from IHS
Not for Resale

Thermal Conditions:
The conditions of Section 12 apply to a special test lamp.
Base temperature rise (K max.) 75 (u.c.)

Information for Ballast Design: (Conditions of Section 13 apply)
Starting Voltage
Voltage between lamp terminals:

at 0°F(-18°C) and above, (Vrms) min.	108
at 0°F(-18°C) and above, (Vpeak) max.	440

Maximum Lamp Operating Current Ratio (%) 107.5

Preheat Current

Minimum at 90% of rated line voltage (A)	0.153
Maximum at 106% of rated line voltage (A)	0.240

Cathode Heat Requirements
Dummy load resistor, for both cathodes in series 160 ohms

Note— A radio interference suppression capacitor is located internal to the lamp base. See Sections 11.1.3 and 13.1.1 for further details.

Information for Luminaire Design: (Conditions of Section 14 apply)

Normal Lamp Operation (Clause 14.4 applies)
Maximum temperature at point X on lamp base (°C) 85 (u.c.)

Notes
1 Point X is identified in Figure 1.
2 A higher guide-post temperature may be acceptable. Consult the lamp manufacturer.

Abnormal Lamp Operation (Clause 14.5 applies)

Maximum base temperature (°C) 140 (u.c.)

Copyright National Electrical Manufacturers Association
Provided by IHS under license with NEMA
No reproduction or networking permitted without license from IHS
Not for Resale

9-Watt, T4 Twin Single-Based Preheat Fluorescent Lamp With Internal Means of Starting

The data on this standard sheet are fully compatible with publication IEC 901.

Lamp Description:

Lamp Abbreviation	9W/6T4/T/G23/PH		
Nominal Wattage	9 Watts		
Nominal Dimension	**OAL**	**Width**	**Depth**
	165 mm	30 mm	15 mm
Bulb Designation	T4		
Circuit Application	Preheat (switch) start, internal starter		

Physical Characteristics:

Dimensional Characteristics (Definitions of Part II apply)

	Finished Lamp Dimensions (mm)	Max. Lamp Outline (mm) (Note 2)
H (Base face to top of lamp) max.	145	145
C (Width of lamp) max.	28 (Note 1)	32.5
G (Depth of lamp) max	13 (Note 1)	18.1

Notes

1 Applies along the length of the glass only.
2 Conditions of clause 10.4 apply.

Base Specifications	G23
Operating Position	Any

Electrical Characteristics: (Conditions of Section 11 apply)

Lamp Operating Characteristics

Wattage (W)	9
Voltage (V)	59
Current (A)	0.180

Cathode Characteristics

Type	High resistance

Radio Interference Suppression Capacitor (Note 3)

Minimum (uF) (at 60Hz)	0.0008
Maximum (uF) (at 60Hz)	0.010 (Note 4)

Notes

3 The suppression capacitor may affect starting and operating performance of lamps used with high frequency ballasts.
4 A lower maximum value of capacitance is under consideration.

Lamp Starting Time (seconds) (u.c.)

Reference Ballast Characteristics

Rated input voltage (V)	118
Reference current (A)	0.180
Impedance (ohms)	515

Copyright National Electrical Manufacturers Association
Provided by IHS under license with NEMA
No reproduction or networking permitted without license from IHS
Not for Resale

Thermal Conditions:
The conditions of Section 12 apply to a special test lamp.
Base temperature rise (K max.) 75 (u.c.)

Information for Ballast Design: (Conditions of Section 13 apply)
Starting Voltage
Voltage between lamp terminals:
at 25°F(-4°C) and above, (Vrms) min. 108
at 25°F(-4°C) and above, (Vpeak) max. 440

Maximum Lamp Operating Current Ratio (%) 107.5

Preheat Current
Minimum at 90% of rated line voltage (A) 0.153
Maximum at 106% of rated line voltage (A) 0.240

Cathode Heat Requirements
Dummy load resistor, for both cathodes in series 160 ohms

Note— A radio interference suppression capacitor is located internal to the lamp base. See Sections 11.1.3 and 13.1.1 for further details.

Information for Luminaire Design: (Conditions of Section 14 apply)

Normal Lamp Operation (Clause 14.4 applies)
Maximum temperature at point X on lamp base (°C) 85 (u.c.)

Notes
1 Point X is identified in Figure 1.
2 A higher guide-post temperature may be acceptable. Consult the lamp manufacturer.

Abnormal Lamp Operation (Clause 14.5 applies)

Maximum base temperature (°C) 140 (u.c.)

Copyright National Electrical Manufacturers Association
Provided by IHS under license with NEMA
No reproduction or networking permitted without license from IHS
Not for Resale

9-Watt, T4 Quad Single-Based Preheat Fluorescent Lamp With Internal Means of Starting

The data on this standard sheet are fully compatible with publication IEC 901.

Lamp Description:

Lamp Abbreviation	9W/4T4/Q/G23-2/PH			
Nominal Wattage	9 Watts			
Nominal Dimension	**OAL**	**Width**	**Depth**	
	112 mm	30 mm	30 mm	
Bulb Designation	T4			
Circuit Application	Preheat (switch) start, internal starter			

Physical Characteristics:

Dimensional Characteristics (Definitions of Part II apply)

	Finished Lamp Dimensions (mm)	**Max. Lamp Outline (mm) (Note 2)**
H (Base face to top of lamp) max.	88	88
C (Width of lamp) max	28 (Note 1)	35
G (Depth of lamp) max	28 (Note 1)	35

Notes

1 Applies along the length of the glass only.
2 Conditions of clause 10.4 apply.

Base Specifications	G23-2
Operating Position	Any

Electrical Characteristics: (Conditions of Section 11 apply)

Lamp Operating Characteristics

Wattage (W)	9
Voltage (V)	59
Current (A)	0.180

Cathode Characteristics

Type	High resistance

Radio Interference Suppression Capacitor (Note 3)

Minimum (uF) (at 60Hz)	0.0008
Maximum (uF) (at 60Hz)	0.010 (Note 4)

Notes

3 The suppression capacitor may affect starting and operating performance of lamps used with high frequency ballasts.
4 A lower maximum value of capacitance is under consideration.

Lamp Starting Time (seconds) (u.c.)

Reference Ballast Characteristics

Rated input voltage (V	118
Reference current (A)	0.180
Impedance (ohms)	515

Copyright National Electrical Manufacturers Association
Provided by IHS under license with NEMA
No reproduction or networking permitted without license from IHS
Not for Resale

Thermal Conditions:
The conditions of Section 12 apply to a special test lamp.

Base temperature rise (K max.)	(u.c.)

Information for Ballast Design: (Conditions of Section 13 apply)
Starting Voltage

Voltage between lamp terminals;	
at 25°F(-4°C) and above, (Vrms) min.	108
at 25°F(-4°C) and above, (Vpeak) max.	440

Maximum Lamp Operating Current Ratio (%) 107.5

Preheat Current

Minimum at 90% of rated line voltage (A)	0.153
Maximum at 106% of rated line voltage (A)	0.240

Cathode Heat Requirements

Dummy load resistor, for both cathodes in series	160 ohms

Note—A radio interference suppression capacitor is located internal to the lamp base. See Sections 11.1.3 and 13.1.1 for further details.

Information for Luminaire Design: (Conditions of Section 14 apply)

Normal Lamp Operation (Clause 14.4 applies)

Maximum temperature at point X on lamp base (°C)	85 (u.c.)

Notes
1 Point X is identified in Figure 1.
2 A higher guide-post temperature may be acceptable. Consult the lamp manufacturer.

Abnormal Lamp Operation (Clause 14.5 applies)

Maximum base temperature (°C)	140 (u.c.)

Copyright National Electrical Manufacturers Association
Provided by IHS under license with NEMA
No reproduction or networking permitted without license from IHS
Not for Resale

10-Watt, T4 Quad Single-Based Preheat Fluorescent Lamp With Internal Means of Starting

The data on this standard sheet are fully compatible with publication IEC 901.

Lamp Description:

Lamp Abbreviation	10W/5T4/Q/G24/PH			
Nominal Wattage	10 Watts			
Nominal Dimension		**OAL**	**Width**	**Depth**
		120 mm	30 mm	30 mm
Bulb Designation	T4			
Circuit Application	Preheat (switch) start, internal starter			

Physical Characteristics:

Dimensional Characteristics (Definitions of Part II apply)

	Finished Lamp Dimensions (mm)	**Max. Lamp Outline (mm) (Note 2)**
H (Base face to top of lamp) max	95	95
C (Width of lamp) max.	28 (Note 1)	35
G (Depth of lamp) max.	28 (Note 1)	35

Notes

1 Applies along the length of the glass only.
2 Conditions of clause 10.4 apply.

Base Specifications	G24d-1
Operating Position	Any

Electrical Characteristics: (Conditions of Section 11 apply)

Lamp Operating Characteristics:

Wattage (W)	10
Voltage (V)	64
Current (A)	0.190

Cathode Characteristics

Type	High resistance

Radio Interference Suppression Capacitor (Note 3)

Minimum (uF) (at 60Hz)	0.0008
Maximum (uF) (at 60Hz)	0.010 (Note 4)

Notes

3 The suppression capacitor may affect starting and operating performance of lamps used with high frequency ballasts.
4 A lower maximum value of capacitance is under consideration.

Lamp Starting Time (seconds) (u.c.)

Reference Ballast Characteristics

Rated input voltage (V)	220
Reference current (A)	0.190
Impedance (ohms)	1080

Copyright National Electrical Manufacturers Association
Provided by IHS under license with NEMA
No reproduction or networking permitted without license from IHS
Not for Resale

Thermal Conditions:
The conditions of Section 12 apply to a special test lamp.
Base temperature rise (K max.) (u.c.)

Information for Ballast Design: (Conditions of Section 13 apply)
Starting Voltage
Voltage between lamp terminals:
at 0°F(-18°C) and above, (Vrms) min. 198
at 0°F(-18°C) and above, (Vpeak) max. 440

Maximum Lamp Operating Current Ratio (%) 107.5

Preheat Current
Minimum at 90% of rated line voltage (A) 0.153
Maximum at 106% of rated line voltage (A) 0.275

Cathode Heat Requirements
Dummy load resistor, for both cathodes in series 100 ohms

Note—A radio interference suppression capacitor is located internal to the lamp base. See Sections 11.1.3 and 13.1.1 for further details.

Information for Luminaire Design: (Conditions of Section 14 apply)

Normal Lamp Operation (Clause 14.4 applies)
Maximum temperature at point X on lamp base (°C) 85 (u.c.)

Notes
1 Point X is identified in Figure 1.
2 A higher guide-post temperature may be acceptable. Consult the lamp manufacturer.

Abnormal Lamp Operation (Clause 14.5 applies)

Maximum base temperature (°C) 140 (u.c.)

Copyright National Electrical Manufacturers Association
Provided by IHS under license with NEMA
No reproduction or networking permitted without license from IHS
Not for Resale

13-Watt, T4 Twin Single-Based Preheat Fluorescent Lamp With Internal Means of Starting

The data on this standard sheet are fully compatible with publication IEC 901.

Lamp Description:

Lamp Abbreviation	13W/7T4/T/GX23/PH			
Nominal Wattage	13 Watts			
Nominal Dimension		**OAL**	**Width**	**Depth**
		190 mm	30 mm	15 mm
Bulb Designation	T4			
Circuit Application	Preheat (switch) start, internal starter			

Physical Characteristics:

Dimensional Characteristics (Definitions of Part II apply)

	Finished Lamp Dimensions (mm)	**Max. Lamp Outline (mm) (Note 2)**
H (Base face to top of lamp) max.	170	170
C (Width of lamp) max.	28 (Note 1)	32.5
G (Depth of lamp) max.	13 (Note 1)	18.1

Notes
1 Applies along the length of the glass only.
2 Conditions of clause 10.4 apply.

Base Specifications	GX23d
Operating Position	Any

Electrical Characteristics: (Conditions of Section 11 apply)

Lamp Operating Characteristics

Wattage (W)	13.4
Voltage (V)	59
Current (A)	0.285

Cathode Characteristics

Type	Low resistance

Radio Interference Suppression Capacitor

Minimum (uF) (at 60Hz)	0.0008
Maximum (uF) (at 60Hz)	0.010 (Note 3)

Notes
3 The suppression capacitor may affect starting and operating performance of lamps used with high frequency ballasts.
4 A lower maximum value of capacitance is under consideration.

Lamp Starting Time (seconds) (u.c.)

Reference Ballast Characteristics

Rated input voltage (V)	118
Reference current (A)	0.285
Impedance (ohms)	325

Copyright National Electrical Manufacturers Association
Provided by IHS under license with NEMA
No reproduction or networking permitted without license from IHS
Not for Resale

Thermal Conditions:
The conditions of Section 12 apply to a special test lamp.
Base temperature rise (K max.) 75 (u.c.)

Information for Ballast Design: (Conditions of Section 13 apply)
Starting Voltage
Voltage between lamp terminals:
at 32°F(0°C) and above, (Vrms) min. 108
at 32°F(0°C) and above, (Vpeak) max. 440

Maximum Lamp Operating Current Ratio (%) 107.5

Preheat Current
Minimum at 90% of rated line voltage (A) 0.270
Maximum at 106% of rated line voltage (A) 0.525

Cathode Heat Requirements
Dummy load resistor, for both cathodes in series 25 ohms

Note—A radio interference suppression capacitor is located internal to the lamp base. See Sections 11.1.3 and 13.1.1 for further details.

Information for Luminaire Design: (Conditions of Section 14 apply)

Normal Lamp Operation (Clause 14.4 applies)
Maximum temperature at point X on lamp base (°C) 85 (u.c.)

Notes
1 Point X is identified in Figure 1.
2 A higher guide-post temperature may be acceptable. Consult the lamp manufacturer.

Abnormal Lamp Operation (Clause 14.5 applies)

Maximum base temperature (°C) 140 (u.c.)

Copyright National Electrical Manufacturers Association
Provided by IHS under license with NEMA
No reproduction or networking permitted without license from IHS
Not for Resale

13-Watt, T4 Quad Single-Based Preheat Fluorescent Lamp With Internal Means of Starting

The data on this standard sheet are fully compatible with publication IEC 901.

Lamp Description:

Lamp Abbreviation	13W/5T4/Q/GX23-2/PH			
Nominal Wattage	13 Watts			
Nominal Dimension		**OAL**	**Width**	**Depth**
		123 mm	30 mm	30 mm
Bulb Designation	T4			
Circuit Application	Preheat (switch) start, internal starter			

Physical Characteristics:

Dimensional Characteristics (Definitions of Part II apply)

	Finished Lamp Dimensions (mm)	**Max. Lamp Outline (mm) (Note 2)**
H (Base face to top of lamp) max.	99 (Note 3)	99 (Note 3)
C (Width of lamp) max	28 (Note 1)	35
G (Depth of lamp) max.	28 (Note 1)	35

Notes

1 Applies along the length of the glass only.
2 Conditions of clause 10.4 apply.
3 Future objective is 105 mm.

Base Specifications	GX23-2
Operating Position	Any

Electrical Characteristics: (Conditions of Section 11 apply)

Lamp Operating Characteristics:

Wattage (W)	13
Voltage (V)	59
Current (A)	0.285

Cathode Characteristics

Type Low resistance

Radio Interference Suppression Capacitor (Note 4)

Minimum (uF) (at 60Hz)	0.0008
Maximum (uF) (at 60Hz)	0.010 (Note 5)

Notes

4 The suppression capacitor may affect starting and operating performance of lamps used with high frequency ballast.
5 A lower maximum value of capacitance is under consideration.

Lamp Starting Time (seconds) (u.c.)

Reference Ballast Characteristics

Rated input voltage (V)	118
Reference current (A)	0.285
Impedance (ohms)	325

Copyright National Electrical Manufacturers Association
Provided by IHS under license with NEMA
No reproduction or networking permitted without license from IHS
Not for Resale

Thermal Conditions:
The conditions of Section 12 apply to a special test lamp.

Base temperature rise (K max.)	75 (u.c.)
Power dissipation (W max.)	(u.c.)

Information for Ballast Design: (Conditions of Section 13 apply)
Starting Voltage

Voltage between lamp terminals:	
at 32°F(0°C) and above, (Vrms) min.	108
at 32°F(0°C) and above, (Vpeak) max.	440

Maximum Lamp Operating Current Ratio (%) 107.5

Preheat Current

Minimum at 90% of rated line voltage (A)	0.270
Maximum at 106% of rated line voltage (A)	0.525

Cathode Heat Requirements

Dummy load resistor, for both cathodes in series	25 ohms

Note—A radio interference suppression capacitor is located internal to the lamp base. See Sections 11.1.3 and 13.1.1 for further details.

Information for Luminaire Design: (Conditions of Section 14 apply)

Normal Lamp Operation (Clause 14.4 applies)
Maximum temperature at point X on lamp base (°C) 85 (u.c.)

Notes
1 Point X is identified in Figure 1.
2 A higher guide-post temperature may be acceptable. Consult the lamp manufacturer.

Abnormal Lamp Operation (Clause 14.5 applies)

Maximum base temperature (°C) 140 (u.c.)

Copyright National Electrical Manufacturers Association
Provided by IHS under license with NEMA
No reproduction or networking permitted without license from IHS
Not for Resale

13-Watt, T4 Quad Single-Based Preheat Fluorescent Lamp With Internal Means of Starting

The data on this standard sheet are fully compatible with publication IEC 901.

Lamp Description:

Lamp Abbreviation	13W/6T4/Q/G24/PH			
Nominal Wattage	13 Watts			
Nominal Dimension		**OAL**	**Width**	**Depth**
		155 mm	30 mm	30 mm
Bulb Designation	T4			
Circuit Application	Preheat (switch) start, internal starter			

Physical Characteristics:

Dimensional Characteristics (Definitions of Part II apply)

	Finished Lamp Dimensions (mm)	**Max. Lamp Outline (mm) (Note 2)**
H (Base face to top of lamp) max.	130	130
C (Width of lamp) max.	28 (Note 1)	35
G (Depth of lamp) max.	28 (Note 1)	35

Notes

1 Applies along the length of the glass only.
2 Conditions of clause 10.4 apply.

Base Specifications	G24d-1
Operating Position	Any

Electrical Characteristics: (Conditions of Section 11 apply)

Lamp Operating Characteristics:

Wattage (W)	13
Voltage (V)	91
Current (A)	0.175

Cathode Characteristics

Type	High resistance

Radio Interference Suppression Capacitor (Note 3)

Minimum (uF) (at 60Hz)	0.0008
Maximum (uF) (at 60Hz)	0.010 (Note 4)

Notes

3 The suppression capacitor may affect starting and operating performance of lamps used with high frequency ballasts.
4 A lower maximum value of capacitance is under consideration.

Lamp Starting Time (seconds) (u.c.)

Reference Ballast Characteristics

Rated input voltage (V)	220
Reference current (A)	0.170
Impedance (ohms)	1080

Copyright National Electrical Manufacturers Association
Provided by IHS under license with NEMA
No reproduction or networking permitted without license from IHS
Not for Resale

Thermal Conditions:
The conditions of Section 12 apply to a special test lamp.

Base temperature rise (K max.)	(u.c.)

Information for Ballast Design: (Conditions of Section 13 apply)
Starting Voltage

Voltage between lamp terminals:	
at 0°F(-18°C) and above, (Vrms) min	198
at 0°F(-18°C) and above, (Vpeak) max.	440

Maximum Lamp Operating Current Ratio (%)	107.5

Preheat Current

Minimum at 90% of rated line voltage (A)	0.153
Maximum at 106% of rated line voltage (A)	0.275

Cathode Heat Requirements

Dummy load resistor, for both cathodes in series	100 ohms

Note—A radio interference suppression capacitor is located internal to the lamp base. See Sections 11.1.3 and 13.1.1 for further details.

Information for Luminaire Design: (Conditions of Section 14 apply)

Normal Lamp Operation (Clause 14.4 applies)

Maximum temperature at point X on lamp base (°C)	85 (u.c.)

Notes
1 Point X is identified in Figure 1.
2 A higher guide-post temperature may be acceptable. Consult the lamp manufacturer.

Abnormal Lamp Operation (Clause 14.5 applies)

Maximum base temperature (°C)	140 (u.c.)

Copyright National Electrical Manufacturers Association
Provided by IHS under license with NEMA
No reproduction or networking permitted without license from IHS
Not for Resale

18-Watt, T4 Quad Single-Based Preheat Fluorescent Lamp With Internal Means of Starting

The data on this standard sheet are fully compatible with publication IEC 901.

Lamp Description:

Lamp Abbreviation	18W/7T4/Q/G24/PH			
Nominal Wattage	18 Watts			
Nominal Dimension		**OAL**	**Width**	**Depth**
		175 mm	30 mm	30 mm
Bulb Designation	T4			
Circuit Application	P reheat (switch) start, internal starter			

Physical Characteristics:

Dimensional Characteristics (Definitions of Part II apply)

	Finished Lamp Dimensions (mm)	**Max. Lamp Outline (mm) (Note 2)**
H (Base face to top of lamp) max	150	150
C (Width of lamp) max.	28 (Note 1)	35
G (Depth of lamp) max.	28 (Note 1)	35

Notes

1 Applies along the length of the glass only.
2 Conditions of clause 10.4 apply.

Base Specifications	G24d-2
Operating Position	Any

Electrical Characteristics: (Conditions of Section 11 apply)

Lamp Operating Characteristics

Wattage (W)	18
Voltage (V)	100
Current (A)	0.220

Cathode Characteristics

Type	High resistance

Radio Interference Suppression Capacitor (Note 3)

Minimum (uF) (at 60Hz)	0.0008
Maximum (uF) (at 60Hz)	0.010 (Note 4)

Notes

3 The suppression capacitor may affect starting and operating performance of lamps used with high frequency ballasts.
4 A lower maximum value of capacitance is under consideration.

Lamp Starting Time (seconds) (u.c.)

Reference Ballast Characteristics

Rated input voltage (V)	220
Reference current (A)	0.220
Impedance (ohms)	815

Copyright National Electrical Manufacturers Association
Provided by IHS under license with NEMA
No reproduction or networking permitted without license from IHS
Not for Resale

Thermal Conditions:
The conditions of Section 12 apply to a special test lamp.

Base temperature rise (K max.)	(u.c.)

Information for Ballast Design: (Conditions of Section 13 apply)
Starting Voltage

Voltage between lamp terminals:	
at 0°F(-18°C) and above, (Vrms) min.	198
at 0°F(-18 ≥ C) and above, (Vpeak) max.	440

Maximum Lamp Operating Current Ratio (%)	107.5

Preheat Current

Minimum at 90% of rated line voltage (A)	0.190
Maximum at 106% of rated line voltage (A)	0.375

Cathode Heat Requirements

Dummy load resistor, for both cathodes in series	80 ohms

Note—A radio interference suppression capacitor is located internal to the lamp base. See Sections 11.1.3 and 13.1.1 for further details.

Information for Luminaire Design: (Conditions of Section 14 apply)

Normal Lamp Operation (Clause 14.4 applies)

Maximum temperature at point X on lamp base (°C)	85 (u.c.)

Notes
1 Point X is identified in Figure 1.
2 A higher guide-post temperature may be acceptable. Consult the lamp manufacturer.

Abnormal Lamp Operation (Clause 14.5 applies)

Maximum base temperature (°C)	140 (u.c.)

Copyright National Electrical Manufacturers Association
Provided by IHS under license with NEMA
No reproduction or networking permitted without license from IHS
Not for Resale

26-Watt, T4 Quad Single-Based Preheat Fluorescent Lamp With Internal Means of Starting

The data on this standard sheet are fully compatible with publication IEC 901.

Lamp Description:

Lamp Abbreviation	26W/8T4/Q/G24/PH			
Nominal Wattage	26 Watts			
Nominal Dimension		**OAL**	**Width**	**Depth**
		195 mm	30 mm	30 mm
Bulb Designation	T4			
Circuit Application	Preheat (switch) start, internal starter			

Physical Characteristics:

Dimensional Characteristics (Definitions of Part II apply)

	Finished Lamp Dimensions (mm)	Max. Lamp Outline (mm) (Note 2)
H (Base face to top of lamp) max.	170	170
C (Width of lamp) max.	28 (Note 1)	35
G (Depth of lamp) max.	28 (Note 1)	35

Notes

1 Applies along the length of the glass only.
2 Conditions of clause 10.4 apply.

Base Specifications	G24d-3
Operating Position	Any

Electrical Characteristics:

Lamp Operating Characteristics (Conditions of Section 11 apply)

Wattage (W)	26
Voltage (V)	105
Current (A)	0.325

Cathode Characteristics

Type	High resistance

Radio Interference Suppression Capacitor (Note 3)

Minimum (uF) (at 60Hz)	0.0008
Maximum (uF) (at 60Hz)	0.010 (Note 4)

Notes

3 The suppression capacitor may affect starting and operating performance of lamps used with high frequency ballasts.
4 A lower maximum value of capacitance is under consideration.

Lamp Starting Time (seconds)	(u.c.)

Reference Ballast Characteristics

Rated input voltage (V)	220
Reference current (A)	0.315
Impedance (ohms)	546

Copyright National Electrical Manufacturers Association
Provided by IHS under license with NEMA
No reproduction or networking permitted without license from IHS
Not for Resale

Thermal Conditions:
The conditions of Section 12 apply to a special test lamp.
Base temperature rise (K max.) (u.c.)

Information for Ballast Design: (Conditions of Section 13 apply)
Starting Voltage
Voltage between lamp terminals:
at 0°F(-18°C) and above, (Vrms) min. 198
at 0°F(-18°C) and above, (Vpeak) max. 440

Maximum Lamp Operating Current Ratio (%) 107.5

Preheat Current
Minimum at 90% of rated line voltage (A) 0.270
Maximum at 106% of rated line voltage (A) 0.550

Cathode Heat Requirements
Dummy load resistor, for both cathodes in series 25 ohms

Note—A radio interference suppression capacitor is located internal to the lamp base. See Sections 11.1.3 and 13.1.1 for further details.

Information for Luminaire Design: (Conditions of Section 14 apply)

Normal Lamp Operation (Clause 14.4 applies)

Maximum temperature at point X on lamp base (°C) 85 (u.c.)

Notes
1 Point X is identified in Figure 1.
2 A higher guide-post temperature may be acceptable. Consult the lamp manufacturer.

Abnormal Lamp Operation (Clause 14.5 applies)

Maximum base temperature (°C) 140 (u.c.)

Copyright National Electrical Manufacturers Association
Provided by IHS under license with NEMA
No reproduction or networking permitted without license from IHS
Not for Resale

PART III:

ANNEXES

Copyright National Electrical Manufacturers Association
Provided by IHS under license with NEMA
No reproduction or networking permitted without license from IHS

Not for Resale

Annex A
(Informative)

Bibliography

A.1 Associated standards

Other classes of fluorescent lamps intended for use on other kinds of circuits are described in the following standards:

ANSI C78.1-1991 *American National Standard for Dimensional and Electrical Characteristics of Fluorescent Lamps – Rapid Start Types.*

Note—Some other classes of single-based fluorescent lamps such as circular and 2G11-based lamps are covered in the above standard.

ANSI C78.2-1991 *American National Standard for Dimensional and Electrical Characteristics of Fluorescent Lamps – Preheat Start Types.*

ANSI C78.3-1991 *American National Standard for Dimensional and Electrical Characteristics of Fluorescent Lamps – Instant Start and Cold Cathode Types.*

ANSI C78.5-1991 *American National Standard Guide for the Performance of Self-Ballasted Lamps.*

A.2 Other related standards

ANSI C78.180-1989 *American National Standard Specifications for Fluorescent Lamp Starters*

ANSI C78.376-1991 *American National Standard Specifications for Chromaticity of Fluorescent Lamps*

ANSI C82.3-1989 *American National Standard for Reference Ballasts for Fluorescent Lamps*

ANSI/IEEE 100-1992 *American National Standard/IEEE Dictionary of Electrical and Electronic Terms*

ANSI/IES RP16-1986 *American National Standard/IES Recommended Practices for Illuminating Engineering, Nomenclature and Definitions*

Publication IEC 901 *Single-Capped Fluorescent Lamps – Safety and Performance Requirements.*

Copyright National Electrical Manufacturers Association
Provided by IHS under license with NEMA
No reproduction or networking permitted without license from IHS
Not for Resale

Annex B
(Informative)

Guidelines for establishing fluorescent lamp abbreviations

(This annex is not part of American National Standard C78.4, but is included for information only.)

B.1 General

There is a need to identify lamp abbreviations for the lamps in this standard. These abbreviations will benefit users of the fluorescent lamp data sheets. A lamp, in this designation system, is identified by wattage, length or shape, bulb size, base and circuit application.

This guide is intended to provide a set of rules for reference in deriving abbreviations for lamp data sheets, in a consistent manner. There is no implication that abbreviations derived from this system are to be used or required for commercial literature applications.

B.2 Designation system

Only one abbreviation, under this system, is to be applied to a lamp data sheet. No attempt is made to identify lamp colors.

An abbreviation is comprised of six parts:

1. Lamp rated or nominal wattage
2. Lamp nominal length
3. Bulb diameter
4. Lamp shape, as required
5. Lamp base, as required
6. Circuit and/or special description

The parts of the abbreviation are joined directly together in the above sequence and slashes are used as separators after wattage, bulb diameter, and the lamp shape or lamp base if used. A hyphen may be used if two properties are identified under item 6 above. Otherwise there are no spaces or other separator marks used.

B.2.1 Wattage

All lamps shall be identified by wattage, even though they may not be marketed by wattage. The wattage values shown shall be the rated or nominal wattage of the lamp. The numerical value of wattage in watts shall be followed directly by the letter "W".

B.2.2 Length

The length of a linear lamp shall be expressed in the designation by a number representing the nominal length of the lamp, in inches. Only the numerical value is entered. This length code is based upon a first order assumption that fluorescent lamps are linear lamps. For twin or quad shaped lamps the length (in inches) is part of the abbreviation.

For those special cases where it is necessary to identify lamp length in metric units, the abbreviations shall contain the letters "mm" immediately following the length value in millimeters.

Copyright National Electrical Manufacturers Association
Provided by IHS under license with NEMA
No reproduction or networking permitted without license from IHS
Not for Resale

B2.3 Bulb Diameter

Bulb diameter shall be entered directly following the above length without any separator. The bulb diameter information comprises two sub-parts. The first is a letter to indicate bulb's cross-sectional shape and the other part is the cross-sectional major diameter. The bulb shape is identified by a letter symbol as follows:

T Round cross-sectional tubular bulb
PG Power groove indented bulb

Bulb diameter values shall be entered in the conventional eighths-of-an-inch system.

For those special cases where it is necessary to identify bulb diameter in metric units, the abbreviation shall contain the letters "mm" immediately following the diameter value in millimeters.

B2.4 Lamp shape

Exceptions to the linear assumption, such as circular, U-Shape, and compact single-based lamps are called out with a special code in this length section of the abbreviation. Special descriptions are defined as follows:

U1	U-Shaped lamp, 1-5/8 inch leg centers
U3	U-Shaped lamp, 3-5/8 inch leg centers
U6	U-Shaped lamp, 6 inch leg centers
C8	Circular shaped lamp, 8 inch diameter of circle
C12	Circular shaped lamp, 12 inch diameter of circle
C16	Circular shaped lamp, 16 inch diameter of circle
T	Twin, Two parallel legs with a common base
Q	Quad, Four parallel legs, square, with a common base

As new lamps of similar design to the above are standardized, additional numerical values may be used within the established pattern. Radically new lamp shapes will necessitate the establishment of new letter codes and definitions in this clause.

B2.5 Lamp base

The lamp's base code may be used as part of the designation in certain cases. Those are the cases where the application of the lamp to the correct auxiliary circuit is controlled by means of the base on the lamp. The compact, single-based family of lamps, for example, employs a variety of bases for use in particular circuits. Proper base codes are noted in the base standard, ANSI C81.61.

B2.6 Circuit and/or special description

This part of the identification shall follow the slashed separator which follows the bulb diameter or the optional shape and base information when they are provided. It is intended to help the user associate the lamp with the correct auxiliary circuit.

This abbreviation system does not necessarily identify all circuits that a lamp manufacturer may have authorized for use with a particular lamp.

Lamps that are specified for operation at two separate wattage or current levels, on the same type of circuit, are identified in the abbreviation by the lower level only.

Copyright National Electrical Manufacturers Association
Provided by IHS under license with NEMA
No reproduction or networking permitted without license from IHS
Not for Resale

Typical circuit identifiers are:

RS	Rapid start
PH	Preheat start (starter)
IS	Bipin base, instant start
SP	Single pin base, instant start
HO	800 milliamperes and 1000 milliamperes, high output, rapid start
1.5A	1500 milliamperes, rapid start

Special descriptions may be necessary in certain cases to separate lamps of similar design. These special identifiers may be used in addition to the above circuit identifications, separated by a hyphen. Special descriptions are defined as follows:

B	Bactericidal lamp
CC	Cold cathode
LP	Low pressure
HP	High pressure

B.3 Sample abbreviations

Following are several sample abbreviations with explanations.

30W/36T12/RS	30 Watt, 36 Inch T12, Rapid Start
40W/22T12/U6/RS	40 Watt, 22 Inch T12, U-Shaped - 6 inch Leg, Center Spacing, Rapid Start
215W/96T12/1.5A	215 Watt, 96 Inch T12, 1500 mA, Rapid Start
37W/24T12/HO	37 Watt, 24 Inch T12, High Output, Rapid Start
116W/48T12/1.5A	116 Watt, 48 Inch T12, 1500 mA, Rapid Start
116W/48PG17/1.5A	116 Watt, 48 Inch PG17, 1500mA, Rapid Start
4W/6T5/PH	4 Watt, 6 Inch T5, Preheat Start
30W/36T8/PH-B	30 Watt, 36 Inch T8, Preheat Start, Bactericidal Lamp
40W/60T12/IS	40 Watt, 60 Inch T12, Bipin Base, Instant Start
75W/96T12/SP	75 Watt, 96 Inch T12, Single Pin, Instant Start
5W/4T4/T/G23/PH	5 Watt, 4 Inch T4, Twin, G23 Base, Preheat Start
13W/5T4/Q/G23-2/PH	13 Watt, 5 Inch T4, Quad, G23-2 Base, Preheat Start
36-39W/16T5/T/2G11/PH-RS	36-39 Watt, 16 Inch T5, Twin, 2G11 Base, Preheat or Rapid Start

Copyright National Electrical Manufacturers Association
Provided by IHS under license with NEMA
No reproduction or networking permitted without license from IHS
Not for Resale

ANNEX C
(informative)

Generic Designation System for Compact Fluorescent and T5 Twin Fluorescent Lamps

C.1 General

The National Electrical Manufacturers Association (NEMA) lamp companies have developed a short generic designation to identify compact and T5 twin fluorescent Lamps. This system is intended to simplify specification and re-ordering of lamps.

The lamp manufacturers plan to phase in the generic designations together with their own terminology in future lamp publications. Lamp specifiers and luminaire and ballast manufacturers are encouraged to use the shorter generic designations.

C.2 Compact Fluorescent Lamps

The generic designation system for compact fluorescent lamps consists of four parts:

Type + Shape + Wattage / Abbreviated Base Description

C.2.1 Type Lamp

Prefix "CF" is used for all types of compact fluorescent lamps that comply with the American National Standards Institute definition of a self-supporting lamp with a single base.

C.2.2 Lamp Shape

The prefix is completed by adding a shape designator chosen from the following:

T - Twin, two parallel tubes
Q - Quad, four parallel tubes in a square formation
S - Square shaped
M - Multiple parallel legs (not T or Q) with a single base

Copyright © 1997 by National Electrical Manufacturers Association
1300 North 17th Street, Suite 1847, Rosslyn, VA 22209

First Edition
December 1997

Copyright National Electrical Manufacturers Association
Provided by IHS under license with NEMA
No reproduction or networking permitted without license from IHS
Not for Resale

C.2.3 Lamp Wattage

The wattage is shown as nominal wattage followed by the letter "W".

C.2.4 Base Designation

A virgule "/" is used as a separator between the lamp wattage and base designation. An abbreviated base designation, after the "/" separator, can be used and is made up of the IEC designation which includes the number of pins, but excludes any keyway information. The base designation is essential to differentiate between lamps of the same wattage, but with different pin configurations. If lamps of the same wattage, base and pin configurations, have different electrical characteristics, then the full base designation is used.

C.3 T5 Twin Fluorescent Lamps

The T5 twin lamps are long lamps requiring an additional support to hold the lamp in place. They are not self-supporting by the base alone which differentiates them from compact fluorescent lamps.

C.3.1 Designation

The same parts are used to establish the designation as shown in C.2, except the prefix "FT" is used instead to describe these lamps as "fluorescent twin" types. The remaining parts of the designation system follow the same steps as in C.2.

C.3.2 Ballast Circuit

Some T5 twin fluorescent lamps are designed to operate on a specific type of ballast circuit. If necessary, this information is given after an additional "/" separator, using accepted abbreviations, such as RS (rapid-start).

C.4 Generic Designations

An equivalency table of ANSI data sheet designations is covered by the generic designation system shown in Table 1. This list is provided to assist in the use of the generic terminology in catalogs and on product and re-lamping labels for ballasts and luminaires.

Copyright © 1997 by National Electrical Manufacturers Association
1300 North 17th Street, Suite 1847, Rosslyn, VA 22209

Copyright National Electrical Manufacturers Association
Provided by IHS under license with NEMA
No reproduction or networking permitted without license from IHS
Not for Resale

TABLE 1 - Generic Designations for Compact and T5 Twin Fluorescent Lamps

TWIN		QUAD	
Generic Designation	**ANSI Data Sheet Designation**	**Generic Designation**	**ANSI Data Sheet Designation**
CFT5W/G23	5W/4T4/T/G23/PH	CFQ9W/G23	9W/4T4/Q/G23-2/PH
CFT7W/G23	7W/5T4/T/G23/PH	CFQ13W/GX23	13W/5T4/Q/GX23-2/PH
CFT9W/G23	9W/6T4/T/G23/PH		
CFT13W/GX23	13W/7T4/T/GX23/PH	CFQ10W/G24d	10W/5T4/Q/G24d-1/PH
		CFQ13W/G24d	13W/6T4/Q/G24d-1/PH
CFT5W/2G7	5W/4T4/T/2G7	CFQ18W/G24d	18W/7T4/Q/G24d-2/PH
CFT7W/2G7	7W/5T4/T/2G7	CFQ26W/G24d	26W/8T4/Q/G24d-3/PH
CFT9W/2G7	9W/6T4/T/2G7		
CFT13W/2GX7	13W/7T4/T/2GX7	CFQ15W/GX32d	15W/5T5/Q/GX32d-1/PH
		CFQ20W/GX32d	20W/6T5/Q/GX32d-2/PH
FT18W/2G11	18-20W/9T5/T/2G11/PH-RS	CFQ27W/GX32d	27W/7T5/Q/GX32d-3/PH
FT18W/2G11/RS	18W/10T5/T/2G11/RS		
FT24W/2G11	24-27W/13T5/5/2G11/PH-RS	CFQ10W/G24q	10W/5T4/Q/G24q-1
FT36W/2G11	36-39W/16T5/T/2G11/PH-RS	CFQ13W/G24q	13W/6T4/Q/G24q-1
FT40W/2G11/RS	40W/22T5/T/2G11/RS	CFQ18W/G24q	18W/7T4/Q/G24q-2
		CFQ26W/G24q	26W/8T4/Q/G24q-3
		CFQ15W/GX32q	15W/5T5/Q/GX32q-1
		CFQ20W/GX32q	20W/6T5/Q/GX32q-2
		CFQ27W/GX32q	27W/7T5/Q/GX32q-3

Copyright © 1997 by National Electrical Manufacturers Association
1300 North 17th Street, Suite 1847, Rosslyn, VA 22209

First Edition
December 1997

Copyright National Electrical Manufacturers Association
Provided by IHS under license with NEMA
No reproduction or networking permitted without license from IHS
Not for Resale