ANSI C78.388 90 ■ 0724150 0029838 4 ■

American National Standard

for Electric Lamps –
High-Pressure Sodium Lamps –
Methods of Measuring Characteristics

ANSI C78.388-1990

ANSI American National Standards Institute
1430 Broadway
New York , New York
10018

Copyright National Electrical Manufacturers Association
Provided by IHS under license with NEMA
No reproduction or networking permitted without license from IHS

Not for Resale

American National Standard

Approval of an American National Standard requires verification by ANSI that the requirements for due process, consensus, and other criteria for approval have been met by the standards developer.

Consensus is established when, in the judgment of the ANSI Board of Standards Review, substantial agreement has been reached by directly and materially affected interests. Substantial agreement means much more than a simple majority, but not necessarily unanimity. Consensus requires that all views and objections be considered, and that a concerted effort be made toward their resolution.

The use of American National Standards is completely voluntary; their existence does not in any respect preclude anyone, whether he has approved the standards or not, from manufacturing, marketing, purchasing, or using products, processes, or procedures not conforming to the standards.

The American National Standards Institute does not develop standards and will in no circumstances give an interpretation of any American National Standard. Moreover, no person shall have the right or authority to issue an interpretation of an American National Standard in the name of the American National Standards Institute. Requests for interpretations should be addressed to the secretariat or sponsor whose name appears on the title page of this standard.

CAUTION NOTICE: This American National Standard may be revised or withdrawn at any time. The procedures of the American National Standards Institute require that action be taken periodically to reaffirm, revise, or withdraw this standard. Purchasers of American National Standards may receive current information on all standards by calling or writing the American National Standards Institute.

Published by

American National Standards Institute
1430 Broadway, New York, New York 10018

Copyright © 1991 by American National Standards Institute
All rights reserved.

No part of this publication may be reproduced in any form, in an electronic retrieval system or otherwise, without prior written permission of the publisher.

Printed in the United States of America

APS5C191/21

Copyright National Electrical Manufacturers Association
Provided by IHS under license with NEMA
No reproduction or networking permitted without license from IHS

Not for Resale

ANSI C78.388 90 ■ 0724150 0029840 2 ■

ANSI®
C78.388-1990
Revision of
ANSI C78.388-1984

American National Standard
for Electric Lamps –

High-Pressure Sodium Lamps – Methods of Measuring Characteristics

Secretariat
National Electrical Manufacturers Association

Approved May 11, 1990
American National Standards Institute, Inc.

Copyright National Electrical Manufacturers Association
Provided by IHS under license with NEMA
No reproduction or networking permitted without license from IHS
Not for Resale

Contents

Page

Foreword iii

1 Scope and purpose 1

2 Normative references 1

3 Measurement of lamp voltage, current, and power 1

4 Measurement of lamp current crest factor 8

5 Measurement of starting voltage 9

6 Measurement of warm-up time 12

7 Testing lamps at maximum peak voltage across terminals 12

8 Measurement of maximum bulb and base temperature 15

9 Measurement of luminaire effect on lamp voltage rise 16

Figures

1 Reference ballast circuit for high-pressure sodium lamps 3

2 Circuit for measurement of lamp current crest factor 4

3 Circuit for measurement of starting voltage for a lamp requiring pulse start 4

4 Circuit for measurement of starting voltage for a lamp *not* requiring pulse start and the circuit for measurement of warm-up time 10

5 Circuit for measurement of maximum voltage limitation of a lamp requiring pulse start 13

6 Circuit for measurement of maximum voltage limitation of a lamp *not* requiring pulse start 14

Annex

A Bibliography 16

Copyright National Electrical Manufacturers Association
Provided by IHS under license with NEMA
No reproduction or networking permitted without license from IHS
Not for Resale

Foreword (This Foreword is not part of American National Standard C78.388-1990.)

During the development of American National Standards for high-pressure sodium lamps, Subcommittee C78-4 on High Intensity Discharge Lamps determined that the methods of testing described in ANSI C78.386 were inadequate for the committee's purposes, and recognized a need for the publication of a separate standard on methods of measuring high-pressure sodium lamp characteristics.

This revision of ANSI C78.388 reflects corrections to the terminals of instruments in the figures as well as the appropriate text.

This standard contains one annex. The annex consists of a bibliography of informative references, and is not considered to be part of this standard.

Suggestions for improvement of this standard will be welcome. They should be sent to the Secretary of C78, National Electrical Manufacturers Association, 2101 L Street, NW, Washington, DC, 20037.

This standard was processed and approved for submittal to ANSI by the Accredited Standards Committee on Electric Lamps, C78. Committee approval of the standard does not necessarily imply that all committee members voted for its approval. At the time it approved this standard, the C78 Committee had the following members:

Ted A. Pickett, Chairman
Alfred C. Rousseau, Vice-Chairman
Victoria Schofield, Secretary

Organization Represented	*Name of Representative*
Advance Transformer Company	Norm Grimshaw
Duro-Test Corporation	Herbert S. Strauss
ETL Testing Laboratories	Anthony DiNiro
General Electric Company	Ted A. Pickett
GTE Products Corporation	Robert P. Bonazoli
	Kendrick D. Rattray (Alt.)
Illuminating Engineering Society	Melvin Unglert
	J. E. Kaufman (Alt.)
National Electrical Manufacturers Association	Harry R. Lobdell
	W. H. Henshaw, Jr. (Alt.)
Philips Lighting Company	Alfred C. Rousseau
OSRAM Corporation	Peter A. Bleasby
Underwriters Laboratories, Inc.	Kevin Kanakos
Wilger Liaison Company, Inc.	Gerald M. Plank, Jr.

Subcommittee C78-4 on High-Intensity Discharge Lamps and Subcommittee C82-2 on High-Intensity Discharge Lamp Ballasts, both of which developed this standard, had the following members:

Robert D. Munson, Chairman C78-4
Ted Yahraus, Chairman C82-2
Victoria Schofield, Secretary

Organization Represented	*Name of Representative*
Advance Transformer Company	Norm Grimshaw
	Joseph Droho (Alt.)
American Electric / FL	Bill Bacon
Arkansas Power and Light Company	William Maguire
Crouse-Hinds, Division of Cooper Lighting	William Hitchcock
	Kenneth W. Simms (Alt.)
Day-Brite Lighting, Division of Thomas Industries	Robert D. Munson
	Ron Pettit (Alt.)
Duro-Test Corporation	Herbert S. Strauss
	Larry Sheinberg (Alt.)
ETL Testing Laboratories	Anthony DiNiro
	Steven Pasternak (Alt.)

Copyright National Electrical Manufacturers Association
Provided by IHS under license with NEMA
No reproduction or networking permitted without license from IHS
Not for Resale

Organization Represented	*Name of Representative*
General Electric Company	William W. Alexander
	Selmar Dorsey
	Michael M. Minarczyk
	David Korow (Alt.)
	Mike Owens (Alt.)
GTE Products Corporation	Warren Anderson
	William Simpson
	Sheppard Cohen (Alt.)
	Richard Parrott (Alt.)
Holophane Company	Charles WIlliams
	M. L. Tanner (Alt.)
Hubbell, Inc.	Joe Nuckolls
Indy Lighting, Inc.	Ted Yahraus
Innovative Controls, Inc.	Kirit Mody
	Al Ottenstein (Alt.)
Leviton Manufacturing Company	George Johnson
	Bernard Gershen (Alt.)
Lithonia/Hi-Tek Lighting	Fred Carpenter
MagneTek/Jefferson Electric	Marion Rosiak
Magnetek/Universal Manufacturing	Robert A. Kulka
	Adrian Weissman (Alt.)
OSRAM Corporation	Peter A. Bleasby
Philips Lighting Company	Sam Carleton
Underwriters Laboratories, Inc.	Paul Johnson (C78-4)
	John Marshall (C82-2)
Valmont Electric Company	Chacko T. Oommen
	Fritz Freidenstein (Alt.)
Venture Lighting International	Thomas Harding
Whiteway Manufacturing Company	Honesto Quiogue

Copyright National Electrical Manufacturers Association
Provided by IHS under license with NEMA
No reproduction or networking permitted without license from IHS
Not for Resale

American National Standard for Electric Lamps –

High-Pressure Sodium Lamps – Methods of Measuring Characteristics

1 Scope and purpose

1.1 This standard describes the procedures to be followed and the precautions to be observed in measuring the characteristics of high-pressure sodium lamps as specified in American National Standards covering these lamps (see section 2).

1.2 It is the purpose of this standard to outline methods of measurement that will make it possible to obtain reproducible and accurate measurements of high-pressure sodium lamp characteristics.

1.3 Deviations from the procedures given in this standard are permissible for production or other testing, provided that the methods used give results in substantial agreement with the methods given herein.

2 Normative references

The following standards contain provisions which, through reference in this text, constitute provisions of this American National Standard. At the time of publication, the editions indicated were valid. All standards are subject to revision, and parties to agreements based on this American National Standard are encouraged to investigate the possibility of applying the most recent editions of the standards indicated below.

ANSI C78.25-1983, *Electric lamps – Method of measuring lamp-base temperature rise*

ANSI C78.1300 Series, *American national standards for high-pressure sodium lamps*

ANSI C82.5-1983, *Reference ballasts for high-intensity-discharge lamps*

ANSI MC96.1-1982, *Temperature measurement thermocouples*

ANSI/UL 496-1986, *Standard for safety – Edison-base lampholders*

3 Measurement of lamp voltage, current, and power

3.1 General

This section covers the measurement of lamp current, voltage, and power for high-pressure sodium lamps as measured on a reference ballast having a sinusoidal voltage input. In order to start the lamp on a reference ballast, a voltage higher than the specified voltage may be required. An external starting aid, (for example, a Tesla coil) is preferred.

3.2 Power supply

3.2.1 Wave shape

The ac power supply shall have a voltage wave shape such that the root-mean-square (rms) summation of the harmonic components will not exceed 3% of the fundamental.

3.2.2 Voltage regulation

The line voltage should be as steady and free from changes as possible. For best results, the voltage shall be regulated to within ±0.1%. If adequate automatic regulation is not available, constant checking and readjustments are essential if accurate measurements of lamp characteristics are to be obtained.

Copyright National Electrical Manufacturers Association
Provided by IHS under license with NEMA
No reproduction or networking permitted without license from IHS
Not for Resale

3.2.3 Power source impedance

The power supply impedance, as measured at the point where the reference ballast and lamp are connected, shall not exceed 2% of the reference ballast impedance. This requires that variable autotransformers or other voltage transformation devices have a kVA rating of at least five times the normal lamp wattage to ensure compliance with the preceding requirements.

3.3 Ambient condition

The ambient in which the lamp is operated shall be maintained at 25° C ± 5° C, and shall be draft-free.

3.4 Ballasts

3.4.1 When the electrical characteristics of a high-pressure sodium lamp are being measured, the lamp shall be operated with a reference ballast of the appropriate rating. The use of a ballast having different characteristics (even though of the same impedance) can materially alter the electrical characteristics of the lamp. For the proper reference ballast to be used, refer to the appropriate ANSI standard for high-pressure sodium lamps, ANSI C78.1300 Series, and to ANSI C82.5.

3.4.2 If electrical readings are to be taken on a lamp of a size for which no American National Standard exists, the ballast used shall be one complying with the general requirements for high-intensity-discharge lamp reference ballasts and having an impedance appropriate for the lamp.

3.4.3 For special purposes, it may be desirable to determine the electrical characteristics of lamps when they are operated by other than reference ballasts. If this is done, it must be remembered that such results are meaningful only for the particular ballast and circuit with which they are obtained.

3.4.4 When the electrical characteristics of a lamp are to be obtained at nominal lamp wattage, the lamp shall be operated with its reference ballast. The nominal wattage level is achieved by adjustment of the input voltage to the reference ballast. The input voltage shall not, however, be adjusted below the minimum necessary for stable lamp operation.

3.5 Circuits and equipment grounding

3.5.1 An acceptable operating circuit for a high-pressure sodium lamp is shown in figure 1. The reference ballasts used for lamp measurement are the series-reactor type and do not include step-up transformers. In many cases, a separate transformer may be needed to provide the line voltage required by the reference ballast.

3.5.2 The method of connecting the instruments in the circuit is shown in figure 1. In this method, the voltmeter that measures lamp voltage and the potential element of the wattmeter are connected on the lamp side of the current-measuring instruments. Switches shall be provided so that each instrument element can be removed from the circuit when the instrument is not being read. These switches shall have a maximum resistance of 0.01 ohm, as determined by the operating volt-amp method (Vrms/Irms), and shall be well maintained to preserve this property.

3.5.3 Reference ballasts may be set up either with or without the impedance of the ammeter and wattmeter current coils included in the measured ballast characteristics. Either procedure is satisfactory, but it is important that instrument corrections be determined for the particular method being used (see 3.9). If the impedances of the ammeter and wattmeter current coils are included in the ballast impedance, these instrument coils shall be left in the circuit at all times.

3.5.4 In order to minimize the possibility of electrical shock, it is essential that careful attention be paid to the proper grounding of the electrical circuit and to certain instruments that may be used. It is especially important to make sure that electronic or other instruments having exposed metal cases always have the exposed metal parts connected to ground.

3.5.5 In the circuit shown in figure 1, the power supply is a two-wire system connected to the test circuit through an isolation transformer. The power supply used may or may not have one of the phase conductors at ground potential; either type of supply can be used satisfactorily since the isolation transformer separates the measurement circuit from the power source. The instrument side of the measurement circuit may be grounded, or if all

Copyright National Electrical Manufacturers Association
Provided by IHS under license with NEMA
No reproduction or networking permitted without license from IHS
Not for Resale

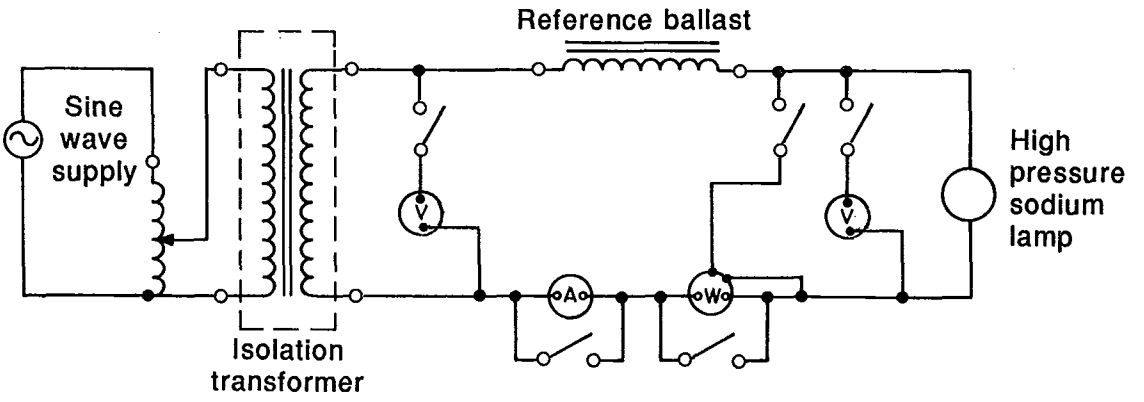

NOTE – Current terminals of instruments are shown as ○. Potential terminals of instruments are shown as ●.

Figure 1 – Reference ballast circuit for high-pressure sodium lamps

instrument terminals are adequately insulated, it may be left "floating" (that is, with neither side connected to ground).

3.5.6 Oscilloscopes and peak-reading voltmeters, as shown in figures 2 and 3, usually have to have one of the input terminals at ground potential. The use of the isolation transformer, described in 3.5.5, allows connection of any part of the test circuit to ground.

3.5.7 To minimize electrical shock hazard, it is essential that the exposed metal case of the oscilloscope or any other instruments always be connected to ground.

3.5.8 To eliminate the possibility of ground loops, it is essential that a single ground connection be used to ground the exposed metal case of the instrument, the instrument input terminal, and the measurement circuit.

3.5.9 Wherever the circuit permits, the lampholder shell shall be connected to the grounded side of the measurement circuit.

3.6 Lamp position

3.6.1 Reference ballast impedance values have been standardized for vertical and horizontal operation only. For lamp measurements, the lamp shall be operated in either the vertical or horizontal position. If a lamp is marked to designate a specific operating position, it shall be tested in that position.

3.7 Lamp stabilization

3.7.1 General

The stabilization requirements of 3.7.2 are applicable to any lamp, regardless of its accumulated burning time. The requirements are general but should be adhered to unless the lamp manufacturer gives other instructions. The stabilization requirements do not supplant the initial 100-hour lamp-seasoning requirements for reference measurements.

3.7.2 Stabilization requirements

a) Before any measurements are taken, the lamp shall be operated until the performance characteristics are stable. Stabilization is determined by monitoring the lamp's electrical characteristics after the first hour of operation, and at 10- to 15- minute intervals thereafter until a change of 1% or less is observed in three successive measurements.

b) If a lamp is warmed up on one ballast and then transferred, without extinguishing, to a reference ballast for measurement, an additional period of burning in the measurement circuit is usually necessary to bring the lamp to equilibrium. The additional burning period can be kept to a minimum if the ballast used for warm-up operates the lamp at essentially the same wattage as the reference ballast.

Copyright National Electrical Manufacturers Association
Provided by IHS under license with NEMA
No reproduction or networking permitted without license from IHS
Not for Resale

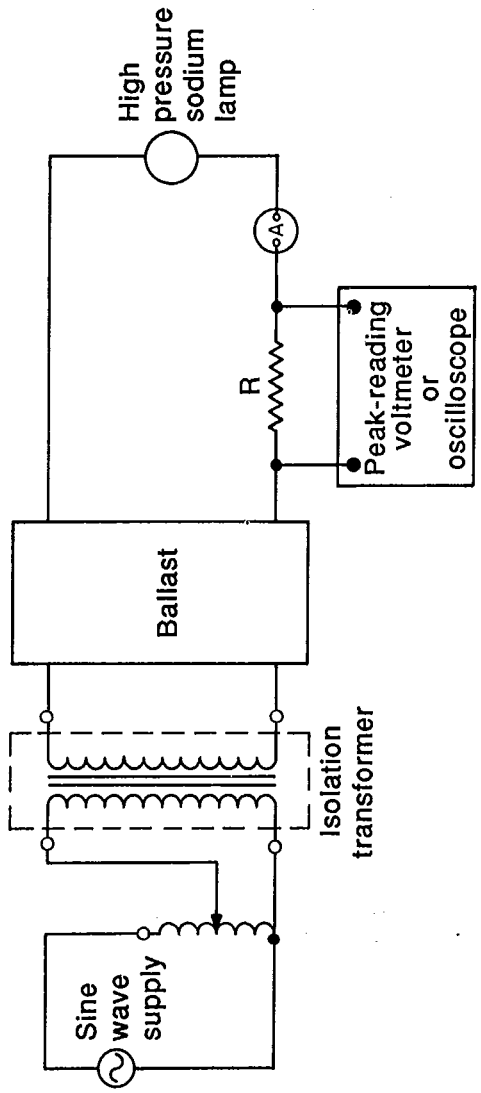

NOTE – Current terminals of instruments are shown as ○. Potential terminals of instruments are shown as ●.

WARNING – Refer to 3.5.4 through 3.5.9 for circuit and equipment grounding procedures.

Figure 2 – Circuit for measurement of lamp current crest factor

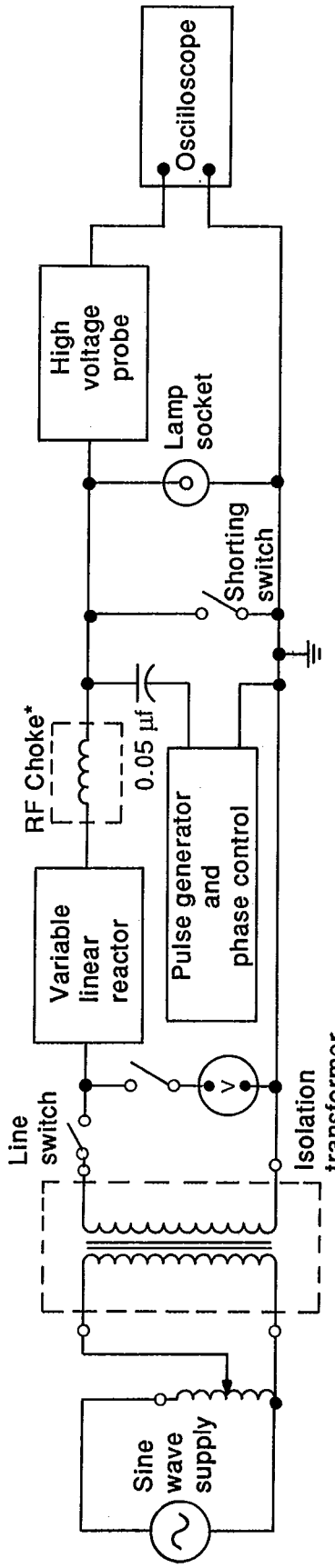

* Optional device to minimize ringing.

NOTE – Current terminals of instruments are shown as ○. Potential terminals of instruments are shown as ●.

WARNING – Refer to 3.5.4 through 3.5.9 for circuit and equipment grounding procedures.

Figure 3 – Circuit for measurement of starting voltage for a lamp requiring pulse start

Copyright National Electrical Manufacturers Association
Provided by IHS under license with NEMA
No reproduction or networking permitted without license from IHS

Not for Resale

c) The lamp shall be measured in effectively open air, sufficiently removed from reflecting surfaces or sources of radiation that cause additional heating of the cold spot, and a resultant shift in electrical characteristics.

d) If for any reason a lamp must be relocated for further measurements, a cooling period of at least 1 hour is required before any movement is made. This ensures that the amalgam will not become dislodged. The lamp shall again be brought to a stabilized operating condition, as described in 3.7.2(a), before measurements are taken.

e) If the lamp orientation is changed in any way, stabilized operation shall again be confirmed before any measurements are taken. This is necessary because of the possibility of a change in cold-spot position and temperature with any change in operating position.

3.8 Instruments

3.8.1 Accuracy

Instruments shall be selected that have any accuracy of better than 0.75% over a minimum frequency range of 40 to 1000 Hz. Scale calibration is essential to obtain accurate results.

3.8.2 Impedance limitations

3.8.2.1 High impedance of potential circuit and low impedance of current circuits are desirable to reduce the disturbance of the circuit caused by the presence of the instruments.

3.8.2.2 Instruments connected in parallel with the lamp shall maintain rated accuracy up to a frequency of at least 1000 Hz and shall not draw more than 1.0% of the rated lamp current. If corrections for the presence of the instrument in the circuit (see 3.9) are to be avoided, this current drain shall be limited to a maximum of 0.50% of the rated lamp current.

3.8.2.3 Instruments connected in series with the lamp shall have (unless their impedance has been included as part of the reference ballast impedance) an impedance such that the voltage drop does not exceed 1% of the rated lamp voltage. If corrections for the presence of the instrument in the circuit (see 3.9) are to be avoided, this voltage drop shall be limited to a maximum of 0.50% of the rated lamp voltage. When the impedance of the instrument is included as part of the reference ballast impedance, these restrictions do not apply, and no correction need be made to compensate for the presence of the instrument in the circuit.

3.8.2.4 Digital and other electronic test instruments are susceptible to burnout due to ballast starting pulse voltages and high line voltage. Therefore, necessary precautions should be taken to have them in the circuit only during lamp measurements.

3.8.3 Root-mean-square (rms) measurements

The voltage and current of a high-pressure sodium lamp have distorted wave shapes that depart considerably from a true sine wave. Therefore, the instruments used in the lamp circuits shall be of a type whose deflection depends upon the rms value of the wave. Instruments whose scales are calibrated in rms values but whose deflections depend upon average or peak values shall not be used.

3.9 Corrections to compensate for presence of instruments in the lamp circuit

3.9.1 General

If the electrical measuring instruments used in a high-pressure sodium lamp circuit have impedances within the limits specified in 3.8 (that is, for potential coils a current drain not exceeding 0.50% of rated lamp current, and for current coils a voltage drop not exceeding 0.50% of rated lamp volts), it will not be necessary to make any corrections to compensate for the presence of the instruments in the circuit.

If the instrument impedances do not meet the above restrictions, corrections may be needed, and the magnitude of these corrections can usually be determined by the restoration-of-light method. The accuracy of this method is somewhat dependent on the stability of the light output of the particular lamp being measured, but the method will normally be useful wherever the correction to be determined exceeds approximately 1% of the electrical value being measured. The restoration-of-light method can be used for measurements on reference ballasts or on any ballast on which

Copyright National Electrical Manufacturers Association
Provided by IHS under license with NEMA
No reproduction or networking permitted without license from IHS
Not for Resale

lamp characteristics vary significantly with changes in line voltage.

3.9.2 Restoration-of-light method

The restoration-of-light method is one in which a suitable photoelectric cell and meter are used to measure the relative light output of the lamp. The photoelectric cell should be one that has been selected and calibrated to determine that its spectral response, linearity, and fatigue characteristics meet the requirements of the test. The test should be made with the lamp in an integrating sphere or enclosure. The procedure is as follows:

a) Set the proper rated line voltage across the lamp and reference ballast.

b) Note the relative light output of the lamp as indicated by the photoelectric-cell reading.

c) Insert the instrument (ammeter, voltmeter, or wattmeter) and, with line voltage held constant, observe and record the instrument indication after a 5-minute stabilization period.

d) Readjust the line voltage until the output of the photoelectric cell is stabilized at the same reading as it was before the instrument was inserted.

e) Record the reading of the instrument under this new condition; within very close limits, this value will be the same as the one that would have been obtained at rated line voltage if the instrument did not alter the lamp circuit.

f) Remove the instrument from the circuit and recheck (a) and (b) above. The output indication of the photoelectric cell should agree with the one originally obtained.

The difference between the instrument indication recorded in (e) and the one recorded in (c) may be the one used as an instrument correction to be added to (or subtracted from) observations made when holding rated line voltage. This correction, of course, applies only to the particular instrument when used with that size of lamp.

It should be noted that the reading for only one instrument at a time can be obtained by the foregoing procedure. Also, instrument scale corrections must still be applied. For a wattmeter, the power taken by its potential circuit (E^2/R) shall be subtracted from the correction that has been determined. (This assumes that the wattmeter coils have been connected as shown in figure 1.)

The exact procedure to be followed also depends upon whether the instrument current coils are or are not included in the reference ballast impedance. The procedure is somewhat different for each of the three instruments in the lamp circuit, as outlined in 3.9.3, 3.9.4, and 3.9.5.

3.9.3 Correction for lamp ammeter reading

3.9.3.1 If the impedances of the current coils have been included in the measured impedance of the reference ballast, no correction is needed for the presence of this instrument (that is, the restoration-of-light method should not be used). The ammeter shall be left in the circuit at all times.

3.9.3.2 If the impedances of the current coils have not been included in the reference ballast impedance, and if the voltage drop across the ammeter exceeds 0.50% of rated lamp voltage, the ammeter correction should be obtained by the restoration-of-light method. The ammeter should not be left in the circuit while readings of other instruments are being taken.

3.9.4 Correction for lamp voltmeter reading

Regardless of which procedure is followed for the current coils, the correction for the voltmeter reading, if one is needed, is obtained by using the restoration-of-light method. The voltmeter should not be left in the circuit while readings of other instruments are being taken if its current drain impacts readings of other instruments by more than 0.5 %.

3.9.5 Correction for lamp wattmeter reading

3.9.5.1 If the current coils have been included in the measured reference ballast impedance, the wattmeter current coil shall be left in the circuit at all times, and no correction need be made for the presence of this coil. The correction for the presence of the potential coil (if a correction is needed) may be obtained by using the restoration-of-light method and then

Copyright National Electrical Manufacturers Association
Provided by IHS under license with NEMA
No reproduction or networking permitted without license from IHS

Not for Resale

subtracting the power (E^2/R) in the potential circuit. (This assumes wattmeter connections as shown in figure 1.) The potential coils should not be left in the circuit while readings of other instruments are being taken.

3.9.5.2 If the current coils have not been included in the measured reference ballast impedance, the correction for both the current and potential coils (if corrections are needed) may be determined at the same time by the restoration-of-light method. The power in the potential coil (E^2/R) must be subtracted from the correction obtained. (Again, this assumes wattmeter connections as shown in figure 1.) The wattmeter potential coil and current coil should not be left in the circuit while readings of other instruments are being taken.

3.9.5.3 The increase in wattage when the light output is restored will sometimes be very nearly equal to the decrease when E^2/R is subtracted; when this is so, it is then possible in routine work to omit both corrections and to use the wattmeter readings directly. (An instrument scale correction, of course, must still be made.)

3.9.5.4 In some cases it may be desirable to connect the lamp wattmeter so that its potential coil is on the input side of the current coil (instead of on the output side, as shown in figure 1). If this is done, then the procedures recommended in 3.9.5.1 and 3.9.5.2 should be modified by subtracting the loss in the current coil (I^2/R) instead of the loss in the potential coil.

3.10 Measurement of lamp amperes and volts at nominal lamp wattage

3.10.1 Preferred method

The lamp shall be operated at three or more wattage levels sufficiently dispersed within a range of ±7% of nominal wattage until stable operation is obtained at each wattage level. This is achieved by adjusting the input voltage to the reference ballast or linear reactor. (The input voltage shall not be set below the specified level for stable lamp operation.)

3.10.1.1 The lamp watts, volts, and amperes shall be recorded for each successive wattage setting for which stable operation has been obtained (see 3.7).

3.10.1.2 The characteristic plot of lamp volts versus lamp watts is a straight line. If the plotted values do not fall in a straight line, the voltage (and amperes) do not represent stable lamp operation. If such is the case, repeat 3.10.1 until a straight-line plot is obtained, or plot a representative lamp characteristic by drawing a *best fit straight line* through the data points. The characteristic lamp voltage is represented by the value at which the lamp characteristic crosses the nominal wattage level.

3.10.1.3 If a proper lamp characteristic has been obtained, plot the values of lamp current versus lamp watts. The level at which this trace crosses the nominal wattage represents the characteristic lamp current.

3.10.1.4 All instruments should be out of the circuit during lamp operation and be applied only one at a time when measurements are made, subject to the limitations and corrections of 3.8 and 3.9.

3.10.2 Alternate Method

The lamp shall be operated at its nominal wattage level until stable operation is obtained. This is achieved by adjusting the input voltage to the reference ballast or linear reactor. (The input voltage shall not be set below the specified level for stable lamp operation.)

3.10.2.1 After the initial adjustment of nominal lamp wattage, further adjustments shall be made at 5- to 15-minute intervals until no further adjustment is required for the lamp to remain at normal wattage. This represents the stable lamp operating condition.

3.10.2.2 When the lamp has reached the stable operating condition, the wattage shall be read first and should be within ±1% of nominal value to assure a 1% accuracy in lamp voltage. The wattage reading should be rechecked after reading the lamp voltage and current. If the wattage level has drifted by more than 0.5%, the wattage should be readjusted and the voltage and current measurements repeated 5 to 15 minutes after the readjustment. When no drift in wattage is observed, the lamp voltage and current values are established for operation at nominal lamp wattage.

3.10.2.3 All instruments should be out of the circuit during lamp operation and be applied

Copyright National Electrical Manufacturers Association
Provided by IHS under license with NEMA
No reproduction or networking permitted without license from IHS
Not for Resale

only one at a time when measurements are made, subject to the limitations and corrections of 3.8 and 3.9.

3.11 Measurement of lamp amperes, volts, and watts for operation on the reference ballast

The voltage specified for the reference ballast is supplied across the lamp and reference ballast. The lamp is operated in this circuit until it is brought to a stabilized operating condition.

3.11.1 If the ammeter and wattmeter current coils have been included in the measured reference ballast impedance, the coils shall remain in the circuit at all times. The lamp current may be read directly when the lamp has reached stable operation. The voltmeter and wattmeter and wattmeter potential coils should be applied one at a time for measurement, subject to the limitations and corrections of 3.8 and 3.9.

3.11.2 If the ammeter and wattmeter current coils have not been included in the measured reference ballast impedance, these coils, as well as the voltmeter and wattmeter potential coils, should be taken out of the circuit. When measurements are made, each instrument should be applied one at a time, subject to the limitations and corrections of 3.8 and 3.9.

4 Measurement of lamp current crest factor

4.1 General

Limits of current crest factor are given in the appropriate lamp standard in the ANSI C78.1300 Series.

4.1.1 Methods of measurement

The following two methods can be used to measure current crest factor:

Method A. Peak-reading voltmeter and rms ammeter.

Method B. Oscilloscope and rms ammeter, or oscilloscope, current probe, and rms ammeter.

The accuracy of the test method depends on the instrumentation. The use of an analog oscilloscope can limit the accuracy of Method B to approximately 5% of the measured value. This accuracy can be improved by calibrating the system with a sine-wave current of approximately the same peak current as the value to be measured. A digitizing oscilloscope, with high resolution, can be used to measure the peak current without the need for system calibration. With a CRT readout this instrument combines the best features of Methods A and B.

4.1.2 General circuit

A generalized circuit is shown in figure 2. Other instruments may be needed to ensure that the lamp-ballast combination is operating as desired.

The ammeter shall read true rms current and shall maintain rated accuracy up to a frequency of at least 1000 Hz.

The resistance *R* should be noninductively wound and shall not change resistance during measurements. Resistance *R* shall be accurately known, and the value shall be such that when it is carrying rated lamp current, the voltage across it will not exceed 0.50% of rated lamp voltage. A resistance of 0.100 ohm, rated at 15 amperes, is commonly used.

To obtain accurate instrument readings, care should be taken to ensure that effects from stray electromagnetic radiation emanating from ballast components are kept to a minimum.

4.2 Method A – Peak-reading voltmeter and rms ammeter

a) Place a calibrated, peak-reading voltmeter across *R*, as shown in figure 2.

b) With the lamp operating as desired, read the rms current, as indicated by the ammeter and the peak volts across *R*. The two readings should be taken closely together in time.

c) The peak current may be found as follows: Record the peak volts across *R*, either directly from the meter reading or (as is usually the case) by dividing the peak-to-peak reading by 2. Then divide the peak volts by *R* to obtain peak current in amperes.

d) To obtain crest factor, divide peak amperes by rms amperes.

Copyright National Electrical Manufacturers Association
Provided by IHS under license with NEMA
No reproduction or networking permitted without license from IHS

Not for Resale

4.3 Method B – Oscilloscope and rms ammeter; oscilloscope, current probe, and rms ammeter

4.3.1 Oscilloscope and rms ammeter

a) Connect an oscilloscope, calibrated in volts per unit of vertical deflection, across the resistor *R*, as shown in figure 2.

b) With the lamp operating as desired, read the rms current as indicated by the ammeter, and find the peak volts across *R* measuring the height of the wave trace from peak to peak; to find peak height, divide by 2. (If the trace height is measured in centimeters, multiply the peak height by the sensitivity of the oscilloscope in volts per centimeter to determine peak volts.) The two readings should be taken closely together in time.

c) The peak current may be found as follows: Divide the peak volts by *R* to obtain peak current in amperes.

d) To obtain the crest factor, divide peak amperes by rms amperes.

4.3.2 Oscilloscope, current probe, and rms ammeter

a) Resistor *R* is eliminated from the circuit in figure 2.

b) With the lamp operating as desired, read the rms current as indicated by the ammeter. With the current probe connected to the oscilloscope, as defined by the probe instructions, clamp the probe around one of the lamp lead wires. The oscilloscope will be calibrated in amperes per unit of vertical deflection. Find the peak current through the lamp by measuring the height of the wave trace from peak to peak, and divide this value by 2. The two readings should be taken closely together in time.

c) To obtain the crest factor, divide peak amperes by rms amperes.

4.4 Measurement of lamp current crest factor during lamp warm-up

The methods for making this measurement are the same as those described in 4.1 through 4.3, except that the readings of rms amperes and peak current shall be made between 5 and 15 seconds after the lamp arc has struck.

5 Measurement of starting voltage

5.1 General

In any group of lamps of a given type, the starting voltage can vary considerably from one lamp to another. Therefore, if the starting-voltage characteristics of a large group of lamps (such as a batch of lamps offered for sale or a manufacturer's whole production of a given type) are to be determined, it is necessary to test a sample of lamps; this sample shall be selected to be statistically representative of the total quantity.

If only a single lamp is to be checked, the procedure is still the same as that outlined in 5.2 through 5.4, but the comments on the "group" requirements are not relevant.

Conditions and limits for the lamp starting voltage are given in the appropriate lamp standard in the ANSI C78.1300 Series.

5.2 Conditioning of lamps for starting test

a) Regardless of whether lamps are new or have been previously tested for starting, they shall be seasoned by operation for at least 20 minutes at room temperature. Seasoning, as defined in this section, refers to the aging of a lamp by operating it within ±10% of the wattage obtained when operating it on a reference ballast.

b) Before being tested at a given temperature, the lamps shall remain at the test temperature for a minimum of 6 hours, preferably overnight. The test chamber shall be maintained at the given temperature throughout the duration of the test.

5.3 Test equipment and power supply

5.3.1 Lamps requiring pulse start

a) Refer to figure 3 for the test circuit. The principles of circuit and equipment grounding, as outlined in 3.5.4 through 3.5.9, shall be followed in setting up this circuit.

b) The power supply shall have a sinusoidal voltage wave shape and shall meet the requirements of 3.2.

c) The ballast may be either the specified reference ballast or a linear reactor for which the short-circuit current with minimum specified rms voltage input equals nominal

Copyright National Electrical Manufacturers Association
Provided by IHS under license with NEMA
No reproduction or networking permitted without license from IHS
Not for Resale

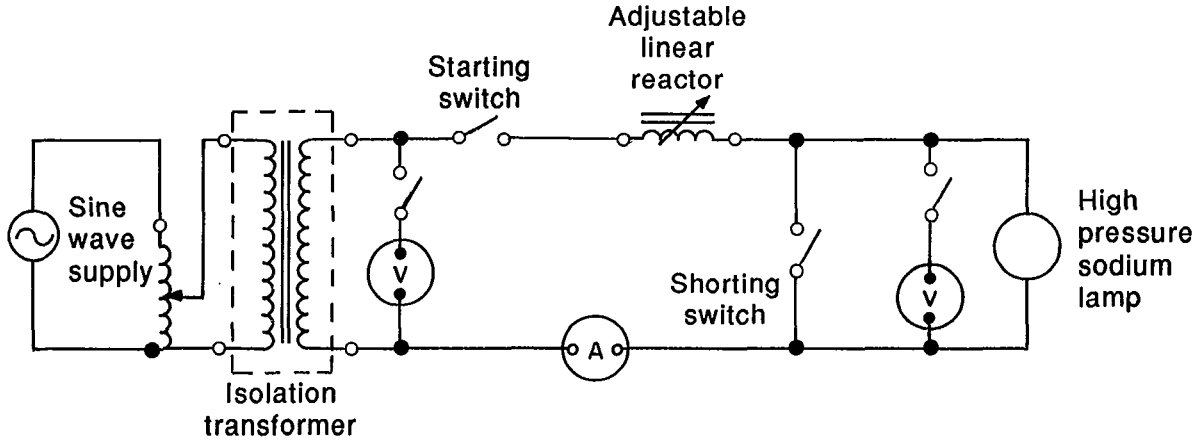

NOTE – Current terminals of instruments are shown as ○. Potential terminals of instruments are shown as ●.

WARNING – Refer to 3.5.4 through 3.5.9 for circuit and equipment grounding procedures.

Figure 4 – Circuit for measurement of starting voltage for a lamp *not* requiring pulse start and the circuit for measurement of warm-up time

lamp current within the tolerance range of +20% to -0%.

d) A square wave voltage pulse generator, with variable control of pulse height and width, shall be used. The maximum allowable variation in pulse height due to ringing shall be ±50 volts. Pulse specifications are given in the appropriate lamp specifications.

One pulse shall be generated in each cycle of the input voltage. The phase control circuit permits positioning the voltage pulse on the input voltage wave form, as specified in the appropriate lamp standard.

The pulse is applied to the lamp through the eyelet terminal with the base shell grounded.

e) An oscilloscope shall be used to display the input voltage trace with the coupled voltage pulse. The oscilloscope system (scope and high-voltage probe) shall have a minimum bandwidth of 35 megahertz and a rise time of 20 nanoseconds or less. The step-down ratio and probe compensation should be carefully adjusted prior to use.

f) The voltmeter shall meet the requirements of 3.8.

5.3.2 Lamps *not* requiring pulse start

a) A generalized test circuit is shown in figure 4. The principles of circuit and equipment grounding, as outlined in 3.5.4 through 3.5.9, shall be followed in setting up this circuit.

b) The power supply shall have a sinusoidal voltage wave shape and shall meet the requirements of 3.2.

c) The ballast may be either the specified reference ballast or a linear reactor for which the short circuit current with minimum specified rms voltage input equals nominal lamp current within the tolerance range of +20% to -0%.

d) The voltmeters and ammeter shall meet the requirements of 3.8.

5.4 Procedures

5.4.1 Procedure A for lamps requiring pulse start

This procedure shall be used to determine whether or not a lamp will start under the conditions specified in the appropriate lamp standard:

a) With the line switch closed, set the open-circuit voltage to the rms starting voltage specified in the appropriate lamp standard. Open the line switch.

b) Close the shorting switch to short out the lamp socket, and then close the line switch.

Copyright National Electrical Manufacturers Association
Provided by IHS under license with NEMA
No reproduction or networking permitted without license from IHS
Not for Resale

Adjust the variable reactor, if used, to give rated lamp current.

c) Open the line switch and open the shorting switch.

d) With no lamp in the socket, close the line switch, and adjust the starting pulse to the specified value set forth in the appropriate lamp standard. In most cases, the oscilloscope high-voltage probe will serve as the required dummy lamp load. Open the line switch.

e) Place the lamp to be tested in the socket.

f) Close the line switch. If the lamp does not start within the time specified in the appropriate lamp standard, the lamp has failed the test.

5.4.2 Procedure B for lamps requiring pulse start

This procedure is used to determine the minimum starting voltage of a lamp. The procedure specifies a sweep voltage rather than the conventional step voltage as the means of increasing the test voltage level. Deviating from this procedure can result in erroneous starting voltage data.

a) With the line switch closed, set the open-circuit voltage to the minimum rms starting voltage indicated in the appropriate lamp standard in the ANSI C78.1300 Series. Open the line switch.

b) Close the shorting switch to short out the lamp socket, and then close the line switch. Adjust the variable reactor, if used, to give rated lamp current.

c) Open the line switch and open the shorting switch.

d) With no lamp in the socket, close the line switch, and adjust the pulse to the specified values set forth in the appropriate lamp standard. In most cases, the oscilloscope high-voltage probe will serve as the required dummy lamp load.

e) Reduce the pulse height so that a minimum pulse height is available at the socket (approximately zero). Open the line switch.

f) Place the lamp to be tested in the socket.

g) Close the line switch. Slowly increase the pulse height from the minimum value until the lamp starts. Discontinue raising the pulse height as soon as the lamp starts.

h) Open the line switch. Remove the lamp from the socket with caution as the high-voltage pulse is still impressed across the socket. Close the line switch, and measure the starting voltage displayed on the oscilloscope.

5.4.3 Procedure A for lamps *not* requiring pulse start

This procedure shall be used to determine whether or not a lamp will start at the minimum ballast open-circuit voltage set forth in the appropriate lamp standard in the ANSI C78.1300 Series:

a) With the starting switch open, set the open-circuit voltage to the minimum ballast open-circuit voltage specified in the appropriate lamp standard.

NOTE – Pending the issuance of the appropriate standards, consult the lamp manufacturer for minimum ballast open-circuit voltage and rated lamp current.

b) Place the lamp to be tested in the socket.

c) Close the shorting switch to short out the lamp socket, and then close the starting switch. Adjust the reactor to give rated lamp current at the chosen voltage.

d) Open the lamp-starting switch, open the shorting switch, and then reclose the starting switch.

e) Record the lamp as starting if the voltage across the lamp falls to approximately 20 volts within 30 seconds. If the voltage remains high or does not fall to a steady low value, the lamp is recorded as nonstarting; it has failed this starting test.

5.4.4 Procedure B for lamps *not* requiring pulse start

This procedure shall be used to determine the minimum starting voltage of a lamp.

a) Place the lamp to be tested in the socket.

b) With the starting switch open and the open-circuit voltmeter switch closed, set the open-circuit voltage to a value at which the

Copyright National Electrical Manufacturers Association
Provided by IHS under license with NEMA
No reproduction or networking permitted without license from IHS
Not for Resale

lamp is not expected to start at the test temperature.

c) Close the shorting switch to short out the lamp socket, and then close the starting switch. Adjust the reactor to give reference lamp current at the chosen voltage.

d) Open the lamp-starting switch, open the shorting switch and then reclose the starting switch.

e) Record the lamp as starting if the voltage across the lamp falls to approximately 20 volts within 10 seconds. If the voltage remains high or does not fall to a steady low value, the lamp is recorded as nonstarting.

f) After testing the lamp at the lowest applied voltage, increase the open-circuit voltage by 5 volts for a 100-volt or lower nominal lamp; by 10 volts for a 125- to 135- volt nominal lamp, or by 20 volts for a 265- volt nominal lamp, and repeat steps (c), (d), and (e) for the lamp that did not start at the lower voltage. Continue to increase test voltages in 5-, 10-, or 20- volt increments (whichever is appropriate for the lamp being tested) until the lamp starts. A minimum time of 2 minutes shall elapse between successive application of voltage.

6 Measurement of warm-up time

6.1 General

The method described in this section is intended as an evaluation of the lamp itself and is independent of the effects of commercial luminaires and ballasts.

The established requirements for lamp warm-up time are stated in the appropriate lamp standard in the ANSI C78.1300 Series.

6.2 Test conditions

a) The lamp shall be tested in the operating position specified in the appropriate lamp standard in the ANSI C78.1300 Series.

b) The lamp shall be tested in still air at the specified ambient temperature.

c) The power supply circuit shall be capable of delivering the specified sine-wave voltage throughout the duration of the test. Use the circuit in figure 4 for the warm-up test. An auxiliary means of ignition will be needed for lamps requiring a pulse start.

6.3 Preparation of lamps for warm-up test

a) If the lamps are new or have been burned in a position other than what is specified in the appropriate lamp standard in the ANSI C78.1300 Series, they shall be seasoned for at least 10 hours in the proper orientation prior to testing.

b) If the lamps have been previously burned in the proper test orientation for the specified time, or have been tested previously for warm-up, they shall be seasoned for at least 20 minutes at room temperature prior to testing.

c) Before testing, the lamps shall remain in the same orientation in which they were seasoned while remaining at the test temperature for a minimum of 1 hour.

6.4 Procedure

a) Lamps shall be operated with the specified reference ballast and rms sine-wave power supply described in the appropriate lamp standard. The line voltage shall be held constant at the specified value throughout the test.

b) Warm-up time shall be measured from the moment at which the arc strikes to the time when the lamp voltage reaches the value specified in the appropriate lamp standard.

7 Testing lamps at maximum peak voltage across terminals

7.1 General

When a lamp is to be tested for its ability to withstand the specified maximum voltage across its terminals, the lamp shall first be made inoperative. For the purpose of this test, the simplest way to render most lamps inoperative is to first allow the arc tube to reach normal operating temperature and then shut off the lamp for a few seconds so that the gas in the arc tube will deionize. The power can then be reapplied, and most lamps will not start for approximately 30 seconds at the maximum

Copyright National Electrical Manufacturers Association
Provided by IHS under license with NEMA
No reproduction or networking permitted without license from IHS
Not for Resale

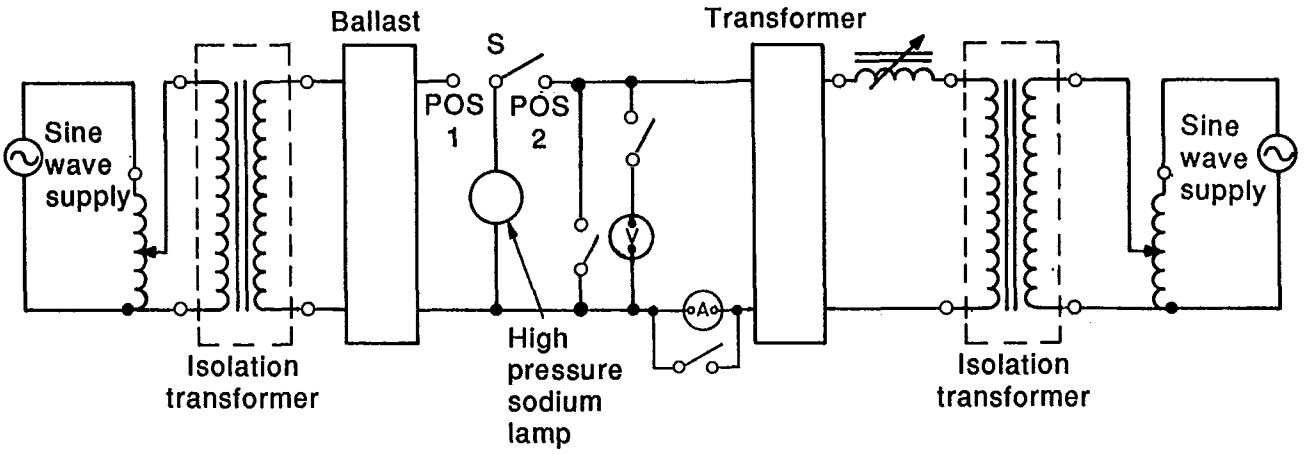

NOTES

1 Potential terminals of instruments are shown as ●.

2 The instrument for setting the voltage should be a peak reading voltmeter or oscilloscope.

WARNING – Refer to 3.5.4 through 3.5.9 for circuit and equipment grounding procedures.

Figure 5 – Circuit for measurement of maximum voltage limitation of a lamp requiring pulse start

voltage specified in the standard. Refer to the appropriate lamp standard in the ANSI C78.1300 Series for the voltage that a lamp is required to withstand.

NOTE – ANSI/UL 496 defines the dielectric strength tests for mogul base lampholders for use with high-pressure sodium lamps. These tests shall be made with a dummy mogul ceramic base in the appropriate lampholder.

These lampholders are classified as follows:

Group A. Those lampholders intended for use with high-pressure sodium lamp fixtures in which the peak voltage of the ballast does not exceed 5000 volts.

Group B. Those lampholders intended for use with high-pressure sodium lamp fixtures in which the peak voltage of the ballast does not exceed 4000 volts.

7.2 Circuit for testing pulse start lamps at maximum peak voltage across lamp terminals

The circuit to be used is shown in figure 5. The ballast for warming up the lamp is a normal commercial ballast. For application of the high voltage, a combination of a step-up transformer and a current-limiting reactor is used. The reactor is usually variable and is placed in the primary circuit.

7.3 Procedure for testing pulse start lamp

a) With switch S in the open position and S1 closed (see figure 5), set the peak voltage to the proper values indicated by the voltmeter.

b) Open switch S1 and close the shorting switch. Adjust the current-limiting reactor to provide secondary short-circuit current approximately equal to the rated lamp current. Open the shorting switch and readjust the peak voltage, if necessary.

c) Place the lamp to be tested in the socket.

d) Close switch S in position 1, and allow the lamp to warm up (usually about 10 minutes).

e) When the lamp is warmed up, open switch S; after 5 seconds, close switch S in position 2, leaving it closed for approximately 5 seconds.

f) If an arc occurs at any place in the lamp, the lamp will have failed the test.

7.4 Circuit for testing lamps *not* requiring pulse start

The circuits to be used are shown in figure 6. Circuit I is used to supply the specified rms test

Copyright National Electrical Manufacturers Association
Provided by IHS under license with NEMA
No reproduction or networking permitted without license from IHS
Not for Resale

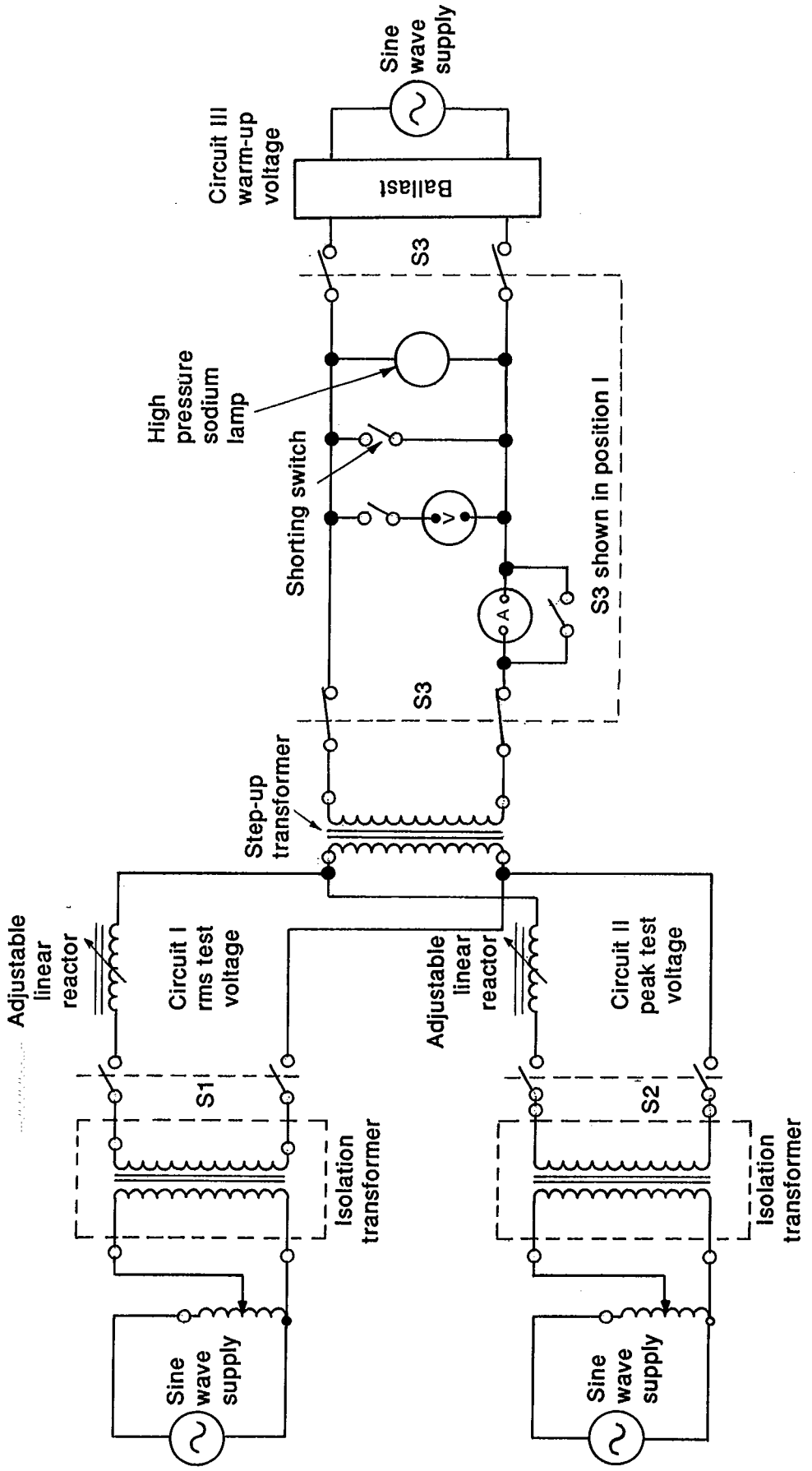

NOTES

1 Current terminals of instruments are shown as ○. Potential terminals of instruments are shown as ●.

2 For setting circuit I, the voltmeter should be an rms meter. For circuit II, instrument should be a peak reading voltmeter or oscilloscope.

WARNING – Refer to 3.5.4 through 3.5.9 for circuit and equipment grounding procedures.

CAUTION – Neither switch S1 nor S2 should be closed when switch S3 is in position 2.

Figure 6 – Circuit for measurement of maximum voltage limitation of a lamp *not* requiring pulse start

Copyright National Electrical Manufacturers Association
Provided by IHS under license with NEMA
No reproduction or networking permitted without license from IHS

Not for Resale

voltage. Circuit II supplies the specified peak voltage. Circuit III utilizes a commercial ballast to warm up the lamp. The principles of circuit and equipment grounding, as outlined in 3.5.4. through 3.5.9, shall be followed in setting up these circuits.

7.5 Procedure for testing lamps *not* requiring pulse start

NOTE – Pending the issuance of appropriate standards, consult the lamp manufacturer for maximum peak and rms test voltages.

While referring to figure 6, perform the following procedure:

a) With switch S2 open and S3 in position 1 (warm-up circuit inoperative), close switch S1. Set the rms voltage to the value specified in the appropriate lamp standard in the ANSI C78.1300 Series, as indicated by the voltmeter. Close the shorting switch; adjust the linear reactor (circuit I) for the rated lamp current. Open the shorting switch and readjust the rms voltage if necessary. Open switch S1.

b) With switch S1 open and switch S3 in position 1, close switch S2 and set the peak voltage to the value specification in the appropriate lamp standard as indicated by the voltmeter or oscilloscope. Close the shorting switch; adjust the linear reactor (circuit II) to provide a short-circuit current of 1 ampere or less, whichever is high enough for visual detection of an arc in the lamp. Open the shorting switch and readjust the peak voltage, if necessary. Open switch S2.

c) Insert the test lamp into socket. Switch S3 to position 2 and allow the lamp to warm up (usually for about 10 minutes).

d) When the lamp has warmed up, switch S3 to position 1; after 5 seconds, close switch S2. Leave it closed for one second and then reopen it.

e) Immediately close switch S1, leave it closed until the lamp restarts and then reopen it. If an arc occurs at any place in the lamp while the test voltages are being applied in steps (d) and (e), the lamp will have failed the test.

8 Measurement of maximum bulb and base temperature

8.1 General

This measurement procedure is intended to be used to verify that under actual operating conditions the maximum permissible bulb and base temperatures are in accordance with the appropriate lamp standard in the ANSI C78.1300 Series.

8.2 Procedure

8.2.1 Thermocouple method for bulb temperature

a) Thermocouple wire shall be size 30 AWG and shall conform to the requirements for "special" thermocouples as listed in the Table of Limits of Errors of Thermocouples in ANSI MC96.1. Thermocouples and methods of attachment shall be arranged to absorb a minimum of radiant energy. The effects of radiant energy on the thermocouple can be minimized by taking readings after the lamp has been extinguished and extrapolating back to time zero.

b) The contact pressure of the thermocouple junction against the glass shall be sufficient to ensure that no further pressure affects the temperature.

c) If the potentiometer does not have room-temperature compensation adjustments, an ice-water bath shall be used for the reference junction.

d) Since temperature equilibrium may require considerable time, readings shall be taken at 15-minute intervals until at least three consecutive readings are the same or within 1%.

e) It may be necessary to measure a number of points on the bulb in order to locate the maximum temperature.

8.2.2 Thermocouple method for base temperature

a) Since base temperatures are normally measured with the lamp in a luminaire in order to evaluate the effect of the luminaire on the base temperature, it is obvious that a direct temperature reading is necessary. In such cases, the thermocouple shall then be

Copyright National Electrical Manufacturers Association
Provided by IHS under license with NEMA
No reproduction or networking permitted without license from IHS
Not for Resale

attached directly to the base shell itself, as close as possible to the junction of the base shell and the glass bulb.

b) For base temperature measurements outside a luminaire, refer to ANSI C78.25.

c) Items (a), (c), and (d) of 8.2.1 also apply to base temperature measurements.

8.2.3 Infrared-radiation method for bulb temperature

a) The instrument used shall be sensitive only to radiation over a wavelength that (1) is not transmitted by glass, so as to avoid contribution from hot components within the lamp bulb, especially the arc tube, and (2) is not absorbed by atmospheric components. For practical purposes, that is limited to the wavelength range 4.8 micrometers to 5.6 micrometers.

b) 8.2.1 (d) and 8.2.1.(e) are applicable to this method of measurement.

c) Commercial instruments may differ; the procedures outlined in the manufacturer's operating manual should be followed.

9 Measurement of luminaire effect on lamp voltage rise

9.1 General

A requirement for lamp voltage rise limits for stabilized operation in a luminaire is given in the appropriate lamp standard in the ANSI C78.1300 Series. This voltage rise is the difference between operation in the luminaire and operation of the bare lamp in still air. In the case of a tubular double-ended lamp, the rise is the difference between operation in the luminaire and operation in the designated glass envelope.

9.2 Test conditions

a) The measurements shall be made on reference lamps.

b) The designed limits of the operating position for the lamp shall agree with the operating position defined by the luminaire.

c) The lamp shall operate in the same position in still air as in the luminaire.

d) The lamp shall operate from the reference ballast specified for this type of lamp at the rated reference ballast input voltage.

9.3 Procedure

a) The bare lamp shall be operated in still air at an ambient temperature of 25°C±5°C. The presence of high-reflecting surfaces and sources of radiation should be avoided.

b) When the bare lamp reaches a stable operating condition (see 3.7), the lamp voltage shall be recorded.

c) The lamp shall be permitted to cool to essentially ambient temperature for a minimum of 1 hour before being transferred to the luminaire, which shall be at 25°C±5°C.

d) The lamp shall operate in the luminaire until stabilized conditions are obtained, at which time the lamp voltage shall again be recorded.

e) The lamp voltage rise is the difference between the voltage for the lamp operating in the luminaire and the voltage for the bare lamp operating in still air.

Annex A
(informative)

Bibliography

ANSI C82.9-1988, *High-intensity-discharge and low-pressure sodium lamps, ballasts, and transformers – Definitions*

Copyright National Electrical Manufacturers Association
Provided by IHS under license with NEMA
No reproduction or networking permitted without license from IHS
Not for Resale