NEMA C78.387 95 ■ 6470247 0509853 638 ■

American National Standard

ANSI C78.387-1995

for electric lamps:

Metal-Halide Lamps— Method of Measuring Characteristics

National Electrical Manufacturers Association

1300 North 17th Street
Suite 1847
Rosslyn, Virginia 22209
(703) 841-3200

American National Standard

Copyright National Electrical Manufacturers Association
Provided by IHS under license with NEMA
No reproduction or networking permitted without license from IHS

Not for Resale

NEMA C78.387 95 ■ 6470247 0509854 574 ■

ANSI C78.387-1995
Revision of ANSI C78.387-1987

AMERICAN NATIONAL STANDARD
for electric lamps—

Metal-Halide Lamps—Method of Measuring Characteristics

Secretariat
National Electrical Manufacturers Association

Approved April 18, 1995
American National Standards Institute

Copyright National Electrical Manufacturers Association
Provided by IHS under license with NEMA
No reproduction or networking permitted without license from IHS
Not for Resale

American National Standard

Approval of an American National Standard requires verification by ANSI that the requirements for due process, consensus, and other criteria for approval have been met by the standards developer.

Consensus is established when, in the judgment of the ANSI Board of Standards Review, substantial agreement has been reached by directly and materially affected interests. Substantial agreement means much more than a simple majority, but not necessarily unanimity. Consensus requires that all views and objections be considered, and that a concerted effort be made toward their resolution.

The use of American National Standards is completely voluntary; their existence does not in any respect preclude anyone, whether he has approved the standards or not, from manufacturing, marketing, purchasing, or using products, processes, or procedures not conforming to the standards.

The American National Standards Institute does not develop standards and will in no circumstances give an interpretation of any American National Standard. Moreover, no person shall have the right or authority to issue an interpretation of an American National Standard in the name of the American National Standards Institute. Requests for interpretations should be addressed to the secretariat or sponsor whose name appears on the title page of this standard.

CAUTION NOTICE: This American National Standard may be revised or withdrawn at any time. The procedures of the American National Standards Institute require that action be taken periodically to reaffirm, revise, or withdraw this standard. Purchasers of American National Standards may receive current information on all standards by calling or writing the American National Standards Institute.

Published by

National Electrical Manufacturers Association
1300 N. 17th Street, Suite 1847, Rosslyn, Virginia 22209

Copyright © 1996 National Electrical Manufacturers Association
All rights reserved

No part of this publication may be reproduced in any form, in an electronic retrieval system or otherwise, without prior written permission of the publisher.

Printed in the United States of America

Copyright National Electrical Manufacturers Association
Provided by IHS under license with NEMA
No reproduction or networking permitted without license from IHS

Not for Resale

TABLE OF CONTENTS

SECTION		Page
	Foreword	i
1	Scope and purpose	1
2	Normative references	1
3	Measurement of lamp voltage, current, and power	2
4	Measurement of lamp current crest factor	7
5	Measurement of starting voltage	9
6	Measurement of warm-up time	13
7	Testing lamps at maximum permissible voltage across lamp terminals	14
8	Measurement of maximum bulb and base temperature	15
9	Measurement of lamp reignition-spike voltage	16

Figures

Figure 1	Reference ballast circuit for metal-halide lamps	18
Figure 2	Circuit for measurement of lamp current crest factor	18
Figure 3	Circuit for measurement of lamp reignition voltage, warm-up time, and starting voltage for lamps not requiring pulse start	19
Figure 4	Circuit for measurement of starting voltage for a lamp requiring pulse start	19
Figure 5	Circuit for measurement of maximum voltage limitations of a lamp not requiring pulse start	20
Figure 6	Circuit for measurement of maximum voltage limitations of a lamp requiring pulse start	21
Figure 7	Typical lamp reignition-spike voltage of a metal-halide lamp	21

Copyright National Electrical Manufacturers Association
Provided by IHS under license with NEMA
No reproduction or networking permitted without license from IHS
Not for Resale

FOREWORD (This Foreword is not part of American National Standard C78.387-1995)

This edition of the *American National Standard for Electric Lamps—Metal-Halide Lamps—Methods of Measuring Characteristics* supersedes the 1987 edition. It describes the procedures to be followed and the precautions to be observed in measuring the characteristics of metal-halide lamps.

Suggestions for improvement of this standard will be welcome. They should be sent to the Secretariat, C78 Committee, National Electrical Manufacturers Association, 1300 North 17th Street, Suite 1847, Rosslyn, VA 22209. This standard was processed and approved for submittal to ANSI by Accredited Standards Committee on Electric Lamps, C78 Committee and the combined committees of C78-4, High-Intensity Discharge Lamps and C82-2 High-Intensity Discharge Lamp Ballasts. Approval of the standard does not necessarily imply that all committee members voted for its approval. At the time of publications the committees consisted of the following members:

Al Rousseau, Chair C78
Randolph N. Roy, Secretariat
Jeanne L. Spicer, Coordinating Editor

Organization Represented	*Name of Representative*
Advance Transformer Company	Norman Grimshaw
Duro-Test	Herbert Strauss
Entergy (EEI Delegate)	William A. Maguire
ETL INCHCAPE Testing Laboratories	Craig Davenport
GE Lighting	John Krissinger
Illuminating Engineering Society	Rita Harrold
National Electrical Manufacturing Assn. (Del)	Richard Snow
OSRAM SYLVANIA INC.	Peter A. Bleasby
Philips Lighting Company	Al Rousseau
Underwriters Laboratories	David Belt

Michael Tanner, Chair C78-4
Mike Minarczyk, Chair C82-2

Advance Transformer Company	Norman Grimshaw
	Glenn Garbowicz
American Electric	Greg Steinman
	Alex Pope
City of Los Angeles	Michael Cates
Crouse-Hinds/Cooper Lighting	Tom Burnet
	Richard Snow
Deltona Lighting Products	Don Briner
Duro-Test	Larry Sheinberg
Entergy (EEI Delegate)	William A. Maguire
ETL INCHCAPE Testing Laboratories	Michael Neary
GE Lighting	Michael M. Minarczyk
	David Korow
	John P. Krissinger
GE Lighting Systems	Byron Collins
	Michael Owens
Holophane Company	M.L. Tanner
	William Hitchcock
Hubbell Lighting Inc.	Isaac L. Flory, IV
Indy Lighting, Inc.	Ted Yahraus
Lithonia/Hi-Tek Lighting	Fred Carpenter

Copyright National Electrical Manufacturers Association
Provided by IHS under license with NEMA
No reproduction or networking permitted without license from IHS
Not for Resale

MagneTek	Bob Boydston
	Bill Brosius
Manufacturera de Reactores, S.A.	Ernesto Mendoza Estrada
OSRAM SYLVANIA INC	Richard Parrott
	Warren Anderson
Philips Lighting Company	Sam Carleton
	Bill Simpson
Underwriters Laboratories, Inc.	John Marshall
	David Belt
Venture Lighting International	Tom Harding
	Juris Sulcs

Copyright National Electrical Manufacturers Association
Provided by IHS under license with NEMA
No reproduction or networking permitted without license from IHS
Not for Resale

Copyright National Electrical Manufacturers Association
Provided by IHS under license with NEMA
No reproduction or networking permitted without license from IHS
Not for Resale

METAL-HALIDE LAMPS— METHODS OF MEASURING CHARACTERISTICS

1 Scope and purpose

1.1 This standard describes the procedures to be followed and the precautions to be observed in measuring the characteristics of metal-halide lamps as specified in the *American National Standard Specifications for Metal-Halide Lamps* (see clause 2).

1.2 It is the purpose of this standard to outline methods of measurement that will make it possible to obtain reproducible and accurate measurements of the characteristics of the metal-halide lamps.

1.3 Deviations from the procedures given in this standard are permissible for production or other testing, provided that the methods used give results in substantial agreement with the methods given in this standard. In case of doubt, reference shall be made to the methods specified in the appropriate American National Standard referenced in clause 2, Normative references, to establish the validity of the results obtained by any alternate procedure. Terms used in this standard shall be defined in accordance with *American National Standard Definitions for High-Intensity-Discharge Lamp Ballasts and Transformers*, ANSI C82.9.

2 Normative references[1]

The following standards contain provisions which, through reference in this text, constitute provisions of this American National Standard. At the time of publication, the editions indicated were valid. All standards are subject to revision, and parties to agreements based on this American National Standard are encouraged to investigate the possibility of applying the most recent editions of the standards indicated below.

ANSI C78.25-1991 (R1996), *Electric Lamps—Method of Measuring Lamp—Base Temperature Rise*

ANSI C78.1375-1990, *Electric Lamps—400-Watt M59 Metal-Halide Lamp*

ANSI C78.1376-1990, *Electric Lamps—1000-Watt M47 Metal-Halide Lamp*

ANSI C78.1377-1990, *Electric Lamps—175-Watt M57 Metal-Halide Lamp*

ANSI C78.1378-1990, *Electric Lamps—250-Watt M58 Metal-Halide Lamp*

ANSI C78.1379-1990, *Electric Lamps—1500-Watt M48 Metal-Halide Lamp*

ANSI C78.1381-1989, *Electric Lamps—70-Watt M85 Metal-Halide Lamp*

ANSI C82.5-1990 (R1995), *Reference Ballasts for High-Intensity-Discharge Lamps*

ANSI C82.9-1996, Definitions for High-Intensity-Discharge Lamps Ballast and Transformers

ANSI MC96.1-1982, *Temperature Measurement Thermocouples*

[1] In the absence of an appropriate lamp standard, consult with particular lamp manufacturer offering the lamp in question.

Copyright National Electrical Manufacturers Association
Provided by IHS under license with NEMA
No reproduction or networking permitted without license from IHS
Not for Resale

3 Measurement of lamp voltage, current, and power

3.1 General

This section covers the measurement of lamp current, voltage, and power for metal-halide lamps as measured on a reference ballast having a sinusoidal voltage input. In order to start the lamp on a reference ballast, a voltage higher than the specified voltage may be required. An external starting aid is preferred (for example, a tesla coil).

3.1.1 Double-ended lamps

Due to their temperature behavior double-ended metal-halide lamps must be operated in luminaires exclusively. Therefore, for measurement purposes, lamps must be operated within a luminaire simulators specified by the lamp manufacturer (a standardized luminaire simulator is under consideration).

3.1.2 Ultra-violet radiation warning

Some metal-halide lamps require protection against UV radiation. Refer to the appropriate American National Lamp Standards to determine if UV protection is required.

3.2 Power supply

3.2.1 Waveshape

The ac power supply shall have a voltage waveshape such that the rms (root-mean-square) summation of the harmonic components shall not exceed 3% of the fundamental.

3.2.2 Voltage regulation

The line voltage should be as steady and free from changes as possible. For best results, the voltage shall be regulated to within ± 0.1%. If adequate automatic regulation is not available, constant checking and readjustments are essential if accurate measurements of lamp characteristics are to be obtained.

3.2.3 Power source impedance

The power supply impedance, as measured at the point where the reference ballast and lamp combination is connected, shall not exceed 2% of the reference ballast impedance.

3.3 Ambient conditions

The ambient temperature in which the lamp is operated shall be maintained at 25°C ± 5°C, and the area shall be draft-free. If a lamp is operated within an enclosure, the air temperature within the enclosure shall also be at 25°C ± 5°C, and the area shall be draft-free.

3.4 Ballasts

3.4.1 When the electrical characteristics of a metal-halide lamp are being measured, the lamp shall be operated in conjunction with a reference ballast of the appropriate rating. The use of a ballast having different characteristics (even though of the same impedance) can materially alter the electrical characteristics of the lamp. For the proper reference ballasts to be used, refer to the appropriate ANSI C78 lamp standard and to ANSI C82.5 as referenced in clause 2.

3.4.2 If the electrical readings are to be taken on a lamp of a size for which no American National Standard exists, the ballast used shall be one complying with the general requirements for metal-halide lamp reference ballasts and having an impedance appropriate for the lamp.

Copyright National Electrical Manufacturers Association
Provided by IHS under license with NEMA
No reproduction or networking permitted without license from IHS
Not for Resale

3.4.3 For special purposes, it may be desirable to determine the electrical characteristics of lamps when they are operated by other than reference ballasts. Where this is done, results are meaningful only for the particular ballast and circuit with which they were obtained.

3.4.4 When the electrical characteristics of a lamp are to be obtained at nominal lamp wattage, the lamp shall be operated with a reference ballast of appropriate rating. The nominal wattage level is achieved by adjustment of the input voltage to the ballast or the impedance of the reference ballast. The input voltage shall not, however, be permitted to fall below the minimum voltage specified for stable operation of the lamp.

3.5 Circuits and equipment grounding

3.5.1 An acceptable operating circuit for a metal-halide lamp is shown in figure 1. The reference ballasts used for lamp measurement are the series reactor type and do not include step-up transformers. In many cases, a separate transformer may be needed to provide the line voltage required by the reference ballast.

3.5.2 The method of connecting the instruments in the circuit is shown in figure 1. In this method the voltmeter that measures lamp voltage and the potential element of the wattmeter are connected on the lamp side of the current-measuring instruments. Switches shall be provided so that each instrument element can be removed from the circuit when the instrument is not being read. These switches shall have a maximum resistance of 0.01 ohm and should be well maintained to preserve this property.

3.5.3 Reference ballasts may be set up either with or without the impedance of the ammeter and wattmeter current coils or shunts included in the measured ballast characteristics. Either procedure is satisfactory, but it is important that instrument corrections be determined for the particular method being used (see 3.9). If the impedances of the ammeter and wattmeter current coils are included in the ballast impedance, these instrument coils shall be left in the circuit at all times.

3.5.4 In order to minimize the possibility of shock hazard, it is essential that careful attention be paid to the proper grounding of the electrical circuit and of certain instruments that may be used. It is especially important to ensure that electronic or other instruments having exposed metal cases always have the exposed metal parts connected to ground.

3.5.5 In the circuit given in figure 1, the power supply is shown as a two wire system connected to the test circuit through an isolation transformer. The power supply used may or may not have one of the phase conductors at ground potential; either type of supply can be used satisfactorily since the isolation transformer separates the measurement circuit from the power source. The instrument side of the measurement circuit may be grounded or, if all instrument terminals are adequately insulated, it may be left "floating" (that is, with neither side connected to ground).

3.5.6 Oscilloscopes and peak reading voltmeters, as shown in figures 2, 3, and 4 usually must have one of the input terminals at ground potential. The use of the isolation transformer described in 3.5.5 allows one to connect any part of the test circuit to ground.

Note—To minimize shock hazard, it is essential that the exposed metal case of the oscilloscope or any other instrument is always connected to ground.

3.5.7 To eliminate the possibility of ground loops, it is essential that a single ground connection be used to ground the exposed metal case of the instrument.

3.5.8 Whenever the circuit permits, the lampholder shell shall be connected to the grounded side of the measurement circuit.

Copyright National Electrical Manufacturers Association
Provided by IHS under license with NEMA
No reproduction or networking permitted without license from IHS
Not for Resale

3.6 Lamp position

3.6.1 Generally impedance values for reference ballasts have been standardized only for vertical and horizontal operation. For measurement purposes, the lamp shall be operated in either the vertical or horizontal position. If a lamp is marked or the lamp standard designates a specific operating position, the lamp shall be tested in that position.

3.6.2 If the lamp is operated in the horizontal position, the value for the horizontal reading for the lamp shall be obtained by operating the lamp with the arc tube in the tip-up position. In this position the amount of metal-halide salts condensed on the lower wall of the arc tube will be minimized. If the arc tube is not kept level, or if it is disturbed abruptly, the sudden introduction of more halide salt into the arc stream may affect the measurement. It is usually found that some other rotational position will result in slight deviations from measurements obtained in the tip-up position.

WARNING—Refer to 3.5.4 through 3.5.8 for circuit and equipment grounding procedures.

3.7 Lamp stabilization

3.7.1 General

The stabilization requirements of 3.7.2 are applicable to any lamp regardless of its accumulated burning time. The requirements are general but should be adhered to unless other instructions are given by the lamp manufacturer. The stabilization requirements do not eliminate the 100 hour lamp aging requirement for reference measurements.

3.7.2 Stabilization requirements

1. Before any measurements are made on a metal-halide lamp, the lamp shall be stabilized by operating it for a minimum of 6 hours at a wattage within ± 10% of its rated wattage. The lamp shall be operated in the same burning position in which the measurements will be made. The 6 hour operation may be either on the actual measurement ballast or on a separate warm-up ballast.

2. If a stabilized lamp is turned off and then restarted at a later time without a change in orientation, an additional 30 minute burning period is all that is required for restabilization. However, if the lamp is reoriented (for example, from vertical to horizontal or if the lamp is rotated axially in the horizontal position), the full 6 hour period for restabilization shall be required.

3. If a stabilized lamp is burning on one ballast and is then transferred without being extinguished to a reference ballast for measurement, an additional period of burning in the measurement circuit is usually necessary to bring the lamp to equilibrium. This additional burning period can be kept to a minimum if the ballast used for restabilization operates the lamp at essentially the same wattage as the reference ballast.

If for any reason a lamp must be physically relocated, but without changing its orientation, the lamp shall first be allowed to cool so that all parts of the bulb will be a temperature not in excess of 60°C (140°F). If there has been no movement of the lamp prior to the cooling period and if the same orientation of the lamp is maintained in the new location, only an additional 30 minutes of burning for restabilization shall be required.

Note—The necessity for the long stabilization period arises because the halide material in these lamps is not fully vaporized during lamp operation. The vapor pressure (and consequently the electrical and photometric characteristics) of the lamps varies with the cold spot temperature. The temperature and position of the cold spot change with different burning positions, requiring considerable time to vaporize the excess halide from a previous cold spot position and recondense it in a new position.

Copyright National Electrical Manufacturers Association
Provided by IHS under license with NEMA
No reproduction or networking permitted without license from IHS
Not for Resale

3.8 Instruments

3.8.1 Accuracy

Except for oscilloscopes, instruments shall be selected that have an accuracy better than 0.75% over a minimum frequency range of 40 to 1000 Hz. Scale calibration is essential to obtain accurate results.

3.8.2 Impedance limitations

3.8.2.1 High potential circuit impedance and low current-circuit impedance are desirable in order to reduce the disturbance to the circuit caused by the presence of the instruments.

3.8.2.2 Instruments connected in parallel with the lamp shall not draw more than 3% of the rated lamp current. If corrections for the presence of the instrument in the circuit (see 3.9) are to be avoided, this current drain shall be limited to a maximum of 1.5% of the rated lamp current.

3.8.2.3 Instruments connected in series with the lamp shall have an impedance such that the voltage drop does not exceed 2% of rated lamp voltage (unless their impedance has been included as part of the reference ballast impedance). If corrections for the presence of the instrument in the circuit (see 3.9) are to be avoided, this voltage drop shall be limited to a maximum of 0.75% of the rated lamp voltage. In those cases where the impedance of the instrument is included as part of the reference ballast impedance, these restrictions do not apply and no correction need be made to compensate for the presence of the instrument in the circuit.

3.8.3 Root-mean-square measurements

The voltage across a metal-halide lamp has a distorted waveshape that departs considerably from a true sine wave. Therefore, the instruments used in the lamp circuits shall be of a type whose deflections or readings depend upon the rms value of the wave. Instruments whose scales are calibrated in rms values, but whose deflections or readings depend upon average or peak values, shall not be used.

3.8.4 Peak measurements

The reignition spike voltage (see clause 9) of a metal-halide lamp can be considered a voltage pulse because of its sudden rise and fall (20 microseconds rise time). Oscilloscopes used for this measurement should possess a minimum bandwidth of 1 megahertz (MHz). A peak reading voltmeter may be used in conjunction with the oscilloscope.

3.9 Corrections to compensate for the presence of instruments in the lamp circuit

3.9.1 General

If the electrical measuring instruments used in a metal-halide lamp circuit have impedances within the limits specified in 3.8 (that is, for potential coils, a current drain not exceeding 1.5% of rated lamp current, and, for current coils, a voltage drop not exceeding 0.75% of rated lamp volts), it shall not be necessary to make any corrections to compensate for the presence of the instrument in the circuit.

If the instrument impedances do not meet the restrictions in 3.8, corrections may be needed and the magnitude of these corrections can usually be determined by the restoration-of-light method. The accuracy of this method is somewhat dependent upon the stability of the light output of the particular lamp being measured, but the method will normally be useful wherever the correction to be determined exceeds approximately 1% of the electrical value being measured. The restoration-of-light method can be used for measurements on reference ballasts or on any ballast on which lamp characteristics will vary significantly with changes in line voltage.

Copyright National Electrical Manufacturers Association
Provided by IHS under license with NEMA
No reproduction or networking permitted without license from IHS
Not for Resale

3.9.2 Restoration-of-light method

The restoration-of-light method is one in which a suitable photoelectric cell and meter are used to measure the relative light output of the lamp. The photoelectric cell should be one that has been selected and calibrated to determine that its spectral response linearity and fatigue characteristics meet the requirements of the test. The test should be made with the lamp in an integrating sphere or enclosure. The procedure is as follows:

1. Set the proper rated line voltage across the lamp and reference ballast.

2. Note the relative light output of the lamp as indicated by the photoelectric cell reading.

3. Insert the instrument (ammeter, voltmeter, or wattmeter) and, with line voltage held constant, observe and record the instrument indication.

4. Readjust the line voltage until the output of the photoelectric cell is stabilized at the same reading as before the instrument was inserted.

5. Record the reading of the instrument under this new condition; within very close limits, this value will be the same as would have been obtained at rated line voltage if the instrument did not alter the lamp circuit.

6. Remove the instrument from the circuit and recheck (1) and (2) above. The photoelectric cell output indication should agree with that originally obtained.

7. The difference between the instrument indication recorded in (5) and that recorded in (3) may be used as an instrument correction to be added to (or subtracted from) observations made when holding rated line voltage. This correction, of course, applies only for that particular instrument when used with that size lamp.

It should be noted that the reading for only one instrument at a time can be obtained by the foregoing procedure. Also, instrument scale corrections shall still be applied. For a wattmeter, the power taken by its potential circuit (E^2/R) shall be subtracted from the correction that has been determined. (This assumes that the wattmeter coils have been connected as shown in figure 1.)

The exact procedure to be followed also depends upon whether the instrument current coils are or are not included in the reference ballast impedance. The procedure is somewhat different for each of the three instruments in the lamp circuit as outlined in 3.9.3 through 3.9.5.

3.9.3 Correction for lamp ammeter reading

3.9.3.1 If the impedances of the current coils have been included in the measured impedance of the reference ballast, no correction is needed for the presence of this instrument (that is, the restoration-of-light method should not be used). The ammeter shall be left in the circuit at all times.

3.9.3.2 If the impedances of the current coils have not been included in the reference ballast impedance, and if the voltage drop across the ammeter exceeds 0.75% of rated lamp voltage, the ammeter correction should be obtained by the restoration-of-light method. The ammeter should not be left in the circuit while the readings of other instruments are being taken.

3.9.4 Correction for lamp voltmeter reading

Regardless of which procedure is followed for the current coils, the correction for the voltmeter reading, if one is needed, is obtained by using the restoration-of-light method. The voltmeter should not be left in the circuit while readings of other instruments are being taken.

Copyright National Electrical Manufacturers Association
Provided by IHS under license with NEMA
No reproduction or networking permitted without license from IHS
Not for Resale

3.9.5 Correction for lamp wattmeter reading

3.9.5.1 If the current coils have been included in the measured reference ballast impedance, the wattmeter current coil shall be left in the circuit at all times, and no correction need be made for the presence of this coil. The correction for the presence of the potential coil (if a correction is needed) may be obtained by using the restoration-of-light method and then subtracting the power (E^2/R) in the potential circuit. (This assumes the wattmeter connections are as shown in figure 1.)

3.9.5.2 If the current coils have not been included in the reference-ballast impedance, the correction for both the current and potential coils (if corrections are needed) may be determined at the same time by the restoration-of-light method. The power in the potential coil (E^2/R) shall be subtracted from the correction obtained. (Again, this assumes the wattmeter connections are as shown in figure 1.)

3.9.5.3 It will sometimes be found that the increase in wattage when the light output is restored is very nearly equal to the decrease when E^2/R is subtracted; when this condition prevails, it is then possible in routine work to omit both corrections and to use the wattmeter readings directly. (An instrument scale correction, of course, shall still be made.)

3.9.5.4 In some cases it may be desirable to connect the lamp wattmeter so that its potential coil is on the input side of the current coil (instead of on the output side as is shown in figure 1). If this is done, then the procedures recommended in 3.9.5.1 and 3.9.5.2 should be modified by subtracting the loss in the current coil (I^2R) instead of the loss in the potential coil.

4 Measurement of lamp current crest factor

4.1 General

Limits of current crest factor are found in the appropriate ANSI lamp standard referenced in clause 2.

4.1.1 Methods of measurement

The following methods can be used to measure current crest factor:

1. Method A—Peak reading voltmeter and root-mean-square ammeter.

2. Method B—Oscilloscope and root-mean-square ammeter; or oscilloscope, current probe, and root-mean-square ammeter.

Method A is the more accurate method (see 4.2). Method B is sufficiently accurate and has the advantage of displaying the waveshape (see 4.3).

4.1.2 Circuit

A generalized circuit is shown in figure 2. Other instruments may be needed to ensure that the lamp ballast combination is operating as desired. The principles of circuit and equipment grounding as outlined in 3.5.4 through 3.5.8 shall be followed in setting up this circuit.

The resistance R should be noninductively wound; it must not change resistance during measurement. Its resistance shall be accurately known, and the value shall be such that when it is carrying rated lamp current the voltage across it will not exceed 0.5% of rated lamp voltage. A resistance of 0.100 ohm, rated at 15 amperes, is commonly used.

To obtain true and accurate results, care shall be taken to ensure that effects from stray electromagnetic radiation are kept to a minimum.

Copyright National Electrical Manufacturers Association
Provided by IHS under license with NEMA
No reproduction or networking permitted without license from IHS
Not for Resale

4.2 Method A—peak reading voltmeter and root-mean-square ammeter

1. Place a calibrated, peak reading voltmeter across R, as shown in figure 2.

2. With the lamp operating as desired, read the rms current as indicated by the ammeter and the peak volts across R. The two readings should be taken close together in time.

3. The peak current may be found as follows:

   a. Record the peak volts across R, either directly from the meter reading or (as is usually the case) by dividing the peak-to-peak reading by 2.
   b. Divide the peak volts by R to obtain peak current in amperes.

4. To obtain the crest factor, divide peak amperes by rms amperes.

4.3 Method B—oscilloscope and root-mean-square ammeter; oscilloscope, current probe, and root-mean-square ammeter

4.3.1 Oscilloscope and root-mean-square ammeter

1. Connect an oscilloscope, calibrated in volts per unit vertical deflection, across the resistor R, as shown in figure 2.

2. With the lamp operating as desired, read the rms current as indicated by the ammeter and find the peak volts across R by measuring the height of the wave trace from peak to peak; to find peak height, divide by 2. (If the trace height is measured in centimeters, multiply the peak height by the sensitivity of the oscilloscope in volts per centimeter to determine peak volts.) The two readings should be taken close together in time.

3. To find the peak current in amperes, divide the peak volts by R.

4. To obtain the crest factor, divide peak amperes by rms amperes.

5. The use of an oscilloscope may limit the accuracy of this method to within 5% of the measured value. The accuracy of the method can be improved if the system is calibrated with a sinewave current with approximately the same peak current as the value to be determined.

4.3.2 Oscilloscope, current probe, and root-mean-square ammeter

1. Resistor R is eliminated from the circuit in figure 2.

2. With the lamp operating as desired, read the rms current as indicated by the ammeter. With the current probe connected to the oscilloscope, as defined by the probe instructions, clamp the probe around one of the lamp lead wires. The oscilloscope should be set for DC coupling and be calibrated in amperes per unit of vertical deflection. Find the peak current through the lamp by measuring the height of the wave trace from peak to peak, and divide this value by 2. The two readings should be taken close together in time.

3. To obtain the crest factor, divide peak amperes by rms amperes.

4. The use of an oscilloscope may limit the accuracy of this method to within 5% of the measured value. The accuracy of the method can be improved if the system is calibrated with a sinewave current with approximately the same peak current as the value to be determined.

Copyright National Electrical Manufacturers Association
Provided by IHS under license with NEMA
No reproduction or networking permitted without license from IHS
Not for Resale

4.4 Measurement of lamp current crest factor during lamp warm-up

The methods for making this measurement are the same as those described in 4.1 through 4.3, except that the readings of rms amperes and peak current shall be made within 5 to 15 seconds after the lamp arc has struck.

5 Measurement of starting voltage

5.1 General

In any group of lamps of a given type the starting voltage can vary considerably from one lamp to another. Therefore, if the starting voltage characteristics of a large group of lamps (such as a batch of lamps offered for sale or a manufacturer's whole production of a given type) are to be determined, it is necessary to test a fairly large sample of lamps; this sample shall be so selected as to be representative of the total quantity.

If only a single lamp is to be checked, the procedure is still the same as that outlined in 5.2 through 5.4, but the comments on the "group" requirements are not relevant.

Most starting voltage tests are made using a power source having an essentially sinusoidal voltage waveshape. The individual ANSI lamp standards will, however, establish starting requirements for other voltage waveshapes having higher crest factors than the square-root of 2. Therefore, it may be necessary to check lamp starting on these nonsinusoidal waveshapes.

In the case of metal-halide lamps, open circuit voltage waveshapes having higher crest factors than 2.0 may be encountered.

5.2 Conditioning of lamps for starting test

1. Regardless of whether the metal-halide lamp is new or has been tested previously for starting, it shall be seasoned for 30 minutes at room temperature in the position in which the starting test is to be performed. Seasoning as defined in this section refers to the aging of a lamp by operating it within ± 10% of the wattage obtained when operating it on a reference ballast.

2. Before testing at a given temperature, the lamps shall remain at the test temperature for a minimum of 6 hours, preferably overnight. The test chamber shall be maintained at the given temperature throughout the duration of the test.

5.3 Test equipment and power supply

5.3.1 General

1. The test circuits shall be as shown in figures 3 and 4. The principles of circuit and equipment grounding as outlined in 3.5.4 through 3.5.8 shall be followed in setting up this circuit.

2. A power supply having a sinusoidal voltage waveshape is used unless otherwise specified. In most cases, the normal public utility voltage is a satisfactory source of sinusoidal voltage, provided that 3.2.1, 3.2.2, and 3.2.3 are met.

3. The power supply, up to and including the isolation transformer, shall have a capacity of at least 5 times the normal lamp current rating. In those cases where a nonsinusoidal power supply is intentionally used, a curve relating peak voltage (excluding the pulse) to rms voltage shall be obtained.

Copyright National Electrical Manufacturers Association
Provided by IHS under license with NEMA
No reproduction or networking permitted without license from IHS
Not for Resale

4. An adjustable linear reactor should be adjusted to maintain short circuit current when the test voltage is changed in accordance with the procedures of 5.4.

5. The voltmeter shall meet the requirements of 3.8.

6. The switch start method shall be used on one lamp at a time.

5.3.2 Lamps not requiring pulse start

1. Refer to figure 3 for the test circuit.

2. The test equipment and power supply will be the same as in 5.3, (1) through (6).

5.3.3 Lamps requiring pulse start

1. Refer to figure 4 for the test circuit.

2. The test equipment and power supply will be the same as in 5.3, (1) through (6) plus the addition of the following numbered items.

3. A pulse generator with adjustable pulse height and pulse width shall be used. The generator shall be able to provide the appropriate number of pulses per half cycle (or per cycle if expressed as one pulse per cycle). It is acceptable to use a commercial lamp ignitor and to adjust its output by varying components in the ignitor (consultation with the ignitor manufacturer is suggested). The maximum allowable variation in pulse height due to ringing shall be ± 75 volts. The pulse shall be properly phased in relation to the supply voltage. The lamp base shell shall be connected to the ground side of the circuit (as per 3.5.8) and the pulse applied through the eyelet.

4. An oscilloscope shall be used to display the input voltage trace with the coupled voltage pulse. The oscilloscope system (scope and high voltage probe) shall have a minimum bandwidth of 35 megahertz and the rise time shall be faster than 20 nanoseconds. The step-down ratio and probe compensation should be carefully adjusted prior to use.

5. To prevent damage to the voltmeter, remove the voltmeter from the circuit whenever a starting pulse is applied.

5.4 Procedure for lamp starting test and minimum starting voltage

5.4.1 Procedure A for lamps not requiring pulse start

This procedure is used to determine whether or not a lamp will start under the conditions specified in the appropriate lamp standard as referenced in clause 2, of this publication. Refer to figure 3 for this procedure.

1. With the starting switch open, set the open circuit voltage to the minimum lamp starting voltage specified in the appropriate lamp standard.

2. Close the shorting switch to short out the lamp socket and then close the starting switch. Adjust the variable reactor, if used, to give rated lamp current.

3. Open the lamp starting switch, open the shorting switch, and then reclose the starting switch.

4. Record the lamp as starting if the rms lamp voltage drops to a value less than 50 volts within 2 minutes. If the voltage remains high, or if it does not fall to a steady low value, record the lamp as nonstarting.

Copyright National Electrical Manufacturers Association
Provided by IHS under license with NEMA
No reproduction or networking permitted without license from IHS
Not for Resale

5.4.2 Procedure B for lamps not requiring pulse start

This procedure shall be used to determine the minimum starting voltage of a lamp. Refer to figure 3 for this procedure.

1. With the starting switch open, set the open circuit voltage to a value at which the lamp is expected to start at the test temperature.

2. Close the shorting switch to short out the lamp socket and then close the starting switch. Adjust the reactor to give rated lamp current.

3. Open the lamp starting switch, open the shorting switch, and then reclose the starting switch.

4. Lamp starting is achieved if the rms lamp voltage drops to a voltage less than 50 volts within 2 minutes. If the lamp starts, continue operating the lamp as follows:

Nominal Lamp Voltage	Minimum Operating Time
≤100 Volts	2 minutes
101–259 Volts	5 minutes
≥260 Volts	10 minutes

   At the end of the operating time allow the lamp to cool for at least 6 hours.

5. Reduce the rms open circuit voltage in discreet steps as outlined below until the lamp no longer starts.

Nominal Lamp Voltage	OCV Increment
≤ 100 Volts	5 Volts
101–259 Volts	10 Volts
≥ 260 Volts	20 Volts

6. The minimum starting voltage is determined when a lamp no longer starts at the next lowest level.

5.4.3 Procedure A for lamps requiring pulse start

This procedure is used to determine whether or not a lamp will start under the conditions specified in the appropriate lamp standard as referenced in clause 2, of this publication. Refer to figure 4 for this procedure.

1. Disable the pulse generator. With the starting switch closed, set the open circuit voltage to the minimum rms voltage specified in the appropriate lamp standard. Open the starting switch.

2. Close the shorting switch to short out the lamp socket and then close the starting switch. Adjust the variable reactor to give rated lamp current.

3. Open the starting switch and open the shorting switch.

4. With no lamp in the socket, close the starting switch, enable the pulse generator, and adjust the starting pulse to the specified value set forth in the appropriate lamp standard. In most cases, the oscilloscope will serve as the required dummy lamp load. If not, add a high voltage, high frequency capacitor across the socket. The lamp capacitance is generally on the order of 10 picofarads. This value can be measured or obtained from the lamp manufacturer. The pulses shall be located as close as possible to the latest electrical position specified in the appropriate lamp standard as referenced in clause 2 of this publication.

Copyright National Electrical Manufacturers Association
Provided by IHS under license with NEMA
No reproduction or networking permitted without license from IHS
Not for Resale

5. Open the starting switch and disable the pulse generator.

6. Place the lamp to be tested in the socket. Remove the dummy load capacitor if used.

7. Close the starting switch and enable the pulse generator. Lamp starting is achieved if the rms lamp voltage drops to a value less than 50 volts. If the lamp does not start within 10 seconds at 10°C ambient and within 2 minutes at -30°C ambient, the lamp has failed the test; unless these values are superseded by the individual lamp standard referenced in clause 2.

5.4.4 Procedure B for lamps requiring pulse start

This procedure is used to determine various combinations of minimum rms voltages and peak starting pulse characteristics for starting a lamp. It must be understood that a number of factors affect the ability of the gases within a lamp to ionize. Initially, there must be sufficient open circuit voltage and short circuit current to start the lamp. Both the rms and peak voltage of the open circuit voltage affect starting conditions. A starting pulse has several critical parameters that must be addressed in performing lamp starting tests. The pulse position with respect to the open circuit waveform, the number of pulses, the polarity of the pulses, the peak voltage of each pulse, and the width and energy levels of the pulses all affect the full ionization of the gases in a lamp. All of these factors should be considered in determining the starting characteristics of individual lamps. Depending on the requirements, not all parameters are varied but each parameter should be recorded for the test. In normal practice, only one parameter is varied at a time. The following is a basic strategy and procedure in performing this test (refer to figure 4):

1. Determine which parameter is to be evaluated.

2. Set all other parameters to a value sufficient to ensure lamp starting at the test temperature.

3. Decrease the test parameter in discrete increments.

4. After completing the first parameter, move to the next parameter, setting the previous tested parameter to the minimum level as determined from the test result.

5. Continue this procedure until the parameters in question have been determined.

6. In performing these tests, follow the basic procedures of 5.4.3, (1) through (7).

7. Lamp starting is achieved if the rms lamp voltage drops to a value less than 50 volts within 10 seconds at 10°C ambient and within 2 minutes at -30°C ambient; unless these values are superseded by the individual lamp standard referenced in clause 2. If the lamp starts, continue operating the lamp as follows:

Nominal Lamp Voltage	Minimum Operating Time
≤100 Volts	2 minutes
101–259 Volts	5 minutes
≥260 Volts	10 minutes

At the end of the operating time allow the lamp to cool for at least 6 hours.

Copyright National Electrical Manufacturers Association
Provided by IHS under license with NEMA
No reproduction or networking permitted without license from IHS
Not for Resale

8. Reduce the parameters under test following these recommended levels

   a. Open Circuit Voltage (OCV):

Nominal Lamp Voltage	OCV Increment
≤100 Volts	5 Volts
101–259 Volts	10 Volts
≥ 260 Volts	20 Volts

   b. Pulse height: Reduce the pulse height in 100 volt increments.

   c. Reduce other parameters using similar methodology.

9. The minimum starting parameter is determined when a lamp no longer starts at the next lowest level.

6 Measurement of warm-up time

6.1 General

The method described in this section is intended as an evaluation of the lamp itself and is independent of the effects of commercial luminaires and ballasts. See figure 3 for the recommended test circuit. The test equipment and power supply requirements referred to in 5.3 shall apply. The established requirements for lamp warm-up time are stated in the appropriate ANSI lamp standard referenced in clause 2.

6.2 Test conditions

1. The lamp shall be tested in the operating position most adverse to warm-up for the particular lamp design being tested (but not, of course, in a position in which the lamp was not intended to operate).

2. The lamp shall be tested in still air.

3. If the lamp is tested in an enclosure, the enclosure shall be one that is approximately cubical in shape with a volume of not less than 1 cubic foot for each 12 watts of lamp power.

4. The power supply circuit shall be capable of maintaining the current at the specified value throughout the warm-up period.

6.3 Selection and handling of lamps

1. Regardless of whether the metal-halide lamp has been previously stabilized, it shall be restabilized for 30 minutes at room temperature in accordance with the requirements in 3.7.2.

2. Before testing, the lamp shall remain at the test temperature for a minimum of 6 hours, preferably overnight.

6.4 Procedure

1. The lamp shall be operated at a constant current equal to the minimum starting current for that lamp type as specified in the appropriate ANSI lamp standard referenced in clause 2. Constant current shall be maintained by varying the line voltage.

2. Warm-up time shall be measured from the moment the arc strikes to the moment the lamp voltage reaches 95% of the minimum specified lamp operating voltage for the lamp position used in the test.

Copyright National Electrical Manufacturers Association
Provided by IHS under license with NEMA
No reproduction or networking permitted without license from IHS
Not for Resale

7 Testing lamps at maximum permissible voltage across lamp terminals

7.1 General

If a lamp is to be tested for its ability to withstand the specific maximum voltage across its terminals, the lamp shall first be made inoperative. For the purpose of this test, the simplest way to render the lamp inoperative is to first allow the arc tube to reach normal operating temperature and then shut off the power to the lamp for a few seconds so that the gases in the arc tube will deionize. The power can then be reapplied, and most lamps will not restart for a minute or two even at 2000 volts (although glow may be established between starting electrode and the adjacent main electrode). The voltages (rms and peak) that a lamp is required to withstand are specified in the ANSI lamp standards referenced in clause 2. These standards also give the length of time during which the test voltage is to be applied.

7.2 Circuit for measurement

7.2.1 Circuit for testing lamps not requiring pulse start

The circuits to be used are shown in figure 5. Circuit I is used to warm up the lamp and to supply the specified rms test voltage. Circuit II supplies the specified peak voltage. The 1:10 transformer is shared by both circuits. The KVA rating of this transformer shall be determined from the warm-up requirements of the largest metal-halide lamp to be tested. The principles of circuit and equipment grounding as outlined in 3.5.4 through 3.5.8 shall be followed in setting up these circuits.

7.2.2 Circuit for testing pulse start lamps at maximum peak voltage across lamp terminals

The circuit to be used is shown in figure 6. A normal commercial ballast is typically used for warming up the lamp. For application of the high voltage, a combination of step-up transformer and a current-limiting reactor is used. The reactor is usually variable and is placed in the primary circuit.

7.3 Procedures

7.3.1 Procedure for testing lamps not requiring pulse start

While referring to figure 5, perform the following procedure:

1. With no lamp in the socket and switch S1 open, close switch S2 and set the peak voltage to the value specified in the appropriate ANSI lamp standard, referenced in clause 2, as indicated by the voltmeter or the oscilloscope. Close the shorting switch. Adjust the current-limiting reactor (Circuit II) to the lesser of 1 ampere or rated lamp current. This is high enough for visual detection of the arc in the lamp. Open switch S2 and then open the shorting switch.

2. Close switch S1. Set the rms voltage to the value specified in the appropriate ANSI standard as indicated by the voltmeter. Close the shorting switch. Adjust the current limiting reactor (Circuit I) to 1.5 times the rated lamp current. Open switch S1, and then open the shorting switch.

3. Insert the test lamp into the socket. Close switch S1 and allow the lamp to warm-up (usually about 10 minutes). During this period the linear reactor may have to be adjusted to properly warm up the lamp.

4. When the lamp has warmed up, open switch S1 and, after 5 seconds, close switch S2. Leave switch S2 closed for 1 second and then reopen it.

5. Immediately close switch S1, leave it closed until the lamp restarts, and then reopen it.

Copyright National Electrical Manufacturers Association
Provided by IHS under license with NEMA
No reproduction or networking permitted without license from IHS
Not for Resale

6. While the test voltages are being applied in steps (4) and (5) there may be a small arc between the starting electrode and the adjacent main electrode; this is normal. If an arc occurs in any other place except across the bimetal switch contacts, the lamp will have failed the test.

7.3.2 Procedure for testing pulse start lamps

1. With switch S in the open position and S1 closed (see figure 6) set the peak voltage to the proper value as indicated by the voltmeter.

2. Open switch S1 and close the shorting switch. Adjust the variable reactor to provide secondary short circuit current approximately equal to the rated lamp current. Open the shorting switch and readjust the peak voltage, if necessary.

3. Place the lamp to be tested in the socket.

4. Close switch S to position 1 and allow the lamp to warm up (usually about 10 minutes).

5. When the lamp has warmed up, open switch S. After 5 seconds, close switch S to position 2, leaving it closed for approximately 5 seconds.

6. If an arc occurs any place within the lamp except across the bimetal switch contacts, the lamp will have failed the test.

8 Measurement of maximum bulb and base temperature

8.1 General

Maximum permissible values of bulb and base temperature shall be in accordance with the appropriate ANSI lamp standard referenced in clause 2.

8.2 Procedures

8.2.1 Thermocouple method for bulb temperature

1. Thermocouple wire shall be size 30 AWG and shall conform to the requirements for "special" thermocouples as listed in the Table of limits of errors of thermocouples in ANSI MC96.1. Thermocouples and methods of attachment shall be arranged to absorb a minimum of energy. The effects of radiant energy on the thermocouple can be minimized by taking readings after the lamp has been extinguished and extrapolating back to time zero.

2. The contact pressure of the thermocouple junction against the glass shall be sufficient to ensure that no further pressure affects the temperature.

3. If the instrument used does not have room temperature compensation adjustments, an ice water bath shall be used for the reference junction.

4. Since temperature equilibrium may require considerable time, readings shall be taken at 15 minute intervals until at least three consecutive readings are the same or within 1°C.

5. It may be necessary to measure a number of points on the bulb in order to locate the maximum temperature.

Copyright National Electrical Manufacturers Association
Provided by IHS under license with NEMA
No reproduction or networking permitted without license from IHS
Not for Resale

8.2.2 Thermocouple method for base temperature

1. For base temperature measurements, see ANSI C78.25.

2. Where base temperatures are being measured with lamps in a luminaire in order to evaluate the effect of the luminaire on the base temperature, it is obvious that a metal sleeve cannot be used. In such cases, the thermocouple shall be attached directly to the base shell itself, as close as possible to the junction of the base shell and the glass bulb.

3. Items (1), (3), and (4) of 8.2.1 shall also apply to base temperature measurements.

8.2.3 Infrared-radiation method for bulb temperature

1. The instrument used shall be sensitive only to radiation over a wavelength range that (a) is not transmitted by glass, so as to avoid contribution from hot components within the lamp bulb, especially the arc tube and (b) is not absorbed by atmospheric components. For practical purposes, this is limited to the wavelength range of 4.8 to 5.6 micrometers for bulb thicknesses down to 0.7 mm.

2. Clauses 8.2.1 (4) and 8.2.1 (5) shall apply to this method of measurement.

3. Commercial instruments may differ; the procedures outlined in the manufacturer's operating manual should be followed.

9 Measurement of lamp reignition-spike voltage

9.1 General

The reignition-spike voltage of a high-intensity-discharge lamp operating on alternating current is defined as the maximum peak arc tube voltage immediately following the transition from one half cycle to the following half cycle during the early warm-up period of the lamp (see figure 7). The reignition-spike voltage characteristic will be a function of the given lamp and the ballast operating the lamp. For a given lamp, the reignition spike voltage may increase or decrease throughout the life of the lamp and may not be symmetrical due to the condition of the electrodes; therefore, the higher of the two voltages shall be deemed the reignition-spike voltage.

For lamp standardization, the reignition-spike voltage is established by taking a measurement on a specified reactor ballast. Deviations from this specified reactor ballast will result in different reignition-spike voltages.

9.2 Measurement of lamp reignition-spike voltage on a reactor ballast as specified in the applicable metal-halide lamp standard

9.2.1 Test circuit and equipment

9.2.1.1 The test circuit shown in figure 3 should be used. Refer to Section 3 for proper selection of meters and oscilloscopes. The principles of circuit and equipment grounding as outlined in 3.5.4 through 3.5.8 shall be followed in setting up this circuit.

9.2.1.2 A power supply having a sinusoidal voltage waveform shall be used. The normal public utility voltage supply is satisfactory for this purpose, provided no unwanted harmonics have been introduced.

9.2.1.3 The power supply, up to and including the isolation transformer, shall have a capacity of at least 5 times the normal lamp current rating.

Copyright National Electrical Manufacturers Association
Provided by IHS under license with NEMA
No reproduction or networking permitted without license from IHS
Not for Resale

9.2.1.4 The linear reactor, if not of the fixed type, shall be adjusted to the values specified in the appropriate ANSI standard and in accordance with the procedure outlined in ANSI C82.5, as referenced in clause 2.

9.2.2 Procedure

The test procedure shall be as follows:

1. Open starting switch, insert lamp, and reclose starting switch.
2. Increase the input voltage until the lamp strikes; return to specified rated input voltage.
3. Record the reignition-spike voltage, this should normally reach a maximum within 15 to 45 seconds after the lamp strikes.
4. The lamp shall be aged within ± 10% of its rated wattage for a minimum of 5 minutes after a measurement.
5. The lamp should be allowed to cool at room temperature in still air between measurements.

Copyright National Electrical Manufacturers Association
Provided by IHS under license with NEMA
No reproduction or networking permitted without license from IHS
Not for Resale

ANSI C78I.387-1995
Revision of ANSI C78.387-1987

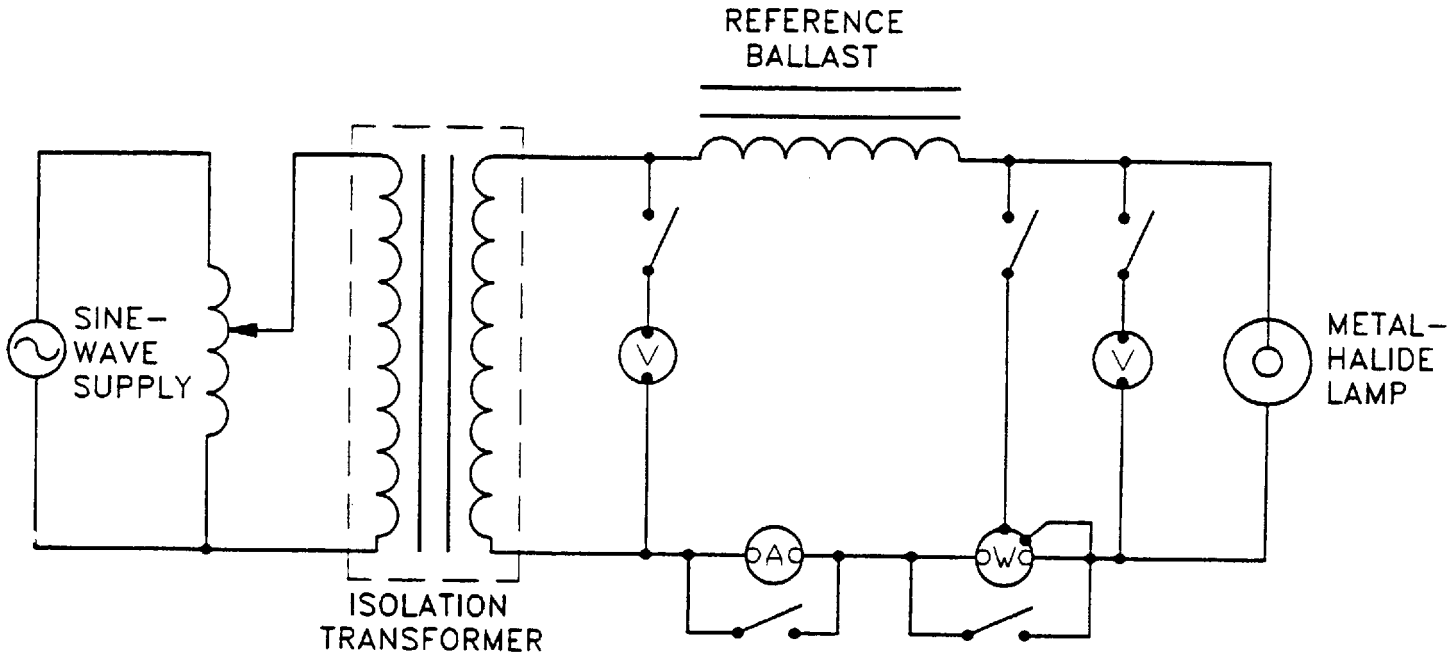

Note—Current terminals are shown as O. Potential terminals are shown as ●.
Warning—Refer to 3.5.4 through 3.5.8 for circuit and equipment grounding procedures

Figure 1
Reference Ballast Circuit for Metal-Halide Lamps

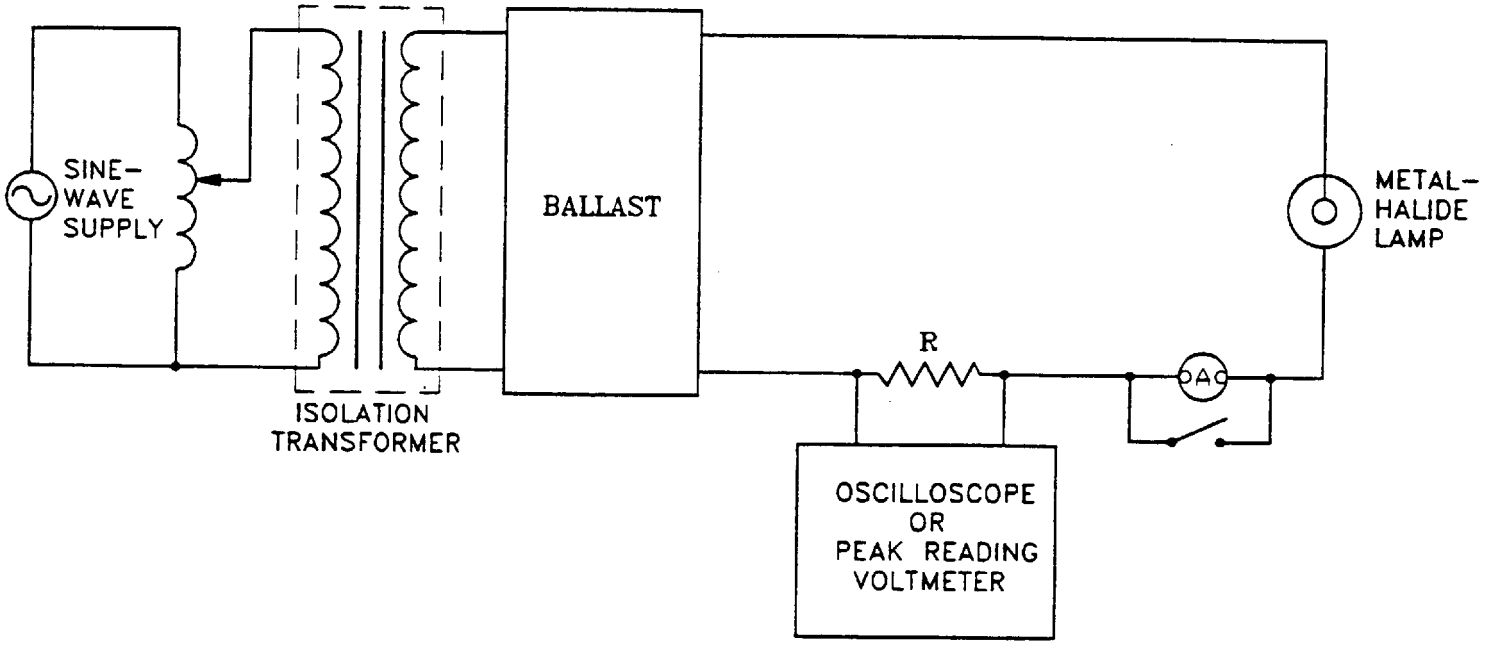

Note—Current terminals are shown as O. Potential terminals are shown as ●.
Warning—Refer to 3.5.4 through 3.5.8 for circuit and equipment grounding procedures

Figure 2
Circuit for Measurement Of Lamp Current Crest Factor

Copyright National Electrical Manufacturers Association
Provided by IHS under license with NEMA
No reproduction or networking permitted without license from IHS
Not for Resale

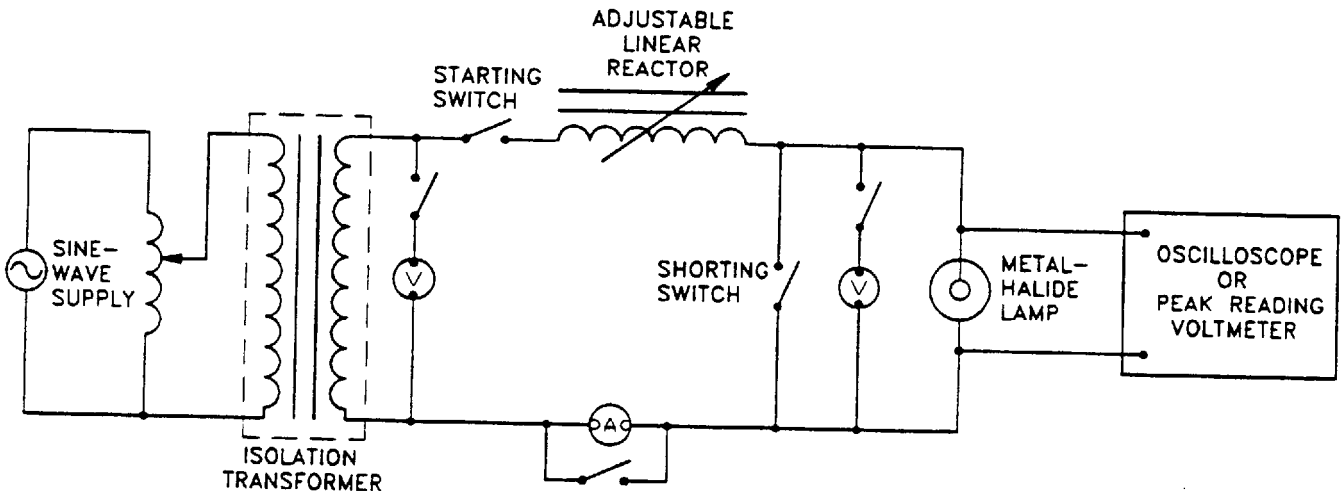

Note—Current terminals are shown as O. Potential terminals are shown as ●.
Warning—Refer to 3.5.4 through 3.5.8 for circuit and equipment grounding procedures

Figure 3
Circuit for Measurement of Lamp Reignition Voltage, Warm-up Time, and Starting Voltage for Lamps Not Requiring Pulse

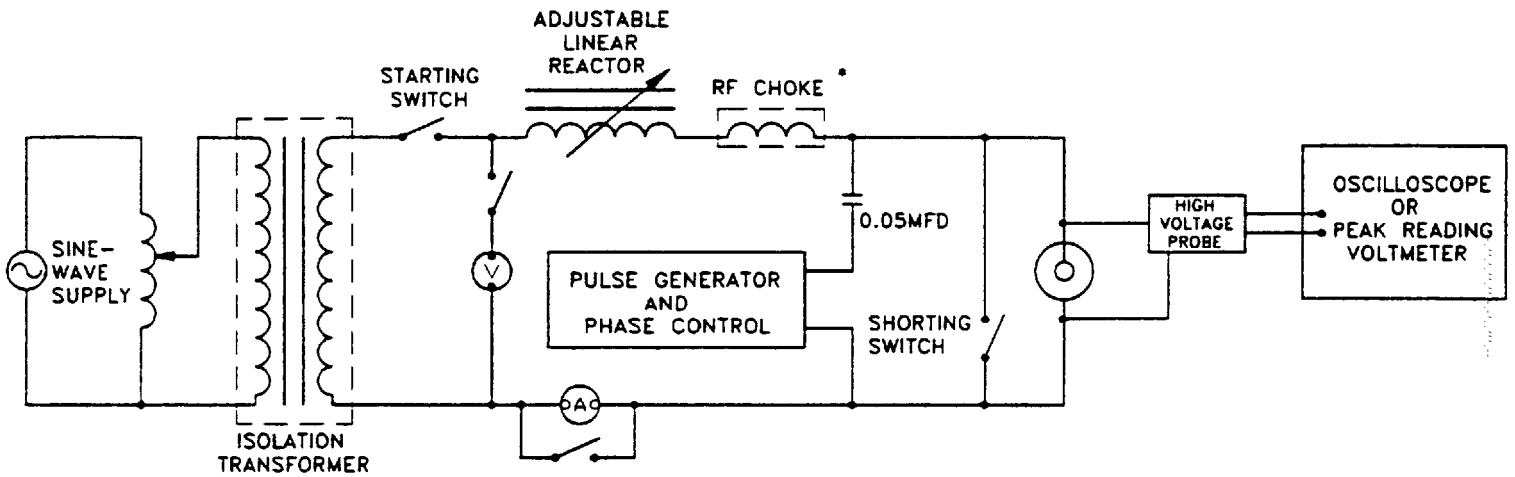

*Optional device to minimize ringing.
Note—Current terminals are shown as O. Potential terminals are shown as ●.
Warning—Refer to 3.5.4 through 3.5.8 for circuit and equipment grounding procedures

Figure 4
Circuit for Measurement of Starting voltage for a Lamp Requiring Pulse Start

Copyright National Electrical Manufacturers Association
Provided by IHS under license with NEMA
No reproduction or networking permitted without license from IHS
Not for Resale

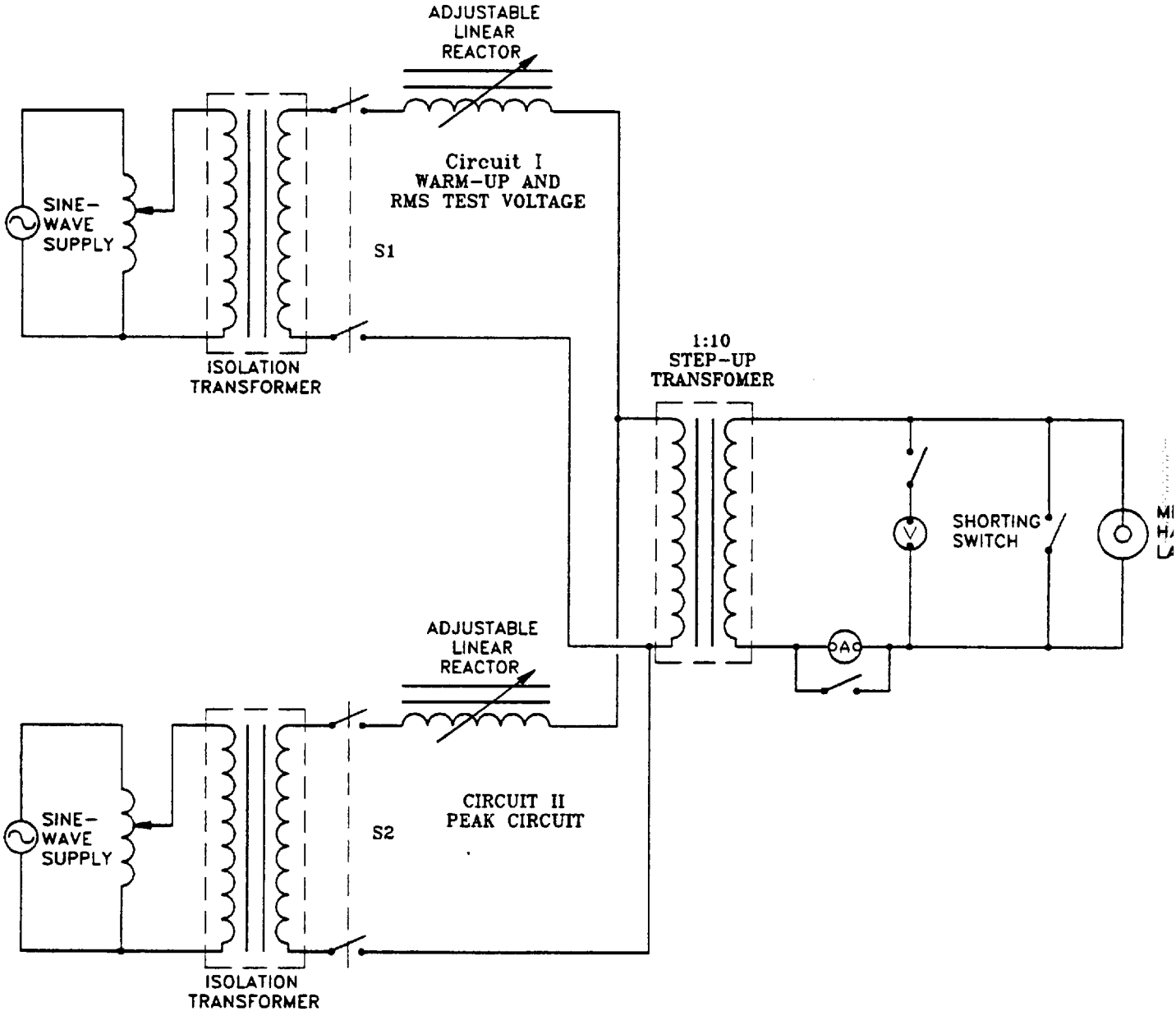

Caution—Switch S1 & S2 shall not be closed at the same time.
Note—Current terminals are shown as O. Potential terminals are shown as ●.
Warning—Refer to 3.5.4 through 3.5.8 for circuit and equipment grounding procedures

Figure 5
Circuit for Measurement of Maximum Voltage Limitations of a Lamp Not Requiring Pulse

Copyright National Electrical Manufacturers Association
Provided by IHS under license with NEMA
No reproduction or networking permitted without license from IHS
Not for Resale

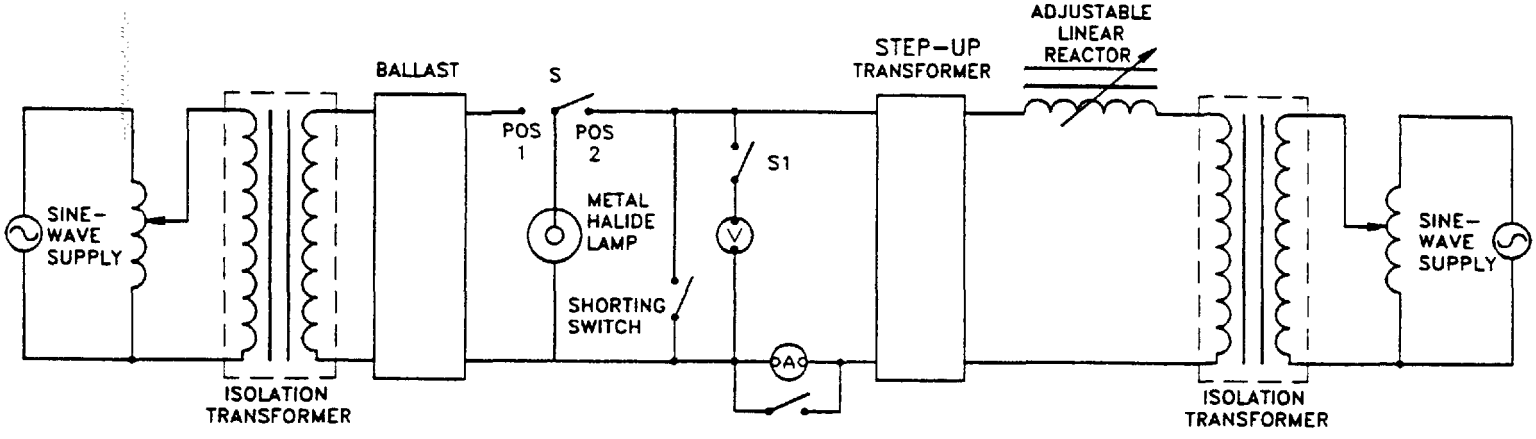

Note—Current terminals are shown as O. Potential terminals are shown as ●.
Warning—Refer to 3.5.4 through 3.5.8 for circuit and equipment grounding procedures

Figure 6
Circuit for Measurement of Maximum Voltage Limitations of a Lamp Requiring Pulse Start

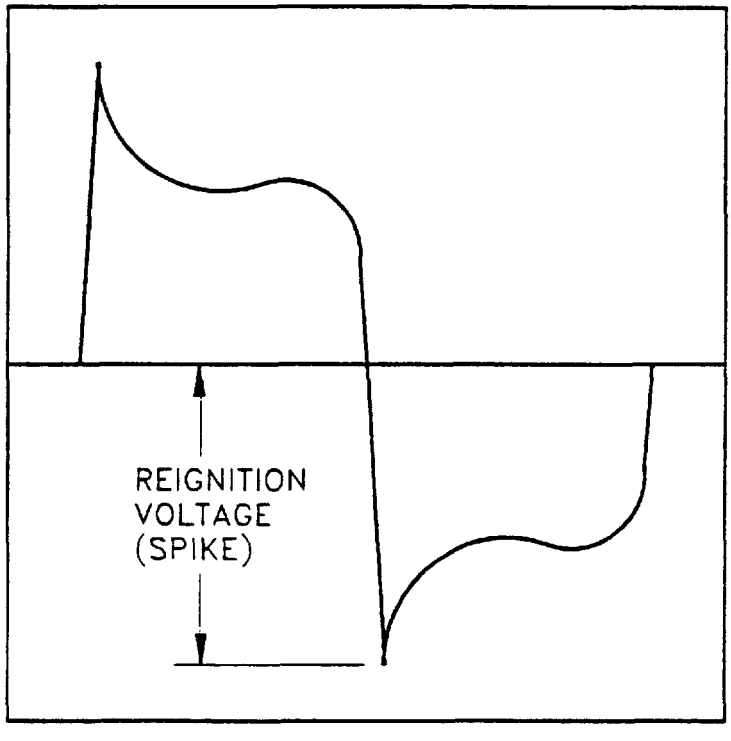

Figure 7
Typical Lamp Reignition Voltage (Spike) of a Metal-Halide Lamp

Copyright National Electrical Manufacturers Association
Provided by IHS under license with NEMA
No reproduction or networking permitted without license from IHS
Not for Resale

ANSI C78I.387-1995
Revision of ANSI C78.387-1987

Copyright National Electrical Manufacturers Association
Provided by IHS under license with NEMA
No reproduction or networking permitted without license from IHS
Not for Resale