

ANSI C78.380-2005
A Revision of ANSI C78.380-2002 plus C78.380a-2004

American National Standard

for electric lamps—

High-Intensity Discharge Lamps, Method of Designation

Copyright National Electrical Manufacturers Association
Provided by IHS under license with NEMA
No reproduction or networking permitted without license from IHS
Not for Resale

Copyright National Electrical Manufacturers Association
Provided by IHS under license with NEMA
No reproduction or networking permitted without license from IHS
Not for Resale

ANSI C78.380- 2005
A Revision of ANSI C78.380-2002 plus C78.380a-2004

American National Standard

Approved May 16, 2005 Secretariat: ANSLG - National Electrical Manufacturers Association

For Electric Lamps-

High-Intensity Discharge Lamps, Method of Designation

An American National Standard implies a consensus of those substantially concerned with its scope and provisions. It is intended as a guide to aid the manufacturer, the consumer, and the general public. The existence of an American National Standard does not in any respect preclude anyone, whether he has approved the standard or not, from manufacturing, marketing, purchasing, or using products, processes, or procedures not conforming to the standards. Users are cautioned to obtain the latest editions.
The American National Standards Institute does not develop standards and will in no circumstances give an interpretation of any American National Standard. Moreover, no person shall have the right or authority to issue an interpretation of an American National Standard in the name of the American National Standards Institute.
CAUTION NOTICE: This American National Standard may be revised or withdrawn at any time. The procedures of the American National Standards Institute require that action be taken periodically to reaffirm, revise, or withdraw this standard. Purchasers of American National Standards may receive current information on all standards by calling or writing the American National Standards Institute.

Copyright © 2005 by American National Standard Lighting Group - NEMA

Copyright National Electrical Manufacturers Association
Provided by IHS under license with NEMA
No reproduction or networking permitted without license from IHS Not for Resale

American National Standard

Approval of an American National Standard requires verification by ANSI that the requirements for due process, consensus, and other criteria for approval have been met by the standards developer.

Consensus is established when, in the judgment of the ANSI Board of Standards Review, substantial agreement has been reached by directly and materially affected interests. Substantial agreement means much more than a simple majority, but not necessarily unanimity. Consensus requires that all views and objections be considered, and that a concerted effort be made toward their resolution.

The use of American National Standards is completely voluntary; their existence does not in any respect preclude anyone, whether he has approved the standards or not, from manufacturing, marketing, purchasing, or using products, processes, or procedures not conforming to the standards.

The American National Standards Institute does not develop standards and will in no circumstances give an interpretation of any American National Standard. Moreover, no person shall have the right or authority to issue an interpretation of an American National Standard in the name of the American National Standards Institute. Requests for interpretations should be addressed to the secretariat or sponsor whose name appears on the title page of this standard.

CAUTION NOTICE: This American National Standard may be revised or withdrawn at any time. The procedures of the American National Standards Institute require that action be taken periodically to reaffirm, revise, or withdraw this standard. Purchasers of American National Standards may receive current information on all standards by calling or writing the American National Standards Institute.

Printed and Distributed by

Information Handling Services/Global Engineering Documents
15 Inverness Way East, Englewood, CO 80112-5776
Under Contract with National Electrical Manufacturers Association

Copyright © 2005 by American National Standard Lighting Group
In Affiliation with National Electrical Manufacturers Association
All rights reserved.

No part of this publication may be reproduced in any form, in an electronic retrieval system or otherwise, without prior written permission of the publisher.

Printed in the United States of America

Copyright © 2005 by American National Standard Lighting Group – NEMA

--`,,`,,`-`-`,,`,,`,`,,`---
Copyright National Electrical Manufacturers Association
Provided by IHS under license with NEMA
No reproduction or networking permitted without license from IHS
Not for Resale

Foreword (This foreword is not part of American National Standard C78.380-2005).

Suggestions for improvement of this standard should be submitted to the Secretariat C78, American National Lighting Group of the National Electrical Manufacturers Association, 1300 North 17th Street, Suite 1847, Rosslyn, VA 22209. This standard was processed and approved by Accredited Standards Committee on Electric Lamps, C78, and its Work Group C78-4. Committee approval of the standard does not necessarily imply that all committee members voted for that approval.

Information concerning the approval of this standard is based on the documents listed in the table below:

Amendment / Change	CDV	RV
Revision	78(4)/4199	78(4)/4200

David Mullen, Chair, C78
David Mullen, Technical Coordinator
Randolph N. Roy, ANSLG Secretariat
Matthew Clark, Coordinating Editor

Copyright © 2005 by American National Standard Lighting Group – NEMA

Copyright National Electrical Manufacturers Association
Provided by IHS under license with NEMA
No reproduction or networking permitted without license from IHS
Not for Resale

Table of Contents

Foreword 3
1 Scope 5
2 Purpose 5
3 Normative references 5
4 Definitions 6
5 Description of a designation 6
5.1 General 6
5.2 Lamp type classification letter 7
5.3 Electrical characteristic number 8
5.4 Luminaire characteristic letter 8
5.5 Physical characteristics 8
5.6 Temperature characteristics 9
5.7 Other information. 9
5.8 Metal halide lamps, illustration of typical designations 9
5.9 Lamp wattage 9
5.10 U.S. code of federal regulations (CFR) 9
6 Criteria for assignment of designations 9
7 Administration of this standard 10
7.1 Administrator 10
7.2 Participants in high-intensity discharge lamp designation program 10
7.3 Consulting body 10
7.4 Procedure for assigning and recording lamp designations 10
7.5 Procedure for assigning and recording a change in the characteristics, of an existing lamp designation. 11
7.6 Resolution procedure 12
7.7 High-intensity discharge lamp designation request form 12
Annex A Luminaire characteristic letters 13
Annex B Guidelines for assigning lamp characteristic codes 14

Copyright © 2005 by American National Standard Lighting Group – NEMA

Copyright National Electrical Manufacturers Association
Provided by IHS under license with NEMA
No reproduction or networking permitted without license from IHS
Not for Resale

1 Scope

This standard describes a system for the designation of high-intensity discharge lamps, including compact, enclosed-arc discharge light sources such as mercury, metal halide, high-pressure sodium, and similar types of lamps. For convenience, low-pressure sodium lamps, although technically not high-intensity discharge lamps, are included with the group.

2 Purpose

The purpose of the designation system covered by this standard is to provide an identification code for use in ANSI standards. Some lamp marking requirements are also identified. Guidance is given as to which characteristics are important (key) to assure interchangeability.

The lamp characteristic data given by a manufacturer on a High-Intensity Discharge Lamp Designation Request Form become the basis for the assignment of a designation. They have not been approved by the American National Standards Institute (ANSI) and do not constitute an American National Standard. Similarly, any consolidated listing of assigned designations with associated characteristics does not constitute an American National Standard.

3 Normative references

The following standards contain provisions, which through reference in this text, constitute provisions of this American National Standard. At the time of publication, the editions indicated were valid. All standards are subject to revision, and parties to agreements based on this American National Standard are encouraged to investigate the possibility of applying the most recent editions of the standards indicated below.

ANSI C78.379-1994, *American National Standard for Electric Lamps - Incandescent and High-Intensity Discharge Reflector Lamps - Classification of Beam Patterns.*

ANSI C78.389-2004, *American National Standard for Electric Lamps: Metal Halide Lamps – Method of Measuring Characteristics*

ANSI C79.1-2002, *American National Standard Nomenclature for Glass Bulbs Intended for Use with Electric Lamps.*

ANSI/IEC C81.61-2003, *American National Standard for Electrical Lamp Bases.*

ANSI C82.9-1996, *American National Standard Definitions for High-Intensity Discharge and Low Pressure Sodium Lamps, Ballasts and Transformers.*

CFR 21CFR Part 1040.30, *U.S. Code of Federal Regulations*

Copyright © 2005 by American National Standard Lighting Group – NEMA

Copyright National Electrical Manufacturers Association
Provided by IHS under license with NEMA
No reproduction or networking permitted without license from IHS
Not for Resale

4 Definitions

In addition to the general definitions given in this section, the Administrator will provide a glossary of terms used in conjunction with a Request Form. See section 7.

Electrical interchangeability - The ability to properly install a replacement lamp in a particular installation where electrical characteristics of lamps and luminaires are compatible in regard to characteristics such as voltage, current, power, open circuit voltage, etc.

Physical interchangeability - The ability to properly install a replacement lamp in a particular installation, based on physical characteristics such as base type, bulb size, lamp length, etc.

Key characteristic - A characteristic identified as having a critical effect on the interchangeability of lamps.

Alternative design - A lamp with key characteristics that are the same but utilize different features that do not affect interchangeability.

Designation program - The procedures and requirements of this standard formulated to provide designations for lamps.

Reflector lamp - A discharge lamp in which part of the bulb, of suitable shape, is coated with a reflecting material so as to control the light.

Note: HID reflector lamps typically employ R or PAR-shaped bulbs.

Lamp manufacturer - A manufacturer who produces finished lamps and offers them for sale.

Sponsor - The originator of a Lamp Designation Request Form.

5 Description of a designation

5.1 General

A lamp designation code shall consist of a combination of letters and numbers in the following sequence:

- Lamp Type Classification Letter
- Electrical Characteristic Number
- Luminaire Characteristic Letter

Quartz and Ceramic Metal Halide Lamps shall be marked with all three items. Other HID lamp types shall be marked with the first two items. Other lamp types may also be marked with the luminaire characteristic letter. Consult the lamp manufacturer before use on ballasts with any code that is not listed on the lamp.

Copyright © 2005 by American National Standard Lighting Group – NEMA

Copyright National Electrical Manufacturers Association
Provided by IHS under license with NEMA
No reproduction or networking permitted without license from IHS
Not for Resale

The code layout is as follows.

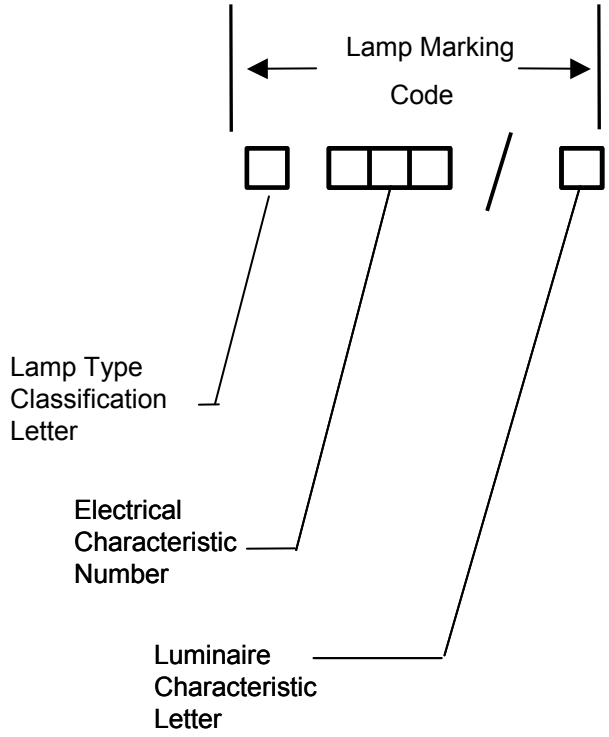

Other than the use of virgules, as defined in this standard, there shall be no spaces or other undefined symbols or separators used in a designation[1].

5.2 Lamp type classification letter

The first letter of a designation represents the high-intensity discharge lamp classification. Classification letters are capital letters from the following list of authorized letters.

B - Self-ballasted mercury lamps

C - Ceramic metal halide lamps

H - Mercury lamps

L - Low-pressure sodium lamps

M - Quartz Metal halide lamps

S - High-pressure sodium lamps

Note: When designations of other types of high-intensity discharge lamps are requested, other letters shall be chosen to represent the new classifications. A single letter, other than those already assigned, shall be assigned by the

1 Lamps that do not conform to an existing electrical characteristic number shall be marked as described in paragraph 5.1 with an underscore in place of the electrical number, e.g. M__/E or M __ /S or M__/O.

Copyright © 2005 by American National Standard Lighting Group – NEMA

Copyright National Electrical Manufacturers Association
Provided by IHS under license with NEMA
No reproduction or networking permitted without license from IHS
Not for Resale

consulting body to represent each additional class of high-intensity discharge lamp.

5.3 Electrical characteristic number

A number shall follow directly after the lamp type classification and it represents the set of all key electrical characteristics of the lamp in question, so as to ensure electrical interchangeability. One set of numbers is the source for all assignments of Characteristic numbers and Characteristic numbers can be used for more than one lamp classification type as long as the additional type conforms to the key electrical characteristics for an additional type in Annex B. For example, a 150W ceramic metal halide lamp that is intended to operate on a ballast intended for M102 quartz metal halide lamps would have the designation C102.

Key electrical characteristics are:

- Lamp wattage, rated
- Lamp voltage, rated
- Lamp operating current
- Lamp starting current
- Minimum open circuit voltage, rms
- Minimum open circuit voltage, peak
- Pulse height, where applicable
- Minimum pulse width, where applicable
- Pulse Repetition Rate (per half cycle), where applicable
- Pulse position, where applicable
- Maximum operating and starting current crest factor
- Minimum sustaining voltage, where applicable
- Maximum current off-time, where applicable
- Requirement for Protection from Rectification, where applicable

5.4 Luminaire characteristic letter

An appropriate luminaire characteristic letter shall be assigned from the list given in Annex A.

5.5 Physical characteristics

Previous versions of this standard defined physical characteristic letters that were intended to be used as a simple marking to match lamps and luminaire. They represented a set of key physical characteristics of the lamp in question, so as to ensure physical interchangeability. These code letters are no longer used except for mercury vapor lamps. See the mercury lamp standard, C78.40 for the codes still in use. The key physical characteristics are as follows and must be specified on the lamp code request form:

- Base designation

Copyright © 2005 by American National Standard Lighting Group – NEMA

Copyright National Electrical Manufacturers Association
Provided by IHS under license with NEMA
No reproduction or networking permitted without license from IHS
Not for Resale

- Bulb shape and diameter (major diameter)
- MOL, for single-ended lamps
- Distances B and C, for double-ended lamps
- LCL, for single-ended, non-reflector lamps with clear outer jackets

5.6 Temperature characteristics

These temperatures define the maximum limit to which the lamp may operate without deterioration to the lamp material. Any increase in the operating temperatures above these values may cause short life and/or lamp failures. The following temperature information must be provided on the lamp code request form:

- Bulb Maximum Temperature
- Base Maximum Temperature

5.7 Other information.

Restrictions on lamp operating position may be noted on the lamp code request form if appropriate.

5.8 Metal halide lamps, illustration of typical designations

Example Designation: M102/O

M Quartz Metal halide lamp classification. (Section 5.2)

102 Electrical characteristic number (see clause 5.3)

O Open luminaire classification (see clause 5.4)

5.9 Lamp wattage

Lamp Wattage shall be marked on the lamp.

5.10 U.S. code of federal regulations (CFR)

Although not a part of this code, marking in accordance with CFR 21CFR part 1040.30, U.S. code of Federal regulations shall be applied when required.

6 Criteria for assignment of designations

6.1 Classification letters as defined in 5.2 shall be assigned directly in relation to the lamp described on a High-Intensity Discharge Lamp Designation Request Form.

6.2 The electrical characteristic numbers shall be assigned from a sequential series of unused numbers starting with 01. Number assignments shall be made in sequence unless a special situation dictates otherwise.

A different number shall be assigned for each unique set of key electrical characteristics, as denoted in 5.3. Key electrical characteristics are identified on the

Copyright © 2005 by American National Standard Lighting Group – NEMA

Copyright National Electrical Manufacturers Association
Provided by IHS under license with NEMA
No reproduction or networking permitted without license from IHS
Not for Resale

Designation Request Form.

A lamp for which a Request Form is filed with the administrator shall be considered to have the same characteristic number as one previously assigned if all the key electrical characteristics are within the limits defined in ANNEX B.

6.3 The luminaire characteristics letter shall be assigned as appropriate (see Annex B).

6.4 Criteria for change

If the change will not affect interchangeability, no new code is needed.

7 Administration of this standard

7.1 Administrator

This standard shall be administered by the Secretary of Accredited Standards Committee C78 through the offices of the National Electrical Manufacturers Association, 1300 North 17th Street, Suite 1847, Rosslyn, VA 22209.

7.2 Participants in high-intensity discharge lamp designation program

Any domestic, foreign lamp manufacturer, or distributor who wishes to obtain designation assignments may participate by filing an initial Request Form with the Administrator.

7.3 Consulting body

Work Group C78-4 of Accredited Standards Committee C78 shall maintain this standard. In addition, it shall serve as a consulting body to which the Administrator or participants may bring questions or other matters needing resolution.

7.4 Procedure for assigning and recording lamp designations

When an electric lamp manufacturer requires a designation for a high-intensity discharge lamp, they shall file with the Administrator a fully completed High-Intensity Discharge Lamp Designation Request Form (see section 7.7) in duplicate. The completed Request Form shall list all key characteristics that are necessary to describe a lamp sufficiently to allow assignment of a designation in accordance with this standard. The box at the top of the Request Form relating to a new designation should be checked.

The Administrator may reject any Request Form that provides insufficient information.

Assignment of a designation shall not be given over the telephone. Requests to reserve designations for further use shall not be accepted.

The Administrator shall search their current records to determine if the information on the Request Form defines a unique set of key electrical characteristics, per the criteria of Section 6.2.

Upon receipt of a completed Request Form, the Administrator shall take one of the

Copyright © 2005 by American National Standard Lighting Group – NEMA

Copyright National Electrical Manufacturers Association
Provided by IHS under license with NEMA
No reproduction or networking permitted without license from IHS
Not for Resale

actions outlined in 1 through 4 shown below.

1. If a designation has not been assigned to a lamp having the same characteristics as those on the Request Form, the Administrator shall assign and record a designation for such a lamp in accordance with the requirements of this standard and shall promptly inform the requesting manufacturer of the designation assigned.
2. If a designation has already been assigned to a lamp having the same characteristics based on the criteria of Section 6.2 as given on the Request Form, the Administrator shall inform the filing manufacturer of the existing designation that may be used for his product.
3. In the event the new designation request has characteristics almost identical to the current lamp data records and the Administrator cannot discriminate the designation based on Section 6.2, then they shall circulate the new Request Form and seek advice from other participants in the High-Intensity Discharge Lamp Designation Program as to whether the same or a new designation should be recorded.
4. In addition, the Administrator shall review the form for special information that would identify safety or other special considerations which may require assignment of a new designation.

After a designation has been assigned and recorded, the Administrator shall circulate copies of the completed Request Form to the manufacturers participating in the High-Intensity Discharge Lamp Designation Program for 60 day review period.

Non-participants in the program may obtain copies from the administrator for a nominal charge per copy.

7.5 Procedure for assigning and recording a change in the characteristics, of an existing lamp designation.

When a lamp manufacturer desires to change the design of an existing lamp, he shall file with the Administrator a High-Intensity Discharge Lamp Designation Request Form. The appropriate box at the top of the form should be checked. The completed form shall list only the characteristic(s) being changed.

Upon receipt of a request for change the Administrator shall send copies of it to members of Subcommittee C78-4 and others participating in the High-Intensity Discharge Lamp Program for their review.

If a requested change will not affect electrical interchangeability the requested change would be expected to be acceptable. Conversely if interchangeability were affected in any way, the change could be unacceptable to one or more participating manufacturers and they could object.

If no objections are received by the Administrator within 60 days after circulation of copies, the file shall be updated accordingly and the Administrator shall notify the participants that the change has been made.

Copyright © 2005 by American National Standard Lighting Group – NEMA

Copyright National Electrical Manufacturers Association
Provided by IHS under license with NEMA
No reproduction or networking permitted without license from IHS
Not for Resale

7.6 Resolution procedure

If a manufacturer wishes to lodge an objection to the issuance of a new lamp code designation number, or to a proposed alternative or change to an existing number, The Program Administrator must be notified in writing within 42 days[2] after distribution to the appropriate industry representatives. The Administrator shall then notify the participants that an objection has been filed, and no designation will be assigned to the request, nor will any change in the recorded characteristics be made, pending resolution by the Administrator in consultation with both parties. Should the Administrator be unable to resolve to both parties satisfaction, the item of dispute shall be deferred to the appropriate subcommittee for resolution at their next regularly convened meeting. If by the 61st day, no comments or objections are received, the lamp code designation is considered approved, and any objection received after that time must go through an appeals process, during which the objecting manufacturer must explain in writing why the disputed lamp code was not questioned during the 42-day comment period, and what detrimental effect the new code will have on that company. On/after the 60th day, the company making application for the new code may start using the new Lamp Code Designation.

7.7 High-intensity discharge lamp designation request form

The official electronic version of the Request Form can be obtained from the Administrator along with a glossary of terms and instructions.

2 The 42-day comment period relates to the letter ballot period, but because of the nature of this work, an additional 18 days is often granted.

Copyright © 2005 by American National Standard Lighting Group – NEMA

Copyright National Electrical Manufacturers Association
Provided by IHS under license with NEMA
No reproduction or networking permitted without license from IHS
Not for Resale

Annex A
(Normative)

Luminaire characteristic letters	
Code Letter	**Lamp and luminaire attributes[3]**
O	Lamp may be used in an open luminaire. The effective actinic UV output of the lamp shall not exceed 2 mW/klm for a non-reflector lamp or 2 mW/($m^2 \cdot$ klx) for a reflector lamp. Metal halide Type O lamps must meet specified containment test requirements[4].
E	Lamp requires an enclosed luminaire that meets industry standards for containment in the event of lamp rupture[5]. The effective actinic UV output of the lamp shall not exceed 2 mW/klm for a non-reflector lamp or 2 mW/($m^2 \cdot$ klx) for a reflector lamp.
F	Lamp requires an enclosed luminaire that meets industry standards for containment in the event of lamp rupture and also provides a UV attenuation barrier and lens interlock[5]. The effective actinic UV output of the lamp exceeds 6 mW/klm for a non-reflector lamp or 6 mW/($m^2 \cdot$ klx) for a reflector lamp.
S	Lamp may be used in an open luminaire if position restrictions[6] are followed. Otherwise, the lamp requires an enclosed luminaire that meets industry standards for containment in the event of lamp rupture[5]. Specified containment test requirements[4] do not apply to this type of lamp. The effective actinic UV output of the lamp shall not exceed 2 mW/klm for a non-reflector lamp or 2 mW/($m^2 \cdot$ klx) for a reflector lamp. This letter is not to be used for luminaire designation on lamps other than metal halide.
X	Restricted (Consult Lamp Manufacturer)

3 The effective actinic UV output noted below is the effective power obtained by weighting the spectral power distribution of the lamp with the UV hazard function S(λ). Information about the relevant UV hazard function is given in ANSI/IESNA RP-27.1-96 Recommended practice for photobiological safety for lamps & lamp systems – general requirements. It only relates to possible hazards regarding UV exposure of human beings. It does not deal with the possible influence of optical radiation on materials.i.e. like damage or discoloration.

4 For test requirements see ANSI C78.389-2004.

5 UL 1598

6 Follow lamp manufacturer's warnings and operating instructions for the product

Copyright © 2005 by American National Standard Lighting Group – NEMA

Copyright National Electrical Manufacturers Association
Provided by IHS under license with NEMA
No reproduction or networking permitted without license from IHS
Not for Resale

Annex B
(Normative)

GUIDELINES FOR ASSIGNING LAMP DESIGNATION CODES

This guideline is to be used only as the criterion to determine whether a new or an existing code is to be assigned to a new designation request under evaluation by the Administrator.

		LIMIT[7]	
KEY CATEGORY	CHARACTERISTIC	Original Lamp Type[8]	Retrofit Lamp Type[9]
❷ **ELECTRICAL**			
	LAMP WATTAGE	± 2%	+2/-10%
	LAMP VOLTAGE	± 2%	+20/-2%
	LAMP CURRENT	± 2%	+2/-15%
	MINIMUM OCV(rms)	+0%/-10%	
	MINIMUM OCV(peak)	+0%/-10%	
	EXTERNAL PULSE REQUIREMENTS		
	MIN. HEIGHT(kV)	+0%/-10%	
	MIN. WIDTH(μsec)	+0%/-50%	
	MIN. REP. RATE(per 1/2 cycle)	+0/-1	
	PULSE POSITION	≥90% of PEAK OCV	
	MAX CURRENT CREST FACTOR	+0.2/-0	
	MIN SUSTAINING VOLTAGE (Vss)	+0/-20%	
	MAX CURRENT OFF-TIME	±10%	
	Requirement for Protection from Rectification – see footnotes	7	10

7 No new ANSI electrical number can be issued if the lamp is within the limits indicated except a new electrical number can be issued if the protection from rectification requirement is different from the existing lamp.

8 The original lamp type has an associated lamp standard or is progressing towards standardization.

9 A retrofit lamp type(s) has a different lamp classification letter than the original lamp type and operates interchangeably on the electrical system including the reference ballast of the original lamp type within all the limits indicated.

10 A new electrical code is required if the retrofit lamp requires rectification protection and the original lamp does not.

Copyright © 2005 by American National Standard Lighting Group – NEMA

Copyright National Electrical Manufacturers Association
Provided by IHS under license with NEMA
No reproduction or networking permitted without license from IHS
Not for Resale