STD.NEMA C78.370-ENGL 1997 ■ 6470247 0513240 T49 ■

AMERICAN NATIONAL STANDARD

American National Standard

ANSI C78.370-1997

AMERICAN NATIONAL STANDARD

FOR ELECTRIC LAMPS—

METHOD OF DESIGNATION FOR ELECTRIC LAMPS—PHOTOGRAPHIC, STAGE AND STUDIO

NATIONAL ELECTRICAL MANUFACTURERS ASSOCIATION
1300 NORTH 17TH STREET, SUITE 1847, ROSSLYN, VA 22209
(703) 841-3200 FAX: (703) 841-3300

Copyright National Electrical Manufacturers Association
Provided by IHS under license with NEMA
No reproduction or networking permitted without license from IHS
Not for Resale

STD.NEMA C78.370-ENGL 1997 ■ 6470247 0513241 985 ■

ANSI C78.370-1997
Revision of ANSI C78.370-1982 (R1995)

American National Standard

for electric lamps—

Method of Designation for Electric Lamps—Photographic, Stage and Studio

Secretariat
Accredited Standards Committee C78

National Electrical Manufacturers Association

Approved August 20, 1997
American National Standards Institute

Copyright National Electrical Manufacturers Association
Provided by IHS under license with NEMA
No reproduction or networking permitted without license from IHS

Not for Resale

ANSI C78.370-1997
Revision of ANSI C78.370-1982 (R1995)

American National Standard

Approval of an American National Standard requires verification by ANSI that the requirements for due process, consensus, and other criteria for approval have been met by the standards developer.

Consensus is established when, in the judgment of the ANSI Board of Standards Review, substantial agreement has been reached by directly and materially affected interests. Substantial agreement means much more than a simple majority, but not necessarily unanimity. Consensus requires that all views and objections be considered, and that a concerted effort be made toward their resolution.

The use of American National Standards is completely voluntary; their existence does not in any respect preclude anyone, whether he has approved the standards or not, from manufacturing, marketing, purchasing, or using products, processes, or procedures not conforming to the standards.

The American National Standards Institute does not develop standards and will in no circumstances give an interpretation of any American National Standard. Moreover, no person shall have the right or authority to issue an interpretation of an American National Standard in the name of the American National Standards Institute. Requests for interpretations should be addressed to the secretariat or sponsor whose name appears on the title page of this standard.

CAUTION NOTICE: This American National Standard may be revised or withdrawn at any time. The procedures of the American National Standards Institute require that action be taken periodically to reaffirm, revise, or withdraw this standard. Purchasers of American National Standards may receive current information on all standards by calling or writing the American National Standards Institute.

Published by

National Electrical Manufacturers Association
1300 North 17th Street, Suite 1847, Rosslyn, VA 22209

Copyright © 1997 by National Electrical Manufacturers Association
All rights reserved.

No part of this publication may be reproduced in any form, in an electronic retrieval system or otherwise, without prior written permission of the publisher.

Printed in the United States of America

Copyright © 1997 by National Electrical Manufacturers Association
1300 North 17th Street, Suite 1847, Rosslyn, VA 22209

First Edition
December 1997

Copyright National Electrical Manufacturers Association
Provided by IHS under license with NEMA
No reproduction or networking permitted without license from IHS
Not for Resale

FOREWORD (This foreword is not part of ANSI C78.370-1987.)

As stated in the scope of this standard, the intended application of the three letter code is only for photographic, stage and studio lamps. Recent discussion by Subcommittee C78-5 has refined the interpretation of photo lamps as those whose primary applications are associated with the taking, processing, duplicating, viewing and projection of images. Such an interpretation does not encompass lamps for display, floodlighting or spotlighting applications.

In actual practice some designation codes have been assigned to lamps for display service. However, designation codes on such lamps do not appear to offer any advantage in controlling correct lamp replacement. Regular lamp ordering abbreviations such as those used on regular PAR lamps are more meaningful. Therefore, Accredited Standards Committee C78 on Electric Lamps plans to cease the assignment of designation codes to display lamps after a suitable adjustment period.

Three years from the approval date of this supplement to ANSI C78.370, the administrator will discontinue assignment of designation codes to display lamps. The scope and related sections of the standard C78.370 will then be appropriately revised. During this period, lamp manufacturers should consider dual marking of lamp identification codes and revising the lamp catalogs as necessary.

This standard contains annexes. Annexes A - D are normative and considered part of this standard; Annex E is informative and is not considered part of this standard.

At the time it approved this standard, the C78 Accredited Standards Committee for Incandescent Lamps had the following members:

Al Rousseau, Chairman, C78
and Technical Coordinator
Randolph N. Roy, Secretariat
Jeanne S. Evans, Coordinating Editor

Organization Represented:	*Name of Representative:*
Advance Transformer Company	Norman Grimshaw
Duro-Test Corporation	Larry Sheinberg
Edison Electric Institute	William Maguire (Delegate)
General Electric	Cynthia Minshall
Illuminating Engineering Society	Rita M. Harrold
ITS, Inc.	Craig Davenport
National Electrical Manufacturers Association	(vacant) (Delegate)
OSRAM SYLVANIA INC.	Peter Bleasby
Philips Lighting Company	Al Rousseau
Underwriters Laboratories, Inc.	David Belt

Copyright © 1997 by National Electrical Manufacturers Association
1300 North 17th Street, Suite 1847, Rosslyn, VA 22209

Copyright National Electrical Manufacturers Association
Provided by IHS under license with NEMA
No reproduction or networking permitted without license from IHS
Not for Resale

ANSI C78.370-1997
Revision of ANSI C78.370-1982 (R1995)

At the time it approved this standard, the C78-1 Sub-Committee for Photographic, Stage and Studio Lamps had the following members:

Organization Represented:	*Name of Representative:*
Eastman Kodak Company	William Moore
GE Lighting	Bernard Rachel
	Cynthia Minshall (Alt.)
OSRAM SYLVANIA INC.	David Fox
	Jeffrey Buschmann (Alt.)
Philips Lighting Company	Al Rousseau
	Ed Hinde (Alt.)
Underwriters Laboratories, Inc.	David Belt

Copyright © 1997 by National Electrical Manufacturers Association
1300 North 17th Street, Suite 1847, Rosslyn, VA 22209

First Edition
December 1997

Copyright National Electrical Manufacturers Association
Provided by IHS under license with NEMA
No reproduction or networking permitted without license from IHS
Not for Resale

ANSI C78.370-1997
Revision of ANSI C78.370-1982 (R1995)

CONTENTS

Foreword iii

1 Scope 1

2 Normative References 1

3 Definitions 2

4 Description of a Designation 2

5 Criteria for Assignment of Designations for New Requests, Alternatives or Changes 2

6 Administration of this Standard 3

7 Photographic, Stage and Studio Lamp Designation Request Form 5

8 Glossary and Instructions for Photographic, Stage and Studio Lamp Designation Request Form 5

ANNEXES

A Schematic Lamp Drawings A-1

B Filament Designations B-1

C Schematic Optical Projection Layouts C-1

D Photographic, Stage and Studio Lamp Designation Request Form D-1

E Bibliography E-1

Copyright © 1997 by National Electrical Manufacturers Association
1300 North 17th Street, Suite 1847, Rosslyn, VA 22209

First Edition
December 1997

Copyright National Electrical Manufacturers Association
Provided by IHS under license with NEMA
No reproduction or networking permitted without license from IHS
Not for Resale

ANSI C78.370-1997
Revision of ANSI C78.370-1982 (R1995)

THIS PAGE INTENTIONALLY

LEFT BLANK

Copyright © 1997 by National Electrical Manufacturers Association
1300 North 17th Street, Suite 1847, Rosslyn, VA 22209

First Edition
December 1997

Copyright National Electrical Manufacturers Association
Provided by IHS under license with NEMA
No reproduction or networking permitted without license from IHS

Not for Resale

AMERICAN NATIONAL STANDARD **ANSI C78.370-1997**

for electric lamps—

Method of Designation for Electric Lamps—Photographic, Stage and Studio

1 Scope and purpose

1.1 Scope

This standard describes a system for the designation of photographic, stage and studio lamps. A form is provided for the use of lamp manufacturers to request a designation assignment, alternative, or change.

1.2 Purpose

The purpose of the designation system defined by this standard is to provide a nationally applicable and convenient lamp identification that may be used for both manufacturing and ordering purposes. The designation will ensure, for the user, the interchangeability of lamps that bear the same designation.

The lamp characteristics data given by a manufacturer on a Lamp Designation Request Form (Request Form) forms the basis for the assignment of a designation. They have not been approved by the American National Standards Institute (ANSI) and do not constitute an American National Standard.

2 Normative references

The following standards contain provisions which, through reference in this text, constitute provisions of this American National Standard. At the time of publication, the editions indicated were valid. All standards are subject to revision, and parties to agreements based on this American National Standard are encouraged to investigate the possibility of applying the most recent editions of the standards indicated below.

ANSI C78.260-1990	*Tubular Tungsten-Halogen Lamps—Physical Characteristics*
ANSI C78.1402-1975 (R1994)	*Dimensions for Projection Lamps—Four Pin, Prefocus, Base Down Type*
ANSI C78.1407-1985 (R1991)	*Dimensions for Projection Lamps—Condenser, Reflector, Four Pin, Prefocus, Base Types*
ANSI C78.1413-1982 (R1994)	*Dimensions and Centering Systems for Projection Lamps—Two Inch (51mm) Integral-Reflector—Rim Reference Projection Lamps—Dimensions of Centering System*
ANSI C78.1450-1983 (R1994)	*Incandescent Projection Lamps—Method of Life Testing*
ANSI C79.1-1994	*Nomenclature for Glass Bulbs Intended for Use with Electric Lamps*
ANSI C81.61-1990 (R1996)	*Electrical Lamp Bases*

Copyright © 1997 by National Electrical Manufacturers Association
1300 North 17th Street, Suite 1847, Rosslyn, VA 22209

Copyright National Electrical Manufacturers Association
Provided by IHS under license with NEMA
No reproduction or networking permitted without license from IHS
Not for Resale

ANSI IT7.201-1991	*Audiovisual Systems—Slide Projectors and Film Strip Projectors—Illumination Test.*
ANSI SR 24e-1992	*ANSI Assigned Lamp Codes*

3 Definitions

In addition to the general definitions given here, a glossary of items used in conjunction with a Request Form is presented in section 9.

Alternative design—A lamp with electrical characteristics the same as or similar to an existing lamp, but utilizing a different major feature such as bulb shape of filament shape that does not affect interchangeability.

Designation program—The procedures and requirements of this standard formulated to provide designations for lamps.

Lamp manufacturer—A manufacturer who produces finished lamps and offers them for sale.

Photographic, stage and studio lamps—those lamps whose primary application is associated with the taking, processing, duplication, viewing and projection of images.

Sponsor—The originator of a lamp designation request form.

4 Description of a designation

The lamp designation shall consist of a combination of three letters of the alphabet. The designation symbol shall have no significance but shall serve merely as an identifying symbol. The letters I, O, Q, and U shall not be used. Combinations of letters resulting in words or familiar abbreviations shall not be employed for lamp identification. Only the three letters of a designation shall be used. There shall be no hyphens, spaces, prefixes or suffixes employed, except as provided for in section 6.

Note: Although none of the lamp characteristics will be evident from the lamp designation, they may be determined by reference to a lamp manufacturer's catalog or to SR24.

5 Criteria for assignment of designations for new requests, alternatives or changes

5.1 A lamp designation, following the format of section 5 shall be assigned only to a lamp whose characteristics are unique, not the same as or similar to an existing set of key electrical, physical, and performance characteristics. A lamp for which a Request Form is filed shall be considered to have the same electrical, physical and performance characteristics as one previously assigned if the characteristics are within the following tolerances:

- Voltage ± 5 %
- Wattage ± 5 %
- Mean spherical candela ± 20 %
- Screen Lumens in same projection system ± 20 %
- Corner/Center Ratio in same projection system ± 15 points
- Correlated Color Temperature ± 100 Kelvins
- rated life ± 50 %
- working distance ± 5%

All lamp designations shall be taken from a master list regardless of base, bulb size, or other physical characteristics. Assignment may be random order.

Copyright © 1997 by National Electrical Manufacturers Association
1300 North 17th Street, Suite 1847, Rosslyn, VA 22209
First Edition
December 1997

Copyright National Electrical Manufacturers Association
Provided by IHS under license with NEMA
No reproduction or networking permitted without license from IHS
Not for Resale

5.1.1 Voltage variations within the criteria

A manufacturer may choose to offer more than one voltage variation of a lamp design falling within the criteria of 5.1. For example, the ± 5 % voltage range would cover both 120 V and 125 V variations of a particular lamp design without the need to assign a second designation. If two such lamp voltage variations are available, it will be necessary for the manufacturer to identify them by a combination of the three letter designation and a voltage identifier as: DAK 120V and DAK 125V.

5.1.2 Special voltage variations outside the criteria

The commonly available supply voltages of 220V and 240V are separated beyond the ± 5% voltage criteria of 5.1. This separation would ordinarily indicate that separate lamp designations should be assigned. However, for designs that are common in all aspects except voltage, little would be gained by assigning separate designations. Therefore, an exception is allowed for 220V and 240V lamps. If such voltage variations of the same basic design are available; (a) requests for two designations are not necessary and (b) it will be necessary for the manufacturer to identify them by a combination of the three letter designation and a voltage identifier as: EXD 220V and EXD 240V.

5.2 Criteria for alternative design

Alternative designs will not be recognized by any change in the lamp code. The lamp manufacturer is responsible for ensuring that any change in the lamp design does not affect dimensional, optical, photometric or electrical interchangeability.

Conversely, if interchangeability is affected in any way, changing a key characteristic by more than the tolerances of 5.1, it shall be necessary to file for a new designation.

5.3 Criteria for design change

If the requested change will not affect the dimensional, optical, photometric or electrical interchangeability, it can be accepted. Conversely, if interchangeability is affected in any way or the criteria of 5.1 are exceeded, it shall be necessary to file for a new designation.

6 Administration of this standard

6.1 Administrator

This standard shall be administered by the Secretary of Accredited Standards Committee C78 through the offices of the National Electrical Manufacturers Association, 1300 N. 17th St., Suite 1847, Rosslyn, VA 22209.

6.2 Participants in photographic, stage and studio lamp designation program

Any domestic or foreign lamp manufacturer who wishes to obtain designation assignments for lamps they manufacture or market may participate by filing a Request Form with the administrator and paying the appropriate fee.

6.3 Consulting body

The relevant subcommittee of Accredited Standard Committee C78 shall maintain this standard. In addition, it shall serve as a consulting body to which the administrator may bring questions and other matters needing resolution.

Copyright © 1997 by National Electrical Manufacturers Association
1300 North 17th Street, Suite 1847, Rosslyn, VA 22209

Copyright National Electrical Manufacturers Association
Provided by IHS under license with NEMA
No reproduction or networking permitted without license from IHS
Not for Resale

6.4 Procedure for assigning and recording lamp designations

6.4.1 When an electric lamp manufacturer requires a designation for a photographic, stage or studio lamp, they shall file with the administrator a fully completed Photographic, Stage and Studio Lamp Designation Request Form (see Section 8) in duplicate. The box at the top of the form relating to a new designation should be checked. The completed Request Form shall list such characteristics as are necessary to describe the lamp sufficiently to allow the assignment of a designation in accordance with this standard.

A lamp drawing shall accompany each Request Form. Lamp drawings from the appendix of this standard may be completed or if the lamp does not resemble one of these drawings, a special drawing must be included. The drawing should provide sufficient detail to ensure interchangeability.

6.4.2 The administrator will reject any Request Form that provides insufficient information.

6.4.2(a) The administrator shall reject any Request Form indicating service for display or general lighting in Line 1 (a).

6.4.3 Assignment of a designation shall not be given over the telephone. Written requests to reserve designations for future use shall be accepted and kept current for a period of one year. The reservation(s) shall be renewable at one year intervals. If a renewal request is not received from the manufacturer within a reasonable amount of time, the administrator shall cancel the reservation 30 days after notifying the manufacturer of his intent to do so.

6.4.4 Upon receipt of a completed Request Form, the administrator shall take one of the actions outlined in 6.4.4.1 through 6.4.4.3. The administrator shall search the records to determine if the information on the Request Form defines a unique set of characteristics, per the criteria of Section 6.

6.4.4.1 If a designation has not been assigned to a lamp having the same characteristics as those given in the Request Form, the administrator shall assign and record a designation for such a lamp and shall promptly inform the requesting manufacturer of the designation assigned.

6.4.4.2 If a designation has already been assigned to a lamp having the same characteristics based on the criteria of section 6, as given in the Request Form, the administrator shall inform the filing manufacturer of the existing designation that may be used for his product.

6.4.4.3 If a lamp is on record with characteristics almost identical to those on the Request Form and has been assigned a designation (released or not, in accordance with 6.4.5), the Administrator shall circulate the new Request Form and seek advice from the manufacturers participating in the Photographic, Stage and Studio Lamp Designation Program as to whether the same or a new designation shall be recorded.

6.4.5 After a designation has been assigned and recorded, the administrator shall immediately circulate copies of the completed Request Form to the manufacturers participating in the photographic, stage and studio lamp designation program. The submitting manufacturer has the option of delaying the circulation of the Request Form up to 60 days, as indicated on the Request Form.

A nonparticipant may obtain copies of a completed Request Form from the administrator for a nominal charge per copy.

If no objections are received by the administrator within 60 days after circulation of copies, the new design shall be listed.

Copyright © 1997 by National Electrical Manufacturers Association
1300 North 17th Street, Suite 1847, Rosslyn, VA 22209

Copyright National Electrical Manufacturers Association
Provided by IHS under license with NEMA
No reproduction or networking permitted without license from IHS
Not for Resale

6.5 Procedure for assigning and recording a change in characteristics of an existing lamp designation

6.5.1 When a lamp manufacturer desires to record a change in design of an existing lamp, he shall file with the administrator a Photographic, Stage and Studio Lamp Designation Request Form (see Section 7) in duplicate. The appropriate box at the top of the form should be checked. The completed form shall list only the characteristic(s) being changed.

6.5.2 Upon receipt of a request for change, the administrator shall send copies of it to members of the relevant ANSI committee and all others participating in the Photographic, Stage and Studio Lamp Designation Program for their review.

If no objections are received by the administrator within 60 days after circulation of copies, the file shall be updated accordingly and the Administrator shall notify the participants that the change has been made.

6.6 Resolution procedure

If a participant does not concur with a circulated Request Form covering a new design or a proposed change, the administrator should be notified within the aforementioned 60 day period. Matters that are not resolved by the administrator shall be referred to the relevant committee for resolution. The administrator shall then notify participants that an objection has been filed and no designation will be assigned to the request, nor will any change in recorded characteristics be made pending resolution later.

7 Photographic, Stage and Studio Lamp Designation Request Form

The official Request Form is available as a three-part form from the administrator. A sample format is presented in the Annex D.

The glossary and instructions for the form, section 8, provide the necessary guidance for proper entry of the required data on the form.

8 Glossary and Instructions for Photographic, Stage and Studio Lamp Designation Form

The information in this section defines the terms used on the Photographic, Stage and Studio Lamp Designation Request Form and explains the entries to be made thereon. The following item numbers refer to the corresponding lines of the Request Form, shown in Annex D.

1(a) Service shall be shown by one of the following words to represent the initial purpose for which the lamp is designed:
- Micrographic (Data retrieval)
- Projection (Image enlargement or reduction)
- Studio (Theatrical, Television, and Photographic)
- Miscellaneous (All other applications)

Additional modifying words may be added if the lamp is intended for a specific object or image size or for other criteria that will help to identify its service. For example: regular 8mm or Super 8mm, 16mm, 35mm single or double frame, darkroom, overhead.

1(b) Projection Lens: If the lamp is designed for use with a projection lens of a particular relative aperture and focal length, details shall be shown.

1(c) Condensing lens: If the lamp is designed for use with a condensing lens of a particular focal length, details shall be shown.

Copyright © 1997 by National Electrical Manufacturers Association
1300 North 17th Street, Suite 1847, Rosslyn, VA 22209

Copyright National Electrical Manufacturers Association
Provided by IHS under license with NEMA
No reproduction or networking permitted without license from IHS
Not for Resale

2 Base shall be defined by the IEC designation shown in the American National Standards C81 series unless the base is special. If the base is special, a base drawing shall be provided.

3(a) Bulb shall be defined as shown in the American National Standard. C79.1 or an appropriate bulb drawing shall be attached to the request form.

3(b) Finish shall be designated only if it is significant to both characteristics and application of the lamp, for example: Frosted, Ruby, Clear.

3(c) Material shall be designated: for example; Vitreous silica, Soft glass, Hard glass.

3(d) Top, or stray light shield, if present, shall be indicated by use of the word: opaque.

4 Reflector, no comment is required unless one is a part of the lamp.

4(a) Location of the reflector shall be indicated as one of the following:
Internal – within the envelope or bulb
Integral – external to the envelope or bulb, but an integral part of the lamp unit.

4(b) Functional Description shall be noted by use of one of the following: Condensing, Proximity, Reimaging.

4(c) Coating/Finish presence shall be indicated by one or more of the following; Glass opaque, Glass Dichroic, Metallic.

4(d) Reference Position shall be indicated as one of the following: Rim reference – where the reflector rim reference is primary; Base reference – assumed if not indicated.

5 Lens/Shield if present shall be indicated by one of the following: Condensing Lens, Opaque Shield, Clear Shield.

6 Operating Position shall be indicated as base down, or base down to 90 degrees, or base up, etc.

7 Ventilation requirements for open rack life testing shall be indicated by one of the following; Convection, Forced.

8(a) Filament shall be indicated by one of the descriptive codes in Annex B if significant to lamp interchangeability.

8(b) (c) (d) W Maximum, H Maximum, and T Maximum shall be dimensioned in millimeters to show the "box" location limits centered on the intersection of the light center and lamp axis. No entry is required for lamps using an integral condensing system.

9 Fuse requirements shall be indicated only if needed external to the lamp.

10 Wattage shall be the rated wattage of the lamp. A lamp whose design wattage differs from a similarly designated lamp by an amount greater that 5 % shall be assigned a new designation.

11 Voltage shall be the rated voltage of the lamp. A lamp whose design voltage differs from a similarly designated lamp by an amount greater than 5 % shall be assigned a new designation. Voltage range may be specified, but the rated voltage shall be defined as the voltage nearest the center of the range.
Note that despite these changes to ANSI C78.370, any prior existing three letter designation (formerly code) shall remain in effect.

12 Rated Life shall be as assigned by the lamp manufacturer. A difference of 50 percent in rated life will be necessary for a new code to be assigned. See American National Standard, ANSI C78.1450.

13 Sphere Lumens shall be shown as a rated value. A difference of 20 percent in sphere lumens will be necessary for a new code to be assigned. No entry is required for lamps using an integral condensing system or integral reflector.

14(a) Drawing Reference shall be to the most appropriate drawing selected from Annex A or C. If no drawing in Annex A or C is representative of the lamp form, a new similarly dimensioned schematic drawing shall be supplied by the requesting manufacturer.

14(b) to 14(k) Dimensions shall be shown in millimeters and referred to the similarly identified dimensions of the schematic lamp drawing.

15(a) Layout reference shall be to the most appropriate application layout selected from Annex C. These optical projection systems are used to set up basic test parameters referenced in American National Standard, ANSI IT7.201.

Copyright © 1997 by National Electrical Manufacturers Association
1300 North 17th Street, Suite 1847, Rosslyn, VA 22209
First Edition
December 1997

Copyright National Electrical Manufacturers Association
Provided by IHS under license with NEMA
No reproduction or networking permitted without license from IHS
Not for Resale

15(b) to 15(d) Dimensions shall be shown in millimeters showing the location of the film plane (or aperture) and condenser lens by the identified dimensions of the schematic layouts.

15(e) Screen Lumens shall be a rated value measured in accordance with the procedures referenced in ANSI IT7.201. A difference in screen lumens of 20 percent in the same projection system will be necessary for a new code to be assigned.

15(f) Corner/Center Ratio shall be shown as a percentage value for the "average of four corners". The value represents the ratio of the average corner illumination value to the center illumination value, measured in accordance with ANSI IT7.201. A difference of 15 percentage points will be necessary for a new code to be assigned.
Screen lumens and corner-to-center ratio are indicative of the originally intended lamp performance criteria and can be duplicated only by recreating the original test conditions.

16 Correlated Color Temperature shall be expressed in Kelvin Units (K). A minimum difference of 100 Kelvins will be necessary for a new code to be assigned.

17 Base Temperature shall be expressed in degrees Celsius minimum or maximum, or both, and shall apply to base materials that may experience limiting service temperatures.

18 Seal Temperature or pinch temperature shall be expressed in degrees Celsius minimum or maximum, or both, and shall apply to the area where the power leads are sealed into the bulb material.

19 Bulb Temperature shall be expressed in degrees Celsius minimum, or maximum, or both, and shall apply to any area of the bulb that may experience limiting service temperatures.

20 Beam Spread shall be expressed per American National Standard Method for the Classification of Beam Patterns of Incandescent and High-Intensity Discharge Reflector Lamps, ANSI C78.379.

21 Candlepower shall be the beam candle power expressed in candelas and measured on the optical axis of the intended direction and distribution of light. See American National Standard Method for the Classification of Beam Patterns of Incandescent and High-Intensity Discharge Reflector Lamps, ANSI C78.379.

22 Special Data shall encompass any explanatory notes required for more explicit definition and shall be referenced by number to any of the foregoing statements.

Copyright © 1997 by National Electrical Manufacturers Association
1300 North 17th Street, Suite 1847, Rosslyn, VA 22209

Copyright National Electrical Manufacturers Association
Provided by IHS under license with NEMA
No reproduction or networking permitted without license from IHS
Not for Resale

ANSI C78.370-1997
Revision of ANSI C78.370-1982 (R1995)

THIS PAGE INTENTIONALLY

LEFT BLANK

Copyright © 1997 by National Electrical Manufacturers Association
1300 North 17th Street, Suite 1847, Rosslyn, VA 22209

First Edition
December 1997

Copyright National Electrical Manufacturers Association
Provided by IHS under license with NEMA
No reproduction or networking permitted without license from IHS

Not for Resale

ANSI C78.370-1997
Revision of ANSI C78.370-1982 (R1995)

ANNEXES

Copyright © 1997 by National Electrical Manufacturers Association
1300 North 17th Street, Suite 1847, Rosslyn, VA 22209

First Edition
December 1997

Copyright National Electrical Manufacturers Association
Provided by IHS under license with NEMA
No reproduction or networking permitted without license from IHS

Not for Resale

ANSI C78.370-1997
Revision of ANSI C78.370-1982 (R1995)

THIS PAGE INTENTIONALLY

LEFT BLANK

Copyright © 1997 by National Electrical Manufacturers Association
1300 North 17th Street, Suite 1847, Rosslyn, VA 22209

First Edition
December 1997

Copyright National Electrical Manufacturers Association
Provided by IHS under license with NEMA
No reproduction or networking permitted without license from IHS

Not for Resale

ANNEX A
(Normative)
Schematic lamp drawings

The most appropriate schematic lamp drawings shown in figures A1 through A9 should be selected and the identification entered on line 9(a) of the Photo Lamp Designation Request Form. Exact numbers, representing each letter dimension, should also be entered on lines 9(b)-9(k).

The schematic lamp drawings show the following basic lamp forms:

A1 Internal condensing reflector - four-pin
A2 External condensing reflector - side-pin
A3 External condensing reflector - rim reference
A4 Quartz halogen - three-pin
A5 Tubular
A6 Sealed reflector and lens
A7 Bipin glass base
A8 Two-pin base
A9 Miscellaneous metal shell bases and four-pin (non-reflector) bases

If no drawing in Annex A is representative of the lamp form for which a designation is being requested, then a new, similarly dimensioned, schematic drawing should be supplied by the requesting manufacturer.

Copyright © 1997 by National Electrical Manufacturers Association
1300 North 17th Street, Suite 1847, Rosslyn, VA 22209

Copyright National Electrical Manufacturers Association
Provided by IHS under license with NEMA
No reproduction or networking permitted without license from IHS
Not for Resale

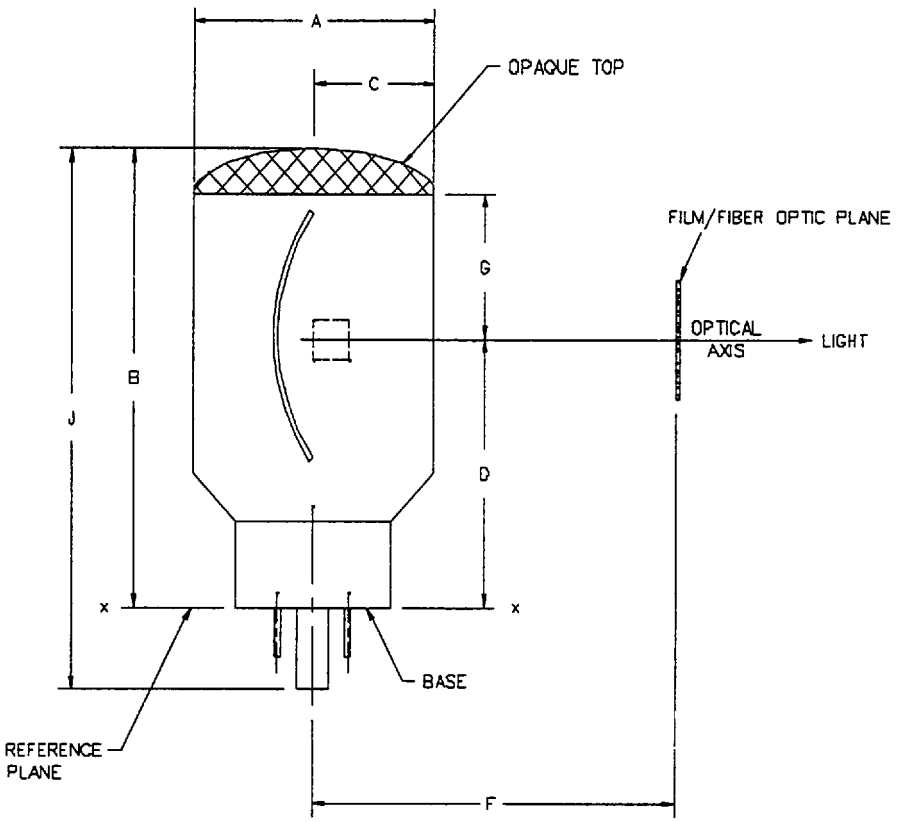

Dimensions	
A	Maximum
B	Maximum
C	Maximum excursion
D	Basic light-center length
F	Basic working distance
G	Minimum
J	Maximum overall length

Bases	
IEC Designation	Referenced to American National Standard
G17q	ANSI C81.61
GX17q	

See American National Standards,
ANSI C78.1402 and ANSI C78.1407

Figure A1 – Internal condensing reflector—four-pin lamp

Copyright © 1997 by National Electrical Manufacturers Association
1300 North 17th Street, Suite 1847, Rosslyn, VA 22209
First Edition
December 1997

Copyright National Electrical Manufacturers Association
Provided by IHS under license with NEMA
No reproduction or networking permitted without license from IHS
Not for Resale

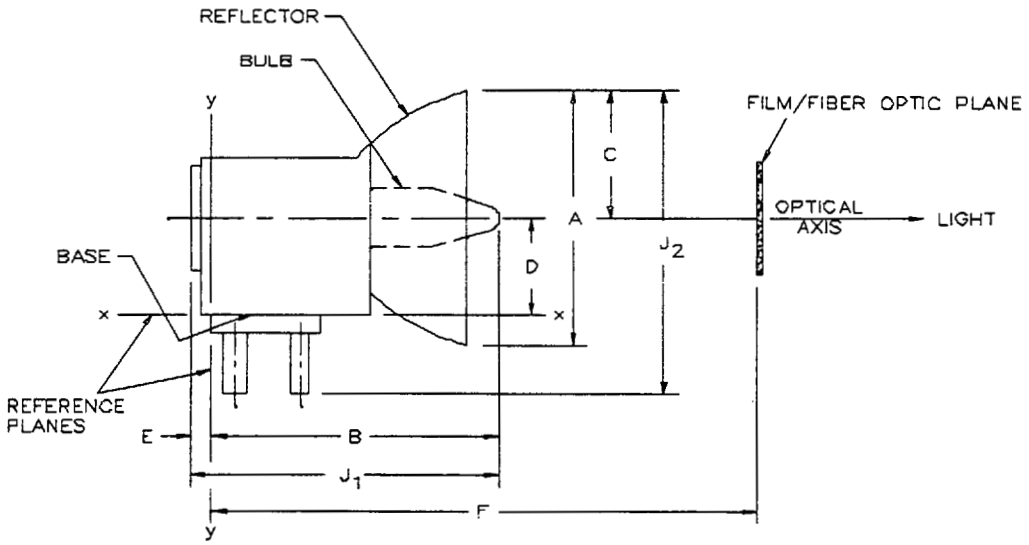

Dimensions		Bases	
			Referenced to
A	Maximum	IEC Designation	American National Standard
B	Maximum length from reference y-y	G7.9	ANSI C81.61
C	Maximum excursion	GX7.9	
D	Basic light-center length from reference x-x		
E	Maximum from reference y-y		
F	Basic working distance		
J_1	Maximum overall length		
J_2	Maximum overall length		

Figure A2 – External condensing reflector—side-pin lamp

Copyright © 1997 by National Electrical Manufacturers Association
1300 North 17th Street, Suite 1847, Rosslyn, VA 22209

Copyright National Electrical Manufacturers Association
Provided by IHS under license with NEMA
No reproduction or networking permitted without license from IHS
Not for Resale

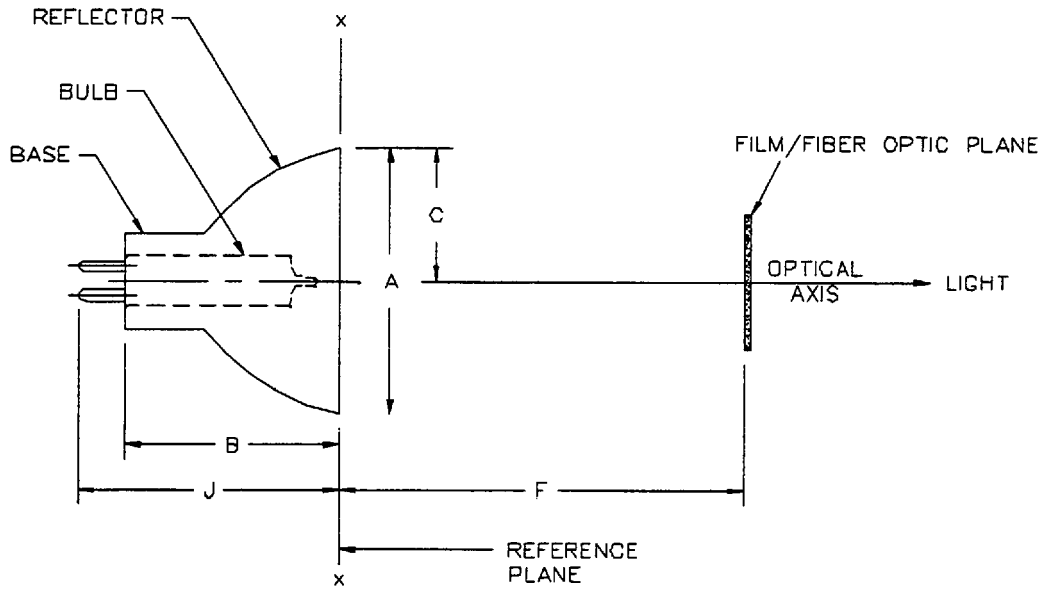

Dimensions	
A	Maximum
B	Maximum
C	Maximum excursion
F	Basic working distance
J	Maximum overall length from reference

Bases	
	Referenced to
IEC Designation	American National Standard
GX5.3	ANSI C81.61
GY5.3	

See American National Standard, ANSI C78.1413

Figure A3 – External condensing reflector—rim reference lamp

Copyright © 1997 by National Electrical Manufacturers Association
1300 North 17th Street, Suite 1847, Rosslyn, VA 22209

Copyright National Electrical Manufacturers Association
Provided by IHS under license with NEMA
No reproduction or networking permitted without license from IHS
Not for Resale

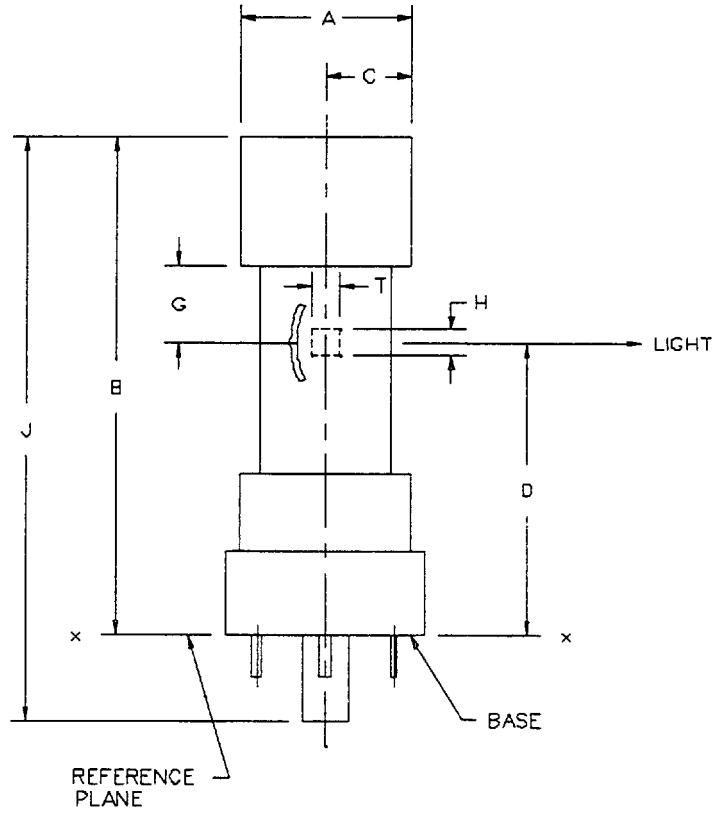

Dimensions	
A	Maximum including excursion
B	Maximum
C	Maximum excursion
D	Basic light-center length
G	Minimum
H	Maximum
J	Maximum overall length
T	Maximum
W	Maximum (see Section 8, item 8(b))

Bases	
	Referenced to
IEC Designation	American National Standard
G17q	ANSI C81.61
GX17q	

Figure A4 – Quartz halogen—three-pin lamp

Copyright © 1997 by National Electrical Manufacturers Association
1300 North 17th Street, Suite 1847, Rosslyn, VA 22209

Copyright National Electrical Manufacturers Association
Provided by IHS under license with NEMA
No reproduction or networking permitted without license from IHS
Not for Resale

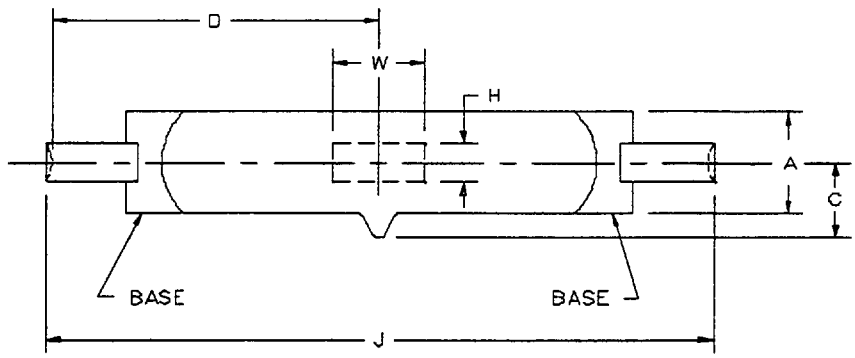

NOTE: Define location of exhaust tip with respect to plane of pinches and enter on Line 22. Special Data, of Photo Lamp Designation Request Form.

Dimensions		Bases	
			Referenced to
A	Maximum including excursion	IEC Designation	American National Standard
B	Maximum excursion including exhaust tip	R7s*	ANSI C81.61
D	Basic light-center length (from bottom-of-contact to light center)	R7s†	
H	Maximum		
J	Maximum overall length		
T	Maximum (see Section 8, item 8(d))		
W	Maximum		

* Type A
† Type B

NOTE: Dimension J is to be based on the maximum bottom of contact to bottom of contact dimension plus a constant of 3.6mm (2x1.8mm). See ANSI C78.260.

Figure A5 – Tubular lamp

Copyright © 1997 by National Electrical Manufacturers Association
1300 North 17th Street, Suite 1847, Rosslyn, VA 22209

Copyright National Electrical Manufacturers Association
Provided by IHS under license with NEMA
No reproduction or networking permitted without license from IHS
Not for Resale

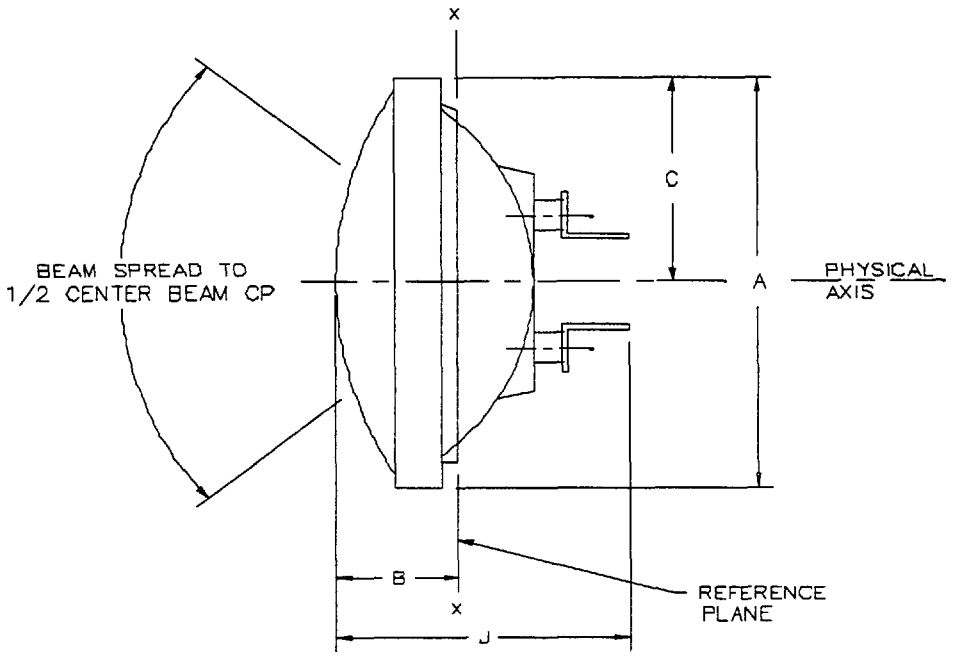

NOTE: See SAE J760. Dimensional Specifications for General Sealed Lighting Units, December 1974 and SAE J572, Requirements for Sealed Lighting Unit for Construction and Industrial Machines, May 1986.

Dimensions		Bases	
		Referenced to	
A	Maximum	IEC Designation	American National Standard
B	Maximum	G16d	ANSI C81.61
C	Maximum excursion		
J	Maximum overall length		

Figure A6 – Sealed reflector and lens lamp

Copyright © 1997 by National Electrical Manufacturers Association
1300 North 17th Street, Suite 1847, Rosslyn, VA 22209

Copyright National Electrical Manufacturers Association
Provided by IHS under license with NEMA
No reproduction or networking permitted without license from IHS
Not for Resale

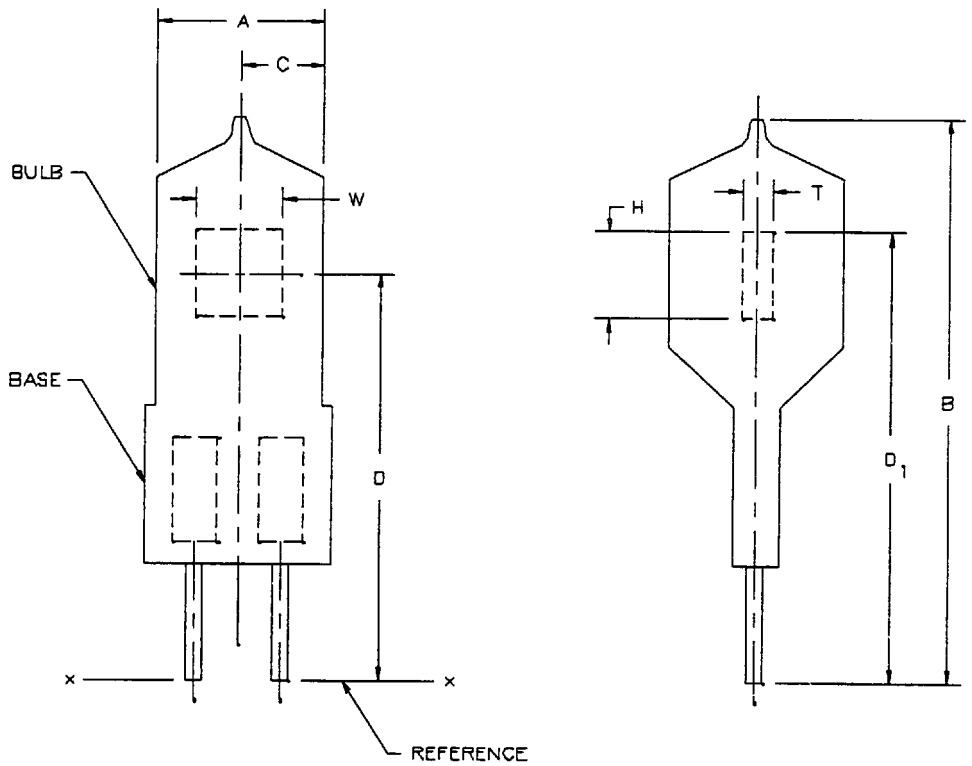

Dimensions

- A Maximum dimension
- B Maximum overall length from ref. x-x
- C Maximum excursion of bulb
- D Basic light-center length
- D_1 Basic light-center length for reimaged filaments
- H Maximum
- T Maximum
- W Maximum

Bases	
	Referenced to
IEC Designation	American National Standard
G6.35-15	ANSI C81.61
GY6.35-13	

Figure A7 – Bi-pin glass base lamp

Copyright © 1997 by National Electrical Manufacturers Association
1300 North 17th Street, Suite 1847, Rosslyn, VA 22209

Copyright National Electrical Manufacturers Association
Provided by IHS under license with NEMA
No reproduction or networking permitted without license from IHS
Not for Resale

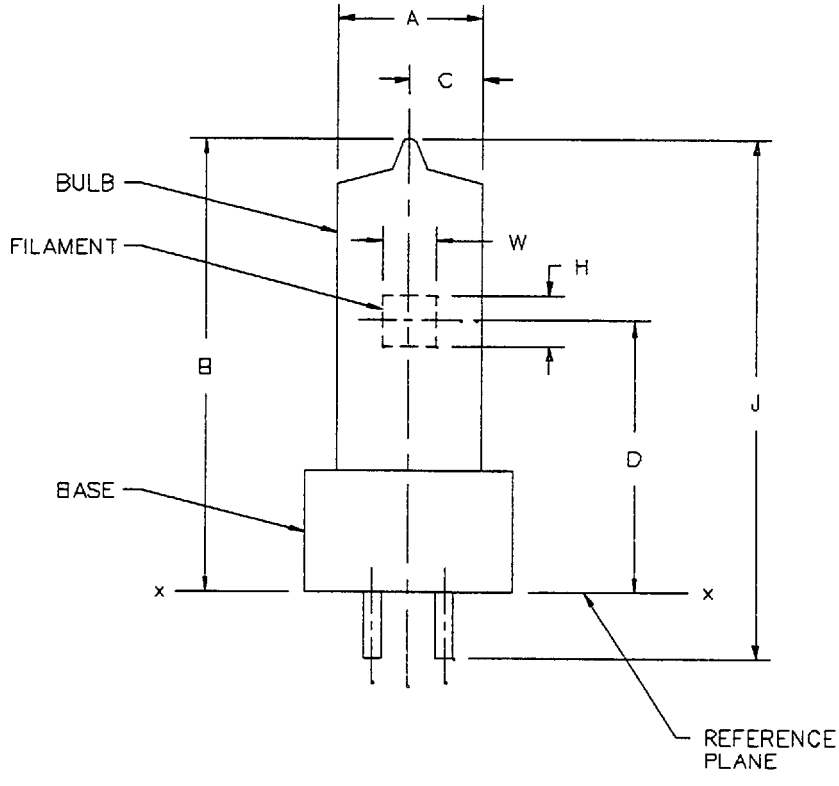

Dimensions		Bases	
A	Maximum		Referenced to
B	Maximum	IEC Designation	American National Standard
C	Maximum excursion	G5.3	ANSI C81.61
D	Basic light-center length	GY9.5	
H	Maximum	GZ9.5	
J	Maximum overall length	G9.5	
T	Maximum (see Section 8, item 8(d))	G22	
W	Maximum	G38	

Figure A8 – Two-pin base lamp

Copyright © 1997 by National Electrical Manufacturers Association
1300 North 17th Street, Suite 1847, Rosslyn, VA 22209

Copyright National Electrical Manufacturers Association
Provided by IHS under license with NEMA
No reproduction or networking permitted without license from IHS
Not for Resale

ANSI C78.370-1997
Revision of ANSI C78.370-1982 (R1995)

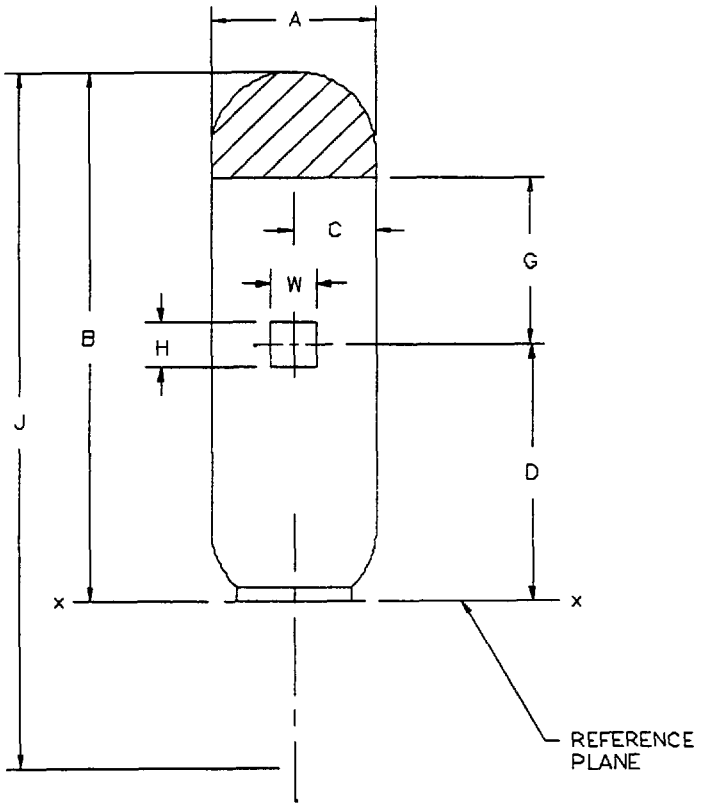

Dimensions	
A	Maximum
B	Maximum
C	Maximum excursion
D	Basic light-center length
G	Minimum
H	Maximum
J	Maximum overall length
T	Maximum (see Section 8, item 8(d))
W	Maximum

Bases	
	Referenced to
IEC Designation	American National Standard
BA9	ANSI C81.61
BA15	
E11	
E26s	
G17q	
GX17q	
P28/25	
P40/41	

See American National Standards
ANSI C78.1401 and ANSI C78.1406

Figure A9 – Miscellaneous metal shell base lamps and four-pin (non-reflector) base lamps

Copyright © 1997 by National Electrical Manufacturers Association
1300 North 17th Street, Suite 1847, Rosslyn, VA 22209
First Edition
December 1997

Copyright National Electrical Manufacturers Association
Provided by IHS under license with NEMA
No reproduction or networking permitted without license from IHS
Not for Resale

ANNEX B
(Normative)
Filament designations

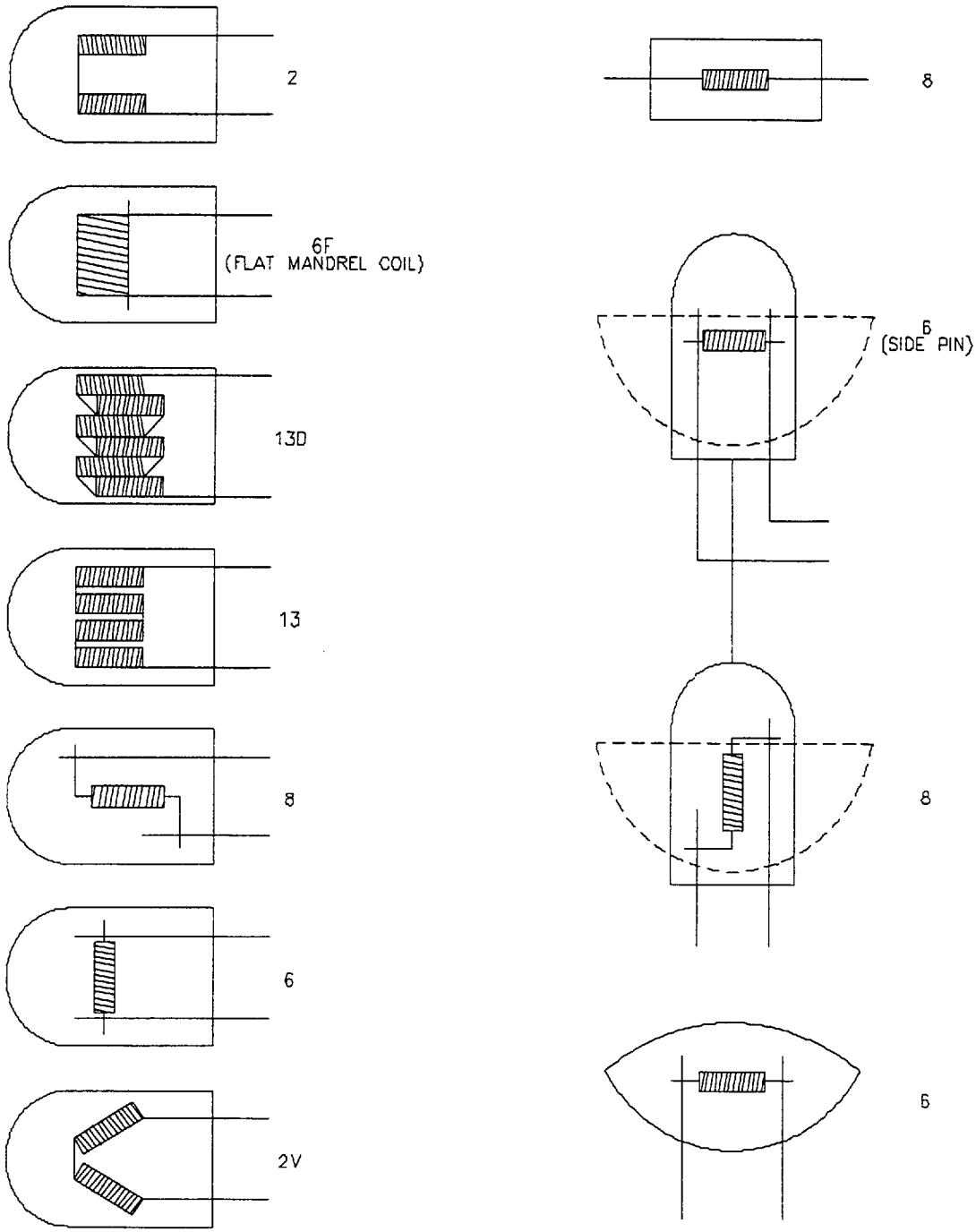

Copyright © 1997 by National Electrical Manufacturers Association
1300 North 17th Street, Suite 1847, Rosslyn, VA 22209

Copyright National Electrical Manufacturers Association
Provided by IHS under license with NEMA
No reproduction or networking permitted without license from IHS
Not for Resale

ANSI C78.370-1997
Revision of ANSI C78.370-1982 (R1995)

THIS PAGE INTENTIONALLY

LEFT BLANK

Copyright © 1997 by National Electrical Manufacturers Association
1300 North 17th Street, Suite 1847, Rosslyn, VA 22209

First Edition
December 1997

Copyright National Electrical Manufacturers Association
Provided by IHS under license with NEMA
No reproduction or networking permitted without license from IHS

Not for Resale

ANNEX C
(Normative)
Schematic optical projection layouts

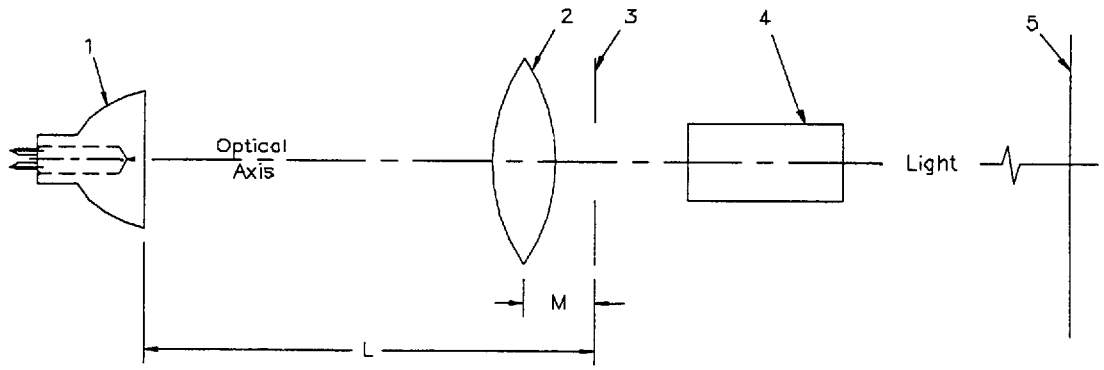

Component	Description
1	-----Lamp
2	Condenser Lens, Biconvex: Focal Length =
3	Film Plane: Aperture Size
4	Projection Lens: Focal Length = f/no = f/
5	Projected Image Plane: Image Size =

Reference	Nominal Dimension
L	
M	

Figure C1 – Condenser lens; biconvex

Copyright © 1997 by National Electrical Manufacturers Association
1300 North 17th Street, Suite 1847, Rosslyn, VA 22209

Copyright National Electrical Manufacturers Association
Provided by IHS under license with NEMA
No reproduction or networking permitted without license from IHS
Not for Resale

ANSI C78.370-1997
Revision of ANSI C78.370-1982 (R1995)

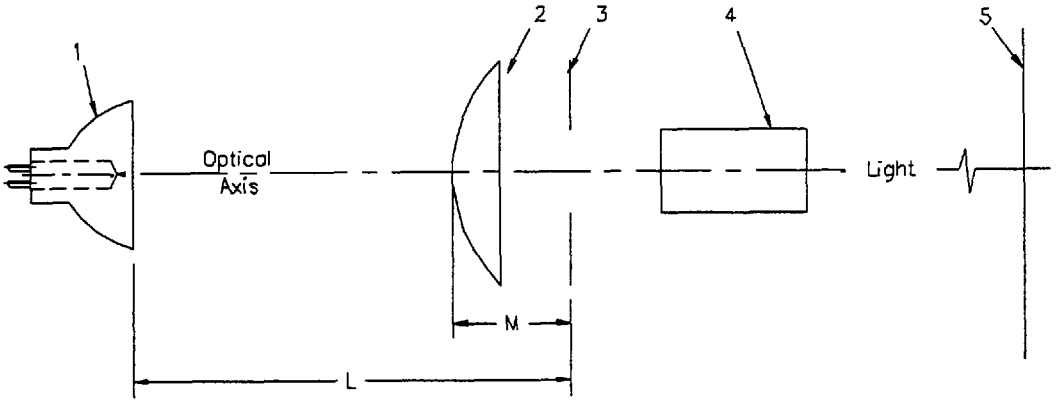

Component	Description
1	-----Lamp
2	Condenser Lens, Plano-convex: Focal Length =
3	Film Plane: Aperture Size
4	Projection Lens: Focal Length = f/no = f/
5	Projected Image Plane: Image Size =

Reference	Nominal Dimension
L	
M	

Figure C2– Condenser lens; plano-convex

Copyright © 1997 by National Electrical Manufacturers Association
1300 North 17th Street, Suite 1847, Rosslyn, VA 22209

First Edition
December 1997

Copyright National Electrical Manufacturers Association
Provided by IHS under license with NEMA
No reproduction or networking permitted without license from IHS
Not for Resale

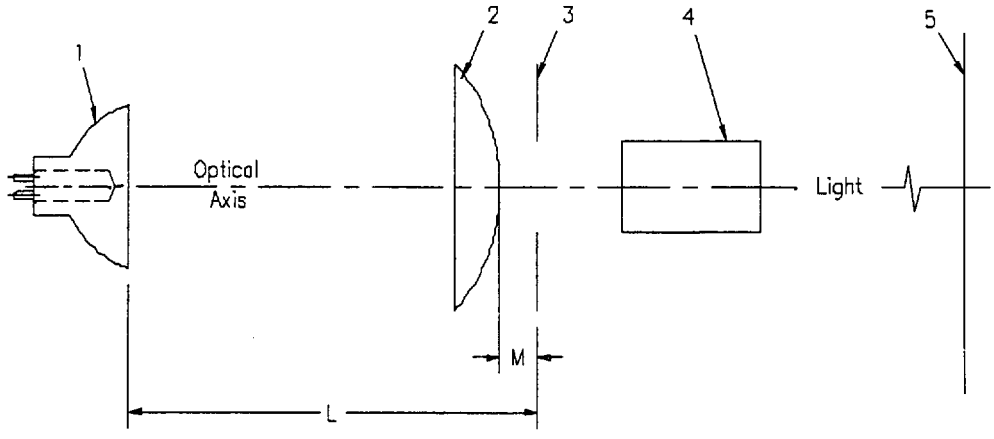

Component	Description
1	-----Lamp
2	Condenser Lens, Plano-convex: Focal Length =
3	Film Plane: Aperture Size
4	Projection Lens: Focal Length = f/no = f/
5	Projected Image Plane: Image Size =

Reference	Nominal Dimension
L	
M	

Figure C3 – Condenser lens; plano-convex

Copyright © 1997 by National Electrical Manufacturers Association
1300 North 17th Street, Suite 1847, Rosslyn, VA 22209

Copyright National Electrical Manufacturers Association
Provided by IHS under license with NEMA
No reproduction or networking permitted without license from IHS
Not for Resale

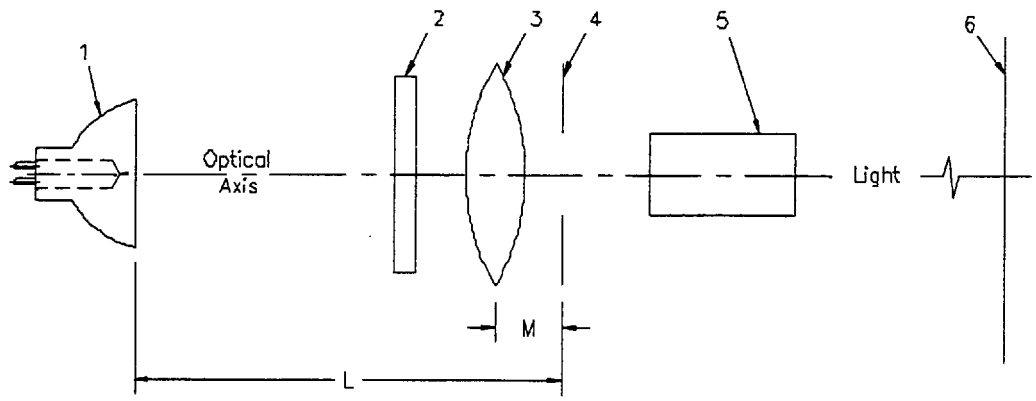

Component	Description
1	-----Lamp
2	Heat Absorbing Glass
3	Condenser Lens, Biconvex: Focal Length =
4	Film Plane: Aperture Size
5	Projection Lens: Focal Length = f/no = f/
6	Projected Image Plane: Image Size =

Reference	Nominal Dimension
L	
M	

Figure C4 – Condenser lens; biconvex with heat absorbing glass

Copyright © 1997 by National Electrical Manufacturers Association
1300 North 17th Street, Suite 1847, Rosslyn, VA 22209
First Edition
December 1997

Copyright National Electrical Manufacturers Association
Provided by IHS under license with NEMA
No reproduction or networking permitted without license from IHS
Not for Resale

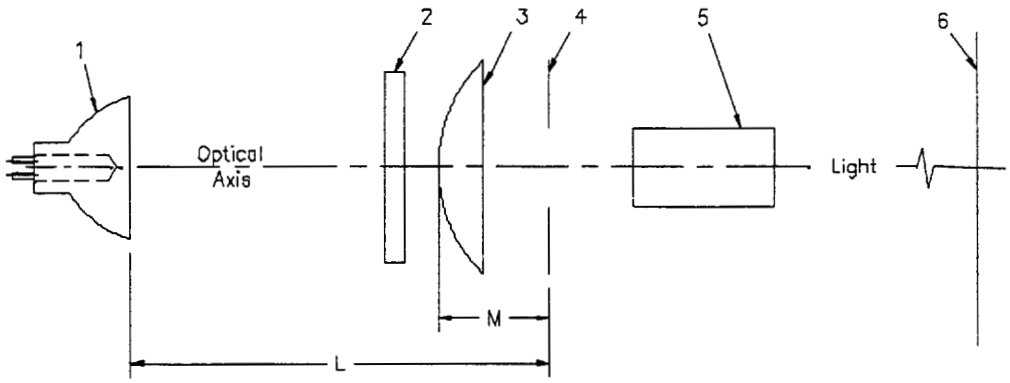

Component	Description
1	-----Lamp
2	Heat Absorbing Glass
3	Condenser Lens, Plano-convex: Focal Length =
4	Film Plane: Aperture Size
5	Projection Lens: Focal Length = f/no = f/
6	Projected Image Plane: Image Size =

Reference	Nominal Dimension
L	
M	

Figure C5 – Condenser lens; plano-convex with heat absorbing glass

Copyright © 1997 by National Electrical Manufacturers Association
1300 North 17th Street, Suite 1847, Rosslyn, VA 22209

Copyright National Electrical Manufacturers Association
Provided by IHS under license with NEMA
No reproduction or networking permitted without license from IHS
Not for Resale

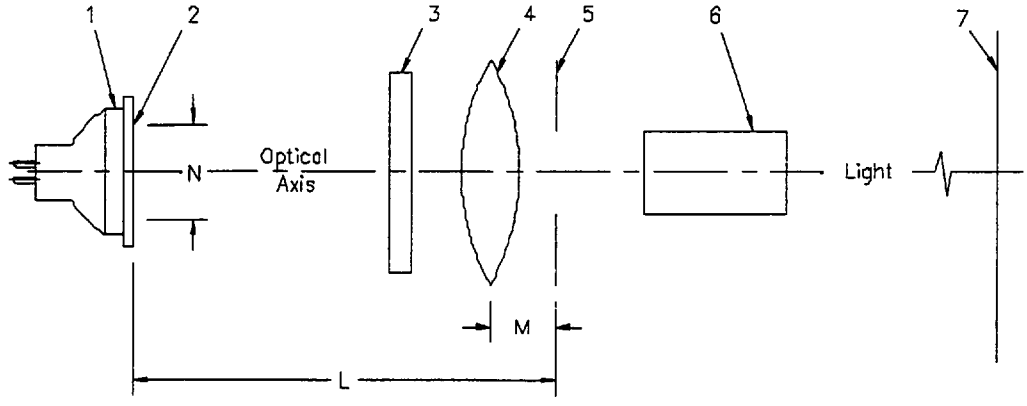

Component	Description
1	-----Lamp
2	Diaphragm
3	Heat Absorbing Glass
4	Condenser Lens, Biconvex: Focal Length =
5	Film Plane: Aperture Size =
6	Projection Lens: Focal Length = f/no = f/
7	Projected Image Plane: Image Size =

Reference	Nominal Dimension
L	
M	
N Diameter	

Figure C6 – Condenser lens; biconvex with heat absorbing glass

Copyright © 1997 by National Electrical Manufacturers Association
1300 North 17th Street, Suite 1847, Rosslyn, VA 22209
First Edition
December 1997

Copyright National Electrical Manufacturers Association
Provided by IHS under license with NEMA
No reproduction or networking permitted without license from IHS
Not for Resale

ANNEX D
(normative)
Photographic, Stage and Studio Lamp Designation Request Form

National Electrical Manufacturers Association
ATTN: Secretariat, Accredited Standard Committee C78
on Electric Lamps
1300 North 17th Street, Suite 1847
Rosslyn, VA 22209

APPLICANT: DO NOT COMPLETE

Date Assigned _____

Assigned Designation _____

PHOTOGRAPHIC, STAGE & STUDIO LAMP DESIGNATION REQUEST FORM

_____ Request for new designation
_____ Notification of alternate design not affecting interchangeability.*
_____ Notification of change in design. *
* Reason: _____

(* Fill in only the characteristics being changed. If no objections are received within 60 days, change will be permanent.)

All items shall be completed in accordance with American National Standard for Electric Lamps - Method of Designation for Electric Lamps - Photographic, Stage & Studio Lamps, (ANSI C78.370-1997)

LAMP CHARACTERISTICS

*1 (a) Service _____
(b) Projection Lens _____
(c) Condensing Lens _____
*2 Base _____
*3 (a) Bulb _____
* (b) Finish _____
(c) Material _____
(d) Top _____
*4 Reflector _____
(a) Location _____
(b) Functional Description _____
(c) Coating/finish _____
(d) Reference Position _____
5 Lens/Shield _____
*6 Operating Position _____
7 Ventilation _____
*8 (a) Filament _____
(b) W Maximum _____
(c) H Maximum _____
(d) T Maximum _____
9 Fuse _____
*10 Wattage _____
*11 Voltage _____
*12 Rated Life _____
*13 Sphere Lumens _____

14 (a) Drawing Reference from Appendix A _____
(b) A Maximum _____
(c) B Maximum _____
(d) C Maximum _____
* (e) D Basic LCL _____
(f) E Maximum _____
(g) F Basic Working Distance _____
(h) G Minimum _____
* (i) J MOL _____
(j) K _____
(k) R _____
15 (a) Layout Reference from Appendix C _____
(b) L Nominal _____
(c) M Nominal _____
(d) N Nominal Diameter _____
(e) Screen Lumens _____
(f) Corner/Center Ratio _____
*16 Correlated Color Temp. _____
17 Base Temp. _____
18 Seal Temp. _____
19 Bulb Temp. _____
20 Candlepower _____
21 Beam Spread _____
22 Special Data _____

* Key Characteristics

Copyright © 1997 by National Electrical Manufacturers Association
1300 North 17th Street, Suite 1847, Rosslyn, VA 22209

Copyright National Electrical Manufacturers Association
Provided by IHS under license with NEMA
No reproduction or networking permitted without license from IHS
Not for Resale

ANSI C78.370-1997
Revision of ANSI C78.370-1982 (R1995)

Lamp Manufacturer's Notes:

A. Circulation Request
   (1) Immediate_____
   (2) Delayed, Circulate on _____
B. Manufacturer believes this lamp is interchangeable with lamp designated
   _____
C. Submitted by:
   Manufacturer_____

   Address _____

   _____

Secretariat Action:

E. Designation Assigned_____
F. Application Rejected:
   (1) Incomplete_____
   (2) Request same as _____
G. Acknowledgment only _____
Request similar to designation_____

Initials _____ Date _____

CAUTION: The lamp characteristics given in this form have not been approved by the American National Standards Institute and do not constitute an American National Standard.

Note: Attach one letter-sized lamp drawing to this request. Submit the request in duplicate. It is suggested that a copy be retained for your files.

Copyright © 1997 by National Electrical Manufacturers Association
1300 North 17th Street, Suite 1847, Rosslyn, VA 22209
First Edition
December 1997

Copyright National Electrical Manufacturers Association
Provided by IHS under license with NEMA
No reproduction or networking permitted without license from IHS
Not for Resale

ANNEX E
(Informative)
Bibliography

C81.62-1991 (R1996)	*American National Standard for Lampholders for Electric Lamps*
C81.63-1991 (R1996)	*American National Standard for Gauges for Electric Lamp Bases and Lampholders*
C78.379-1991 (R1994)	*American National Standard for Electric Lamps, Reflector Lamps - Classification of Beam Patterns*

Copyright © 1997 by National Electrical Manufacturers Association
1300 North 17th Street, Suite 1847, Rosslyn, VA 22209

Copyright National Electrical Manufacturers Association
Provided by IHS under license with NEMA
No reproduction or networking permitted without license from IHS
Not for Resale

ANSI C78.370-1997
Revision of ANSI C78.370-1982 (R1995)

THIS PAGE INTENTIONALLY

LEFT BLANK

Copyright © 1997 by National Electrical Manufacturers Association
1300 North 17th Street, Suite 1847, Rosslyn, VA 22209

First Edition
December 1997

Copyright National Electrical Manufacturers Association
Provided by IHS under license with NEMA
No reproduction or networking permitted without license from IHS

Not for Resale