ANSI C78.25 91 ■ 0724150 0032010 9 ■

American National Standard

for Electric Lamps –

Lamp-Base Temperature Rise – Method of Measurement

ANSI C78.25-1991

ANSI American National Standards Institute
11 West 42nd Street
New York, New York
10036

Copyright National Electrical Manufacturers Association
Provided by IHS under license with NEMA
No reproduction or networking permitted without license from IHS

Not for Resale

American National Standard

Approval of an American National Standard requires verification by ANSI that the requirements for due process, consensus, and other criteria for approval have been met by the standards developer.

Consensus is established when, in the judgment of the ANSI Board of Standards Review, substantial agreement has been reached by directly and materially affected interests. Substantial agreement means much more than a simple majority, but not necessarily unanimity. Consensus requires that all views and objections be considered, and that a concerted effort be made toward their resolution.

The use of American National Standards is completely voluntary; their existence does not in any respect preclude anyone, whether he has approved the standards or not, from manufacturing, marketing, purchasing, or using products, processes, or procedures not conforming to the standards.

The American National Standards Institute does not develop standards and will in no circumstances give an interpretation of any American National Standard. Moreover, no person shall have the right or authority to issue an interpretation of an American National Standard in the name of the American National Standards Institute. Requests for interpretations should be addressed to the secretariat or sponsor whose name appears on the title page of this standard.

CAUTION NOTICE: This American National Standard may be revised or withdrawn at any time. The procedures of the American National Standards Institute require that action be taken periodically to reaffirm, revise, or withdraw this standard. Purchasers of American National Standards may receive current information on all standards by calling or writing the American National Standards Institute.

Published by

American National Standards Institute
11 West 42nd Street, New York, New York 10036

Copyright © 1991 by the American National Standards Institute
All rights reserved.

No part of this publication may be reproduced in any form, in an electronic retrieval system or otherwise, without prior written permission of the publisher.

Printed in the United States of America

APS4C1191/18

Copyright National Electrical Manufacturers Association
Provided by IHS under license with NEMA
No reproduction or networking permitted without license from IHS
Not for Resale

ANSI®
C78.25-1991
Revision of
ANSI C78.25-1983

American National Standard
for Electric Lamps –

Lamp-Base Temperature Rise – Method of Measurement

Secretariat

National Electrical Manufacturers Association

Approved February 26, 1991

American National Standards Institute, Inc.

Copyright National Electrical Manufacturers Association
Provided by IHS under license with NEMA
No reproduction or networking permitted without license from IHS

Not for Resale

Contents

Page

Foreword iii

0 Introduction 1

1 General 1

2 Definitions 1

3 General conditions for measurements 1

4 Test enclosure 2

5 Test lampholders 3

6 Thermocouple 5

7 Assembly of lamp and test lampholder in enclosure 5

8 Measurement of temperature rise 6

9 Test lampholder 6

Figures

1 Test lampholder parts and fit for typical Edison screw-based lamp 4

2 Position of test lampholders and thermocouple 4

3 Dimensions of test lampholders for various Edison screw-based lamps 7

Copyright National Electrical Manufacturers Association
Provided by IHS under license with NEMA
No reproduction or networking permitted without license from IHS
Not for Resale

Foreword (This foreword is not part of American National Standard C78.25-1991.)

This standard was developed by Subcommittee C78-1 on Incandescent Lamps of the Accredited Standards Committee on Electrical Lamps, C78. Since 1974, the subcommittee spent considerable time working in conjunction with the International Electrotechnical Commission (IEC) to revise its Standard Method of Measurement of Lamp Cap Temperature Rise, IEC 360. The result is that the two standards closely parallel one another.

The revisions to the 1983 version reflected herein include an expansion of 3.2 on Supply Voltage to include lamps that operate from ballasts and a clarification of the position of the thermocouple in figure 1 as well as some editorial changes to align with IEC 360.

Suggestions for improvement of this standard will be welcome. They should be sent to the National Electrical Manufacturers Association, 2101 L Street, NW, Suite 300, Washington, DC 20037.

This standard was processed and approved for submittal to ANSI by the Accredited Standards Committee on Electric Lamps, C78. Committee approval of the standard does not necessarily imply that all committee members voted for its approval. At the time it approved this standard, the C57 Committee had the following members:

Ted A. Pickett, Chairman
Alfred C. Rousseau, Vice-Chairman
Vicki Schofield, Secretary

Organization Represented	*Name of Representative*
Advance Transformer Company	Norm Grimshaw
Duro-Test Corporation	Herbert S. Strauss
ETL Testing Laboratories	Anthony DiNiro
General Electric Company	Ted A. Pickett
GTE Products Corporation	Robert P. Bonazoli
	Kendrick D. Rattray (Alt.)
Illuminating Engineering Society	Melvin Unglert
	J.E. Kaufman (Alt.)
National Electrical Manufacturers Association	Harry R. Lobdell
	W.H. Henshaw, Jr. (Alt.)
OSRAM Corporation	Peter A. Bleasby
Philips Lighting Company	Alfred C. Rousseau
Underwriters Laboratories	Kevin Kanakos
Wilger Liaison Company, Inc.	Gerald M. Plank, Jr.

Subcommittee C78-1 on Incandescent Lamps, which developed this standard, had the following members:

William A. Murray, Chairman
Vicki Schofield, Secretary

Francis A. Beane
Vernon L. Beswick
Peter A. Bleasby
David Fox
Chet Gorzelanczyk
Edward E. Hinde
Paul Johnson
Michael J. Kosik
William A. Murray
Ted. A. Pickett
Dave Puckett
Herbert Strauss
Ted Yahraus

Copyright National Electrical Manufacturers Association
Provided by IHS under license with NEMA
No reproduction or networking permitted without license from IHS
Not for Resale

American National Standard for Electric Lamps –

Lamp-Base Temperature Rise – Method of Measurement

0 Introduction

The temperature rise of the lamp base of a tungsten filament lamp is, in practice, very dependent on the mounting of the lamp and the condition of the base. For this reason, it has been necessary to define a method of measurement based on the use of a standard test lampholder. The temperature rise Δt_s measured on the standard test lampholder is then taken as the temperature rise of the lamp base for the purpose of this standard.

Compared with the measurement of the temperature rise of the bare lamp base, the measurement of the temperature rise of a standard test lampholder has the following advantages:

– A better approximation to actual operating conditions;

– Improved reproducibility, as there is less influence from lamp base material, finish, and surface conditions (which also have little influence in actual operating conditions);

– Leveling (or averaging) of the temperatures of various parts of the base, giving a better overall picture of the heat transferred from the lamp to the luminaire;

– Reduction in time necessary to make measurements, as the thermocouple is permanently fixed to the test lampholder.

1 General

1.1 Objective

This standard describes the method of measurement of lamp-base temperature rise that shall be used when testing lamps for compliance with the temperature rise limits given for each particular type of lamp in various American National Standards on lamps in the C78 series.

1.2 Scope

This standard covers the method of test and the specifications for test lampholders for lamps for domestic and general lighting service fitted with E12 candelabra, E17 intermediate, E26 medium, E26d double-contact medium, E26/50 × 39 skirted medium, and E39 mogul screw bases.

This standard is essentially equivalent to IEC Publication 360, *Standard method of measurement of lamp cap temperature rise.*

2 Definitions

2.1 temperature rise of base: The surface temperature rise of a standard test lampholder fitted to the lamp base, when measured under conditions specified in this standard.

2.2 equilibrium temperature: The steady state temperature, within ±1°C, of a standard test lampholder reached after a sufficient lamp burning time.

3 General conditions for measurements

3.1 Aging and stabilizing

For these measurements, no previous aging of the lamp is required. Sufficient stability of the lamp is achieved during the time necessary to reach thermal equilibrium in the test enclosure.

Copyright National Electrical Manufacturers Association
Provided by IHS under license with NEMA
No reproduction or networking permitted without license from IHS
Not for Resale

3.2 Supply voltage

3.2.1 Unless otherwise specified in a particular lamp standard, for lamps intended to be connected directly to the supply, measurements shall be made on lamps operating at rated voltage, while the supply voltage is maintained constant within ±0.5%. Lamps marked with a range voltage rating, such as 115–125 volts, shall be tested at the upper limit of their range.

3.2.2 For lamps intended to be connected to the supply through a transformer or ballast, measurements shall be made at the rated voltage of the ballast unless otherwise specified in a particular lamp standard. The supply voltage shall be maintained constant within ±0.5%. Measurements shall be made using a reference ballast or a production ballast that at the calibration current has an impedance within ±1% of the reference ballast.

3.3 Ambient and reference temperatures

The reference temperature for defining base temperature rise is 25°C. The measurements, therefore, should be made at an ambient temperature of 25°C. Considering the practical case, however, the measurement shall be made at a temperature within the ambient temperature range of 15°C–40°C. Measurements shall be made at a constant ambient temperature. The test enclosure described in clause 4 is designed to maintain the ambient temperature at a sufficiently constant value.

If the temperature in the test enclosure differs from 25°C, the measured value Δt_m shall be converted to a temperature rise relevant to an ambient of 25°C in accordance with the following formula:

$$\Delta t_{25} = \Delta t_m + 1/3\ (t_{amb} - 25)\ \left(\frac{\Delta t_m}{100}\right)^{1/2}$$

where

Δt_{25} is the temperature rise corrected to 25°C reference;

Δt_m is the difference between the final equilibrium temperature and the ambient temperature, $t_m - t_{amb}$;

t_{amb} is the actual ambient air temperature in the test enclosure at the end of the test run.

This formula is valid for any ambient temperature between 15°C and 40°C.

4 Test enclosure

4.1 Cabinet requirements

Temperature measurements shall be made in a draft-free test enclosure. For this purpose, a rectangular, perforated metal cabinet shall be used, the top and at least three sides of which are double-walled. The fourth side may be the same as the other walls or it may be solid. The gap between the inner and outer walls shall be approximately 150 mm. The bottom of the cabinet shall be solid.

The double walls shall be made of perforated sheet metal with a matt surface. The maximum diameter of the holes shall be 2 mm and the area of the apertures shall be approximately 40% of the total wall area.

The dimensions of the enclosure shall be such that ambient temperature within the test enclosure will not exceed 40°C while the test is being run. To achieve this condition, the internal size of the enclosure should be not less than 900 mm × 900 mm × 900 mm. The dimensions of the enclosure shall be such that there is a clearance of at least 200 mm between any part of the lamp and the inside of the enclosure.[1)]

The internal ambient temperature shall be measured with a thermometer screened from direct radiation from the test lamp. The thermometer shall be placed level with the lamp about halfway between lamp and wall.

4.2 Suspension methods

The standard measurement position shall be base up unless another burning position is specified for the relevant lamp. The suspension of the lamp shall not affect air convection around the lamp in any adverse manner.

---

1) For routine measurements under nonlaboratory conditions, a smaller enclosure of 500 mm × 500 mm × 500 mm may be used, providing the internal ambient temperature does not exceed 40°C during measuring, with the lamp mounted in the center of the enclosure.

Copyright National Electrical Manufacturers Association
Provided by IHS under license with NEMA
No reproduction or networking permitted without license from IHS
Not for Resale

4.2.1 Base-up position

Unless otherwise specified, the primary measurement position of a lamp shall be base-up, with the test lamp assembled in the test lampholder (see clause 7) and suspended from the top of the cabinet directly by the supply leads.

4.2.2 Base-down position

When lamps are measured in the base-down position, a bulb supporting system attached to the cabinet is required. This consists of three equally spaced points that are intended to support a lamp bulb in the transition area between the major outer diameter and the neck.

– The support points shall be at least 5 mm away from the base;

– The material of the support points shall be a suitable thermal insulating material;

– The area of a point that contacts the lamp bulb should be kept as small as possible to minimize heat loss errors;

– For base-down suspension of tubular lamps, spring loading of the contact points will be necessary to provide a holding force.

5 Test lampholders

5.1 General construction

Test lampholders consisting of a metallic sleeve fitted with a thermocouple have been standardized for lamps provided with various types of bases. Detailed size and shape specifications for various test lampholders are given in clause 9 (figure 3).

In general, each test lampholder shall have a permanently attached stranded flexible copper wire to serve as one of the power supply leads. A thermocouple shall also be permanently attached to the lampholder sleeve. The other power supply lead shall be attached to the eyelet of the base of the test lamp. In addition, a spring wire shall be used around the outside of the sleeve to ensure good physical contact between the sleeve and the lamp's base. See Figure 1 for the general construction features and assembled position of a lampholder for an Edison screw base.

5.2 Sleeve material

5.2.1 Composition

Nickel + Cobalt – 99.5% min

Cobalt – 0.5% max

Sulphur – 0.005% max

Zinc – 0.005% max

5.2.2 Structure and properties

The material should be finely grained and of regular structure. Grain size shall be ASTM 8 minimum (approximately 0.019 mm maximum). Vickers hardness shall be 135 ± 15.

5.2.3 Thickness

The thickness shall be 0.5 mm ± 0.02 mm.

5.2.4 Quality and finish

The material shall be uniform in composition and properties. Strip shall be rolled smooth, with a clean bright surface. It shall be cut straight and be free from kinks, waviness, dents, inclusions, lubricants, and other defects.

5.2.5 Source of supply

At the time of the drafting of this standard, material obtained from the following source, or any equivalent, is satisfactory:

Vakuumschmeltze G.m.b.H.
Postfach 2253
6450 Hanau
Germany

5.3 Spring material

The material shall be spring steel wire (material specification number is to be determined). The diameter shall be approximately 0.8 mm. The length shall be approximately 1-1/2 turns around the sleeve.

5.4 Supply conductors

Material: Copper

Size: 0.56 mm^2 to 0.71 mm^2 effective cross-sectional area (this is equivalent to a diameter range of 0.85 mm to 0.95 mm for solid conductors). The closest American wire size is 19 AWG. If unavailable, the recommended alternative is 18 AWG.

Length: Approximately 110 mm

Copyright National Electrical Manufacturers Association
Provided by IHS under license with NEMA
No reproduction or networking permitted without license from IHS
Not for Resale

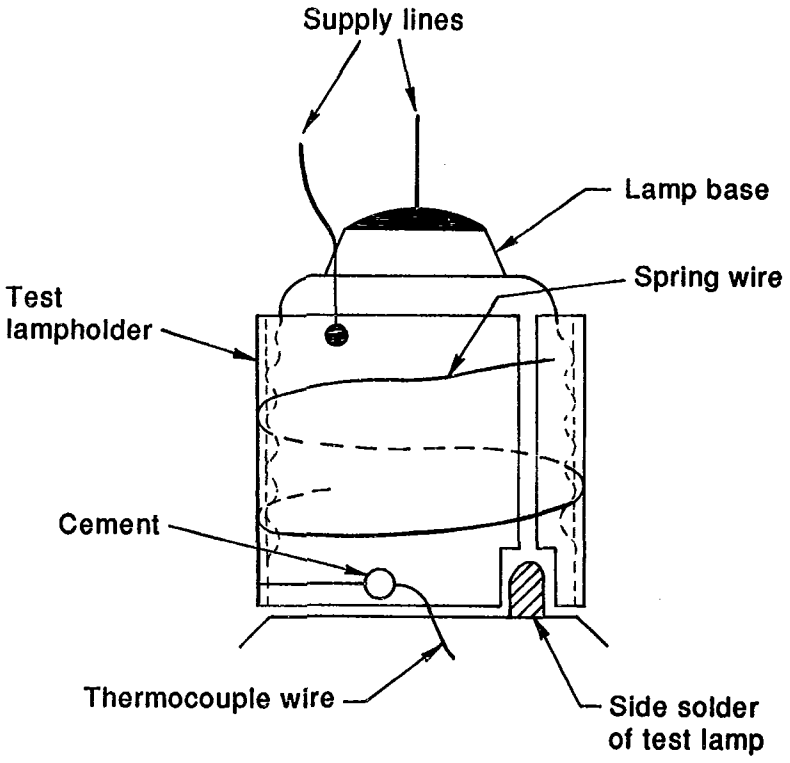

Figure 1 – Test lampholder parts and fit for typical Edison screw-based lamp

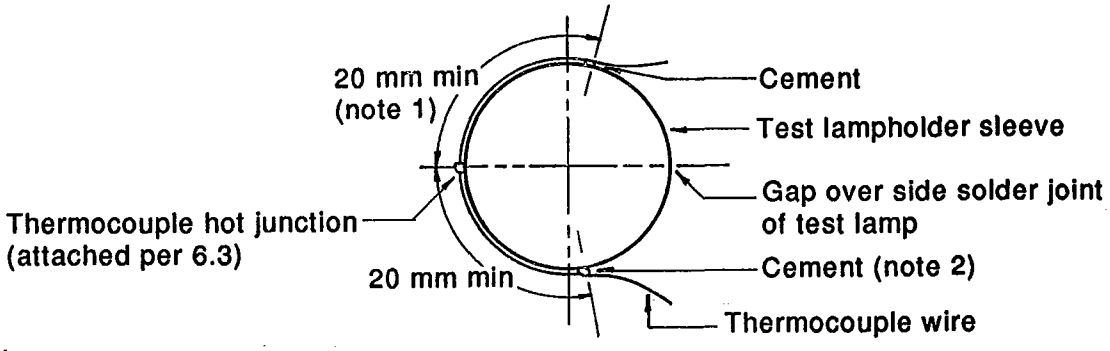

NOTES

1 For test holders 15 mm in diameter and smaller, a compromise must be made in the minimum lead stretching distance to avoid placing the leads and cement joints too close to the gap of the holder.

2 A suitable cement consists of one part by weight of sodium silicate and two parts by weight of powdered talc.

Figure 2 – Position of test lampholders and thermocouple (spring not shown)

Copyright National Electrical Manufacturers Association
Provided by IHS under license with NEMA
No reproduction or networking permitted without license from IHS
Not for Resale

The wire attached to the center (eyelet) contact shall be solid and attached by solder.

The stranded wire attached to the test lampholder shall be connected to the neutral of the supply.

6 Thermocouple

6.1 Material

The materials recommended for the thermocouple are NiCr/NiAl (Chromel/Alumel, Type K or Iron/Constantan, Type J). The size of the wires shall be sufficiently thin, so as not to influence the temperature of the test lampholder. The maximum thickness of the wire shall be 200 µm (8 mils, 32 AWG). The wires shall be provided with an insulating outer layer (enamel, heat-resisting sheathing, etc.).

6.2 Junction

The following method is recommended for making the junction of the two thermocouple wires.

After the ends of the wires have been stripped of their insulation, the two wires shall be set on end at an angle of approximately 150° and butt-welded. Any projecting leads shall be cut off close to the weld and by pulling the wires taut by hand they will form in line at the junction.

6.3 Attachment to lampholder sleeve

The thermocouple's hot junction shall be attached to the test lampholder by means of a minimum of solder, so that it is in direct mechanical contact with the lampholder. The thermocouple junction shall be located diametrically opposite the lampholder slot and 1 mm to 2 mm from the bottom edge. (See figures 1 and 2.) The use of a cement at the hot junction is deprecated. The wires shall be insulated right up to the junction. The two leads shall then be stretched parallel to the edge along the lampholder over at least 20 mm (if feasible)[2] at which point the leads shall be secured with a small amount of cement.[3]

6.4 Equipment

The thermo-electromotive force in the thermocouple circuit shall be measured with the aid of a compensating device. The temperature- or millivolt-indicating equipment shall be calibrated to be accurate within ±0.5%.

6.5 Calibration

The thermocouple shall be calibrated at fixed points, namely, the boiling point of water and the solidification point of tin, lead, and zinc.[4]

If it is desired to calibrate the thermocouple after it has been mounted on the sleeve, only the boiling point of water should be used (in order to avoid melting the solder).

7 Assembly of lamp and test lampholder in enclosure

The test lampholder shall be pushed onto the test lamp's base, up to the rim of the base. See figure 1 for the typical relationship of the lampholder and lamp. Note that for screw bases, the orientation of the lampholder with respect to the base is determined by the side solder knot. If the test lampholder is used on skirted bases (such as E26/50 × 39 medium skirted), the rim of the lampholder sleeve shall be located in the same plane as the borderline between the base's screw shell and its insulator (shell-to-skirt insulator).

Double-contact based lamps shall have two solid copper wires of approximately 1 mm in diameter by 110 mm long, soldered to the contacts of the base. Lamps with single-con-

---

[2] For test holders 15 mm in diameter and smaller, a compromise must be made in the minimum lead stretching distance to avoid placing the leads and cement joints too close to the gap of the holder.

[3] A suitable cement consists of one part by weight of sodium silicate and two parts by weight of powdered talc.

[4] Correct procedures for calibration can be found in: National Physical Laboratory (NPL) Notes on Applied Science No. 12: *Calibration of temperature measuring instrument.* H.M.S.O., London; 1964, 3rd ed. NBS Circular No. 590: *Methods of testing thermocouples and thermocouple materials,* National Bureau of Standards, Washington, D.C.; 1958.

Copyright National Electrical Manufacturers Association
Provided by IHS under license with NEMA
No reproduction or networking permitted without license from IHS
Not for Resale

tact bases shall have a solid copper wire of approximately 1 mm in diameter by 110 mm long, soldered to the center contact of the lamp. The stranded copper wire attached to the test lampholder shall be connected to the neutral of the power supply.

For base-up measurements, the lamp shall be suspended with its base up in the approximate center of the enclosure for measurements. It is very important that the lamp be suspended with its axis as nearly vertical as possible. For suspension and connection to the power supply, it is recommended to use an arrangement adjustable in the vertical direction mounted on the ceiling of the enclosure, so that the lamp can be placed approximately in the center of the enclosure.

For base-down measurement, a special support fixture shall be used (see 4.2.2). The assembled test lamp with test lampholder shall be placed in the fixture and the fixture shall be positioned so that the lamp is approximately in the center of the enclosure.

8 Measurement of temperature rise

The minimum burning time for each lamp before measurement shall be 30 minutes. Then, the operator has the option to make a series of trial measurements to verify that the temperature is no longer on a rising pattern. When the equilibrium temperature (thermal equilibrium) has been reached, the test lampholder temperature and the ambient temperature shall be read and recorded. The measurement results for individual lamps shall be rounded off to the closest 1°C. Then, a calculation of base temperature rise shall be made, using the correction equation shown in 3.3, if necessary.

CAUTION – Exposed live parts are present within the test enclosure, during the measurement cycle. Use due caution.

9 Test lampholder dimensions

Detailed dimensions of the test lampholders for use with particular bases are provided in figure 3.

Copyright National Electrical Manufacturers Association
Provided by IHS under license with NEMA
No reproduction or networking permitted without license from IHS

Not for Resale

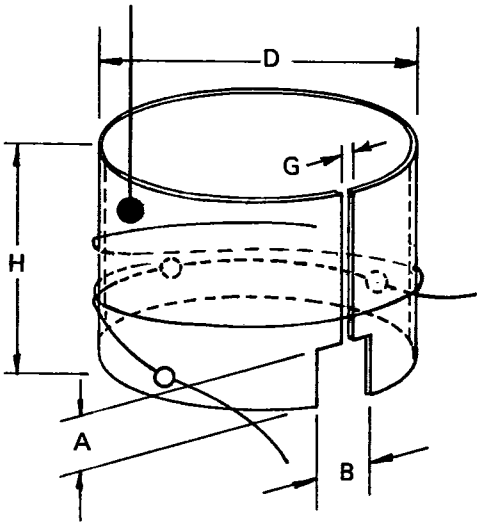

Approximate values (millimeters)				
Dimension	Candelabra E12	Inter-mediate E17	Medium E26/50 × 39, E26, E26d	Mogul E39
A	4	4	5	8
B	5	5	6	10
D (Note 1)	11.4	16	26	39
G (Note 2)	–	–	–	–
H	13.9	16	20	35

NOTES

1 Inside diameter should allow the holder to be clamped on the base by spring action.

2 The width of the slit shall be 2 mm ± 1.5 mm when the test lampholder is mounted on the lamp.

Figure 3 – Dimensions of test lampholders for various Edison screw-based lamps

Copyright National Electrical Manufacturers Association
Provided by IHS under license with NEMA
No reproduction or networking permitted without license from IHS
Not for Resale