ANSI C78.24-1995

American National Standard

for electric lamps - two-inch (51-mm) integral-reflector lamps with front covers and GU5.3 or GX5.3 bases

Approved March 10, 1995

Secretariat: National Electrical Manufacturers Association

1 Scope

This standard specifies the detailed lamp dimensions for those lamps in the family of two-inch (51-mm) integral-reflector lamps with GU5.3 or GX5.3 bases and front covers. These lamps are intended for use in general lighting applications.

An American National Standard implies a consensus of those substantially concerned with its scope and provisions. An American National Standard is intended as a guide to aid the manufacturer, the consumer, and the general public. The existence of an American National Standard does not in any respect preclude anyone, whether he has approved the standard or not, from manufacturing, marketing, purchasing, or using products, processes, or procedures not conforming to the standard. American National Standards are subject to periodic review and users are cautioned to obtain the latest editions.

The American National Standards Institute does not develop standards and will in no circumstances give an interpretation of any American National Standard. Moreover, no person shall have the right or authority to issue an interpretation of an American National Standard in the name of the American National Standards Institute.

CAUTION NOTICE: This American National Standard may be revised or withdrawn at any time. The procedures of the American National Standards Institute require that action be taken to reaffirm, revise, or withdraw this standard no later than five years from the date of approval. Purchasers of American National Standards may receive current information on all standards by calling or writing the American National Standards Institute.

Copyright © 1995 by the National Electrical Manufacturers Association
2101 L Street, N.W., Suite 300, Washington, D.C. 20037

Copyright National Electrical Manufacturers Association
Provided by IHS under license with NEMA
No reproduction or networking permitted without license from IHS

Not for Resale

2 Normative references

The following standards contain provisions which, through reference in this text, constitute provisions of this American National Standard. At the time of publication, the editions indicated were valid. All standards are subject to revision, and parties to agreements based on this American National Standard are encouraged to investigate the possibility of applying the most recent editions of the standards indicated below.

ANSI C78.1413-1989(R1994), *American National Standard for Electric Lamps – Two-Inch (51mm) Integral-Reflector - Rim Reference Projection Lamps – Dimensions of Centering Systems*

ANSI C81.61-1990, *American National Standard for Electric Lamp Bases*

ANSI C81.63-1991, *American National Standard for Electric Lamp Bases and Lampholder Gauges*

3 Lamp dimensions

Lamp dimensions are specified in Figure 1. Only those dimensions essential to interchangeability are given. The drawn shape of the reflector and neck area are not intended to specify or restrict the outer surface of the lamp, beyond the restrictions imposed by the standard for the base, ANSI C81.61.

Dimensions of the subject lamps with front covers differ from those similar lamps without front covers that are specified in ANSI C78.1413. For the intended application of the subject lamps, there is no need for a highly precise rim.

Lamps of the subject type shall employ standardized bases GU5.3 or GX5.3. For details see ANSI C81.61. Compliance shall be checked by the relevant gauges of ANSI C81.63.

Copyright National Electrical Manufacturers Association
Provided by IHS under license with NEMA
No reproduction or networking permitted without license from IHS Not for Resale

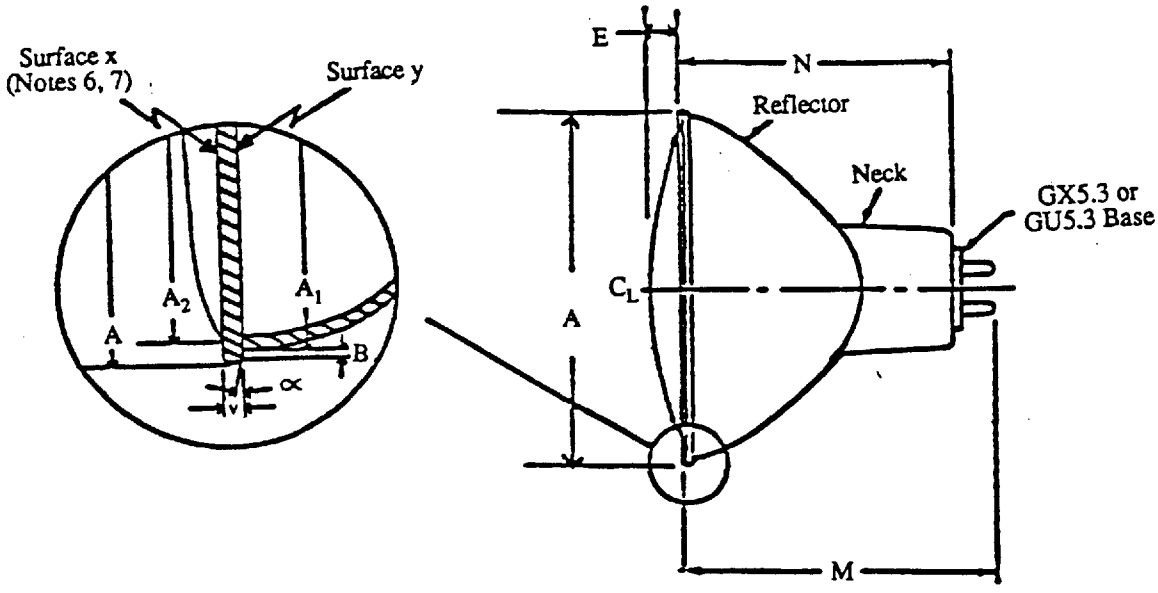

NOTE: The drawing is intended to show the dimensions to be controlled.

Figure 1 – Lamp dimensions

Reference	Standard Dimensions (Inches)			Nearest Metric Equivalent (millimeters)		
	Min	Nom	Max	Min	Nom	Max
A (Notes 1,2)	–	–	1.966	–	–	50.7
A_1	–	1.89	–	–	48.0	–
A_2	–	–	1.89	–	–	48.0
B	0.012	–	–	0.3	–	–
E	–	–	0.177	–	–	4.5
M	–	–	1.811	–	–	46.0
N (Note 4)	1.410	–	1.512	35.8	–	38.4
V (Note 5)	0.070	–	0.094	1.8	–	2.4
α	–	–	17°	–	–	17°

NOTES

1 Allowable maximum diameter including mold flash out-of-roundness.

2 Dimensions A, A_1 and A_2 are diameters.

3 Dimension A_1 indicates the inner diameter of the surface y which has a minimum width of B and can be inclined up to an angle of α.

4 The undefined areas bounded by dimension N may vary from the contour shown to accommodate variations in reflector design.

5 Dimension V is measured at diameter A_1.

6 Surface x can be used to position the lamp and when so used should mate firmly with any rim-centering device to obtain proper optical alignment and for GX5.3 based lamps to obtain the essential lamp retention function.

7 Surface x is defined by the annulus formed by the difference between diameters A and A_2.

Copyright National Electrical Manufacturers Association
Provided by IHS under license with NEMA
No reproduction or networking permitted without license from IHS Not for Resale

Annex A
(Informative)
Bibliography

ANSI C78.379-1994, *American National Standard for Electric Lamps – Reflector Lamps – Classification of Beam Patterns*

ANSI C81.62-1991, *American National Standard for Electric Lamp Holders*

Copyright National Electrical Manufacturers Association
Provided by IHS under license with NEMA
No reproduction or networking permitted without license from IHS
Not for Resale