American National Standard

ANSI C78.23-1995

American National Standard for Incandescent Lamps—Miscellaneous Types

National Electrical Manufacturers Association
1300 North 17th Street
Suite 1847
Rosslyn, VA 22209
(703) 841-3200

American National Standard

Copyright National Electrical Manufacturers Association
Provided by IHS under license with NEMA
No reproduction or networking permitted without license from IHS

Not for Resale

NEMA C78.23 95 ■ 6470247 0507246 128 ■

ANSI® C78.23-1995

AMERICAN NATIONAL STANDARD

for Incandescent Lamps—Miscellaneous Types

Secretariat
National Electrical Manufacturers Association

Approved January 12, 1995
American National Standards Institute, Inc.

Copyright National Electrical Manufacturers Association
Provided by IHS under license with NEMA
No reproduction or networking permitted without license from IHS

Not for Resale

American National Standard

Approval of an American National Standard requires verification by ANSI that the requirements for due process, consensus, and other criteria for approval have been met by the standards developer.

Consensus is established when, in the judgment of the ANSI Board of Standards Review, substantial agreement has been reached by directly and materially affected interests. Substantial agreement means much more than a simple majority, but not necessarily unanimity. Consensus requires that all views and objections be considered, and that a concerted effort be made toward their resolution.

The use of American National Standards is completely voluntary; their existence does not in any respect preclude anyone, whether he has approved the standards or not, from manufacturing, marketing, purchasing, or using products, processes, or procedures not conforming to the standards.

The American National Standards Institute does not develop standards and will in no circumstances give an interpretation of any American National Standard. Moreover, no person shall have the right or authority to issue an interpretation of an American National Standard in the name of the American National Standards Institute. Requests for interpretations should be addressed to the secretariat or sponsor whose name appears on the title page of this standard.

CAUTION NOTICE: This American National Standard may be revised or withdrawn at any time. The procedures of the American National Standards Institute require that action be taken periodically to reaffirm, revise, or withdraw this standard. Purchasers of American National Standards may receive current information on all standards by calling or writing the American National Standards Institute.

Published by

National Electrical Manufacturers Association
1300 North 17th Street, Suite 1847, Rosslyn, VA 22209

Copyright © 1996 National Electrical Manufacturers Association
All rights reserved.

No part of this publication may be reproduced in any form, in an electronic retrieval system or otherwise, without prior written permission of the publisher.

Printed in the United States of America

Copyright National Electrical Manufacturers Association
Provided by IHS under license with NEMA
No reproduction or networking permitted without license from IHS

Not for Resale

CONTENTS

Page

Forward ii

Part I – General Information 1

Part II – Lamp classes 7

Part III – Lamp space drawings 11

Part IV – Annexes 17

Copyright National Electrical Manufacturers Association
Provided by IHS under license with NEMA
No reproduction or networking permitted without license from IHS

Not for Resale

Foreword (This Foreword is not part of American National Standard C78.22-1995)

This American National Standard, Incandescent Lamps - Miscellaneous types, C78.23-1995 sets forth the physical and electrical characteristics of the group of incandescent lamps that have C, S, T, or similar bulb shapes which are not covered in American National Standards ANSI C78.20-1995 and ANSI C78.22-1995.

Suggestions for improvement of this standard will be welcome. They should be sent to the Secretary of Committee C78. National Electrical Manufacturers Association 1300 North 17th Street, Suite 1847, Rosslyn, VA 22209.

This standard was processed and approved for submittal to ANSI by C78 Accredited Standards Committee on Electric Lamps, and C78-1, Incandescent Lamps. Committee approval of the standard does not necessarily imply that all committee members voted for its approval.

The members of the Committees at the time of publishing are:

Al Rousseau, C78, Chairman
Randolph N. Roy, Secretariat
Al Rousseau, Technical Coordinator
Jeanne L. Spicer, Editorial Coordinator

Organization Represented	*Name of Representative*
Advance Transformer Company	Norman Grimshaw
Duro-Test Corporation	Herbert Strauss
Edison Electric Institute (Delegate)	William Maguire
Inchcape ETL Testing Laboratory	Craig Davenport
General Electric Lighting	Ralph Kaiser
Illuminating Engineering Society	Rita Harrold
National Electrical Manufacturers Association (Delegate)	Richard Snow
OSRAM SYLVANIA INC	Peter Bleasby
Philips Lighting Company	Alfred Rousseau
Underwriters Laboratories	David Belt

William A. Murray, C78-1, Chairman
Randolph N. Roy, Secretariat

Duro-Test Corporation	Michael J. Santelli
General Electric Lighting	Charles W. Cox
	John P. Krissinger
Indy Lighting, Inc.	Ted Yahraus
OSRAM SYLVANIA INC.	David Fox
	Richard Fleegal
Philips Lighting Company	William A. Murray
	Ed Hinde
	Steven Sirek
Underwriters Laboratories, Inc.	David M. Belt
	Kevin P. Kanakos

Copyright National Electrical Manufacturers Association
Provided by IHS under license with NEMA
No reproduction or networking permitted without license from IHS
Not for Resale

Part I

General Information

Copyright National Electrical Manufacturers Association
Provided by IHS under license with NEMA
No reproduction or networking permitted without license from IHS

Not for Resale

Copyright National Electrical Manufacturers Association
Provided by IHS under license with NEMA
No reproduction or networking permitted without license from IHS
Not for Resale

American National Standard for Electric Lamps — Incandescent Lamps — Miscellaneous Types

1 Scope

This standard sets forth the physical and electrical characteristics of the group of incandescent lamps that have C, S, T, or similar bulb shapes which are not covered in American National Standards ANSI C78.20-1989 and ANSI C78.22-1989. Only clear and inside frost bulb finishes are acknowledged. Excluded from coverage are tungsten-halogen lamps and projection lamps. Other groups of incandescent lamps are covered in the following associated standards:

American National Standard for Electric Lamps - Incandescent Lamps - A, G, PS and Similar Shapes with E26 Medium Screw Bases, ANSI C78.20-1995

American National Standard for Electric Lamps - Incandescent Lamps - PAR and R Shapes, ANSI C78.21-1995

American National Standard for Electric Lamps - Incandescent Lamps - A, G, PS and Similar Shapes with E39 Medium Screw Bases, ANSI C78.22-1995

The lamps specified in this standard do not relate closely to those internationally standardized lamps specified in International Electrotechnical Commission (IEC) Publication 64, Tungsten Filament Lamp for Domestic and Similar General Lighting Purposes.[1]

2 Normative references

The following standards contain provisions which, through reference in this text, constitute provisions of this American National Standard. At the time of publication, the editions indicated were valid. All standards are subject to revision, and parties to agreements based on this American National Standard are encouraged to investigate the possibility of applying the most recent editions of the standards indicated below.

ANSI C78.25-1991, *Electric Lamps–Method of Measuring Lamp-Base Temperature Rise*

ANSI C79.1-1980(R1994), *Nomenclature for Glass Bulbs Intended for Use with Electric Lamps*

ANSI C81.61-1990, *American National Standards for Electrical Lamp Bases*

ANSI C81.62-1991, *American National Standard for Electrical Lamp Holders*

IES LM45, *IES Approved Method for Electrical and Photometric Measurements of General Service Incandescent Filament Lamps*[2]

IES LM54, *IES Guide to Lamp Seasoning*[2]

SR30a, *Procedure for Use in Preparation of Lamp Space Drawings*[3]

[1] Available from the American National Standards Institute, 11 West 42nd St., New York, NY 10036.

[2] Available from the Illuminating Engineering Society, 120 Wall St., 17th Floor, New York, NY 10005-4001.

[3] Available from the C78 Secretariat, c/o National Electrical Manufacturers Association, 1300 North 17th Street, Suite 1847, Rosslyn, VA 22209.

Copyright National Electrical Manufacturers Association
Provided by IHS under license with NEMA
No reproduction or networking permitted without license from IHS Not for Resale

3 Definitions and abbreviations

In addition to bulb and base codes that are defined in the standards listed in Section 2, some terms common to the industry are utilized in this standard.

3.1 MOL (Maximum Overall Length): The distance along the lamp's axis from eyelet solder to top of bulb.

3.2 LCL (Light Center Length): The distance from the reference plane (eyelet solder for screw bases) to the center of the light-emitting area of the lamp.

3.3 Class: A grouping of like lamps having the same rated wattage, bulb shape, base, MOL, bulb finish, and filament type[4], including two or more voltage ratings within a voltage range.

NOTE— Each line item in Table 1 is a "class."

3.4 Voltage Range: A series of rated voltages related to commonly available supply lines.

NOTE—A footnote to Table 1 lists several common voltage ranges applying to classes of lamps in this standard.

3.5 Rated Wattage: The wattage marked on the lamp.

3.6 Rated Voltage: The voltage marked on the lamp or declared by the manufacturer.

NOTE—If lamps are marked with a range voltage, it shall be interpreted that they are appropriate for use on any line voltage within that range. Consult manufacturer's catalog to determine design voltage.

3.7 Base Temperature Rise: The surface temperature rise (above ambient) of a standard test lampholder fitted to the lamp, when measured in accordance with the standard method. See Section 8 for methods of measurement.

3.8 Service: The field of most common application for a given lighting source. Service as used in this standard is not necessarily the only application.

4 Lamp designations

This standard does not place any control over lamp designations. Incandescent lamps are generally designated by wattage and voltage ratings. Additional codes may be applied by the lamp manufacturer. See the lamp manufacturer's catalog for detailed information.

5 Bulb designations

Bulb designations shall be as defined in ANSI C79.1. Since the traditional eighth-inch sizes have long been utilized in some lamp designations, they are used in this standard. Their metric equivalents are shown in parentheses.

[4]There is no attempt to identify or classify filament type in this standard.

Copyright National Electrical Manufacturers Association
Provided by IHS under license with NEMA
No reproduction or networking permitted without license from IHS
Not for Resale

6 Bulb finish

Only lamps with clear or inside frost finishes shall be considered in this standard. Silver bowl, enamel, transparent, and other special coatings are not covered.

7 Lamp space drawings

For each bulb- base- MOL category, the lamp space drawings in Part III of this standard show the maximum limits of the space that may be occupied by any part of the bulb. A typical bulb shape is shown, as a dashed line, within that maximum space. The space shown shall accommodate the longest and shortest lamps with maximum bowl and neck diameters, and maximum bulb eccentricity. These drawings were prepared in accordance with the lamp space drawing procedures, SR30a.

The following general conditions apply to the construction of these space drawings:

a) Straight lines are used as much as possible to simplify the space outlines. All compromises with the actual space are in excess of the actual space required.

b) All excursions of a lamp bulb are shown relative to a fixed-position base.

c) Bulb eccentricity with respect to the base axis is a combination of allowances for angular tilt (skewness) and lateral displacement (true eccentricity). An eccentricity angle of 3° applies generally to incandescent lamps, unless special applications require tighter limits.

d) The base contact-making gauge for each type of base controls the space near the rim of the base, in the base-to-neck transition zone.

e) All dimensions are in millimeters unless otherwise specified.

f) The figure numbers shown in Table 1 under the column "Lamp Space Drawing" relate directly to the former American National Standards for that category. For instance, Figure C78.23-200 was derived from the former standard ANSI C78.200.

8 Methods of measurement

8.1 The method of measuring base temperature rise shall be as described in ANSI C78.25-1991.

8.2 A recommended method of electrical measurement of lamps can be found in IES LM45.

9 Electrical characteristics

The values of lamp voltage, current, and wattage shown in Part II are those nominal values that apply after the lamps have been seasoned. (See IES LM54 for guidelines on lamp seasoning.)

Copyright National Electrical Manufacturers Association
Provided by IHS under license with NEMA
No reproduction or networking permitted without license from IHS
Not for Resale

10 Requirements

10.1 Screw-shell-type bases, including the E12 candelabra screw, the E17 intermediate screw, the E26 medium screw, and special gauges, shall be as described in ANSI C81.61 and ANSI C81.63.

10.2 Individual lamps shall satisfy the limits for MOL that apply to their lamp class as shown in Table 1.

10.3 All finished lamps shall have controlled dimensions, bulb size, and eccentricity, such that they occupy a space within the dimensions of the appropriate lamp space drawing in Part III.

10.4 The average base temperature rise of a sample of lamps, of a specific rated voltage, shall not be greater than the limit shown for its lamp class in Table 1.

11 Information for luminaire design

11.1 The lamps listed in this standard are intended for indoor applications or use within fully enclosed luminaires of the proper rating.

Copyright National Electrical Manufacturers Association
Provided by IHS under license with NEMA
No reproduction or networking permitted without license from IHS

Not for Resale

Part II

Lamp Classes

Copyright National Electrical Manufacturers Association
Provided by IHS under license with NEMA
No reproduction or networking permitted without license from IHS

Not for Resale

Copyright National Electrical Manufacturers Association
Provided by IHS under license with NEMA
No reproduction or networking permitted without license from IHS

Not for Resale

Copyright National Electrical Manufacturers Association
Provided by IHS under license with NEMA
No reproduction or networking permitted without license from IHS

Table 1 – Miscellaneous lamps

Line No.	Rated Wattage	Rated Voltage (Note 1)	Bulb (Note 2)	Base (Note 3)	Lamp Maximum Overall Length (MOL)		Light Center Length (LCL)		Lamp Space Drawing	Service	Potential Hazard Notation
					mm	in	mm	in			
1	4	A	C7(C22)	E12	54	2-1/8	33.3	1-5/16	C78.23-200a	General	—
2	6	A	S6(P19)	E12	47.7	1-7/8	33.3	1-5/16	C78.23-200	General	—
3	6	E	S6(P19)	E12	47.7	1-7/8	33.3	1-5/16	C78.23-200	General	—
4	7	A	C7(C22)	E12	54	2-1/8	33.3	1-5/16	C78.23-200a	General	—
5	10	D	S6(P19)	E12	47.7	1-7/8	33.3	1-5/16	C78.23-200	General	—
6	10	A	S11(S35)	E17	58.8	2-5/16	41.2	1-5/8	C78.23-202	General	—
7	25	A	T6-1/2(T21)	E17	139.7	5-1/2	—	—	C78.23-207	General	—
8	25	A	T10(T32)	E26	142.9	5-5/8	—	—	C78.23-208	General	—
9	40	A	S11(S35)	E17	58.8	2-5/16	41.2	1-5/8	C78.23-202	General	—
10	40	A	T6-1/2(T21)	E17	139.7	5-1/2	—	—	C78.23-207	General	—
11	40	A	T8(T25)	E26	301.7	11-7/8	—	—	C78.23-212	Showcase	—
12	40	A	T10(T32)	E26	142.9	5-5/8	—	—	C78.23-208	General	—

NOTES
1 Common lamp voltage ratings for voltage codes are as follows:
A = 115-125V, 120V, 125V, 125-130V, etc.
D = 220V, 220-230V, 230V, 240V, 250V, etc.
E = 135V, 145V, 155V, etc.
2 Standard bulb finishes are clear and inside frost.
3 Common American terminology for the base codes is as follows: E12 - candelabra screw base, E17 - intermediate screw base, E26 - medium screw base (see ANSI/UL 496).

Not for Resale

Copyright National Electrical Manufacturers Association
Provided by IHS under license with NEMA
No reproduction or networking permitted without license from IHS

Not for Resale

Part III

Lamp Space Drawings

Copyright National Electrical Manufacturers Association
Provided by IHS under license with NEMA
No reproduction or networking permitted without license from IHS

Not for Resale

Copyright National Electrical Manufacturers Association
Provided by IHS under license with NEMA
No reproduction or networking permitted without license from IHS
Not for Resale

Copyright National Electrical Manufacturers Association
Provided by IHS under license with NEMA
No reproduction or networking permitted without license from IHS
Not for Resale

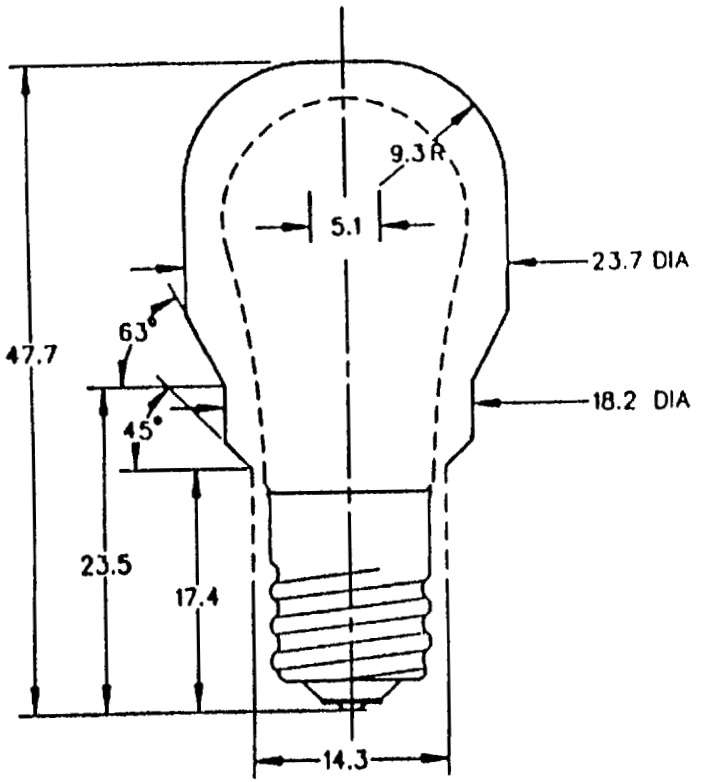

Bulb:	S6 (P19)
Base:	Candelabra screw, E12/15
Overall Length:	47.7 (1-7/8 in.) max 42.9 (1-11/16 in.) min
Eccentricity:	3°

NOTE—Dimensions are in millimeters, unless otherwise specified

Figure 78.23-200

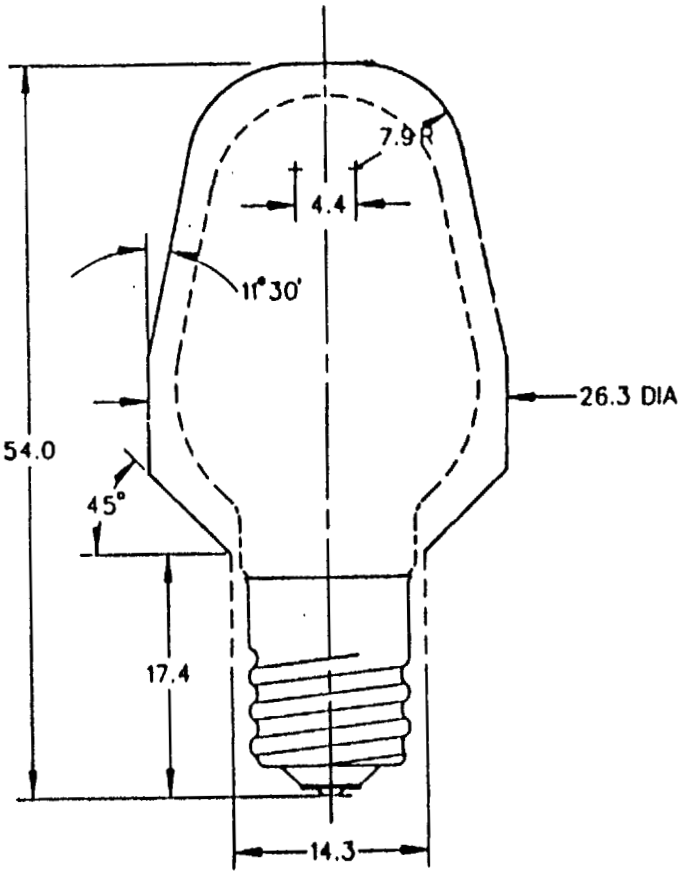

Bulb:	C7 (C22)
Base:	Candelabra screw, E12/15
Overall length:	54.0 (2-1/8 in.) max 49.2 (1-15/16 in.) min
Eccentricity:	3°

NOTE—Dimensions are in millimeters, unless otherwise specified

Figure 78.23-200a

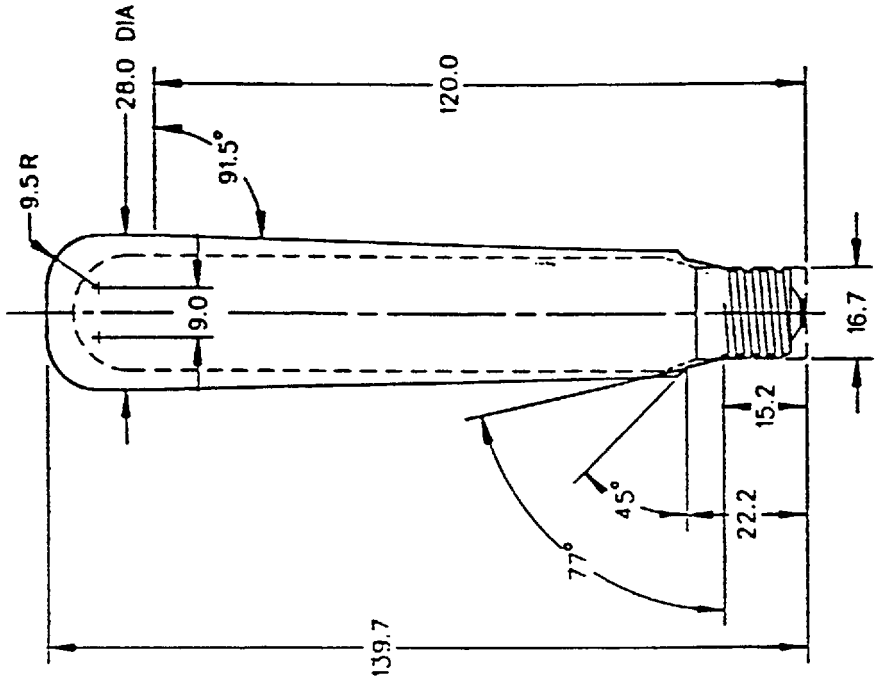

Bulb: T6.5 (T21)
Base: Intermediate screw, E17/20
Overall length: 139.7 (5-1/2 in.) max
130.2 (5-1/8 in.) min
Eccentricity: 3°

NOTE—Dimensions are in millimeters, unless otherwise specified

Figure 78.23-207

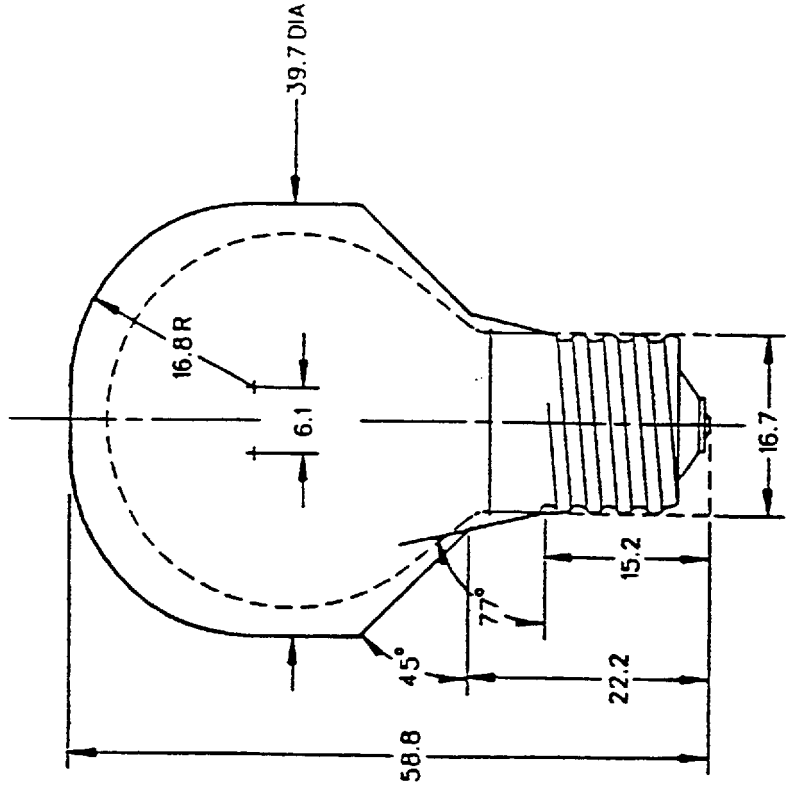

Bulb: S11 (P35)
Base: Intermediate screw, E17/20
Overall Length: 58.8 (2-5/16 in.) max
52.3 (2-1/16 in.) min
Eccentricity: 3°

NOTE—Dimensions are in millimeters, unless otherwise specified

Figure 78.23-202

Copyright National Electrical Manufacturers Association
Provided by IHS under license with NEMA
No reproduction or networking permitted without license from IHS

Not for Resale

Copyright National Electrical Manufacturers Association
Provided by IHS under license with NEMA
No reproduction or networking permitted without license from IHS

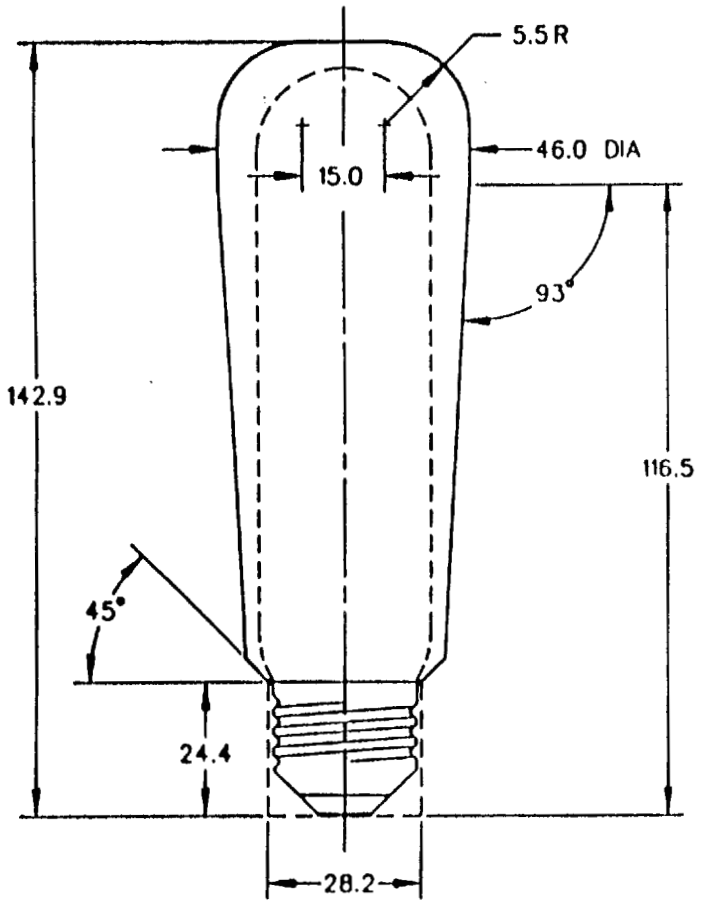

Bulb:	T10 (T32)
Base:	Medium screw, E26/24
Overall Length:	142.9 (5-5/8 in.) max 133.3 (5-1/4 in.) min
Eccentricity:	3°

NOTE—Dimensions are in millimeters, unless otherwise specified

Figure 78.23-208

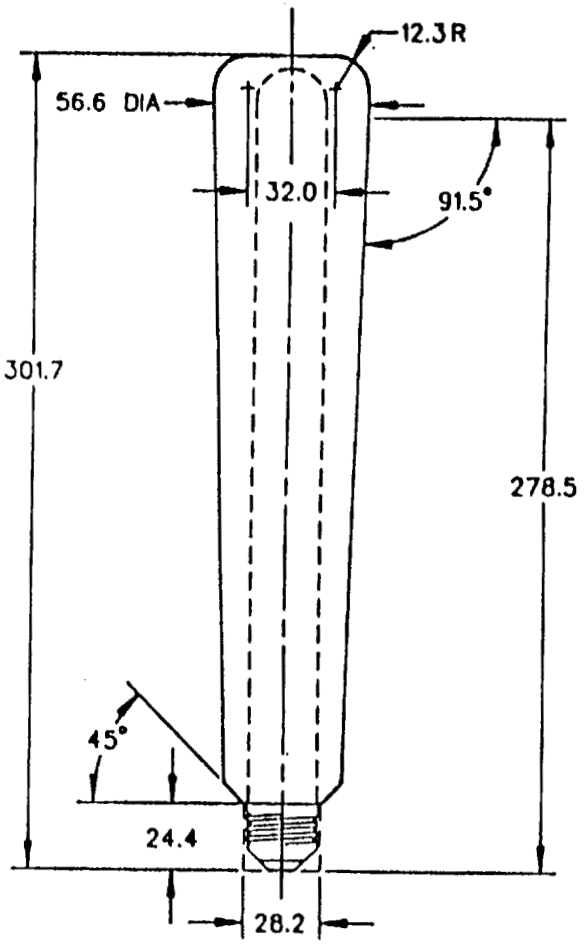

Bulb:	T8 (T25)
Base:	Medium screw, E26/24
Overall length:	301.7 (11-7/8 in.) max 292.1 (11-1/2 in.) min
Eccentricity:	3°

NOTE—Dimensions are in millimeters, unless otherwise specified

Figure 78.23-212

Not for Resale

Copyright National Electrical Manufacturers Association
Provided by IHS under license with NEMA
No reproduction or networking permitted without license from IHS
Not for Resale

Part IV

Annexes

Copyright National Electrical Manufacturers Association
Provided by IHS under license with NEMA
No reproduction or networking permitted without license from IHS

Not for Resale

Copyright National Electrical Manufacturers Association
Provided by IHS under license with NEMA
No reproduction or networking permitted without license from IHS

Not for Resale

ANNEX A
(informative)

Former designations of C78 incandescent lamp standards

The revised standard ANSI C78.23-1995 contains information that was shown in the formerly designated American National Standards as follows:

Title	Former Designation
S-6 Bulb, Candelabra Screw Base	ANSI C78.200-1949(R1981)
C-7 Bulb, Candelabra Screw Base	ANSI C78.200-1949(R1981)
S-11 Bulb, Intermediate Screw Base	ANSI C78.202-1949(R1981)
T-6-1/2 Bulb, Intermediate Screw Base	ANSI C78.207-1949(R1981)
T-10 Bulb, Medium Screw Base	ANSI C78.208-1949(R1981)
T-8 Bulb, Medium Screw Base	ANSI C78.212-1949(R1981)

Copyright National Electrical Manufacturers Association
Provided by IHS under license with NEMA
No reproduction or networking permitted without license from IHS
Not for Resale

ANNEX B
(informative)

Bibliography

The following standards can be used in conjunction with this standard:

ANSI C81.62-1991, American National Standard for Electrical Lamp Holders

ANSI C81.63-1991, American National Standard for Electrical Lamp Bases and Lampholders Gauges

ANSI/UL 496-1986, Edison-Base Lampholders

Copyright National Electrical Manufacturers Association
Provided by IHS under license with NEMA
No reproduction or networking permitted without license from IHS
Not for Resale