American National Standard

ANSI C78.22-1995

American National Standard for Incandescent Lamps — A, G, PS, and Similar Shapes with E39 Mogul Screw Bases

NEMA

National Electrical Manufacturers Association
1300 North 17th Street
Suite 1847
Rosslyn, VA 22209
(703) 841-3200

American National Standard

Copyright National Electrical Manufacturers Association
Provided by IHS under license with NEMA
No reproduction or networking permitted without license from IHS

Not for Resale

ANSI® C78.22-1995

American National Standard

For Incandescent Lamps—

A, G, PS, and similar shapes with E39 mogul screw bases

Secretariat
National Electrical Manufacturers Association

Approved January 12, 1995
American National Standards Institute, Inc.

Copyright National Electrical Manufacturers Association
Provided by IHS under license with NEMA
No reproduction or networking permitted without license from IHS

Not for Resale

American National Standard

Approval of an American National Standard requires verification by ANSI that the requirements for due process, consensus, and other criteria for approval have been met by the standards developer.

Consensus is established when, in the judgment of the ANSI Board of Standards Review, substantial agreement has been reached by directly and materially affected interests. Substantial agreement means much more than a simple majority, but not necessarily unanimity. Consensus requires that all views and objections be considered, and that a concerted effort be made toward their resolution.

The use of American National Standards is completely voluntary; their existence does not in any respect preclude anyone, whether he has approved the standards or not, from manufacturing, marketing, purchasing, or using products, processes, or procedures not conforming to the standards.

The American National Standards Institute does not develop standards and will in no circumstances give an interpretation of any American National Standard. Moreover, no person shall have the right or authority to issue an interpretation of an American National Standard in the name of the American National Standards Institute. Requests for interpretations should be addressed to the secretariat or sponsor whose name appears on the title page of this standard.

CAUTION NOTICE: This American National Standard may be revised or withdrawn at any time. The procedures of the American National Standards Institute require that action be taken periodically to reaffirm, revise, or withdraw this standard. Purchasers of American National Standards may receive current information on all standards by calling or writing the American National Standards Institute.

Published by

National Electrical Manufacturers Association
1300 North 17th Street, Suite 1847, Rosslyn, VA 22209

Copyright © 1996 National Electrical Manufacturers Association
All rights reserved.

No part of this publication may be reproduced in any form, in an electronic retrieval system or otherwise, without prior written permission of the publisher.

Printed in the United States of America

Copyright National Electrical Manufacturers Association
Provided by IHS under license with NEMA
No reproduction or networking permitted without license from IHS

Not for Resale

CONTENTS

Page

Foreword ii

Part I – General Information 1

Part II – Lamp Classes 7

Table 1 9
Table 2 10

Part III – Lamp Space Drawings 11

Part IV – Annexes 17

Annex A 19
Annex B 20

Copyright National Electrical Manufacturers Association
Provided by IHS under license with NEMA
No reproduction or networking permitted without license from IHS
Not for Resale

Foreword (This Foreword is not part of American National Standard C78.22-1995)

This American National Standard, Incandescent Lamps — A, G, PS, and Similar Shapes with E39 Mogul Screw Bases, C78.22-1995 sets forth the physical and electrical characteristics of the group of incandescent lamps that have A, G, PS, and similar bulb shapes with E39 Mogul screw (single- or double-contact) bases.

Suggestions for improvement of this standard will be welcome. They should be sent to the Secretary of Committee C78. National Electrical Manufacturers Association, 1300 North 17th Street, Suite 1847, Rosslyn, VA 22209.

This standard was processed and approved for submittal to ANSI by C78 Accredited Standards Committee on Electric Lamps, and C78-1, Incandescent Lamps. Committee approval of the standard does not necessarily imply that all committee members voted for its approval.

The members of the Committees at the time of publishing are:

Al Rousseau, C78, Chairman
Randolph N. Roy, Secretariat
Al Rousseau, Technical Coordinator
Jeanne L. Spicer, Editorial Coordinator

Organization Represented	*Name of Representative*
Advance Transformer Company	Norman Grimshaw
Duro-Test Corporation	Herbert Strauss
Edison Electric Institute (Delegate)	William Maguire
Inchcape ETL Testing Laboratory	Craig Davenport
General Electric Lighting	Ralph Kaiser
Illuminating Engineering Society	Rita Harrold
National Electrical Manufacturers Association (Delegate)	Richard Snow
OSRAM SYLVANIA INC	Peter Bleasby
Philips Lighting Company	Alfred Rousseau
Underwriters Laboratories	David Belt

William A. Murray, C78-1, Chairman
Randolph N. Roy, Secretariat

Duro-Test Corporation	Michael J. Santelli
General Electric Lighting	Charles W. Cox
	John P. Krissinger
Indy Lighting, Inc.	Ted Yahraus
OSRAM SYLVANIA INC.	David Fox
	Richard Fleegal
Philips Lighting Company	William A. Murray
	Ed Hinde
	Steven Sirek
Underwriters Laboratories, Inc.	David M. Belt
	Kevin P. Kanakos

Copyright National Electrical Manufacturers Association
Provided by IHS under license with NEMA
No reproduction or networking permitted without license from IHS
Not for Resale

Part I

General Information

--`,,`,,`-`-`,,`,,`,`,,`---

Copyright National Electrical Manufacturers Association
Provided by IHS under license with NEMA
No reproduction or networking permitted without license from IHS
Not for Resale

Copyright National Electrical Manufacturers Association
Provided by IHS under license with NEMA
No reproduction or networking permitted without license from IHS
Not for Resale

American National Standard for Electric Lamps — Incandescent Lamps — A, G, PS, and Similar Shapes with E39 Mogul Screw Bases

1 Scope

This standard sets forth the physical and electrical characteristics of the group of incandescent lamps that have A, G, PS, and similar bulb shapes with E39 mogul screw (single- or double-contact) bases. Only clear, inside frost, and white bulb finishes are acknowledged. Excluded from coverage are tungsten-halogen lamps and projection lamps. In addition to common-line voltage lamps, listed in Table 1, a group of series burning lamps rated at constant current are covered in Table 2.

Other groups of incandescent lamps are covered in the following related standards:

ANSI C78.20-1995, American National Standard for Electric Lamps – Incandescent Lamps – A, G, PS, and Similar Shapes with E26 Medium Screw Bases

ANSI C78.21-1995, American National Standard for Electric Lamps – Incandescent Lamps – PAR and R Shapes

ANSI C78.23-1995, American National Standard for Electric Lamps – Incandescent Lamps – Miscellaneous Types

At the time of issuance of this standard, there was no comparable standard published by the International Electrotechnical Commission (IEC).

2 Normative references

The following standards contain provisions which, through reference in this text, constitute provisions of this American National Standard. At the time of publication, the editions indicated were valid. All standards are subject to revision, and parties to agreements based on this American National Standard are encouraged to investigate the possibility of applying the most recent editions of the standards indicated below.

ANSI C78.25-1991, *Electric lamps – Method of Measuring Lamp-Base Temperature Rise*

ANSI C79.1-1980 (R1994), *Nomenclature for Glass Bulbs Intended for Use with Electric Lamps*

ANSI C81.61-1990, *American National Standard for Electrical Lamp Bases*

ANSI C81.63-1991, *American National Standard for Lamp Bases and Lamp Holders Gauges*

IES LM45, *IES Approved Method for Electrical and Photometric Measurements of General Service Incandescent Filament Lamps*[1]

IES LM54, *IES Guide to Lamp Seasoning*[1]

SR 30a, *Procedure for Use in Preparation of Lamp Space Drawings*[2]

[1] Available from the Illuminating Engineering Society, 120 Wall Street – 17th Floor, New York, NY 10005-4001.

[2] Available from the C78 Secretariat, c/o National Electrical Manufacturers Association, 1300 North 17th Street, Suite 1847, Rosslyn, VA 22209.

Copyright National Electrical Manufacturers Association
Provided by IHS under license with NEMA
No reproduction or networking permitted without license from IHS Not for Resale

3 Definitions and abbreviations

In addition to bulb and base codes that are defined in the standards listed in Section 2, some terms common to the industry are utilized in this standard.

3.1 MOL (Maximum Overall Length): The distance along the lamp's axis from the eyelet solder to the top of the bulb.

3.2 LCL (Light Center Length): The distance from the reference plane (eyelet solder for screw bases) to the center of the light-emitting area of the lamp.

3.3 Class: A grouping of like lamps having the same rated wattage, bulb shape, base, MOL, bulb finish, and filament type,[3] including two or more voltage ratings within a voltage range.

NOTE—Each line item in Tables 1 and 2 is a "class."

3.4 Voltage range: A series of rated voltages related to commonly available supply lines.

NOTE—A footnote to Tables 1 and 2 lists several common voltage ranges applying to classes of lamps in this standard.

3.5 Rated wattage: The wattage marked on the lamp.

3.6 Rated voltage: The voltage marked on the lamp or declared by the manufacturer.

NOTE—If lamps are marked with a range voltage, it shall be interpreted that they are appropriate for use on any line voltage within that range. Consult manufacturer's catalog to determine design voltage.

3.7 Rated lumens: The lumen value marked on the lamp or declared by the manufacturer.

3.8 Rated current: The current value marked on the lamp, if necessary.

3.9 Base temperature rise: The surface temperature rise (above ambient) of a standard test lampholder fitted to the lamp, when measured in accordance with the standard method. See Section 8 for methods of measurement.

3.10 Service: The field of most common application for a given lighting source. Service, as used in this standard, is not necessarily the only application.

4 Lamp designations

This standard does not place any control over lamp designations. Incandescent lamps are generally designated by wattage and voltage ratings. Additional codes may be applied by the lamp manufacturer. See the lamp manufacturer's catalog for detailed information.

5 Bulb designations

Bulb designations used in this standard are defined in ANSI C79.1. Since the traditional eighth-inch sizes have long been utilized in some lamp designations, they are used in this standard. Their metric versions are shown in parentheses.

[3]There is no attempt to identify or classify filament type in this standard.

Copyright National Electrical Manufacturers Association
Provided by IHS under license with NEMA
No reproduction or networking permitted without license from IHS
Not for Resale

6 Bulb finish

Only lamps with clear, inside frost, or translucent white bulb finishes are considered in this standard. Silver bowl, enamel, transparent, and other special coatings are not covered.

7 Lamp space drawings

For each bulb- base- MOL category, the lamp space drawings in Part III of this standard show the maximum limits of the space that may be occupied by any part of the bulb. A typical bulb shape is shown, as a dashed line, within that maximum space. The space shown shall accommodate the longest and shortest lamps with maximum bowl and neck diameters, and maximum bulb eccentricity. These drawings were prepared in accordance with SR30a.

The following general conditions apply to the construction of these space drawings:

a) Straight lines are used as much as possible to simplify the space outlines. All compromises with the actual space are in excess of the actual space required.

b) All excursions of a lamp bulb are shown relative to a fixed position base.

c) Bulb eccentricity with respect to the base axis is a combination of allowances for angular tilt (skewness) and lateral displacement (true eccentricity). An eccentricity angle of 3° applies generally to incandescent lamps, unless special applications require tighter limits.

d) The base contact-making gauge for each type of base controls the space near the rim of the base in the base-to-neck transition zone.

e) All dimensions are in millimeters unless otherwise specified.

f) The figure numbers shown in Tables 1 and 2 under the column "Lamp Space Drawing" relate directly to the former American National Standard for that category. For instance, Figure C78.22-214 was derived from the former standard ANSI C78.214-1949.

8 Methods of measurement

8.1 The method of measuring base temperature rise shall be as described in ANSI C78.25.

8.2 A recommended method of electrical measurement of lamps can be found in IES LM45.

9 Electrical characteristics

The values of lamp voltage, current, and wattage shown in Part II are those nominal values that apply after the lamps have been seasoned. (See IES LM54 for guidelines on lamp seasoning.)

10 Requirements

10.1 Screw-shell type bases, including the E39 mogul screw and E39d double-contact mogul screw and special gauges, shall comply with C81.61 and ANSI C81.63.

10.2 Individual lamps shall satisfy the limits for MOL and LCL that apply to their lamp class as shown in Tables 1 and 2.

Copyright National Electrical Manufacturers Association
Provided by IHS under license with NEMA
No reproduction or networking permitted without license from IHS
Not for Resale

10.3 All finished lamps shall have controlled dimensions, bulb size, and eccentricity such that they occupy a space within the dimensions of the appropriate lamp space drawings in Part III.

10.4 The average base temperature rise of a sample of lamps, of a specific rated voltage, shall not be greater than the limit shown for its lamp class in Tables 1 and 2.

11 Information for luminaire design

11.1 Burning position

Certain incandescent lamps are restricted as to positioning during operation or "burning position". Lamps for three-way service, for example, may be designed for base-down burning only. Other limitations on burning position may apply, and these are noted in the column entitled "Potential Hazard Notation" in Tables 1 and 2. Misapplications of certain lamps could cause overheating of a luminaire.

11.2 Protection

The lamps listed in this standard are intended for indoor applications or use within fully enclosed luminaires of the proper rating.

Copyright National Electrical Manufacturers Association
Provided by IHS under license with NEMA
No reproduction or networking permitted without license from IHS
Not for Resale

Part II

Lamp Classes

Copyright National Electrical Manufacturers Association
Provided by IHS under license with NEMA
No reproduction or networking permitted without license from IHS
Not for Resale

Copyright National Electrical Manufacturers Association
Provided by IHS under license with NEMA
No reproduction or networking permitted without license from IHS

Not for Resale

Copyright National Electrical Manufacturers Association
Provided by IHS under license with NEMA
No reproduction or networking permitted without license from IHS
Not for Resale

Table 1 – Standard lamps with A, G, PS, and similar bulbs with E39 mogul screw or E39d double-contact mogul screw bases

Line	Rated Wattage or Current	Rated Wattage (Note 1)	Bulb (Note 2)	Base (Note 2)	Lamp Maximum Overall Length (MOL)		Light Center Length (LCL)		Lamp Space Drawing	Max. Base Temp. Rise K (Note 4)	Service	Potential Hazard Notation
					mm	in.	mm	in.				
1	50–100–150	A	PS25(PS79)	E39d	173	6-13/16	—	—	C78.22-214	—	Three-way	Note 6
2	100–200–300	A	PS25(PS79)	E39d	173	6-13/16	—	—	C78.22-214	—	Three-way	Note 6
3	300	A	PS30(PS95)	E39	223.8	8-13/16	177.8	7	C78.22-222	—	General	
4	300	A	PS35(PS110)	E39	238.2	9-3/8	177.8	7	C78.22-223	—	General	
5	300	D	PS35(PS110)	E39	238.2	9-3/8	177.8	7	C78.22-223	—	General	
6	301	A	PS35(PS110)	E39	238.2	9-3/8	177.8	7	C78.22-223	—	Street Railway	
7	500	A	PS35(PS110)	E39	238.2	9-3/8	177.8	7	C78.22-223	—	General	
8	500	A	PS40(PS125)	E39	247.7	9-3/4	177.8	7	C78.22-224	—	General	
9	500	D	PS40(PS125)	E39	247.7	9-3/4	177.8	7	C78.22-224	—	General	
10	500	A	G40(G127)	E39	179.4	7-1/16	108.0	4-1/4	C78.22-234	—	Spotlight/ Floodlight	Note 7
11	750	A	PS52(PS165)	E39	331.8	13-1/16	241.3	9-1/2	C78.22-225	—	General	
12	750	D	PS52(PS165)	E39	331.8	13-1/16	241.3	9-1/2	C78.22-225	—	General	
13	1000	A	PS52(PS165)	E39	331.8	13-1/16	241.3	9-1/2	C78.22-225	—	General	Note 5
14	1000	D	PS52(PS165)	E39	331.8	13-1/16	241.3	9-1/2	C78.22-225	—	General	Note 5
15	1000	A	G40(G127)	E39	179.4	7-1/16	108.0	4-1/4	C78.22-234	—	Spotlight	Notes 5, 7
16	1000	A	G40(G127)HG	E39	203.2	8	133.4	5-1/4	C78.22-235	—	Spotlight/ Floodlight	Notes 5, 7
17	1500	A	PS52(PS165)	E39	331.8	13-1/16	241.3	9-1/2	C78.22-225	—	Floodlight General	Note 5

NOTES

1 Common lamp voltage ratings for voltage codes are as follows:
A = 115–125V, 120V, 125V, 125–130v, etc.
D = 220V, 220–230V, 240V, 250V, etc.

2 Standard bulb finishes are clear, inside frost, and translucent white.

3 Common American terminology for base codes is as follows:
E39 – Mogul screw base
E39d – Double-contact mogul screw base

4 See Clause 3.9 and Clause 8.1.

5 Lamps with wattage ratings higher than 750W must be used in a lampholder rated at 1500W or higher. See ANSI/UL 496-1986.

6 Base-down burning only.

7 Base-down to horizontal burning.

Table 2 – Street series lamps with PS bulbs and E39 mogul screw bases

Line No.	Rated Lumens	Rated Current (Amperes)	Bulb (Note 1)	Bulb (Note 2)	Lamp Maximum Overall Length (MOL)		Light Center Length (LCL)		Lamp Space Drawings	Potential Hazard Notation
					mm	in.	mm	in.		
1	1,000	6.6	PS25(PS79)	E39	181	7-1/8	136.5	5-3/8	C78.22-245	—
2	2,500	6.6	PS25(PS79)	E39	181	7-1/8	136.5	5-3/8	C78.22-245	Base-up burning only
3	2,500	6.6	PS35(PS110)	E39	238.2	9-3/8	177.8	7	C78.22-223	—
4	4,000	6.6	PS35(PS110)	E39	238.2	9-3/8	177.8	7	C78.22-223	—
5	4,000	15	PS35(PS110)	E39	238.2	9-3/8	177.8	7	C78.22-223	Base-up burning only
6	4,000	15	PS35(PS110)	E39	238.2	9-3/8	158.8	6-1/4	C78.22-223	Base-down burning only
7	6,000	6.6	PS40(PS125)	E39	247.7	9-3/4	177.8	7	C78.22-224	—
8	6,000	20	PS40(PS125)	E39	247.7	9-3/4	177.8	7	C78.22-224	Base-up burning only
9	6,000	20	PS40(PS125)	E39	247.7	9-3/4	158.8	6-1/4	C78.22-224	Base-down burning only
10	10,000	20	PS40(PS125)	E39	247.7	9-3/4	177.8	7	C78.22-224	Base-up burning only
11	10,000	20	PS40(PS125)	E39	247.7	9-3/4	158.8	6-1/4	C78.22-224	Base-down burning only
12	15,000	20	PS40(PS125)	E39	247.7	9-3/4	177.8	7	C78.22-224	Base-up burning only
13	15,000	20	PS40(PS125)	E39	247.7	9-3/4	158.8	6-1/4	C78.22-224	Base-down burning only

NOTES

1 Standard bulb finishes are clear or inside frost.

2 The common American terminology for base code E39 is mogul screw base.

Copyright National Electrical Manufacturers Association
Provided by IHS under license with NEMA
No reproduction or networking permitted without license from IHS

Not for Resale

Part III

Lamp Space Drawings

Copyright National Electrical Manufacturers Association
Provided by IHS under license with NEMA
No reproduction or networking permitted without license from IHS

Not for Resale

Copyright National Electrical Manufacturers Association
Provided by IHS under license with NEMA
No reproduction or networking permitted without license from IHS

Not for Resale

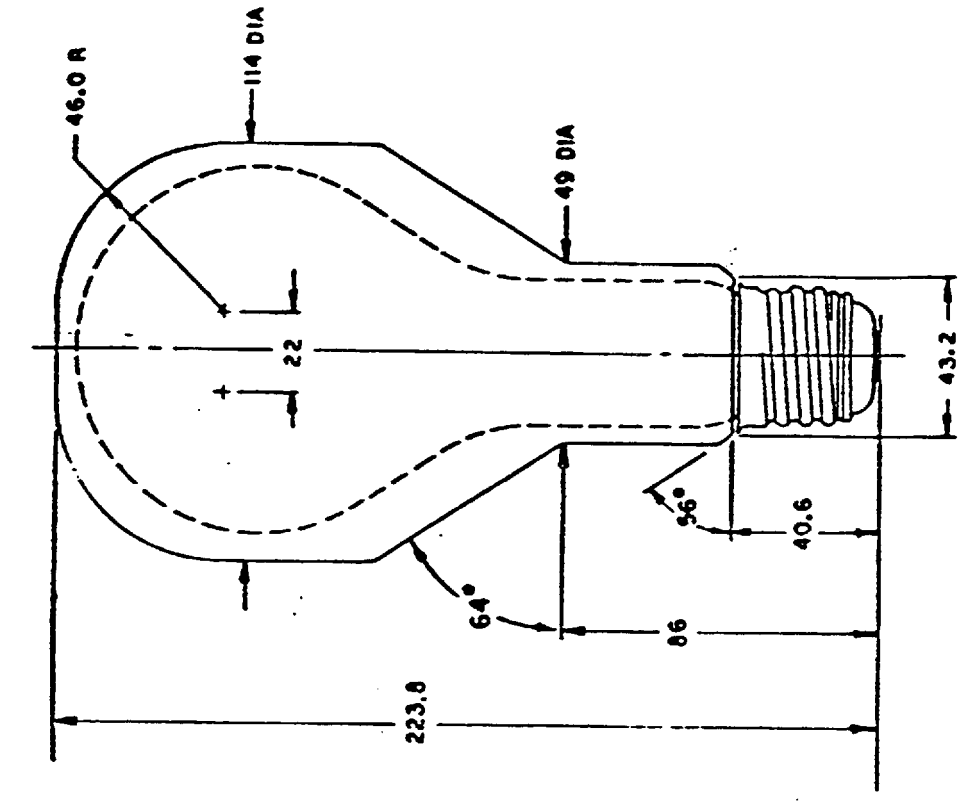

Bulb: PS30 (PS95)
Base: Mogul screw, E39/41
Overall length: 223.8 (8-13/16 in.) max
211.1 (8-5/16 in.) min
Eccentricity: 3°

NOTE—Dimensions are in millimeters, unless otherwise specified.

Figure C78.22-222

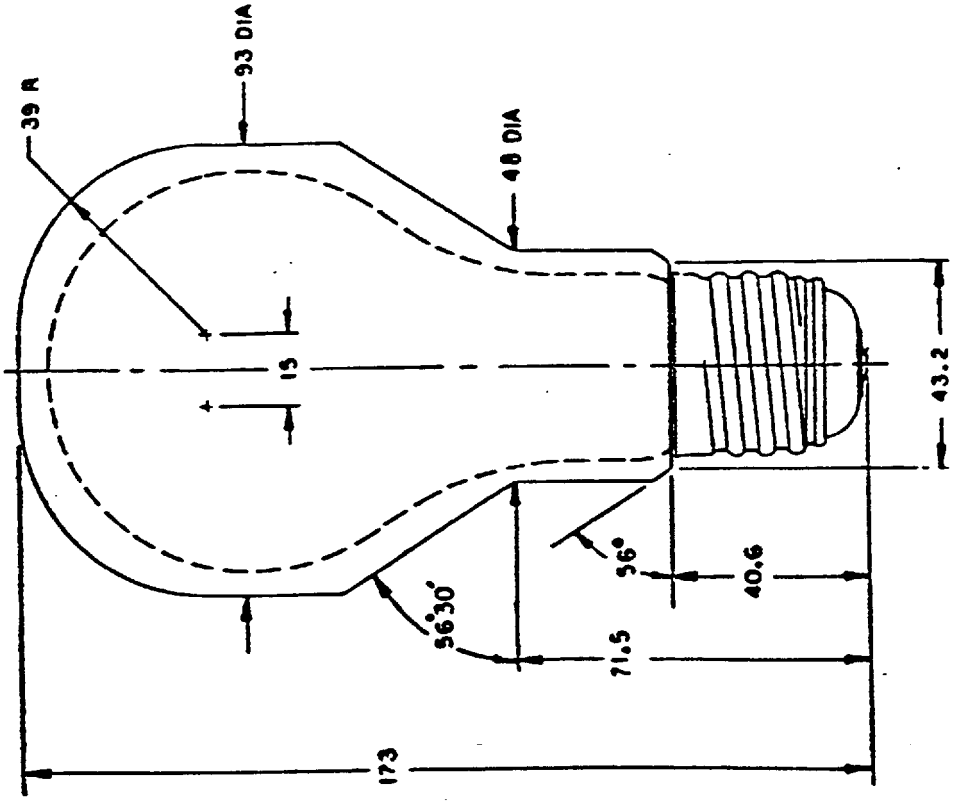

Bulb: PS25 (PS79)
Base: Mogul screw, E39/41
Overall length: 173.0 (6-13/16 in.) max
166.7 (6-9/16 in.) min
Eccentricity: 3°

NOTE—Dimensions are in millimeters, unless otherwise specified.

Figure C78.22-214

Copyright National Electrical Manufacturers Association
Provided by IHS under license with NEMA
No reproduction or networking permitted without license from IHS

Not for Resale

Copyright National Electrical Manufacturers Association
Provided by IHS under license with NEMA
No reproduction or networking permitted without license from IHS
Not for Resale

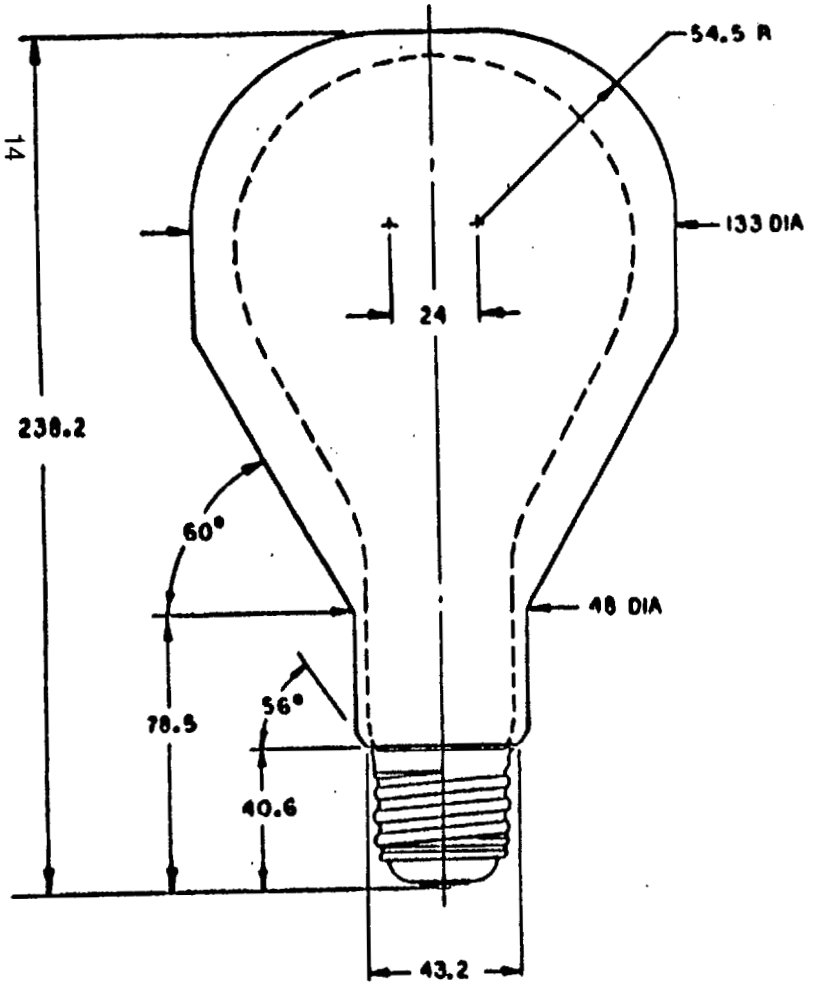

Bulb:	PS35 (PS110)
Base:	Mogul screw, E39/41
Overall length:	238.2 (9-3/8 in.) max
	225.4 (8-7/8 in.) min
Eccentricity:	3°

NOTE—Dimensions are in millimeters, unless otherwise specified.

Figure C78.22-223

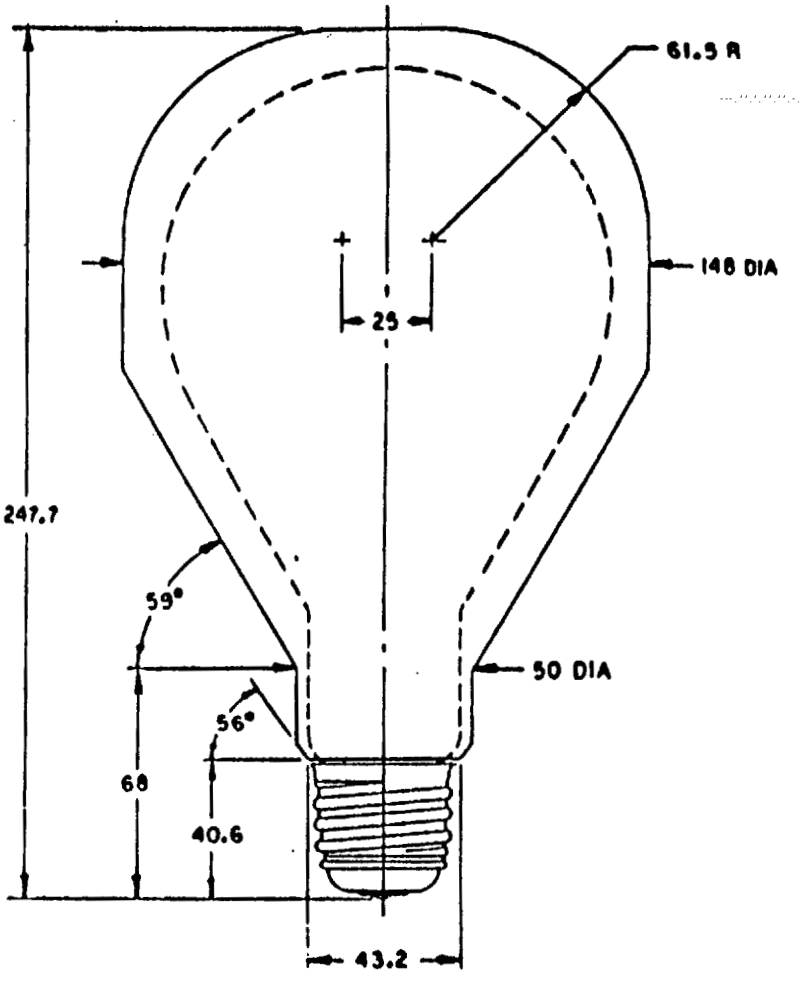

Bulb:	PS40 (PS125)
Base:	Mogul screw, E39/41
Overall length:	247.7 (9-3/4 in.) max
	230.9 (9-3/32 in.) min
Eccentricity:	3°

NOTE—Dimensions are in millimeters, unless otherwise specified.

Figure C78.22-224

Copyright National Electrical Manufacturers Association
Provided by IHS under license with NEMA
No reproduction or networking permitted without license from IHS
Not for Resale

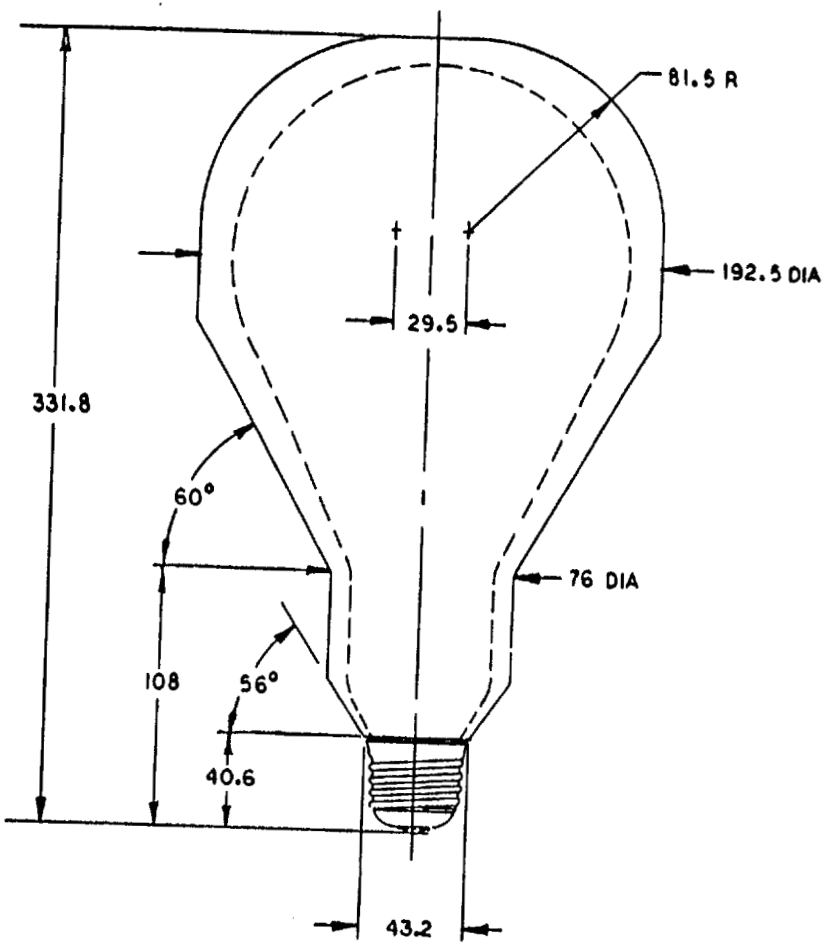

Bulb:	PS52 (PS165)
Base:	Mogul screw, E39/41
Overall length:	331.8 (13-1/16 in.) max 313.5 (12-11/32 in.) min
Eccentricity:	3°

NOTES
1 Some lamps may not conform to the base gauge for testing contact-making in accordance with ANSI C81.63
2 Dimensions are in millimeters, unless otherwise specified.

Figure C78.22-225

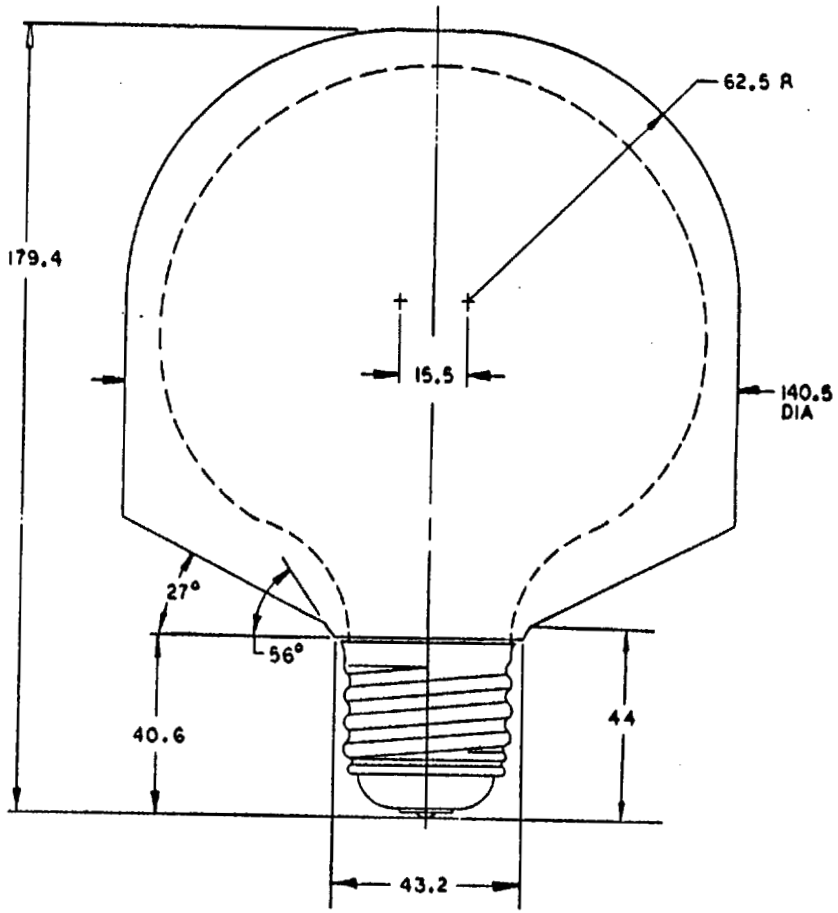

Bulb:	G40 (G127)
Base:	Mogul screw, E39/41
Overall length:	179.4 (7-1/16 in.) max 165.1 (6-1/2 in.) min
Eccentricity:	3°

NOTES
1 Some lamps may not conform to the base gauge for testing contact-making in accordance with ANSI C81.63
2 Dimensions are in millimeters, unless otherwise specified.

Figure C78.22-234

Copyright National Electrical Manufacturers Association
Provided by IHS under license with NEMA
No reproduction or networking permitted without license from IHS
Not for Resale

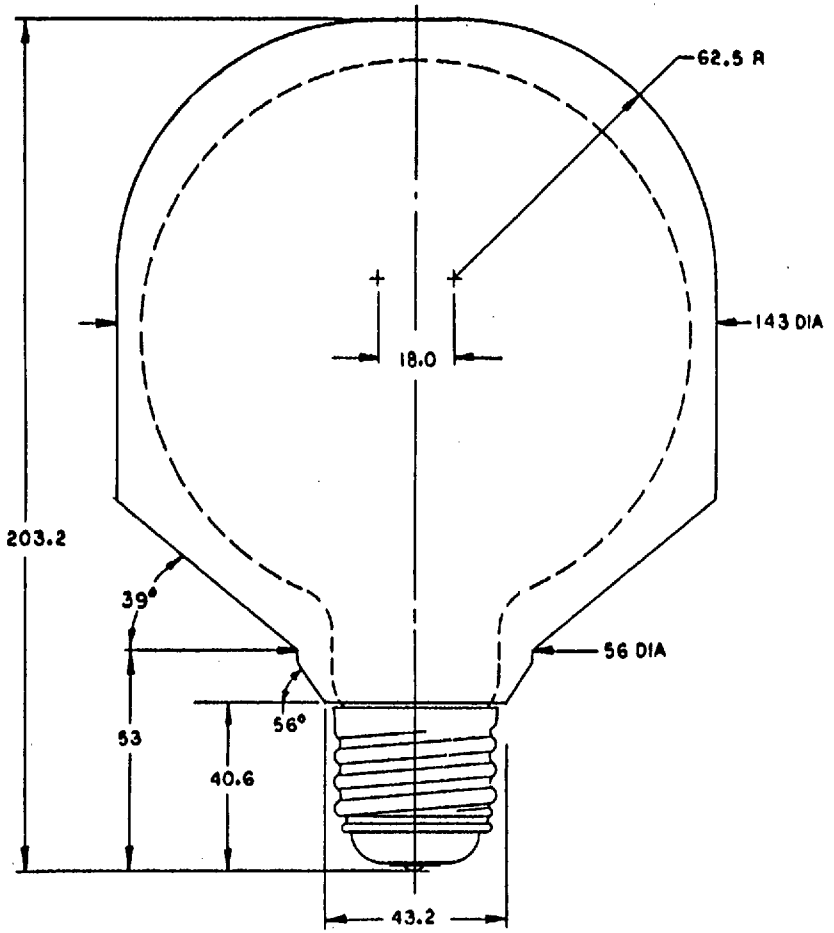

Bulb:	G40 (G127)
Base:	Mogul screw, E39/41
Overall length:	203.2 (8 in.) max 188.9 (7-7/16 in.) min
Eccentricity:	3°

NOTES
1 Some lamps may not conform to the base gauge for testing contact-making in accordance with ANSI C81.63
2 Dimensions are in millimeters, unless otherwise specified.

Figure C78.22-235

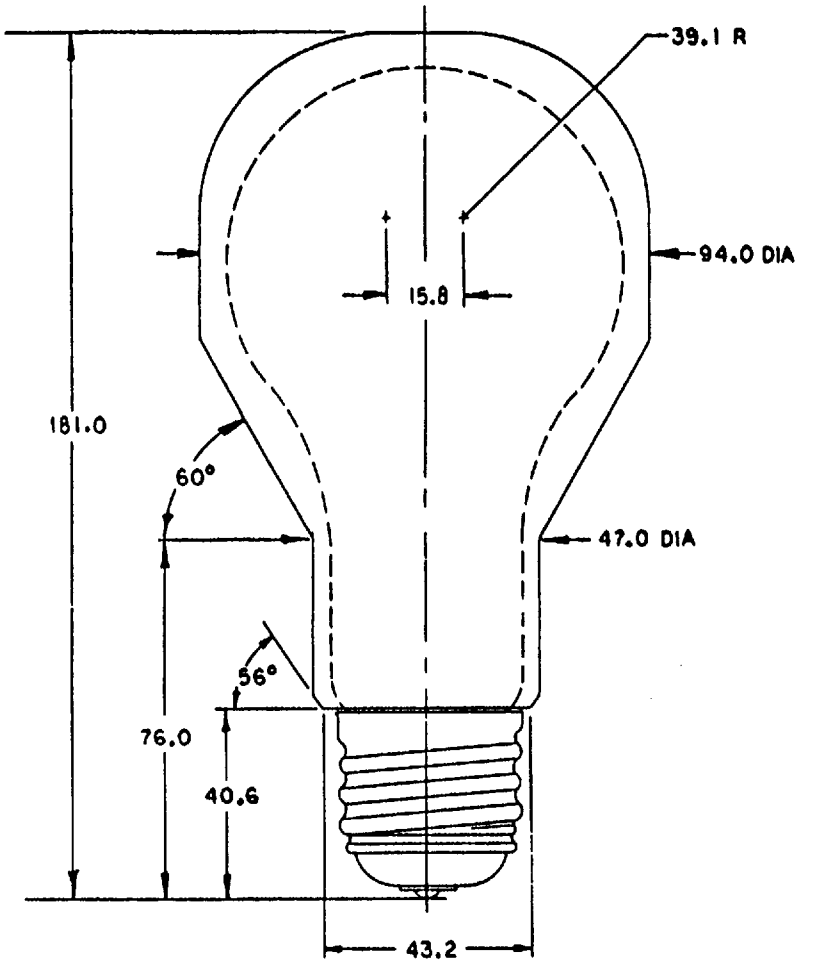

Bulb:	PS25 (PS79)
Base:	Mogul screw, E39/41
Overall length:	181.0 (7-1/8 in.) max 169.9 (6-11/16 in.) min
Eccentricity:	3°

NOTES
1 Some lamps may not conform to the base gauge for testing contact-making in accordance with ANSI C81.63
2 Dimensions are in millimeters, unless otherwise specified.

Figure C78.22-245

Part IV

Annexes

Copyright National Electrical Manufacturers Association
Provided by IHS under license with NEMA
No reproduction or networking permitted without license from IHS

Not for Resale

Copyright National Electrical Manufacturers Association
Provided by IHS under license with NEMA
No reproduction or networking permitted without license from IHS
Not for Resale

ANNEX A
(informative)

Bibliography

The revised standard ANSI C78.22-1995 contains information that was shown in the formerly designated American National Standards as follows:

Title	Former Designation
General-Service Incandescent Lamps for 120-, 125-, and 130-Volt Circuits	ANSI C78.100-1976(R1981)
General-Service Incandescent Lamps for 230- and 250-Volt Circuits	ANSI C78.101-1956(R1981)
Incandescent Lamps – Street Railway Service	ANSI C78.103-1976(R1981)
Incandescent Lamps – Spotlight and Floodlight Service, 120, 125, and 130 Volts	ANSI C78.105-1976(R1981)
Incandescent Lamps – Street Series Service	ANSI C78.214-1949(R1981)
PS-30 Bulb, Mogul Screw Base Incandescent Lamp	ANSI C78.222-1971(R1981)
Incandescent Lamps, PS-35 Bulb, Mogul Screw Base	ANSI C78.223-1949(R1981)
Incandescent Lamps, PS-40 Bulb, Mogul Screw Base	ANSI C78.224-1949(R1981)
Incandescent Lamps, PS-52 Bulb, Mogul Screw Base	ANSI C78.225-1949(R1981)
Incandescent Lamps, G-40 Bulb, Mogul Screw Base (Overall Length – Maximum 7-1/6 Inches, Minimum 6-1/2 Inches)	ANSI C78.234-1949(1981)
Incandescent Lamps, G-40 Bulb, Mogul Screw Base (Overall Length – Maximum 8 Inches, Minimum 7-7/16 Inches)	ANSI C78.235-1949(R1981)
Incandescent Lamps, PS-25 Bulb, Mogul Screw Base	ANSI C78.245-1949(R1981)

Copyright National Electrical Manufacturers Association
Provided by IHS under license with NEMA
No reproduction or networking permitted without license from IHS
Not for Resale

ANNEX B
(informative)

Bibliography

The following standards can be used in conjunction with this standard:

ANSI C81.62-1991, *American National Standard for Electrical Lamp Holders*

ANSI/UL 496-1986, *Edison-Base Lampholders*

Copyright National Electrical Manufacturers Association
Provided by IHS under license with NEMA
No reproduction or networking permitted without license from IHS
Not for Resale