ANSI C78.21a-1996
Supplement to ANSI C78.21-1995

American National Standard

Approved December 20, 1996 | Secretariat: National Electrical Manufacturers Association

for electric lamps:

Drawings for PAR 20

and PAR 30 Halogen Lamps

An American National Standard implies a consensus of those substantially concerned with its scope and provisions. It is intended as a guide to aid the manufacturer, the consumer, and the general public. The existence of an American National Standard does not in any respect preclude anyone, whether he has approved the standard or not, from manufacturing, marketing, purchasing, or using products, processes, or procedures not conforming to the standards. Users are cautioned to obtain the latest editions.
The American National Standards Institute does not develop standards and will in no circumstances give an interpretation of any American National Standard. Moreover, no person shall have the right or authority to issue an interpretation of an American National Standard in the name of the *American National Standards Institute*.
CAUTION NOTICE: This American National Standard may be revised or withdrawn at any time. The procedures of the American National Standards Institute require that action be taken periodically to reaffirm, revise, or withdraw this standard. Purchasers of American National Standards may receive current information on all standards by calling or writing the American National Standards Institute.

Copyright © 1997 by National Electrical Manufacturers Association
3 Street, Suite 1847, Rosslyn, VA 22209

First Edition
December 1997

Copyright National Electrical Manufacturers Association
Provided by IHS under license with NEMA
No reproduction or networking permitted without license from IHS
Not for Resale

ANSI C78.21a-1996
Supplement to ANSI C78.21-1995

American National Standard

Approval of an American National Standard requires verification by ANSI that the requirements for due process, consensus, and other criteria for approval have been met by the standards developer. An American National Standard implies a consensus of those substantially concerned with its scope and provisions. Consensus is established when, in the judgment of the ANSI Board of Standards Review, substantial agreement has been reached by directly and materially affected interests. Substantial agreement means much more than a simple majority, but not necessarily unanimity. Consensus requires that all views and objections be considered, and that a concerted effort be made toward their resolution. The existence of an American National Standard does not in any respect preclude anyone, whether he has approved the standard or not, from manufacturing, marketing, purchasing, or using products, processes, or procedures not conforming to the standards. It is intended as a guide to aid the manufacturer, the consumer, and the general public.

The American National Standards Institute does not develop standards and will in no circumstances give an interpretation of any American National Standard. Moreover, no person shall have the right or authority to issue an interpretation of an American National Standard in the name of the American National Standards Institute. Requests for interpretations should be addressed to the secretariat or sponsor whose name appears on this title page.

CAUTION NOTICE: This American National Standard may be revised or withdrawn at any time. The procedures of the American National Standards Institute require that action be taken periodically to reaffirm, revise, or withdraw this standard. Purchasers of American National Standards may receive current information on all standards by calling or writing the American National Standards Institute.

Published by

National Electrical Manufacturers Association

No part of this publication may be reproduced in any form, in an electronic retrieval system or otherwise, without prior written permission of the publisher.

Printed in the United States of America

Copyright © 1997 by National Electrical Manufacturers Association
1300 North 17th Street, Suite 1847, Rosslyn, VA 22209

First Edition
December 1997

Copyright National Electrical Manufacturers Association
Provided by IHS under license with NEMA
No reproduction or networking permitted without license from IHS
Not for Resale

American National Standard

ANSI C78.21-1995

American National Standard for Incandescent Lamps—PAR and R Shapes

National Electrical Manufacturers Association
1300 North 17th Street
Suite 1847
Rosslyn, VA 22209
(703) 841-3200

American National Standard

Copyright National Electrical Manufacturers Association
Provided by IHS under license with NEMA
No reproduction or networking permitted without license from IHS

Not for Resale

NEMA C78.21 95 ■ 6470247 0507186 923 ■

ANSI® C78.21-1995

AMERICAN NATIONAL STANDARD

For INCANDESCENT LAMPS — PAR and R Shapes

Secretariat C78
National Electrical Manufacturers Association

Approved January 12, 1995
American National Standards Institute

Copyright National Electrical Manufacturers Association
Provided by IHS under license with NEMA
No reproduction or networking permitted without license from IHS

Not for Resale

American National Standard

Approval of an American National Standard requires verification by ANSI that the requirements for due process, consensus, and other criteria for approval have been met by the standards developer.

Consensus is established when, in the judgment of the ANSI Board of Standards Review, substantial agreement has been reached by directly and materially affected interests. Substantial agreement means much more than a simple majority, but not necessarily unanimity. Consensus requires that all views and objections be considered, and that a concerted effort be made toward their resolution.

The use of American National Standards is completely voluntary; their existence does not in any respect preclude anyone, whether he has approved the standards or not, from manufacturing, marketing, purchasing, or using products, processes, or procedures not conforming to the standards.

The American National Standards Institute does not develop standards and will in no circumstances give an interpretation of any American National Standard. Moreover, no person shall have the right or authority to issue an interpretation of an American National Standard in the name of the American National Standards Institute. Requests for interpretations should be addressed to the secretariat or sponsor whose name appears on the title page of this standard.

CAUTION NOTICE: This American National Standard may be revised or withdrawn at any time. The procedures of the American National Standards Institute require that action be taken periodically to reaffirm, revise, or withdraw this standard. Purchasers of American National Standards may receive current information on all standards by calling or writing the American National Standards Institute.

Published by

National Electrical Manufacturers Association
1300 North 17th Street, Rosslyn, VA 22209

Copyright © 1996 National Electrical Manufacturers Association
All rights reserved.

No part of this publication may be reproduced in any form, in an electronic retrieval system or otherwise, without prior written permission of the publisher.

Printed in the United States of America

Copyright National Electrical Manufacturers Association
Provided by IHS under license with NEMA
No reproduction or networking permitted without license from IHS

Not for Resale

CONTENTS

PAGE

Foreword ii

Part I–General Information 1

Part II–Lamp Classes 7

Table 1 9

Part III–Lamp Space Drawings 15

Part IV–Product Drawings 23

Annex A 29

Annex B 30

Copyright National Electrical Manufacturers Association
Provided by IHS under license with NEMA
No reproduction or networking permitted without license from IHS
Not for Resale

Foreword (This Foreword is not part of American National Standard C78.21-1995)

This American National Standard, Incandescent Lamps–PAR and R Shapes, C78.21-1995 sets forth the physical and electrical characteristics of the group of incandescent lamps that have PAR and R shapes.

Suggestions for improvement of this standard will be welcome. They should be sent to the Secretary of Committee C78. National Electrical Manufacturers Association, 1300 North 17th Street, Suite 1847, Rosslyn, VA 22209.

This standard was processed and approved for submittal to ANSI by C78 Accredited Standards Committee on Electric Lamps, and C78-1, Incandescent Lamps. Committee approval of the standard does not necessarily imply that all committee members voted for its approval.

The members of the Committees at the time of publishing are:

Al Rousseau, C78 Chairman
Randolph N. Roy, Secretariat
Al Rousseau, Technical Coordinator
Jeanne L. Spicer, Editorial Coordinator

Organization Represented	*Name of Representative*
Advance Transformer Company	Norman Grimshaw
Duro-Test Corporation	Herbert Strauss
Edison Electric Institute (Delegate)	William Maguire
Inchcape ETL Testing Laboratory	Craig Davenport
General Electric Lighting	Ralph Kaiser
Illuminating Engineering Society	Rita Harrold
National Electrical Manufacturers Association (Delegate)	Richard Snow
OSRAM SYLVANIA INC	Peter Bleasby
Philips Lighting Company	Alfred Rousseau
Underwriters Laboratories	David Belt

William A. Murray, C78-1 Chairman
Randolph N. Roy, Secretariat

Duro-Test Corporation	Michael J. Santelli
General Electric Lighting	Charles W. Cox
	John P. Krissinger
Indy Lighting, Inc.	Ted Yahraus
OSRAM SYLVANIA INC.	David Fox
	Richard Fleegal
Philips Lighting Company	William A. Murray
	Ed Hinde
	Steven Sirek
Underwriters Laboratories, Inc.	David M. Belt
	Kevin P. Kanakos

Copyright National Electrical Manufacturers Association
Provided by IHS under license with NEMA
No reproduction or networking permitted without license from IHS
Not for Resale

Part I

General Information

Copyright National Electrical Manufacturers Association
Provided by IHS under license with NEMA
No reproduction or networking permitted without license from IHS
Not for Resale

Copyright National Electrical Manufacturers Association
Provided by IHS under license with NEMA
No reproduction or networking permitted without license from IHS

Not for Resale

American National Standard for Electric Lamps—Incandescent Lamps—PAR and R Shapes

1 Scope

This standard sets forth the physical and electrical characteristics of the group of incandescent lamps that have PAR and R bulb shapes. Lamps with clear lenses and various reflector coatings are covered. Lamps covered in this standard may contain either of two basic types of light sources; an incandescent filament or a tungsten halogen inner bulb. Sunlamps and heat lamps of the R type are included. Other lamps with discharge arc tubes are not included.

Other groups of incandescent lamps are covered in the following associated standards:

American National Standard for Electric Lamps –Incandescent Lamps–A, G, PS and Similar Shapes with E26 Medium Screw Bases, ANSI C78.20-1995

American National Standard for Electric Lamps–Incandescent Lamps–A, G, PS and Similar Shapes with E39 Medium Screw Bases, ANSI C78.22-1995

American National Standard for Electric Lamps–Incandescent Lamps–Miscellaneous Types, ANSI C78.23-1995

At the time of issuance of this standard there was no comparable standard published by the International Electrotechnical Commission (IEC).

2 Normative references

The following standards contain provisions which, through reference in this text, constitute provisions of this American National Standard. At the time of publication, the editions indicated were valid. All standards are subject to revision, and parties to agreements based on this American National Standard are encouraged to investigate the possibility of applying the most recent editions of the standards indicated below.

ANSI C78.25-1991, *Electric Lamps—Method of Measuring Lamp-Base Temperature Rise*

ANSI C78.379-1991, *Method for the Classification of the Beam Patterns of Incandescent and High Intensity Discharge Reflector Lamps*

ANSI C79.1-1980(R1994), *Nomenclature for Glass Bulbs Intended for Use with Electric Lamps*

ANSI C81.61-1990, *American National Standard for Electrical Lamp Bases*

ANSI C81.63-1991, *American National Standard for Electrical Lamp Bases and Lamp Holder Gauges*

IES LM45, *IES Approved Method for Electrical and Photometric Measurements of General Service Incandescent Filament Lamps*[1]

IES LM54, *IES Guide to Lamp Seasoning*[1]

[1] Available from the Illuminating Engineering Society, 120 Wall Street – 17th Floor, New York, NY 10005-4001.

Copyright National Electrical Manufacturers Association
Provided by IHS under license with NEMA
No reproduction or networking permitted without license from IHS Not for Resale

SR 30a, *Procedure for Use in Preparation of Incandescent Lamp Space Drawings*[2]

3 Definitions and abbreviations

In addition to bulb and base codes that are defined in the referenced standards, some terms common to the industry are utilized in this standard.

3.1 MOL (Maximum Overall Length): Distance along the lamp's axis from eyelet solder to top or face of bulb.

3.2 LCL (Light Center Length): Distance from the reference plane (eyelet solder for screw bases) to the center of the light-emitting area of the lamp.

3.3 Class: A grouping of like lamps having the same rated wattage, bulb shape, base, MOL, bulb finish, and filament type[3]; including two or more voltage ratings within a voltage range.

NOTE—Each line item in Table 1 is a class.

3.4 Voltage range: A series of rated voltages related to commonly available supply lines.

NOTE—A footnote to Table 1 lists several common voltage ranges applying to classes of lamps in this standard.

3.5 Rated wattage: The wattage marked on the lamp.

3.6 Rated voltage: The voltage marked on the lamp.

NOTE—If lamps are marked with a range voltage it shall be interpreted that they are appropriate for use on any line voltage within that range. Consult manufacturer's catalog to determine design voltage.

3.7 Base temperature rise: The surface temperature rise (above ambient) of a standard test lampholder fitted to the lamp, when measured in accordance with the standard method. See Section 9 for methods of measurement.

3.8 Service: The field of most common application for a given lighting source. Service indicated in this standard is not necessarily the only application. "Spot and floodlight" is a generic term only, used to describe either spotlight or floodlight service.

4 Lamp designations

This standard does not place any control over lamp designations. Incandescent lamps are generally designated by wattage and voltage ratings. Additional codes may be applied by the lamp manufacturers. See the lamp manufacturers' catalogs for detailed information.

5 Bulb designations

Bulb designations used in this standard are defined in ANSI C79.1. Since the traditional eighth-inch sizes have long been utilized in some lamp designations, they are so used in this standard. The metric equivalents are shown in parentheses.

---

[2] Available from the C78 Secretariat, c/o National Electrical Manufacturers Association, 1300 North 17th Street, Suite 1847, Rosslyn, VA 22209

[3] There is no attempt in this standard to identify or classify filament type.

Copyright National Electrical Manufacturers Association
Provided by IHS under license with NEMA
No reproduction or networking permitted without license from IHS
Not for Resale

Certain bulbs are noted in this standard by the bulb designation "RE." Although this is the proper designation, in accordance with ANSI C79.1, some manufacturers' literature may utilize the designation "ER."

PAR is a designation that means "parabolic aluminized reflector," but it is generally applied to all hard-glass, two-part, compact reflector lamps of a certain shape. R lamps generally are made with soft glass, but hard glass is used also. In this standard, soft glass is implied unless otherwise noted.

6 Bulb finish

6.1 Reflector

Bulbs used in PAR and R lamps usually have an internal metallic coating in the reflector section for directing a light beam out through the lens section. In certain cases, a dichroic coating system is used in the reflector section of a bulb for selective transmission of infrared energy through that area.

6.2 Lens

Only those R lamps with clear or inside-frosted lens sections are considered to be standard, unless otherwise noted. Similarly, PAR lamps with clear lenses, various stippled patterns, or molded prescriptions are standard. Colored coatings are not covered unless specifically noted.

7 Beam classification

For information on the classification of beam patterns, see ANSI C78.379.

8 Lamp drawings

8.1 Lamp space drawings in Part III

For each bulb-base-MOL category, lamp space drawings in Part III of this standard show the maximum limits of the space that may be occupied by any part of the bulb. A typical bulb shape is shown as a dashed line within that maximum space. The space shown shall accommodate the longest and shortest lamps with maximum bowl and neck diameters and maximum bulb eccentricity. These drawings were prepared in accordance with the lamp space drawing procedures in SR30a.

The following general conditions apply to the construction of these space drawings:

- Straight lines are used as much as possible to simplify the space outlines. All compromises with the actual space are in excess of the actual space required.
- All excursions of a lamp bulb are shown relative to a fixed-position base.
- Bulb eccentricity with respect to the base axis is a combination of allowances for angular tilt (skewness) and lateral displacement (true eccentricity). An eccentricity angle of 3 degrees applies generally to incandescent lamps, unless special applications require tighter limits.
- The base contact-making gauge for each type of base controls the space near the rim of the base, in the base-to-neck transition zone.
- All dimensions are in millimeters unless otherwise specified.
- The figure numbers shown in the figures and in Table 1 relate directly to the American National Standards for that category. For instance, Figure C78.21-254 is derived from the superseded standard, ANSI C78.254-1966.

8.2 Product drawings in Part IV

A different situation occurs with those lamps that are not held in place by the base-lampholder fit. These rim-mounted PAR lamps are held in place at a seating plane on the bulb, and the terminals provide only electrical continuity, not mechanical stability for the entire lamp. Drawings of such lamps are product

Copyright National Electrical Manufacturers Association
Provided by IHS under license with NEMA
No reproduction or networking permitted without license from IHS
Not for Resale

drawings (not lamp space drawings). They define the dimensions of finished lamps. Their positions and space requirements are governed by the rim-holding devices of their luminaires.

9 Methods of measurement

9.1 The method of measuring base temperature rise shall be as described in ANSI C78.25.

9.2 A method of electrical measurement of lamps can be found in IES LM45.

10 Electrical characteristics

The values of lamp voltage, current, and wattage shown in Part II are those nominal values that apply after the lamps have been seasoned. (See IES LM54 for guidelines on lamp seasoning.)

11 Requirements

11.1 Screwshell-type bases, including special gauges, shall be as described in ANSI C81.61 and ANSI C81.63.

11.2 Individual lamps shall satisfy the limits for MOL that apply to their lamp class as shown in Table 1.

11.3 All finished lamps shall have controlled dimensions, bulb size, and eccentricity such that they occupy a space within the dimensions shown in the appropriate lamp space drawing in Part III.

11.4 Finished lamps of the rim-mounted type shall comply with the dimensions shown in the product drawings in Part IV.

11.5 The average base-temperature rise of samples of a lamp of any specific rated voltage shall not be greater than the limit shown for the lamp's class in Table 1.

12 Information for luminaire design

Certain lamp types specified in Table 1 exhibit characteristics which restrict their applications. In addition, lamp manufacturers may have issued caution notices or instructions that indicate restrictions in the application of PAR and R shaped lamps. Observe the following information and the manufacturers notices.

12.1 Burning position

Certain incandescent lamps are designed for operating only in specific burning positions. Misapplication could cause overheating.

12.2 Lampholder temperature

Some of the lamps specified in Table 1 can exhibit base temperatures that are high enough to cause deterioration or damage to some lampholder materials. Those lamps should be used only in lampholders or connectors designed to withstand higher temperatures.

12.3 Base temperature

The lamp manufacturers may provide information that some lamps specified in Table 1, when used in certain luminaires, could generate enough heat to weaken the lamps' basing cement, even when the lampholders can withstand the heat. Those lamps shall be used only in luminaries designed to maintain the proper temperatures of the bases.

Copyright National Electrical Manufacturers Association
Provided by IHS under license with NEMA
No reproduction or networking permitted without license from IHS
Not for Resale

12.4 Bulb temperature

Some lamps covered by this standard operate at such high bulb temperatures that contact between the bulb and a foreign object could shatter the bulb. Avoid such contacts.

12.5 Heat in beam

Some lamps covered by this standard emit sufficient heat in their beam patterns to damage materials close by that are flammable or susceptible to heat damage. Avoid lamp operation near such materials.

12.6 Moist conditions

Metal parts of certain PAR and R lamps may become a shock hazard when moisture is present. De-energize the circuits before touching these lamps.

12.7 Protective screen

Use of a protective screen to protect persons may be advisable for some lamps.

12.8 Shielding

Tungsten halogen inner bulbs operate at high temperature and internal gas pressure above atmospheric pressure. Consequently, a bulb could shatter. Certain lamps may also emit some amount of ultra-violet radiation. Therefore, a suitable protective shield, screening technique, or both, shall be used with the luminaire to protect people and surroundings from both hazards.

An integral outer envelope, surrounding a tungsten halogen inner bulb, may satisfy this shielding requirement. See the lamp manufacturers instructions.

12.9 Accessory equipment

Certain lamps may not perform satisfactorily if accessory equipment or parts of a luminaire are attached to or touch them.

12.10 Exposure limitation

Due to the amount of energy emitted by certain lamps, such as sunlamps, the times of exposure of persons working near them may have to be limited.

12.11 Protection

Many of the lamps covered in this standard have hard-glass bulbs and can withstand the outdoor environment. Others, due to higher wattage input and hotter bulb temperature, cannot be used outdoors without the additional protection provided by an appropriate luminaire.

12.12 Special luminaires

Lamps of the cool-beam type are suitable for use only in luminaires specifically designed for those lamps.

Copyright National Electrical Manufacturers Association
Provided by IHS under license with NEMA
No reproduction or networking permitted without license from IHS
Not for Resale

Copyright National Electrical Manufacturers Association
Provided by IHS under license with NEMA
No reproduction or networking permitted without license from IHS

Not for Resale

Part II

Lamp Classes

Copyright National Electrical Manufacturers Association
Provided by IHS under license with NEMA
No reproduction or networking permitted without license from IHS

Not for Resale

Copyright National Electrical Manufacturers Association
Provided by IHS under license with NEMA
No reproduction or networking permitted without license from IHS
Not for Resale

Copyright National Electrical Manufacturers Association
Provided by IHS under license with NEMA
No reproduction or networking permitted without license from IHS
Not for Resale

Table 1–Standard lamp classes using PAR and R bulbs

Line No.	Wattage	Voltage (Note 1)	Bulb (Note 2)	Base (Note 3)	Lamp Maximum Overall Length (MOL) mm	Lamp Maximum Overall Length (MOL) in	Figure Number	Figure Location	Max. Base Temp. Rise K (Note 5)	Service
1	25	A	R14(R44)	E17	65.1	2-9/16	C78.21-265	Pt III	--	spot/floodlight
2	30	A	R20(R63)	E26	100.0	3-15/16	C78.21-254	Pt III	110	spot/floodlight
2A	45	A	PAR38(PAR121) (Hard Glass)	E26/50x39	135.0	5-5/16	C78.21-238	Pt III	75	halogen spot/ floodlight
3	50	A	R20(R63)	E26	100.0	3-15/16	C78.21-254	Pt III	140	spot/floodlight
3A	50	A	PAR20(PAR63) (Hard Glass)	E26	88.9	3-1/2	C78.21-270	Pt III	115	halogen spot/ floodlight
3B	50	A	PAR30(PAR95) (Hard Glass)	E26	92.1	3-5/8	C78.21-271	Pt III	95	halogen spot/ floodlight
3C	50	A	PAR30(PAR95) (Hard Glass)	E26	119.0	4-11/16	C78.21-272	Pt III	85	halogen spot/ floodlight
4	50	12V	PAR36(PAR114) (Hard Glass)	Sc.Ter./32x 52	69.9	2-3/4	C78.21-264	Pt IV	N/A*	spot/floodlight
5	50	A	R30(R95)	E26	136.5	5-3/8	C78.21-266	Pt III	--	spot/floodlight
6	50	A	RE30(RE95) (Note 4)	E26	161.9	6-3/8	C78.21-267	Pt III	110	spot/floodlight
6A	65	A	PAR38(PAR121) (Hard Glass)	E26/50x39	135.0	5-5/16	C78.21-238	Pt III	90	spot/floodlight
6B	65	A	R30(R95)	E26	136.5	5-3/8	C78.21-266	Pt III	--	spot/floodlight
7	75	A	R30(R95)	E26	136.5	5-3/8	C78.21-266	Pt III	125	spot/floodlight
8	75	A	RE30(RE95) (Note 4)	E26	161.9	6-3/8	C78.21-267	Pt III	130	spot/floodlight
9	75	A	R40(R127)	E26	166.7	6-9/16	C78.21-237	Pt III	110	spot/floodlight
9A	75	A	PAR30(PAR95) (Hard Glass)	E26	92.1	3-5/8	C78.21-271	Pt III	--	halogen spot/ floodlight
9B	75	A	PAR30(PAR95) (Hard Glass)	E26	119.0	4-11/16	C78.21-272	Pt III	105	halogen spot/ floodlight
10	75	A	PAR38(PAR121) (Hard Glass)	E26/50x39	135.0	5-5/16	C78.21-238	Pt III	90	spot/floodlight

Continued on next page

Table 1 (Continued)

Line No.	Wattage	Voltage (Note 1)	Bulb (Note 2)	Base (Note 3)	Lamp Maximum Overall Length (MOL) mm	Lamp Maximum Overall Length (MOL) In	Figure Number	Figure Location	Max. Base Temp. Rise K (Note 5)	Service
10A	90	A	PAR38(PAR121) (Hard Glass)	E26/50x39	135.0	5-5/16	C78.21-238	Pt III	100	halogen spot/ floodlight
11	100	A	R40(R217)	E26	166.7	6-9/16	C78.21-237	Pt III	140	spot/floodlight
12	100	A	PAR38(PAR121) (Hard Glass)	E26/50x39	135.0	5-5/16	C78.21-238	Pt III	100	spot/floodlight
12A	120	A	PAR38(PAR121) (Hard Glass)	E26/50x39	135.0	5-5/16	C78.21-238	Pt III	--	spot/floodlight
12B	120	A	RE40(RE127) (Note 4)	E26	187.3	7-3/8	C78.21-268	Pt III	110	spot/floodlight
13	150	A	PAR38(PAR121) (Hard Glass)	E26/50x39	135.0	5-5/16	C78.21-238	Pt III	175	cool beam spot/floodlight
14	150	A	PAR38(PAR121) (Hard Glass)	E26/50x39	135.0	5-5/16	C78.21-238	Pt III	125	spot/floodlight
15	150	A	R40(R127)	E26	166.7	6-9/16	C78.21-237	Pt III	140	spot/floodlight
16	200	A	PAR46(PAR146) (Hard Glass)	G12.7	101.6	4	C78.21-258	Pt IV	N/A	spot/floodlight
17	250	A	R40(R127)	E26/53x39	187.3	7-3/8	C78.21-236	Pt III	N/A	infrared
18	250	A	R40(R127)	E26	166.7	6-9/16	C78.21-237	Pt III	--	infrared
19	250	A	R40(R127) (Hard Glass)	E26	174.6	6-7/8	C78.21-256	Pt III	--	infrared

Continued on next page

Copyright National Electrical Manufacturers Association
Provided by IHS under license with NEMA
No reproduction or networking permitted without license from IHS
Not for Resale

Copyright National Electrical Manufacturers Association
Provided by IHS under license with NEMA
No reproduction or networking permitted without license from IHS

Table 1 (Continued)

Line No.	Wattage	Voltage (Note 1)	Bulb (Note 2)	Base (Note 3)	Lamp Maximum Overall Length (MOL) mm	Lamp Maximum Overall Length (MOL) In	Figure Number	Figure Location	Max. Base Temp. Rise K (Note 5)	Service
20	250	A	R40(R127) (Hard Glass)	E26/53x39	193.7	7-5/8	C78.21-257	Pt III	--	infrared
21	275	A	R40(R127) (Hard Glass)	E39	196.9	7-3/8	C78.21-269	Pt III	--	sunlamp
22	300	A	R40(R127)	E26	166.7	6-9/16	C78.21-237	Pt III	145	spot/floodlamp
23	300	A	R40(R127) (Hard Glass)	E39	184.2	7-1/4	C78.21-255	Pt III	--	spot/floodlight
24	300	A	PAR56(PAR178) (Hard Glass)	G16d/12x52	127.0	5	C78.21-259	Pt IV	N/A	spot/floodlight
25	375	A	R40(R127)	E26/53x39	187.3	7-3/8	C78.21-236	Pt III	--	infrared
26	375	A	R40(PAR127) (Hard Glass)	E26/53x39	193.7	7-5/8	C78.21-257	Pt III	--	infrared
27	500	A	R40(PAR127) (Hard Glass)	E39	184.2	7-1/4	C78.21-255	Pt III	--	spot/floodlight
28	500	A	PAR64(PAR203) (Hard Glass)	G16d/32x52	152.5	6	C78.21-263	Pt IV	N/A	spot/floodlight

NOTES

1 Common lamp voltage ratings for voltage code: A = 120V, 115-125V, 125V, 130V, etc.

2 Standard lens finishes are clear or inside frost. Reflector sections have an internal metallic coating or dichroic coating.

3 Common American terminology for the base codes: E17 = intermediate screw base, E26 = medium screw base, E26/50x39 and E26/59x39 = skirted medium screw base, G12.7 = medium side prong, G16d/12x52 = mogul end-prong, G16d/32x52 = extended mogul end-prong, Sc. Ter. = Screw terminal.

4 "RE" bulbs are also commonly labeled "ER."

5 See 3.7 and 9.1 Base temperature rise data on other wattages are being collected.

Not for Resale

Copyright National Electrical Manufacturers Association
Provided by IHS under license with NEMA
No reproduction or networking permitted without license from IHS
Not for Resale

Part III

Lamp Space Drawings

Copyright National Electrical Manufacturers Association
Provided by IHS under license with NEMA
No reproduction or networking permitted without license from IHS

Not for Resale

Copyright National Electrical Manufacturers Association
Provided by IHS under license with NEMA
No reproduction or networking permitted without license from IHS

Not for Resale

Copyright National Electrical Manufacturers Association
Provided by IHS under license with NEMA
No reproduction or networking permitted without license from IHS
Not for Resale

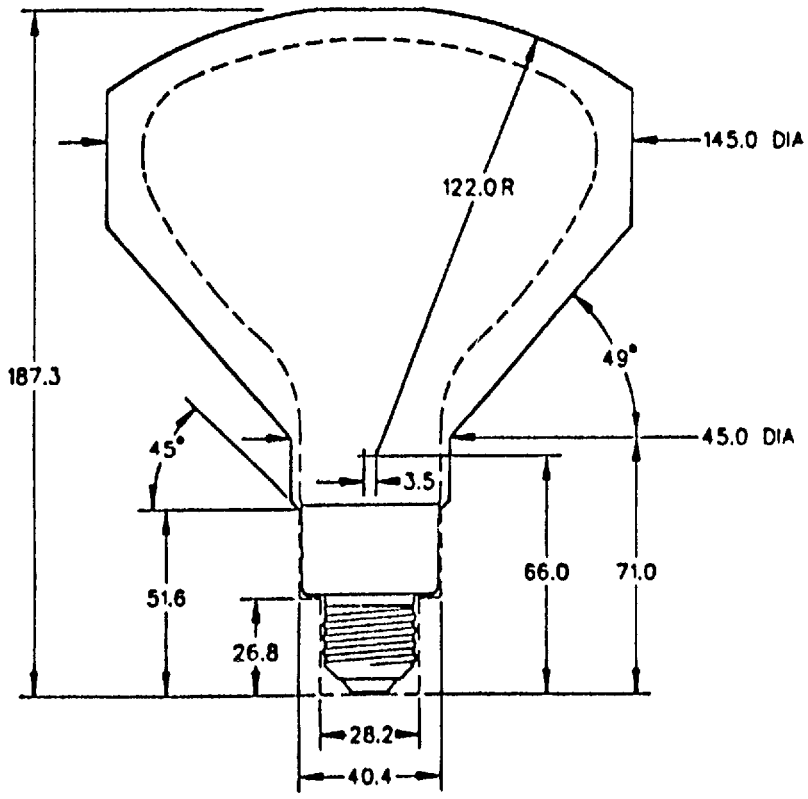

Bulb:	R40(R127)
Base:	Special Skirted Medium Screw, E26/53x39
Overall Length:	187.3 (7-3/8 in.) max 171.5 (6-3/4 in.) min
Eccentricity:	3°

NOTES Dimensions are in millimeters unless otherwise specified.

Figure C78.21-236

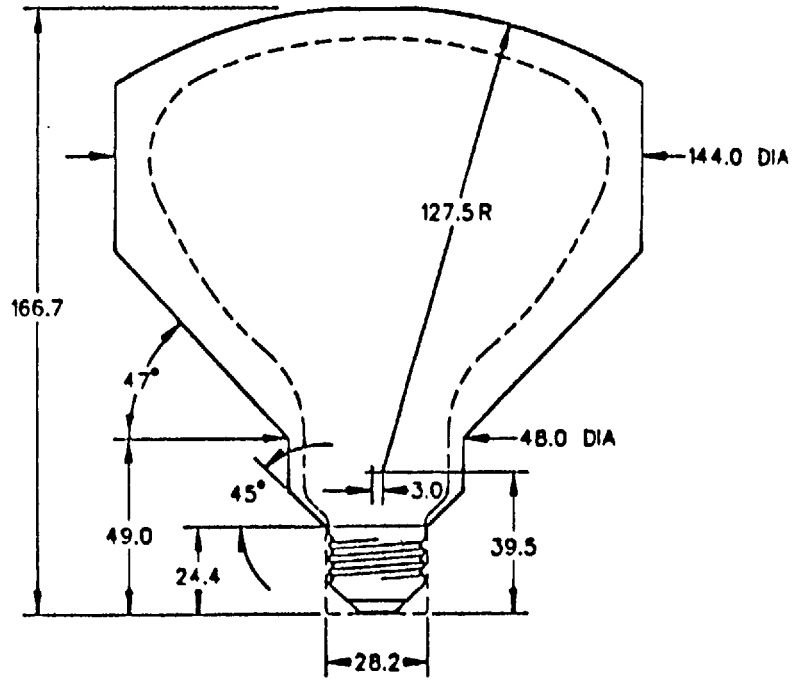

Bulb:	R40(R127)
Base:	Medium Screw, E26/24
Overall Length:	166.7 (6-9/16 in.) max 150.8 (5-15/16 in.) min
Eccentricity:	3°

NOTES Dimensions are in millimeters unless otherwise specified.

Figure C78.21-237

Copyright National Electrical Manufacturers Association
Provided by IHS under license with NEMA
No reproduction or networking permitted without license from IHS

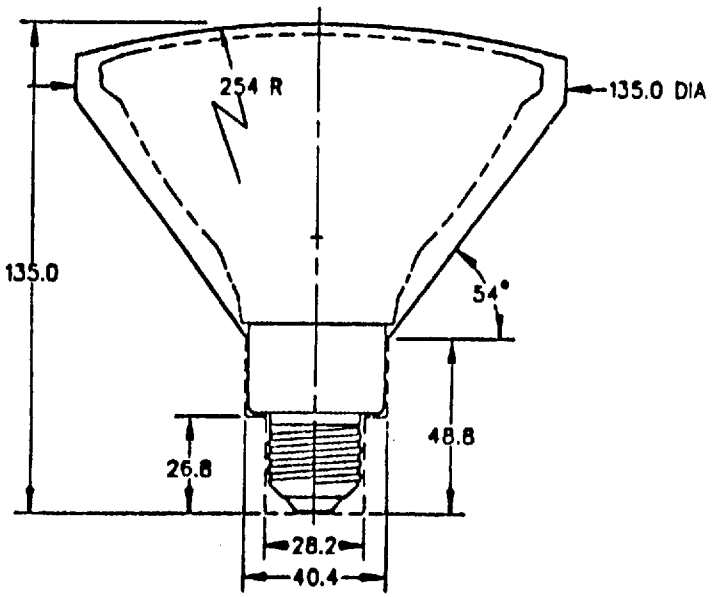

Bulb:	PAR38(PAR121)
Base:	Skirted Medium Screw, E26/50x39
Overall Length:	135.0 (5-5/16 in.) max 127.8 (5-1/32 in.) min
Eccentricity:	3°

NOTES Dimensions are in millimeters unless otherwise specified.

Figure C78.21-238

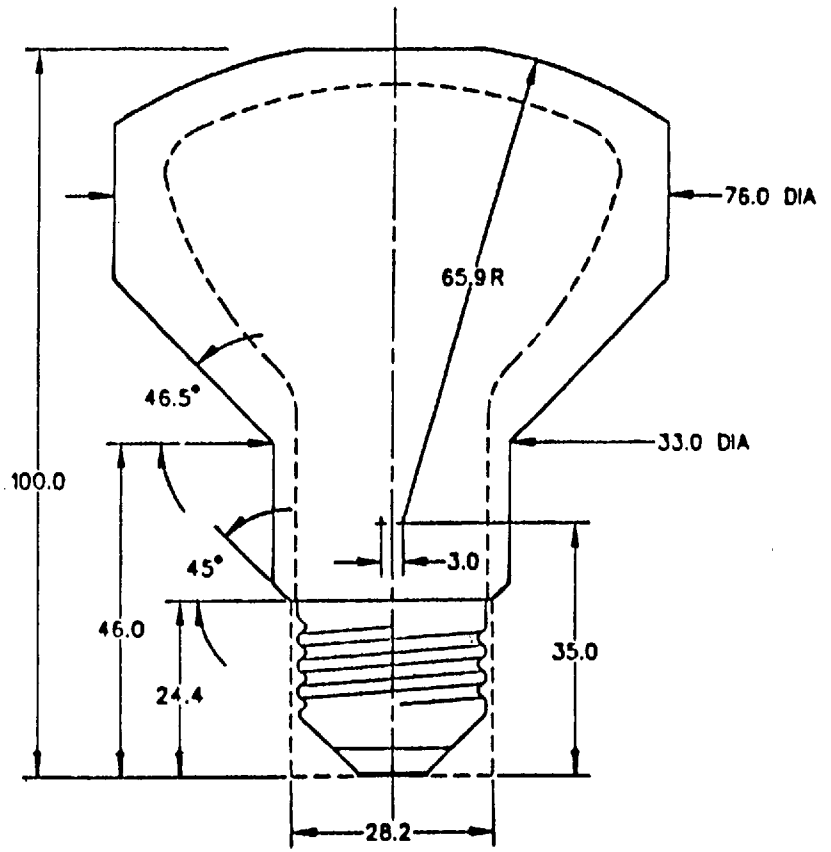

Bulb:	R20(R63)
Base:	Medium Screw, E26/24
Overall Length:	100.0 (3-15/16 in.) max 90.4 (3-9/16 in.) min
Eccentricity:	3°

NOTES• Dimensions are in millimeters unless otherwise specified.

Figure C78.21-254

Not for Resale

Copyright National Electrical Manufacturers Association
Provided by IHS under license with NEMA
No reproduction or networking permitted without license from IHS

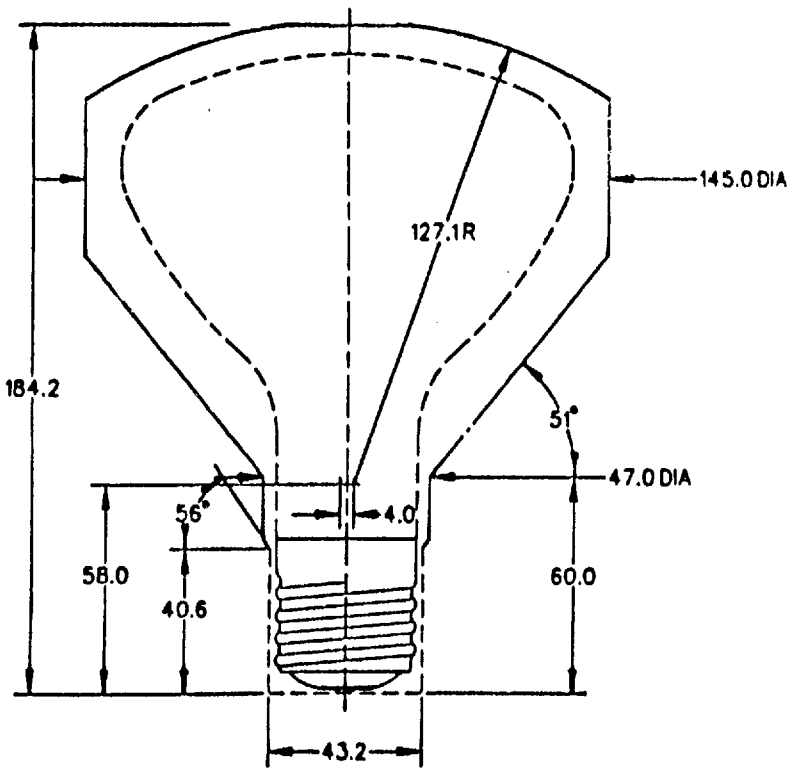

Bulb:	R40(R127)
Base:	Mogul Screw, E39/41
Overall Length:	184.2 (7-1/4 in.) max 168.3 (6-5/8 in.) min
Eccentricity:	3°

NOTES Dimensions are in millimeters unless otherwise specified.

Figure C78.21-255

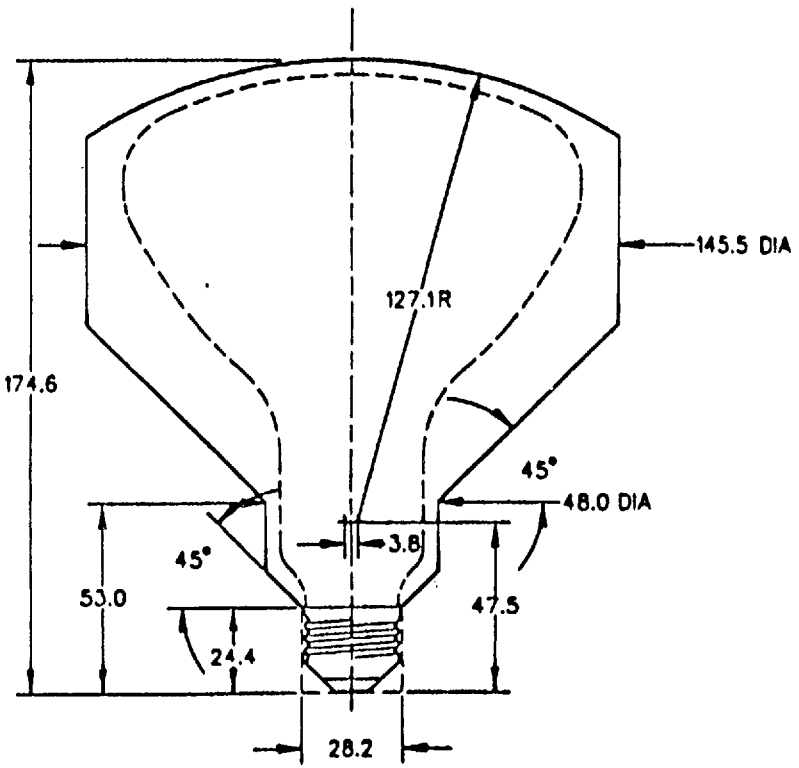

Bulb:	R40(R127)
Base:	Medium Screw, E26/24
Overall Length:	174.6 (6-7/8 in.) max 158.8 (6-1/4 in.) min
Eccentricity:	3°

NOTES Dimensions are in millimeters unless otherwise specified.

Figure C78.21-256

Not for Resale

Copyright National Electrical Manufacturers Association
Provided by IHS under license with NEMA
No reproduction or networking permitted without license from IHS

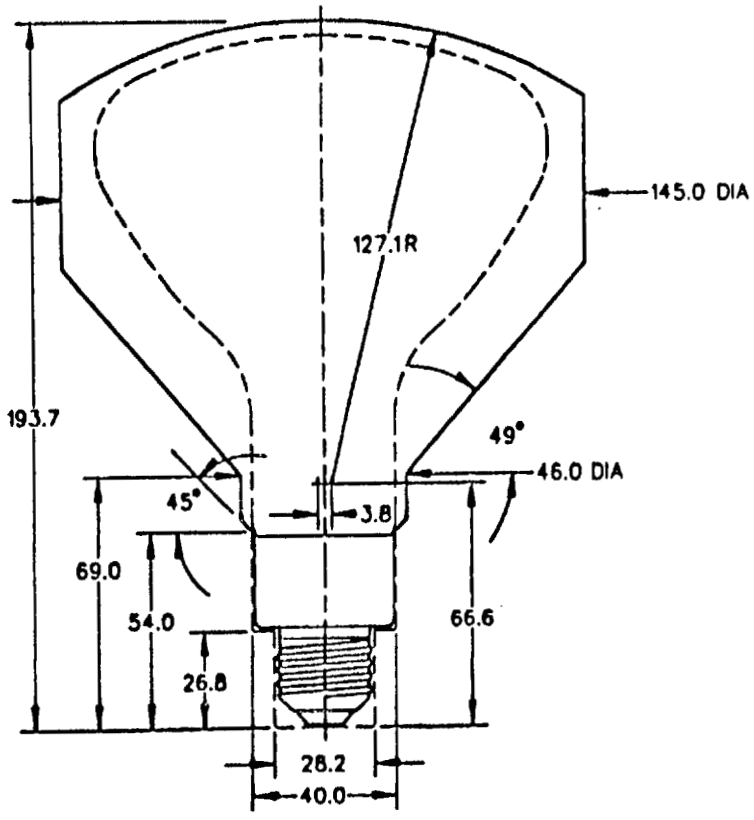

Bulb:	R40(R127)
Base:	Special Skirted Medium Screw, E26/53x39
Overall Length:	193.7 (7-5/8 in.) max 177.8 (7 in.) min
Eccentricity:	3°

NOTES Dimensions are in millimeters unless otherwise specified.

Figure C78.21-257

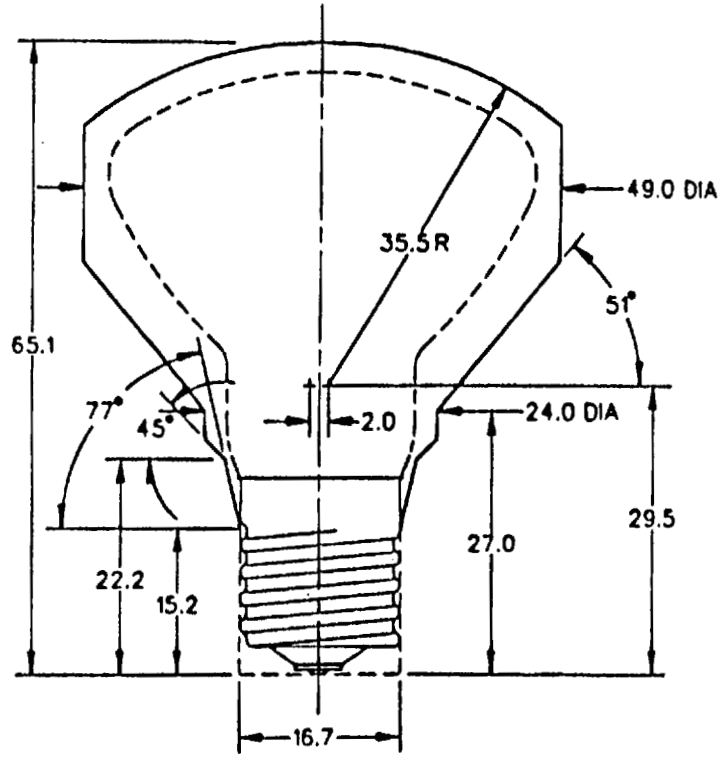

Bulb:	R14(R44)
Base:	Intermediate Screw, E17/20
Overall Length:	65.1 (2-9/16 in.) max 59.0 (2-5/16 in.) min
Eccentricity:	3°

NOTES Dimensions are in millimeters unless otherwise specified.

Figure C78.21-265

Not for Resale

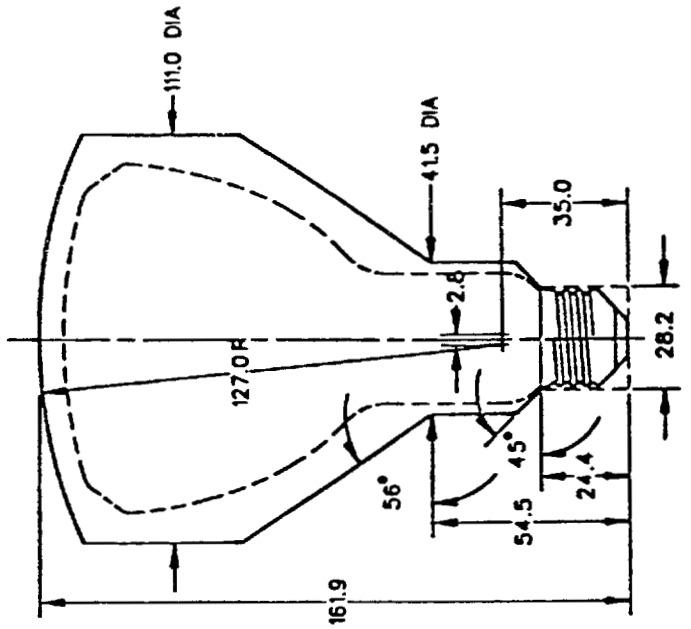

Bulb: RE30(RE95)
Base: Medium Screw, E26/24
Overall Length: 161.9 (6-3/8 in.) max
149.2 (5-7/8 in.) min
Eccentricity: 3°

NOTES Dimensions are in millimeters unless otherwise specified.

Figure C78.21-267

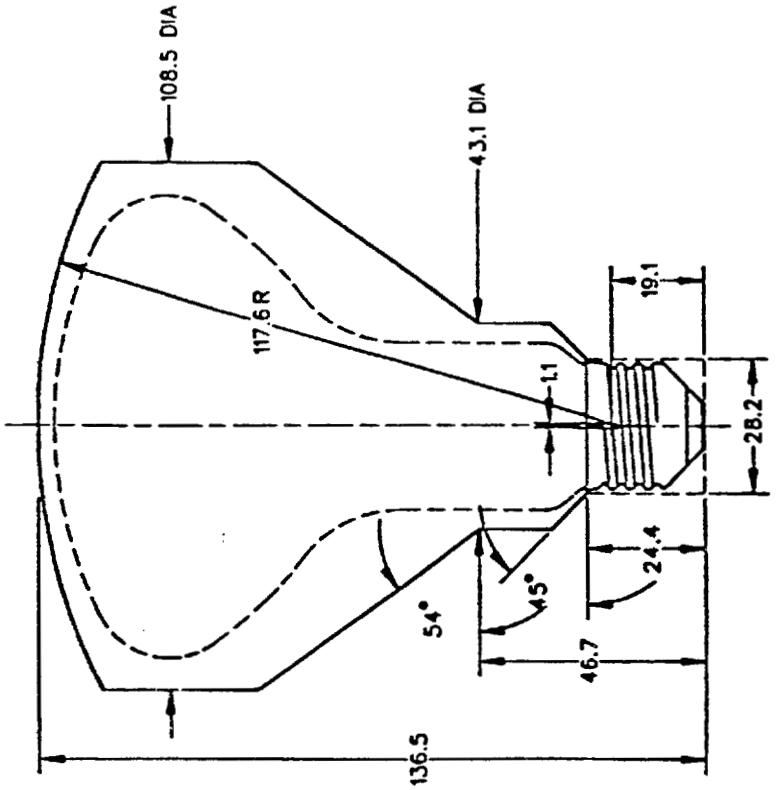

Bulb: R30(R95)
Base: Medium Screw, E26/24
Overall Length: 136.5 (5-3/8 in.) max
123.8 (4-7/8 in.) min
Eccentricity: 3°

NOTES Dimensions are in millimeters unless otherwise specified.

Figure C78.21-266

Copyright National Electrical Manufacturers Association
Provided by IHS under license with NEMA
No reproduction or networking permitted without license from IHS

Not for Resale

Copyright National Electrical Manufacturers Association
Provided by IHS under license with NEMA
No reproduction or networking permitted without license from IHS

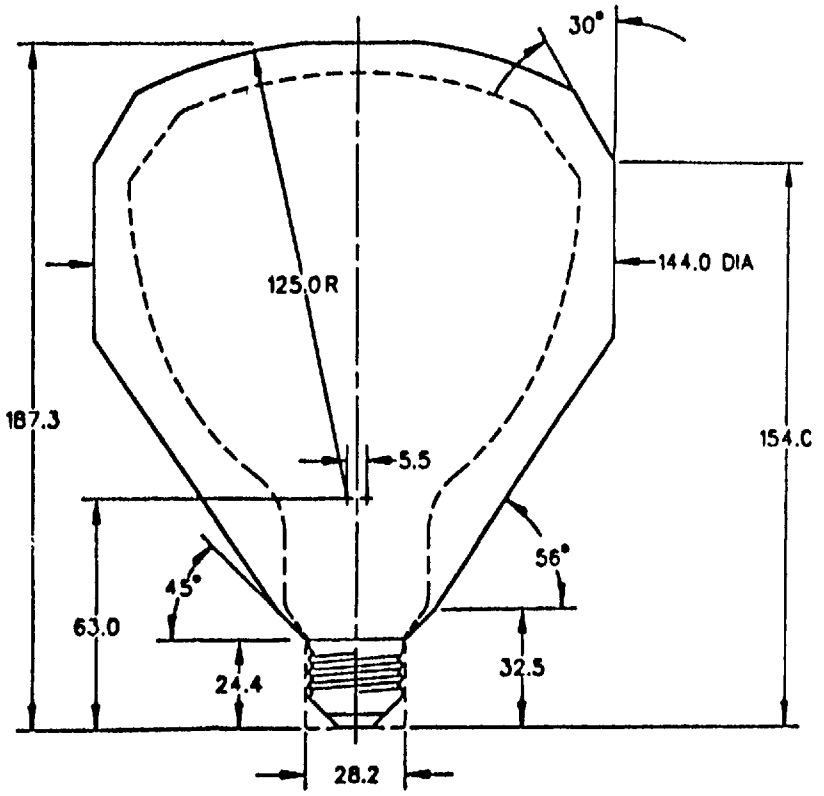

Bulb:	RE40(RE127)
Base:	Medium Screw, E26/24
Overall Length:	187.3 (7-3/8 in.) max
	171.5 (6-3/4 in.) min
Eccentricity:	3°

NOTES Dimensions are in millimeters unless otherwise specified.

Figure C78.21-268

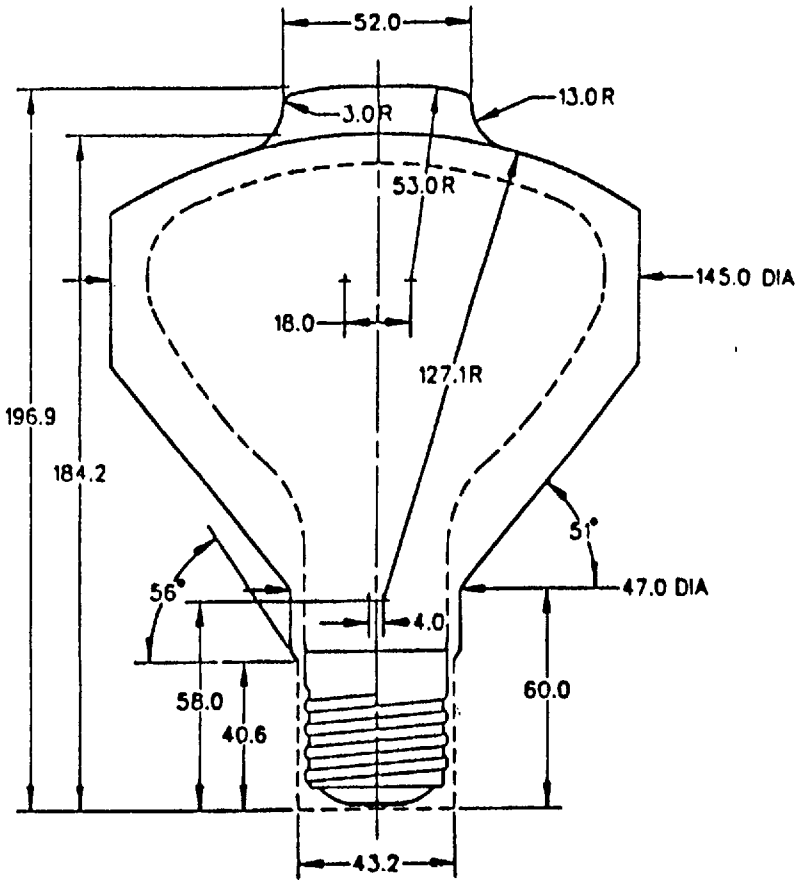

Bulb:	R40(R127)
Base:	Medium Screw, E39/41
Overall Length:	196.9 (7-3/4 in.) max
	168.3 (6-5/8 in.) min without protrusion
Eccentricity:	3°

NOTES
1 This lamp does not have to include an extra dimple on top of the bulb.
2 Dimensions are in millimeters unless otherwise specified.

Figure C78.21-269

Not for Resale

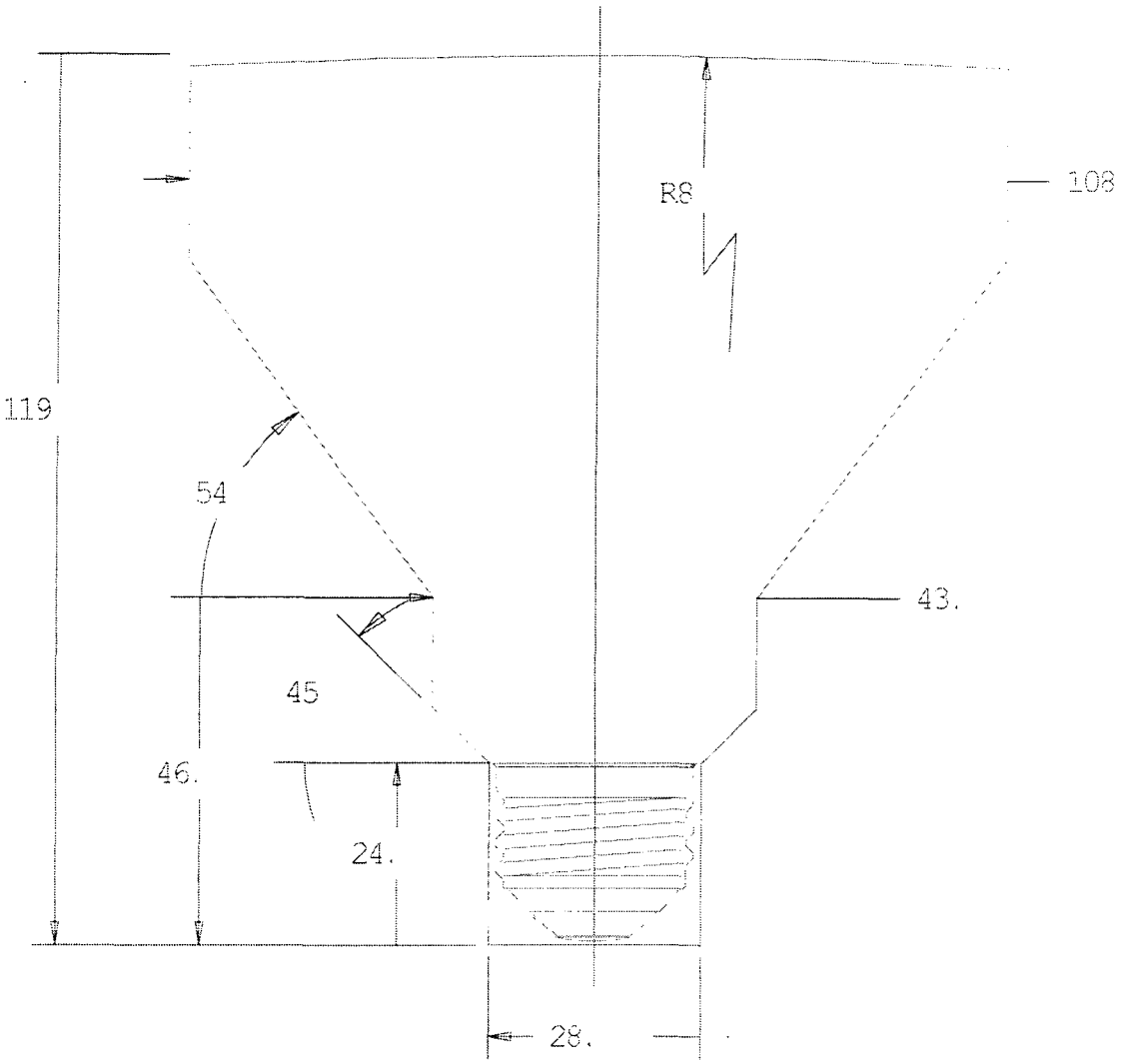

Bulb:	PAR30 (PAR95) Long Neck
Base:	Medium Screw, E26/24
Maximum Overall Length:	119.0 (4-11/16 in.) Max.
Minimum Overall Lentgh:	109.2 (4-5/16 in.) Min.
Eccentricity:	3°

Notes: Dimensions are in millimeters unless otherwise

C78.21-275

Copyright © 1997 by National Electrical Manufacturers Association
1300 North 17th Street, Suite 1847, Rosslyn, VA 22209

Copyright National Electrical Manufacturers Association
Provided by IHS under license with NEMA
No reproduction or networking permitted without license from IHS
Not for Resale

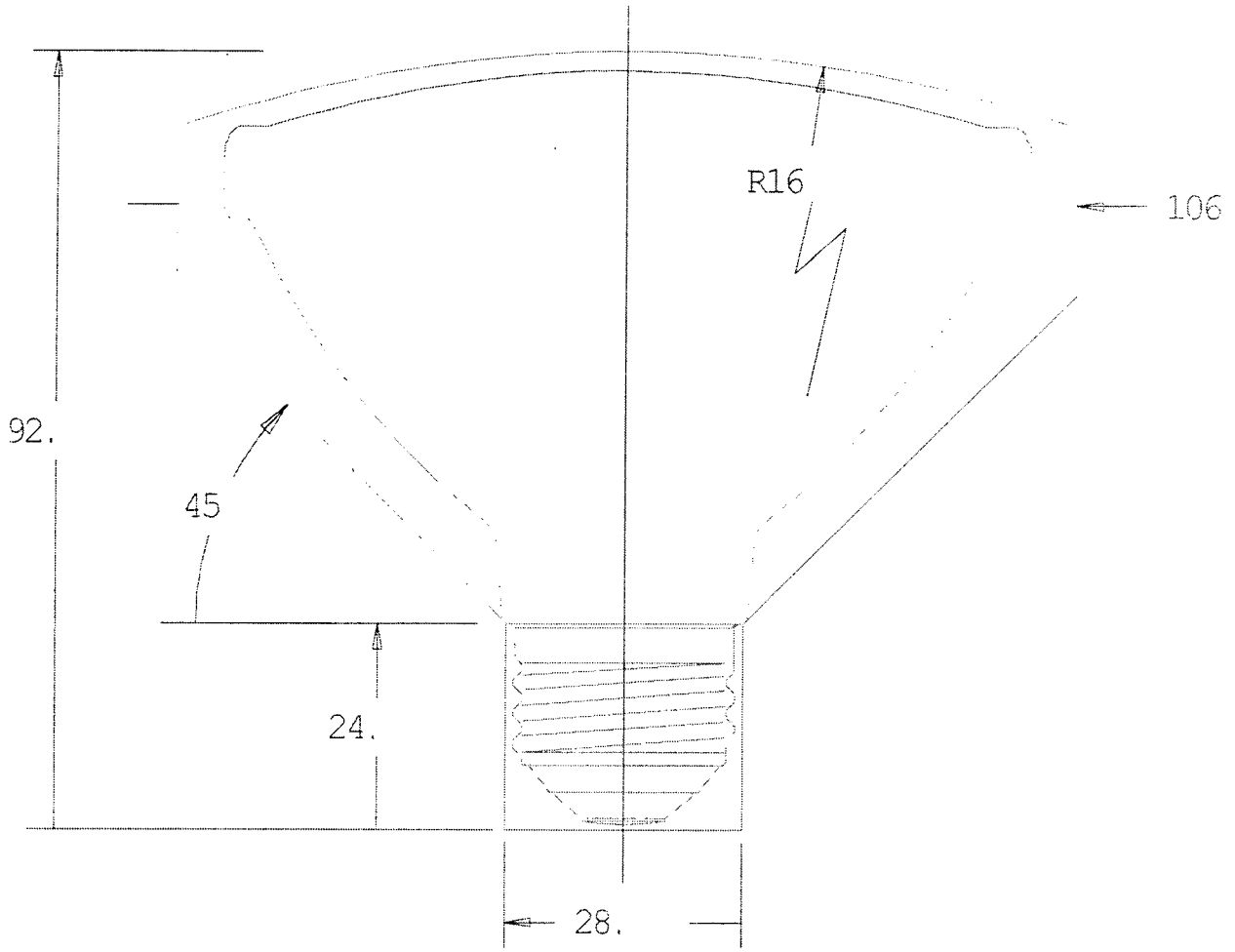

Bulb:	PAR30 (PAR95) Short Neck
Base:	Medium Screw, E26/24
Maximum Overall Length:	92.0 (3-5/8 in.) Max.
Minimum Overall Lentgh:	82.0 (3-1/4 in.) Min.
Eccentricity:	3°

Notes: Dimensions are in millimeters unless otherwise

C78.21-276

Copyright © 1997 by National Electrical Manufacturers Association
1300 North 17th Street, Suite 1847, Rosslyn, VA 22209

First Edition
December 1997

Copyright National Electrical Manufacturers Association
Provided by IHS under license with NEMA
No reproduction or networking permitted without license from IHS
Not for Resale

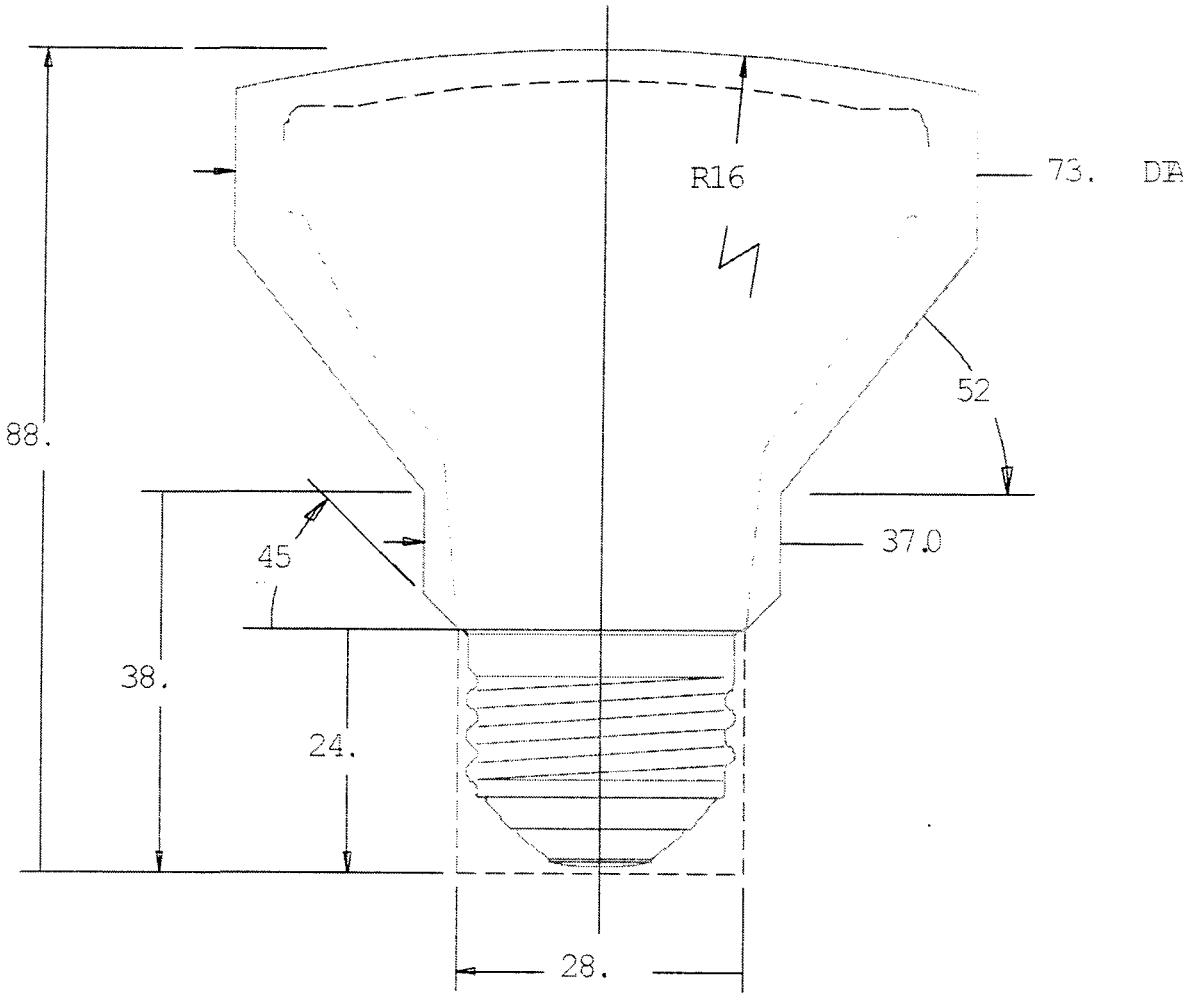

Bulb	PAR20 (PAR63)
Base	Medium Screw, E26/24
Maximum Overall Length	88.9 (3-1/2 in.) max.
Minimum Overall Length	73.0 (2-7/8 in.) min.
Eccentricity	3°

C78.21-277

Copyright © 1997 by National Electrical Manufacturers Association
1300 North 17th Street, Suite 1847, Rosslyn, VA 22209

Copyright National Electrical Manufacturers Association
Provided by IHS under license with NEMA
No reproduction or networking permitted without license from IHS
Not for Resale

THIS PAGE INTENTIONALLY

LEFT BLANK

Copyright © 1997 by National Electrical Manufacturers Association
1300 North 17th Street, Suite 1847, Rosslyn, VA 22209

First Edition
December 1997

Copyright National Electrical Manufacturers Association
Provided by IHS under license with NEMA
No reproduction or networking permitted without license from IHS

Not for Resale

Part IV

Product Drawings

Copyright National Electrical Manufacturers Association
Provided by IHS under license with NEMA
No reproduction or networking permitted without license from IHS

Not for Resale

Copyright National Electrical Manufacturers Association
Provided by IHS under license with NEMA
No reproduction or networking permitted without license from IHS

Not for Resale

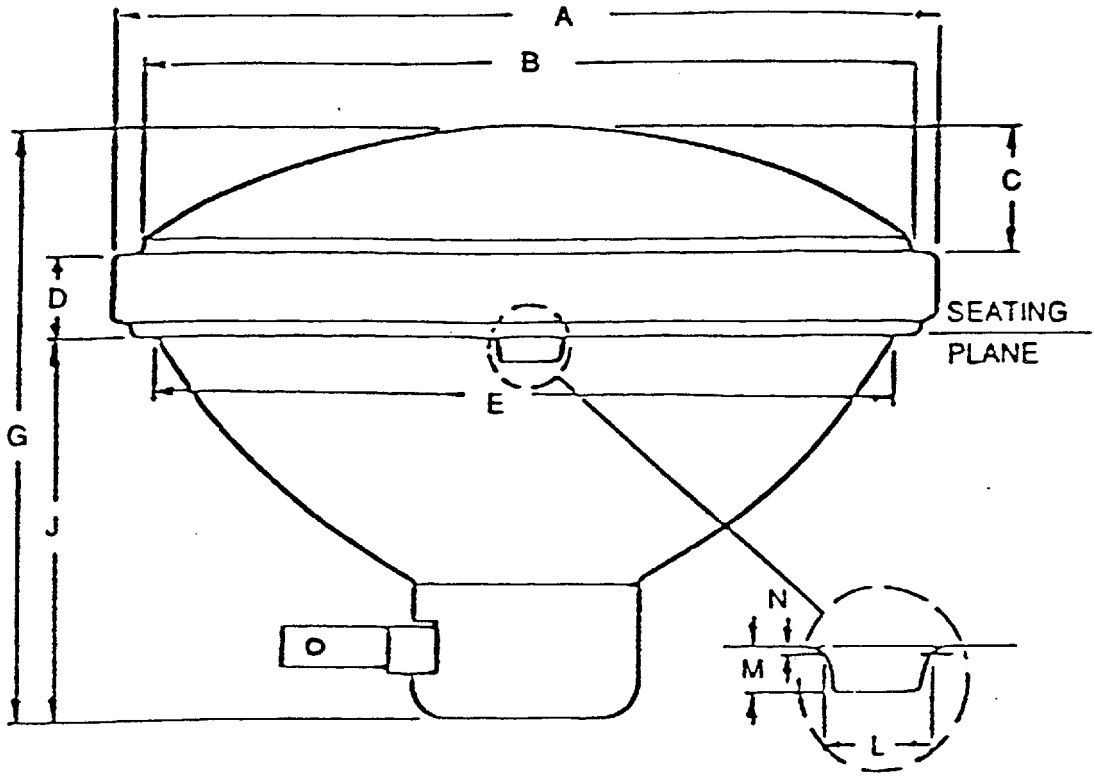

Labels in Drawings	Standard Dimension (inches)		Nearest Metric Equivalent (millimeters)	
	Min.	Max.	Min.	Max.
A	5.6	5.7	142.2	144.8
B	–	5.26	–	133.7
C	–	0.92	–	23.4
D	0.49	0.53	12.5	13.5
E	–	5.1	–	129.5
G	–	4	–	101.6
J	–	2.75	–	69.9
L	0.415	0.440	10.54	11.18
M	0.135	0.165	3.43	4.19
N	0.030 Nominal		0.76 Nominal	

NOTE—The spacing and basic design of the G12.7 base contacts are similar to the folded blade construction of a two pole, two wire attachment plug shown in UL817 and ANSI/NEMA WD 6. See these documents for other contact design options.

Figure C78.21-258

Copyright National Electrical Manufacturers Association
Provided by IHS under license with NEMA
No reproduction or networking permitted without license from IHS
Not for Resale

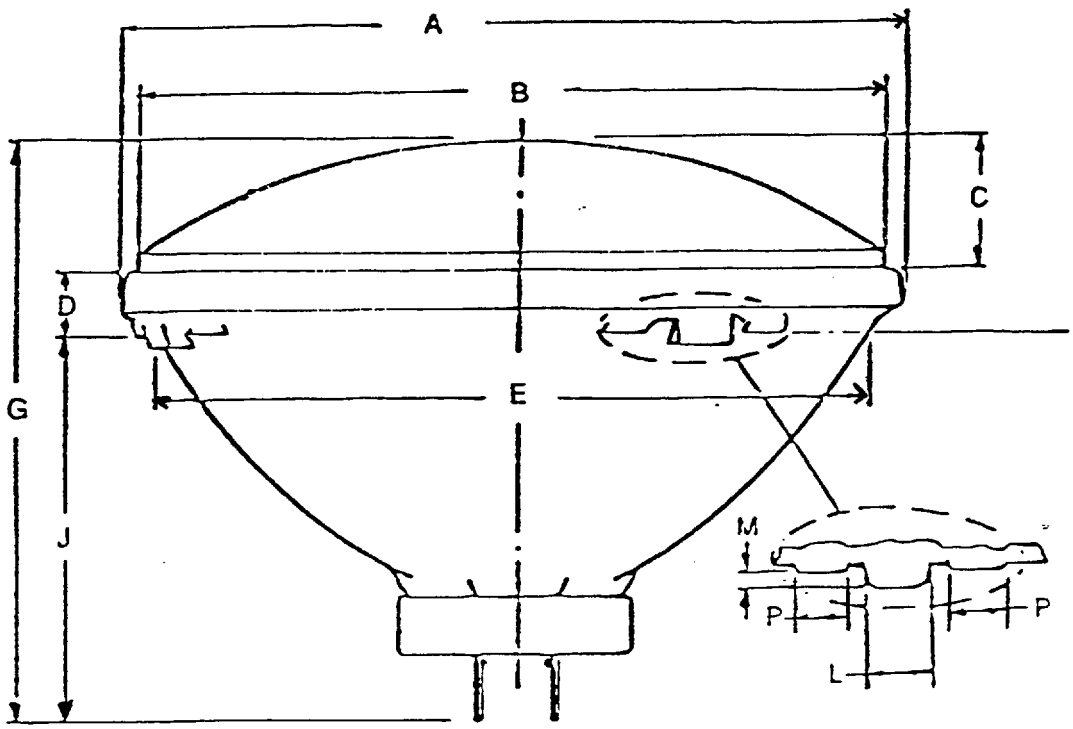

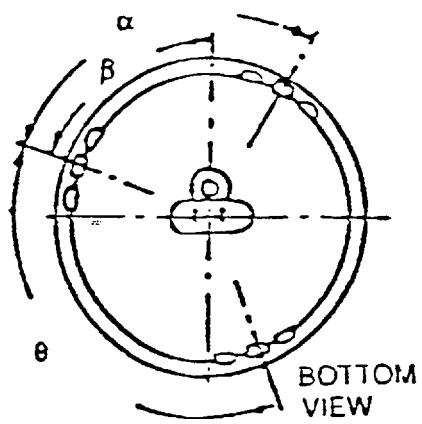

Labels in Drawings	Standard Dimension (inches) Min.	Max.	Nearest Metric Equivalent (millimeters) Min.	Max.
A	7.000	7.031	177.80	178.59
B	–	6.687	–	169.85
C	–	1.15	–	29.2
D	0.460	0.540	11.68	13.72
E	–	6.380	–	162.05
G	–	5	–	127.0
J	–	3.5	–	88.9
L	0.516	0.575	13.1	14.6
M	0.105	–	2.7	–
P	0.475	0.525	12.1	13.3
α	99°30'	100°30'	–	–
ß	69	71	–	–
θ	129°30'	130°30'	–	–

Bulb: PAR56(PAR178)
Base: GX16d/12x52 Mogul End-Prong
Maximum Overall Length: 127.0 mm(5.0 in.)

Figure C78.21-259

Copyright National Electrical Manufacturers Association
Provided by IHS under license with NEMA
No reproduction or networking permitted without license from IHS
Not for Resale

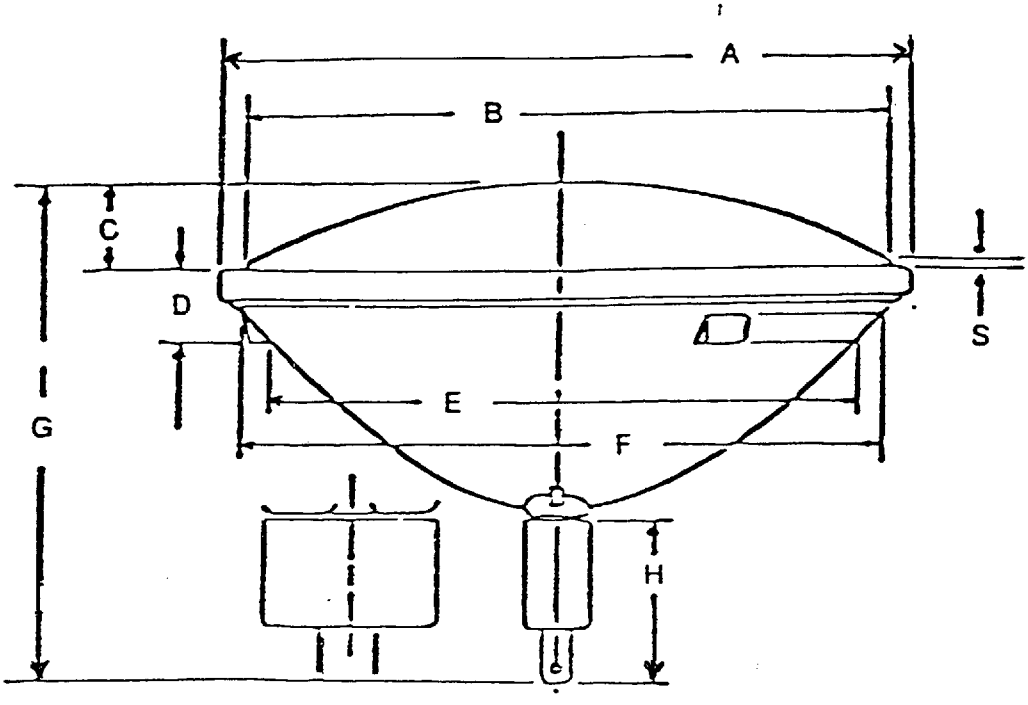

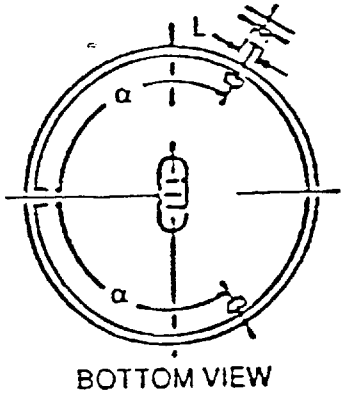

BOTTOM VIEW

Labels in Drawings	Standard Dimension (inches)		Nearest Metric Equivalent (millimeters)	
	Min.	Max.	Min.	Max.
A	7.970	8.100	202.44	205.74
B	7.660	7.690	194.56	195.33
C	–	1.305	–	33.15
D	0.885	0.975	22.48	24.77
E	–	7.040	–	178.82
F	–	7.620	–	193.55
G	–	6.000	–	152.40
H	–	1.816	–	46.13
L	0.550	0.575	13.97	14.61
S	0.090 Nominal		2.3 Nominal	
α	119.5°	120.5°	–	–

Bulb: PAR64(PAR203)
Base: GX16d/32x52 Extended Mogul End-Prong
Maximum Overall Length: 152.4 mm(6.0 in.)

Copyright National Electrical Manufacturers Association
Provided by IHS under license with NEMA
No reproduction or networking permitted without license from IHS
Not for Resale

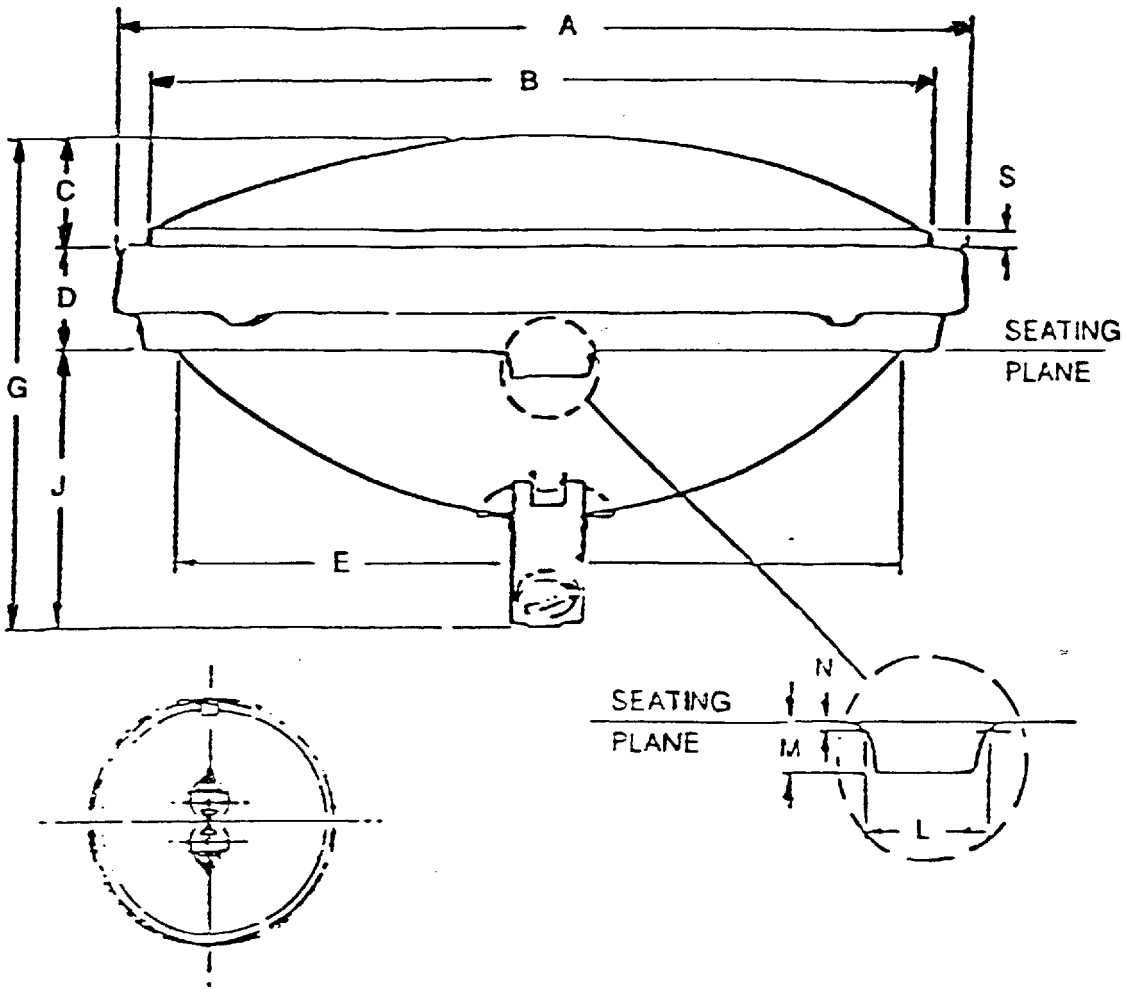

Labels in Drawings	Standard Dimension (inches) Min.	Max.	Nearest Metric Equivalent (millimeters) Min.	Max.
A	4.360	4.460	110.74	113.28
B	–	4.050	–	102.87
C	–	0.59	–	15.0
D	0.485	0.565	12.32	14.35
E	–	3.85	–	97.8
G	–	2.75	–	69.9
J	–	1.625	–	41.3
L	0.415	0.440	10.54	11.18
M	0.135	0.165	3.43	4.19
N	0.030 Nominal		0.76 Nominal	
S	0.078	0.140	1.98	3.56

Figure C78.21-264

Copyright National Electrical Manufacturers Association
Provided by IHS under license with NEMA
No reproduction or networking permitted without license from IHS
Not for Resale

Annex A
(informative)
Former designation of C78 incandescent lamp standards

The revised standard ANSI C78.21-1995 contains information that was shown in the formerly designated American National Standards:

Title	Former designation
Infrared Lamps for 115–125V Service	C78.106-1962(R1981)
Incandescent Lamps–Projector and Reflector Spot and Flood, 120, 125, and 130 Volts	C78.107-1976(R1981)
R-40 Bulb (Soft Glass), Medium Skirted Screw Base Incandescent Lamps	C78.236-1963(R1981)
R-40 Bulb (Soft Glass) Medium Screwbase Incandescent Lamps	C78.237-1962(R1981)
Incandescent Lamps, Screw Base PAR-18 Bulb, Medium Skirted	C78.238-1949(R1981)
R-30 Bulb Medium Screw Base Incandescent Lamps	C78.251-1966(R1981)
R-20 Bulb Medium Screw Base Incandescent Lamps	C78.254-1966(R1981)
R-40 Bulb (Hard Glass), Mogul Screw Base, Incandescent Lamps	C78.255-1973(R1981)
R-40 Bulb (Hard Glass), Medium Screw Incandescent Lamps	C78.256-1962(R1981)
R-40 Bulb (Hard Glass), Medium Skirted Screw Base Incandescent Lamps	C78.257-1962(R1981)
PAR 46 Bulb, Medium Side Prong Base, Incandescent Lamps	C78.258-1966(R1981)
PAR 56 Bulb, Mogul End Prong Base, Incandescent Lamps	C78.259-1966(R1981)

Copyright National Electrical Manufacturers Association
Provided by IHS under license with NEMA
No reproduction or networking permitted without license from IHS
Not for Resale

Annex B
(informative)

The following standards can be used in conjunction with this standard:

ANSI C81.62-1991, *American National Standard for Electrical Lamp Holders*

ANSI/NEMA WD 6-1988, *Wiring Devices-Dimensional Requirements*

ANSI/UL 496-1986, *Edison-Base Lampholders*

ANSI/UL 817-1986, *Cord Sets and Power Supply Cords*

Copyright National Electrical Manufacturers Association
Provided by IHS under license with NEMA
No reproduction or networking permitted without license from IHS
Not for Resale