American National Standard

ANSI C78.20-1995

American National Standard for Incandescent Lamps— A, G, PS, and Similar Shapes with E26 Medium Screw Bases

NEMA

National Electrical Manufacturers Association
1300 North 17th Street
Suite 1847
Rosslyn, VA 22209
(703) 841-3200

American National Standard

Copyright National Electrical Manufacturers Association
Provided by IHS under license with NEMA
No reproduction or networking permitted without license from IHS

Not for Resale

NEMA C78.20 95 ■ 6470247 0507142 6T1 ■

ANSI® C78.20-1995

AMERICAN NATIONAL STANDARD

for INCANDESCENT LAMPS—
A, G, PS, and Similar Shapes with E26 Medium Screw Bases

Secretariat
National Electrical Manufacturers Association

Approved January 12, 1995
American National Standards Institute, Inc.

Copyright National Electrical Manufacturers Association
Provided by IHS under license with NEMA
No reproduction or networking permitted without license from IHS

Not for Resale

American National Standard

Approval of an American National Standard requires verification by ANSI that the requirements for due process, consensus, and other criteria for approval have been met by the standards developer.

Consensus is established when, in the judgment of the ANSI Board of Standards Review, substantial agreement has been reached by directly and materially affected interests. Substantial agreement means much more than a simple majority, but not necessarily unanimity. Consensus requires that all views and objections be considered, and that a concerted effort be made toward their resolution.

The use of American National Standards is completely voluntary; their existence does not in any respect preclude anyone, whether he has approved the standards or not, from manufacturing, marketing, purchasing, or using products, processes, or procedures not conforming to the standards.

The American National Standards Institute does not develop standards and will in no circumstances give an interpretation of any American National Standard. Moreover, no person shall have the right or authority to issue an interpretation of an American National Standard in the name of the American National Standards Institute. Requests for interpretations should be addressed to the secretariat or sponsor whose name appears on the title page of this standard.

CAUTION NOTICE: This American National Standard may be revised or withdrawn at any time. The procedures of the American National Standards Institute require that action be taken periodically to reaffirm, revise, or withdraw this standard. Purchasers of American National Standards may receive current information on all standards by calling or writing the American National Standards Institute.

Published by

National Electrical Manufacturers Association
1300 North 17th Street, Suite 1847, Rosslyn, VA 22209

Copyright © 1996 National Electrical Manufacturers Association
All rights reserved.

No part of this publication may be reproduced in any form, in an electronic retrieval system or otherwise, without prior written permission of the publisher.

Printed in the United States of America

Copyright National Electrical Manufacturers Association
Provided by IHS under license with NEMA
No reproduction or networking permitted without license from IHS

Not for Resale

ANSI C78.20-1995

Copyright National Electrical Manufacturers Association
Provided by IHS under license with NEMA
No reproduction or networking permitted without license from IHS

Not for Resale

CONTENTS

PAGE

Foreword ii

Part I – General Information 1

Part II – Lamp Classes 11

Table 1 13
Table 2 17
Table 3 18

Part III – Lamp Space Drawings 19

Part IV – Annexes 31

Annex Table A1 33
Annex Table A2 34
Annex Table A3 35
Annex B 36
Annex C 37
Annex D 38

Copyright National Electrical Manufacturers Association
Provided by IHS under license with NEMA
No reproduction or networking permitted without license from IHS

Not for Resale

Foreword (This Foreword is not part of American National Standard C78.20-1995)

This American National Standard, Incandescent Lamps – A, G, PS, and Similar Shapes with E26 Medium Screw Bases, C78.20-1995 sets forth the physical and electrical characteristics of the group of incandescent lamps that have A, G, PS, and similar bulb shapes with E26 medium screw (single- or double-contact) bases, including the reduced-wattage versions.

Suggestions for improvement of this standard will be welcome. They should be sent to the Secretary of Committee C78. National Electrical Manufacturers Association 1300 North 17th Street, Suite 1847, Rosslyn, VA 22209.

This standard was processed and approved for submittal to ANSI by C78 Accredited Standards Committee on Electric Lamps, and C78-1, Incandescent Lamps. Committee approval of the standard does not necessarily imply that all committee members voted for its approval.

The members of the Committees at the time of publishing are:

Al Rousseau, C78, Chairman
Randolph N. Roy, Secretariat
Al Rousseau, Technical Coordinator
Jeanne L. Spicer, Editorial Coordinator

Organization Represented	*Name of Representative*
Advance Transformer Company	Norman Grimshaw
Duro-Test Corporation	Herbert Strauss
Edison Electric Institute (Delegate)	William Maguire
Inchcape ETL Testing Laboratory	Craig Davenport
General Electric Lighting	Ralph Kaiser
Illuminating Engineering Society	Rita Harrold
National Electrical Manufacturers Association (Delegate)	Richard Snow
OSRAM SYLVANIA INC	Peter Bleasby
Philips Lighting Company	Alfred Rousseau
Underwriters Laboratories	David Belt

William A. Murray, C78-1, Chairman
Randolph N. Roy, Secretariat

Duro-Test Corporation	Michael J. Santelli
General Electric Lighting	Charles W. Cox
	John P. Krissinger
Indy Lighting, Inc.	Ted Yahraus
OSRAM SYLVANIA INC.	David Fox
	Richard Fleegal
Philips Lighting Company	William A. Murray
	Ed Hinde
	Steven Sirek
Underwriters Laboratories, Inc.	David M. Belt
	Kevin P. Kanakos

Copyright National Electrical Manufacturers Association
Provided by IHS under license with NEMA
No reproduction or networking permitted without license from IHS
Not for Resale

Part I

General Information

Copyright National Electrical Manufacturers Association
Provided by IHS under license with NEMA
No reproduction or networking permitted without license from IHS
Not for Resale

Copyright National Electrical Manufacturers Association
Provided by IHS under license with NEMA
No reproduction or networking permitted without license from IHS

Not for Resale

American National Standard for Electric Lamps—Incandescent Lamps —A, G, PS, and Similar Shapes with E26 Medium Screw Bases

1 Scope

This standard sets forth the physical and electrical characteristics of the group of incandescent lamps that have A, G, PS, and similar bulb shapes with E26 medium screw (single- or double-contact) bases, including the reduced-wattage versions. Only clear, inside frost, and white bulb finishes are acknowledged. Excluded from coverage are tungsten-halogen lamps and projection lamps.

Other groups of incandescent lamps are covered in the following related standards:

ANSI C78.21-1995, *American National Standard for Electric Lamps–Incandescent Lamps–PAR and R Shapes*

ANSI C78.22-1995, *American National Standard for Electric Lamps–Incandescent Lamps–A, G, PS, and Similar Shapes with E39 Mogul Screw Bases*

ANSI C78.23-1995, *American National Standard for Electric Lamps–Incandescent Lamps–Miscellaneous Types*

Many of the lamps covered by this standard do not relate to internationally standardized lamps that appear in International Electrotechnical Commission (IEC) standards. The subject lamps are not limited with regard to design life as are those in IEC 64, *Tungsten Filament Lamp for Domestic and Similar General Lighting Purposes.*[1] Their physical size may or may not comply with similarly rated IEC types, and their base temperature rise limits are generally lower for applications in lower-temperature lampholders commonly used in the United States. However, the standard lamps listed in Table 2 are also listed in IEC 64.

2 Normative references

The following standards contain provisions which, through reference in this text, constitute provisions of this American National Standard. At the time of publication, the editions indicated were valid. All standards are subject to revision, and parties to agreements based on this American National Standard are encouraged to investigate the possibility of applying the most recent editions of the standards indicated below.

ANSI C78.25-1991, *Electric Lamps–Method of Measuring Lamp-Base Temperature Rise*

ANSI C79.1-1980 (R1994), *Nomenclature for Glass Bulbs Intended for Use with Electric Lamps*

ANSI C81.61-1990, *American National Standard for Electrical Lamp Bases*

ANSI C81.63-1991, *American National Standard for Electrical Lamp Bases and Lampholders Gauges*

IES LM45, *IES Approved Method for Electrical and Photometric Measurements of General Service Incandescent Filament Lamps*[2]

IES LM54, *IES Guide to Lamp Seasoning*[2]

[1] Available from the American National Standards Institute, 11 West 42nd St., New York, NY 10036
[2] Available from the Illuminating Engineering Society, 11 West 42nd St., New York, NY 10017

Copyright National Electrical Manufacturers Association
Provided by IHS under license with NEMA
No reproduction or networking permitted without license from IHS Not for Resale

SR 30a, *Procedure for Use in Preparation of Lamp Space Drawings*[3]

3 Definitions and abbreviations

In addition to bulb and base codes that are defined in the standards listed in Section 2, some terms common to the industry are utilized in this standard.

3.1 MOL (Maximum overall length): The distance along the lamp's axis from the eyelet solder to the top of the bulb.

3.2 LCL (Light center length): The distance from the reference plane (eyelet solder for screw bases) to the center of the light-emitting area of the lamp.

3.3 Class: A grouping of like lamps having the same rated wattage, bulb shape, base, MOL, bulb finish, and filament type[4], including two or more voltage ratings within a voltage range.

NOTE—Each line item in Tables 1 and 3 is a "class."

3.4 Voltage range: A series of rated voltages related to commonly available supply lines.

NOTE—A footnote to Tables 1 and 3 lists several common voltage ranges applying to classes of lamps in this standard.

3.5 Rated wattage: The wattage marked on the lamp.

3.6 Rated voltage: The voltage marked on the lamp.

NOTE—If lamps are marked with a range voltage, it shall be interpreted that they are appropriate for use on any line voltage within that range. Consult manufacturer's catalog to determine design voltage.

3.7 Base temperature rise: The surface temperature rise (above ambient) of a standard test lampholder fitted to the lamp, when measured in accordance with the standard method (see Section 8 for methods of measurement).

3.8 Service: The field of most common application for a given lighting source. *Service,* as used in this standard, is not necessarily the only application.

3.9 Group: A grouping of lamps of the same rated wattage, with the same initial efficacy, whose rated voltages fall within the same voltage range (e.g. 100 ..... 150V).

3.10 Type: Lamps which, independent of type of base, are identical in photometric and electrical rating.

3.11 Manufacturer: An organization making lamps within the scope of this standard at one or more nominated factories having a common quality management.

3.12 Production: The number of lamps, within the scope of this standard, manufactured in a factory within a 12 month period.

---

[3] Available from the C78 Secretariat, c/o National Electric Manufacturers Association, 1300 North 17th Street, Suite 1847, Rosslyn, VA 22209.

[4] There is no attempt to identify or classify filament type in this standard.

Copyright National Electrical Manufacturers Association
Provided by IHS under license with NEMA
No reproduction or networking permitted without license from IHS
Not for Resale

3.13 Total production: The number of lamps, within the scope of this standard, manufactured in all the nominated factories of a single manufacturer within a 12 month period.

3.14 Whole production: The production of all types of lamps within the scope of this standard manufactured during a period of twelve months and nominated in a list by the manufacturer.

3.15 Inspection test quantity (I.T.Q.): The number of lamps to be tested with the intention of determining acceptability, of the whole production, as to dimensional requirements.

3.16 Rating test quantity (R.T.Q.): The number of lamps to be tested with the intention of determining acceptability, of the whole production, as related to initial readings.

3.17 Maintenance test quantity (M.T.Q.): The number of lamps to be tested with the intention of determining acceptability, of the whole production, as related to lumen maintenance.

3.18 Initial readings: The photometric and electrical measurements made at the end of the ageing period.

3.19 Test voltage: The rated voltage unless otherwise specified. If lamps are marked with a range voltage, the test voltage shall be taken as the mean of the range, unless otherwise specified.

3.20 Lumen maintenance: The ratio of luminous flux at 70% of rated life to the initial luminous flux, expressed as a percentage.

3.21 Qualifying limit: The maximum number of non-conforming lamps allowed within a given test quantity to establish compliance of the requirement being tested.

4 Lamp designations

This standard does not place any control over lamp designations. Incandescent lamps are generally designated by wattage and voltage ratings. Additional codes may be applied by the lamp manufacturer. See the lamp manufacturer's catalog for detailed information.

5 Bulb designations

Bulb designations used in this standard are defined in ANSI C79.1. Since the traditional eighth-inch sizes have long been utilized in some lamp designations, they are used in this standard. Their metric versions are shown in parentheses.

6 Bulb finish

Only lamps with clear, inside frost, or translucent white bulb finishes are considered in this standard. Silver bowl, enamel, transparent, and other special coatings are not covered. However, it should not necessarily be interpreted that each of these finishes is available for each class listed in Part III.

7 Lamp space drawings

For each bulb- base- MOL category, the lamp space drawings in Part III of this standard show the maximum limits of the space that may be occupied by any part of the bulb. A typical bulb shape is shown, as a dashed line, within that maximum space. The space shown shall accommodate the longest and shortest lamps with maximum bowl and neck diameters, and maximum bulb eccentricity. These drawings were prepared in accordance with SR30a.

Copyright National Electrical Manufacturers Association
Provided by IHS under license with NEMA
No reproduction or networking permitted without license from IHS
Not for Resale

The following general conditions apply to the construction of these space drawings:

a) Straight lines are used as much as possible to simplify the space outlines. All compromises with the actual space are in excess of the actual space required.

b) All excursions of a lamp bulb are shown relative to a fixed position base.

c) Bulb eccentricity with respect to the base axis is a combination of allowances for angular tilt (skewness) and lateral displacement (true eccentricity). An eccentricity angle of 3° applies generally to incandescent lamps, unless special applications require tighter limits.

d) The base contact-making gauge for each type of base controls the space near the rim of the base in the base-to-neck transition zone.

e) All dimensions are in millimeters unless otherwise specified.

f) The figure numbers shown in Tables 1 and 3 under the column "Lamp Space Drawing" relate directly to the former American National Standard for that category. For instance, Figure C78.20-204 was derived from the former standard ANSI C78.204-1949.

8 Methods of measurement

8.1 The method of measuring base temperature rise shall be as described in ANSI C78.25.

8.2 A recommended method of electrical measurement of lamps can be found in IES LM45.

9 Electrical characteristics

The values of lamp voltage, current, and wattage shown in Part II are those nominal values that apply after the lamps have been seasoned. (See IES LM54 for guidelines on lamp seasoning.)

10 Requirements

10.1 Screw-shell type bases, including the E26 medium screw and E26d double-contact medium screw and special gauges, shall comply with ANSI C81.61 and ANSI C81.63.

10.2 Individual lamps shall satisfy the limits for MOL and LCL that apply to their lamp class as shown in Tables 1 and 3.

10.3 All finished lamps shall have controlled dimensions, bulb size, and eccentricity such that they occupy a space within the dimensions of the appropriate lamp space drawings in Part III.

10.4 The initial wattage of individual lamps shall not exceed:

a) 104% +0.5 watts for 115, 120 & 125 volt lamps
b) 105% +0.5 watts for all other voltages.

10.5 The initial efficacy readings of individual clear, inside frost or frost equivalently coated lamps shall not be less than 93% of the average initial efficacy (LPW) shown in Table 2.

10.6 The percent lumen maintenance of individual lamps at 70% of rated life shall not be less than the minimum value specified in Table 2.

Copyright National Electrical Manufacturers Association
Provided by IHS under license with NEMA
No reproduction or networking permitted without license from IHS
Not for Resale

10.7 The average base temperature rise of a sample of lamps, of a specific rated voltage, shall not be greater than the limit shown for its lamp class in Tables 1 and 3.

NOTES

1 In relation to established lampholder safety standards, an average base temperature rise of 110K is the highest value that can be utilized in common low temperature holders.

2 The values in Tables 1 and 3 are related to popular "white" lamps that are used in luminaire thermal evaluations, per UL 1571. Lamps of other colors and other filament shapes in a given wattage size are likely to yield higher values and the 110K value noted above may be exceeded. Therefore, it would be necessary to use such lamps only in lampholders of a type that endure higher temperatures.

11 Information for luminaire design

11.1 Burning position

Certain incandescent lamps are restricted as to positioning during operation or "burning position." Lamps for three-way service, for example, may be designed for base-down burning only. Other limitations on burning position may apply, and these are noted in the column entitled "Potential Hazard Notation" in Tables 1 and 3. Misapplications of certain lamps could cause overheating of a luminaire.

11.2 Protection

The lamps listed in this standard are intended for indoor application or use within fully enclosed luminaires of the proper rating.

12 Conditions of compliance

Compliance is proven by satisfying the requirements of Section 11, assessed on the following basis.

12.1 Compliance of manufacturer's test data

12.1.1 The assessment shall be based on the test data in the manufacturer's records from all nominated factories under the common quality management, grouped together, meeting the requirements of clause 12.1.3.

12.1.2 The manufacturer shall declare a list of lamp types and marks of origin which are to be within the scope of this standard. Notifications of additions or deletions may be made at any time.

12.1.3 The whole production of a manufacturer shall be considered as satisfying the requirements of this standard if the conditions of subclauses 12.1.4, 12.1.5, and 12.1.6 are fulfilled for at least 75% (rounded to the nearest whole number) of the total number of types, as selected in section 14, for which test data has been submitted.

12.1.4 Dimensional

A type from the whole production of a manufacturer shall be considered to comply with the dimensional requirements for that type, if the number of lamps in the manufacturer's records falling the dimensional requirements of subclause 10.2 does not exceed the qualifying limit shown in Table A1.

12.1.5 Initial readings

A type from the whole production of a manufacturer shall be considered to comply with the initial reading requirements, for that type, if:

Copyright National Electrical Manufacturers Association
Provided by IHS under license with NEMA
No reproduction or networking permitted without license from IHS
Not for Resale

a) The number of lamps in the manufacturer's records whose wattage is above the limitation of 10.4, does not exceed the qualifying limit given in Table A2.

b) The number of lamps in the manufacturer's records having initial efficacy (LPW) values below the limitation of 10.5, does not exceed the qualifying limit given in Table A2.

12.1.6 Lumen maintenance

A type from the whole production of a manufacturer shall be considered to comply if for that type the total number of individual lamps failing the requirement of 10.6 does not exceed the qualifying limit given in Table A3.

13 Sampling

13.1 Principles of sampling

The lamps for testing shall be selected so as to ensure proper representation.

It is not necessary to replace an accidentally broken lamp if the result of the test (approval or rejection) is not affected by its replacement, provided the required quantity of lamps for any subsequent test is available. If replaced, a broken lamp shall be neglected in calculating the test results.

NOTE—Accidentally broken lamps include, for example, lamps damaged during handling and transportation and also lamps becoming defective for reasons which are not connected with the purpose of a particular test being applied.

13.2 Manufacturer's test data

The manufacturer shall make available all the data of his finished product tests pertinent to the lamp types on the manufacturer's nominated list and the requirements of this standard.

These test data shall refer to a sufficient number of lamps, regularly selected over a 12 month period, so when totaled is representative of the whole production.

13.3 Inspection test quantity (I.T.Q.)

There shall be selected an inspection test quantity (I.T.Q.) totaling at least 200 lamps. This selection shall be made at regular intervals during a period of 12 months.

13.4 The I.T.Q. shall contain lamp representatives of the four largest groups, with a minimum of 40 lamps per group.

a) For each of the other groups, which together with the four largest groups make up at least 75% of the production, a minimum of 20 lamps is required.

b) When a number of types make up a group, test quantities shall be selected from each of those types which make up at least 50% of the production of that group.

13.5 Rating test quantity (R.T.Q.)

A rating test quantity totaling at least 300 lamps, which may include the I.T.Q. lamps, shall contain lamps representative of the four largest groups, with a minimum of 60 lamps per group. For each of the other groups, a minimum of 30 lamps is required.

Copyright National Electrical Manufacturers Association
Provided by IHS under license with NEMA
No reproduction or networking permitted without license from IHS
Not for Resale

13.6 Maintenance test quantity (M.T.Q.)

A maintenance test quantity totaling at least 200 lamps, which shall be selected from the R.T.Q., shall contain lamps representative of the four largest groups, with a minimum of 40 lamps per group. For each of the other groups, a minimum of 20 lamps is required.

13.7 Providing the above I.T.Q., R.T.Q., and M.T.Q. requirements have been satisfied, any types in the manufacturer's records for which there are less than the minimum quantities of 20, 30, and 20 lamps respectively, shall not be considered.

Copyright National Electrical Manufacturers Association
Provided by IHS under license with NEMA
No reproduction or networking permitted without license from IHS
Not for Resale

Copyright National Electrical Manufacturers Association
Provided by IHS under license with NEMA
No reproduction or networking permitted without license from IHS

Not for Resale

Part II

Lamp Classes

Copyright National Electrical Manufacturers Association
Provided by IHS under license with NEMA
No reproduction or networking permitted without license from IHS

Not for Resale

Copyright National Electrical Manufacturers Association
Provided by IHS under license with NEMA
No reproduction or networking permitted without license from IHS

Not for Resale

Copyright National Electrical Manufacturers Association
Provided by IHS under license with NEMA
No reproduction or networking permitted without license from IHS
Not for Resale

Table 1–Standard lamps with A, G, PS, and similar bulbs and E26 single-contact or E26 double-contact medium screw bases

Line No.	Rated Wattage or Current	Rated Voltage (Note 1)	Bulb (Note 2)	Base (Note 3)	Lamp Maximum Overall Length (MOL)		Light Center Length (LCL)		Lamp Space Drawing	Max. Base Temp. Rise K (Note 4)	Service	Potential Hazard Notation
					mm	in	mm	in				
1	7.5	A	S11(S35)	E26	57.2	2-1/4	–	–	C78.20-201	–	General	–
2	10	A	S14(S44)	E26	88.9	3-1/2	63.5±3.2	2-1/2±1/8	C78.20-203	–	General	–
3	11	A	S14(S44)	E26	88.9	3-1/2	63.5±3.2	2-1/2±1/8	C78.20-203	–	General	–
4	15	A	A15(A48)	E26	88.9	3-1/2	60.3±3.2	2-3/8±1/8	C78.20-204	–	General	–
5	15	B	A17(A54)	E26	92.1	3-5/8	60.3±3.2	2-3/8±1/8	C78.20-205	–	Train Country home	–
6	15	C	A17(A54)	E26	92.1	3-5/8	60.3±3.2	2-3/8±1/8	C78.20-205	–	Train Country home	–
7	15	B	S14(S44)	E26	88.9	3-1/2	63.5±3.2	2-1/2±1/8	C78.20-203	–	Locomotive	–
8	25	A	A19(A60)	E26	100	3-15/16	63.5±3.2	2-1/2±1/8	C78.20-206	35	General	Note 5,10
8A	25	A	A19(A60)	E26	108	4-1/4	63.5±3.2	2-1/2±1/8	C78.20-210	–	General	–
9	25	B	A19(A60)	E26	100	3-15/16	63.5±3.2	2-1/2±1/8	C78.20-206	–	Train Country home	–
10	25	C	A19(A60)	E26	100	3-15/16	63.5±3.2	2-1/2±1/8	C78.20-206	–	Train	–
11	25	D	A19(A60)	E26	100	3-15/16	63.5±3.2	2-1/2±1/8	C78.20-206	–	General	–
12	1.0 Amp	30V	A19(A60)	E26	100	3-15/16	63.5±3.2	2-1/2±1/8	C78.20-206	–	Street railway	–
13	30–70–100	A	A21(A67)	E26d	139.9	5-5/16	–	–	C78.20–216	–	Three-way	Note 6
14	36	A	A19(A60)	E26	100	3-15/16	55.6±3.2	2-3/16±1/8	C78.20-206	–	Street railway Headlight	–
15	36	A	A21(A67)	E26	112.7	4-7/16	73.0±3.2	2-7/8±1/8	C78.20-215	–	Street railway	–

(Continued on next page)

Copyright National Electrical Manufacturers Association
Provided by IHS under license with NEMA
No reproduction or networking permitted without license from IHS
Not for Resale

Table 1 – (continued)

Line No.	Rated Wattage or Current	Rated Voltage (Note 1)	Bulb (Note 2)	Base (Note 3)	Lamp Maximum Overall Length (MOL)		Light Center Length (LCL)		Lamp Space Drawing	Max. Base Temp. Rise K (Note 4)	Service	Potential Hazard Notation
					mm	in	mm	in				
16	40	A	A15(A48)	E26	88.9	3-1/2	60.3±3.2	2-3/8±1/8	C78.20-204	–	Appliance	–
17	40	A	A19(A60)	E26	108.0	4-1/4	73.0±3.2	2-7/8±1/8	C78.20-210	70	General	Note 7
18	40	A	A19(A60)	E26	112.7	4-7/16	79.4±4.8	3-1/8±3/16	C78.20-211	70	General	Note 8,10
19	1.6 Amp	30V	A21(A67)	E26	112.7	4-7/16	73.0±3.2	2-7/8±1/8	C78.20-215	–	Street railway	–
20	50	A	A19(A60)	E26	112.7	4-7/16	79.4±4.8	3-1/8±3/16	C78.20-211	–	General	–
21	50	A	A19(A60)	E26	100	3-15/16	63.5±3.2	2-1/2±1/8	C78.20-206	–	Rough service	–
22	50	B	A21(A67)	E26	125.4	4-15/16	85.7±4.8	3-3/8±3/16	C78.20-217	–	Train Country home	–
23	50	C	A21(A67)	E26	125.4	4-15/16	85.7±4.8	3-1/8±3/16	C78.20-217	–	Train Country home	–
24	50	D	A19(A60)	E26	100	3-15/16	63.5±3.2	2-1/2±1/8	C78.20-206	–	General	–
25	50–100–150	A	A21(A67)	E26d	134.9	5-5/16	–	–	C78.20-216	–	Three-way	Note 6
26	50–200–250	A	A23(A71)	E26d	150.8	5-15/16	–	–	C78.20-227	–	Three-way	Note 6
27	56	A	A21(A67)	E26	112.7	4-7/16	73.0±3.2	2-7/8±1/8	C78.20-215	–	Street railway	–
28	60	A	A19(A60)	E26	112.7	4-7/16	79.4±4.8	3-1/8±3/16	C78.20-211	90	General	Note 9,12
29	60	A	A21(A67)	E26	112.7	4-7/16	61.9±3.2	2-7/16±1/8	C78.20-215	–	Traffic signal	Note 11
30	64	A	A21(A67)	E26	112.7	4-7/16	61.9±3.2	2-7/16±1/8	C78.20-215	–	Traffic signal	Note 11
31	67	A	A21(A67)	E26	112.7	4-7/16	61.9±3.2	2-7/16±1/8	C78.20-215	–	Traffic signal	Note 11
32	69	A	A21(A67)	E26	112.7	4-7/16	61.9±3.2	2-7/16±1/8	C78.20-215	–	Traffic signal	Note 11
33	75	A	A19(A60)	E26	112.7	4-7/16	79.4±4.8	3-1/8±3/16	C78.20-211	100	General	Note 9,10
34	75	A	A21(A67)	E26	134.9	5-5/16	98.4±4.8	3-7/8±3/16	C78.20-216	–	Rough service	–

Copyright National Electrical Manufacturers Association
Provided by IHS under license with NEMA
No reproduction or networking permitted without license from IHS

Table 1 – (continued)

Line No.	Rated Wattage or Current	Rated Voltage (Note 1)	Bulb (Note 2)	Base (Note 3)	Lamp Maximum Overall Length (MOL)		Light Center Length (LCL)		Lamp Space Drawing	Max. Base Temp. Rise K (Note 4)	Service	Potential Hazard Notation
					mm	in	mm	in				
35	94	A	P25(P79)	E26	120.7	4-3/4	52.4±3.2	2-1/16±1/8	C78.20-226	–	Street railway Headlight	–
36	100	A	A19(A60)	E26	112.7	4-7/16	79.4±4.8	3-1/8±3/16	C78.20-211	110	General	Note 7,10
37	100	D	A21(A67)	E26	134.9	5-5/16	98.4±4.8	3-7/8±3/16	C78.20-216	–	General	–
38	100	B	A21(A67)	E26	112.7	4-7/16	76.2±3.2	3±1/8	C78.20-215	–	Locomotive Headlight	–
39	100	A	A21(A67)	E26	134.9	5-5/16	98. 4±4.8	3-7/8±3/16	C78.20-216	–	Rough service General	–
40	100	A	A21(A67)	E26	112.7	4-7/16	76.2±3.2	3±1/8	C78.20-215	–	Spotlight Floodlight	–
41	100	A	A21(A67)	E26	112.7	4-7/16	61.9±3.2	2-7/16±1/8	C78.20-215	–	Traffic signal	Note 11
42	100	B	A23(A71)	E26	154.0	6-1/16	111.1±4.8	4-3/8±3/16	C78.20-218	–	Train	–
43	101	A	A23(A71)	E26	154.0	6-1/16	111.1±4.8	4-3/8±3/16	C78.20-218	–	Street railway	–
44	107	A	A21(67)	E26	112.7	4-7/16	61.9±3.2	2-7/16±1/8	C78.20-215	–	Traffic signal	Note 11
45	116	A	A21(A67)	E26	112.7	4-7/16	61.9±3.2	2-7/16±1/8	C78.20-215	–	Traffic signal	Note 11
46	150	A	A21(A67)	E26	139.7	5-1/2	100±4.8	3-15/17±3/16	C78.20-262	110	General	–
47	150	A	A21(A67)	E26	112.7	4-7/16	61.9±3.2	2-7/16±1/8	C78.20-215	–	Traffic signal	Note 11
48	150	A	A21(A67)	E26	112.7	4-7/16	76.2±3.2	3±1/8	C78.20-215	–	Traffic signal	Note 11
49	150	A	A23(A71)	E26	160.3	6-5/16	117.5±4.8	4-5/8±3/16	C78.20-253	–	General	–
50	150 (1950L)	A	P25(P79)	E26	120.7	4-3/4	76.2±3.2	3±1/8	C78.20-226	–	Traffic signal	Note 11
51	200	A	A23(A71)	E26	160.3	6-5/16	117.5±4.8	4-5/8±3/16	C78.20-253	95	General	–
52	200	A	PS25(PS79)	E26	176.2	6-15/16	133.4±4.8	5-1/4±3/16	C78.20-220	–	General	–
53	200	A	PS30(PS95)	E26	204.8	8-1/16	152.4±6.4	6±1/4	C78.20-221	–	General	–

(Continued on next page)

Not for Resale

Copyright National Electrical Manufacturers Association
Provided by IHS under license with NEMA
No reproduction or networking permitted without license from IHS
Not for Resale

Table 1 – (continued)

Line No.	Rated Wattage or Current	Rated Voltage (Note 1)	Bulb (Note 2)	Base (Note 3)	Lamp Maximum Overall Length (MOL)		Light Center Length (LCL)		Lamp Space Drawing	Max. Base Temp. Rise K (Note 4)	Service	Potential Hazard Notation
					mm	In	mm	In				
54	200	D	PS30(PS95)	E26	204.8	8-1/16	152.4±6.4	6±1/4	C78.20-221	–	General	–
55	200	A	A21(A67)	E26	139.7	5-1/2	133±4.8	4-1/16±3/16	C78.20-262	110	General	Note 7,10
56	201	A	PS30(PS95)	E26	204.8	8-1/16	152.4±6.4	6±1/4	C78.20-221	–	Street railway	–
57	250	A	G30(G95)	E26	130.2	5-1/8	76.2±3.2	3±1/8	C78.20-233	–	Spotlight Floodlight	Note 11
58	250	B	P25(P79)	E26	120.7	4-3/4	76.2±3.2	3±1/8	C78.20-226	–	Locomotive Headlight	–
59	250	C	P25(P79)	E26	120.7	4-3/4	76.2±3.2	3±1/8	C78.20-226	–	Locomotive Headlight	–
60	250	A	P25(P79)	E26	120.7	4-3/4	76.2±3.2	3±1/8	C78.20-226	–	Spotlight Floodlight	–
61	300	A	PS25(PS79)	E26	176.2	6-15/16	133.4±4.8	5-1/4±3/16	C78.20-220	–	General	Note 12
62	300	A	PS30(PS95)	E26	204.8	8-1/16	152.4±6.4	6±1/4	C78.20-221	–	General	Note 12

NOTES

1 Common lamp voltage ratings for voltage codes are as follows:
- A = 115–125V, 120V, 125V, 125–130V, etc.
- B = 30V, 32V or 34V
- C = 60V or 64V
- D = 220V, 220–230V, 230V, 240V, 250V, etc.

2 Standard bulb finishes are clear, inside frost, or frost equivalent coating.

3 Common American terminology for base codes is as follows:
- E26 = Medium screw base
- E26d = Double-contact medium screw base

4 See Clause 3.7 and Clause 8.1.

5 These lamps exist with both C9 and CC6 mount shapes. The base temperature rise limit is based upon C9 as the worst case.

6 Base-down burning only.

7 CC8 Mount shape.

8 CC6 Mount shape.

9 These lamps exist with both CC6 and CC8 mount shapes. The base temperature rise limit is based upon CC6 as the worst case.

10 Other mount shapes could incur different thermal results.

11 Base-down to horizontal burning.

12 Lamps with wattage ratings higher than 250W must be used in lampholders rated at 660W or higher. See ANSI/UL 496.

Copyright National Electrical Manufacturers Association
Provided by IHS under license with NEMA
No reproduction or networking permitted without license from IHS

Table 2–Initial efficacy (LPW) and percent maintenance of certain IF, clear, and frost equivalently coated standard lamps with A, G, PS, and similar bulbs and E26 single-contact medium screw bases

(1) Line	Wattage	Voltage	Bulb	Finish	Rated Life	Mount Shape	Average Initial Efficacy (LPW)	Lum. Maint. Min. %
8	25	120	A19	IF(2)	2500	C9	8.8	74
18	40	120	A19	IF(2)	1500	CC6, CC8	11.0	85
28	60	120	A19	IF(2)	1000	CC6, CC8	13.8	85
33	75	120	A19	IF(2)	750	CC6, CC8	14.7	85
36	100	120	A19	IF(2)	750	CC8	16.3	85
49	150	120	A21	IF(2)	750	CC8	17.6	85
51	200	120	A23	IF(2)	750	CC8	18.6	85

NOTES
1 "Line" is a cross-reference to Table 1.
2 Bulb finishes IF, Clear and Frost Equivalently Coated are considered to be equal.
3 The line items in this table contain additional descriptive items such as bulb finish, mount shape and rated life in order to more specifically define the lamp type to which the performance limits apply.

Not for Resale

NEMA C78-20 95 ■ 6470247 0507164 262 ■

Table 3–Reduced-wattage lamps with A, G, PS, and similar shapes and E26 single-contact or E26d double-contact medium screw bases

Line Number	Rated Wattage or Current	Rated Voltage (Note 1)	Bulb (Note 2)	Base (Note 3)	Lamp Maximum Overall Length (MOL)		Light Center Length (LCL)		Lamp Space Drawing	Max.Base Temp. Rise K (Note 4)	Potential Hazard Notation
					mm	in	mm	in			
1	15–135–150	A	A21(A67)	E26d	134.9	5-5/16	–	–	C78.20-216	–	Note 5
2	34	A	A19(A60)	E26	112.7	4-7/16	79.4±4.8	3-1/8±3/16	C78.20-211	70*	–
3	35	A	A19(A60)	E26	112.7	4-7/16	79.4±4.8	3-1/8±3/16	C78.20-211	70*	–
4	52	A	A19(A60)	E26	112.7	4-7/16	79.4±4.8	3-1/8±3/16	C78.20-211	90*	–
5	54	A	A19(A60)	E26	112.7	4-7/16	79.4±4.8	3-1/8±3/16	C78.20-211	90*	–
6	55	A	A19(A60)	E26	112.7	4-7/16	79.4±4.8	3-1/8±3/16	C78.20-211	90*	–
7	67	A	A19(A60)	E26	112.7	4-7/16	79.4±4.8	3-1/8±3/16	C78.20-211	100	–
8	68	A	A19(A60)	E26	112.7	4-7/16	79.4±4.8	3-1/8±3/16	C78.20-211	100	–
9	70	A	A19(A60)	E26	112.7	4-7/16	79.4±4.8	3-1/8±3/16	C78.20-211	100	–
10	90	A	A19(A60)	E26	112.7	4-7/16	79.4±4.8	3-1/8±3/16	C78.20-211	110*	
11	90	A	A21(A67)	E26	134.9	5-5/16	96.0±4.8	3-7/8±3/16	C78.20-216	110*	–
12	95	A	A19(A60)	E26	112.7	4-7/16	79.4±4.8	3-1/8±3/16	C78.20-211	110*	–
13	135	A	A21(A67)	E26	139.7	5-1/2	100±4.8	3-15/16±3/16	C78.20-262	–	–
14	135	A	A25(A79)	E26	176.2	6-15/16	133.4±4.8	5-1/4±3/16	C78.20-220	–	–

NOTES

1 Common lamp voltage ratings for voltage codes are as follows:
A = 115–125V, 120V, 125V, 125–130V, etc.

2 Standard bulb finishes are clear, inside frost, or frost equivalent coating.

3 Common American terminology for base codes is as follows:
E26–Medium screw base
E26d–Double-contact medium screw base

4 See Clause 3.7 and Clause 8.1. Those temperatures with an asterisk are under consideration.

5 Burn base down. Deterioration of sockets may result when burned base up.

Copyright National Electrical Manufacturers Association
Provided by IHS under license with NEMA
No reproduction or networking permitted without license from IHS
Not for Resale

Part III

Lamp Space Drawings

Copyright National Electrical Manufacturers Association
Provided by IHS under license with NEMA
No reproduction or networking permitted without license from IHS

Not for Resale

Copyright National Electrical Manufacturers Association
Provided by IHS under license with NEMA
No reproduction or networking permitted without license from IHS
Not for Resale

Copyright National Electrical Manufacturers Association
Provided by IHS under license with NEMA
No reproduction or networking permitted without license from IHS
Not for Resale

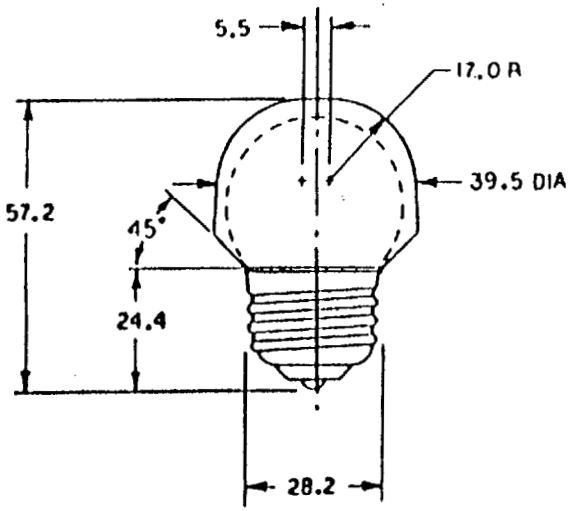

Bulb:	S11 (S35)
Base:	Medium screw, E26/24
Overall length:	57.2 (2-1/4 in.) max
	49.2 (1-15/16 in.) min
Eccentricity;	3°

NOTE—Dimensions are in millimeters, unless otherwise specified

Figure 78.20-201

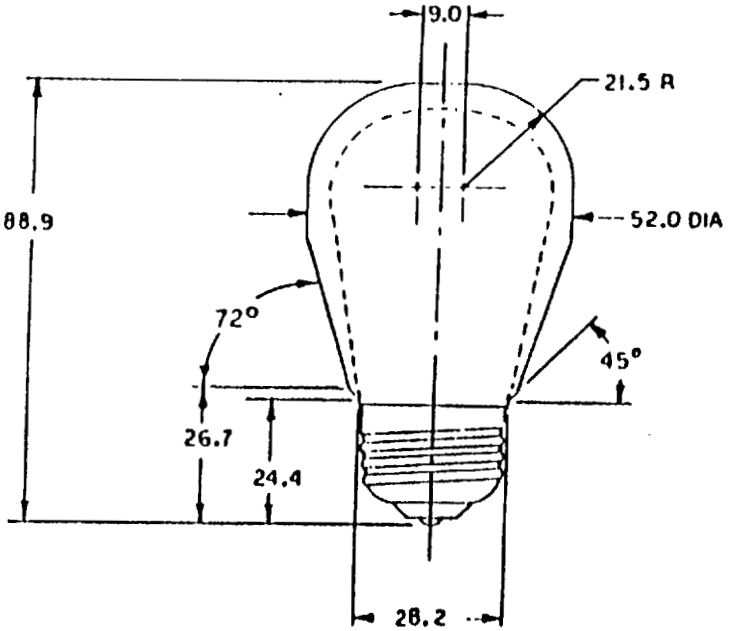

Bulb:	S14 (S44)
Base:	Medium screw, E26/24
Overall length:	88.9 (3-1/2 in.) max
	79.4 (3-1/8 in.) min
Eccentricity:	3°

NOTE—Dimensions are in millimeters, unless otherwise specified

Figure C78.20-203

Copyright National Electrical Manufacturers Association
Provided by IHS under license with NEMA
No reproduction or networking permitted without license from IHS
Not for Resale

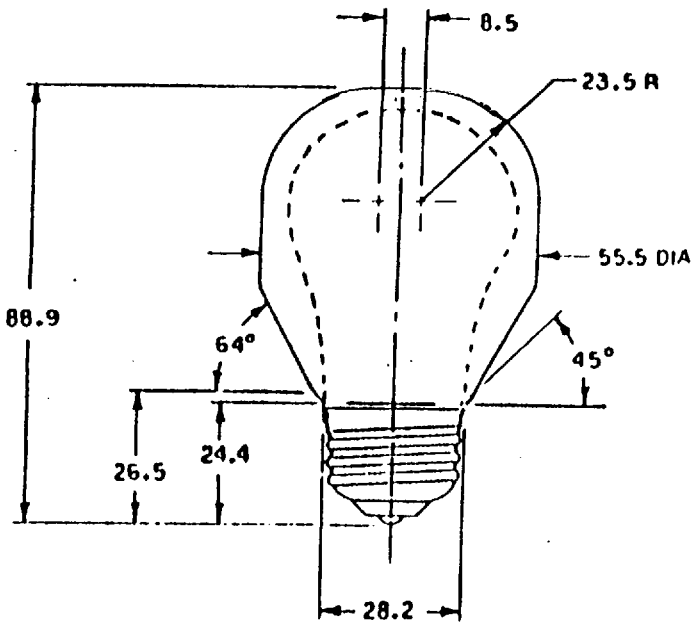

Bulb:	A15 (A48)
Base:	Medium screw, E26/24
Overall length:	88.9 (3-1/2 in.) max 79.4 (3-1/8 in.) min
Eccentricity:	3°

NOTE—Dimensions are in millimeters, unless otherwise specified

Figure 78.20-204

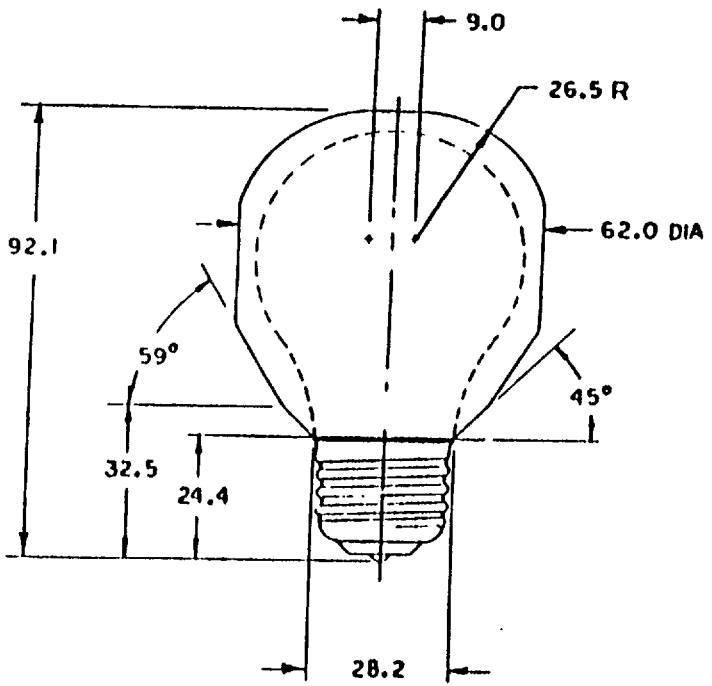

Bulb:	A17 (A54)
Base:	Medium screw, E26/24
Overall length:	92.1 (3-5/8 in.) max 82.6 (3-1/4 in.) min
Eccentricity:	3°

NOTE—Dimensions are in millimeters, unless otherwise specified

Figure C78.20-205

Copyright National Electrical Manufacturers Association
Provided by IHS under license with NEMA
No reproduction or networking permitted without license from IHS
Not for Resale

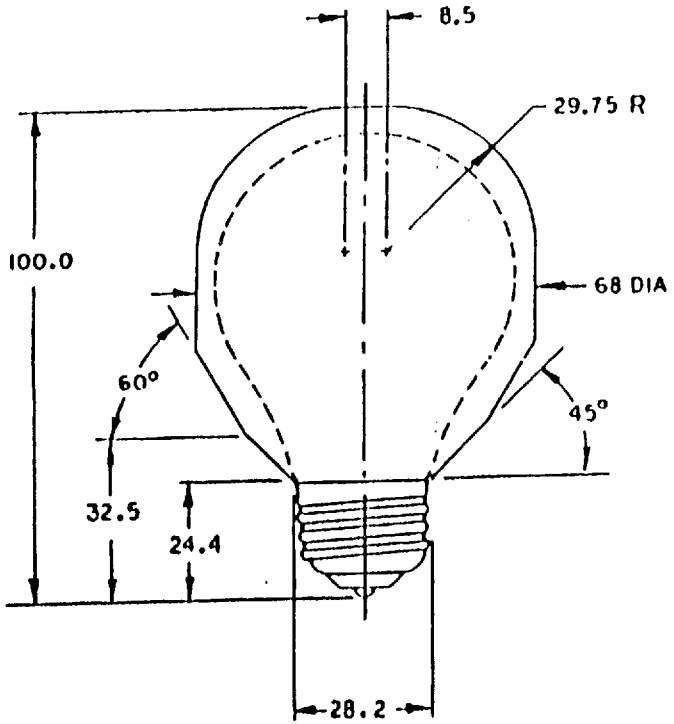

Bulb:	A19 (A60)
Base:	Medium screw, E26/24
Overall length:	100 (3-15/16 in.) max 90.4 (3-9/16 in.) min
Eccentricity:	3°

NOTE—Dimensions are in millimeters, unless otherwise specified

Figure 78.20-206

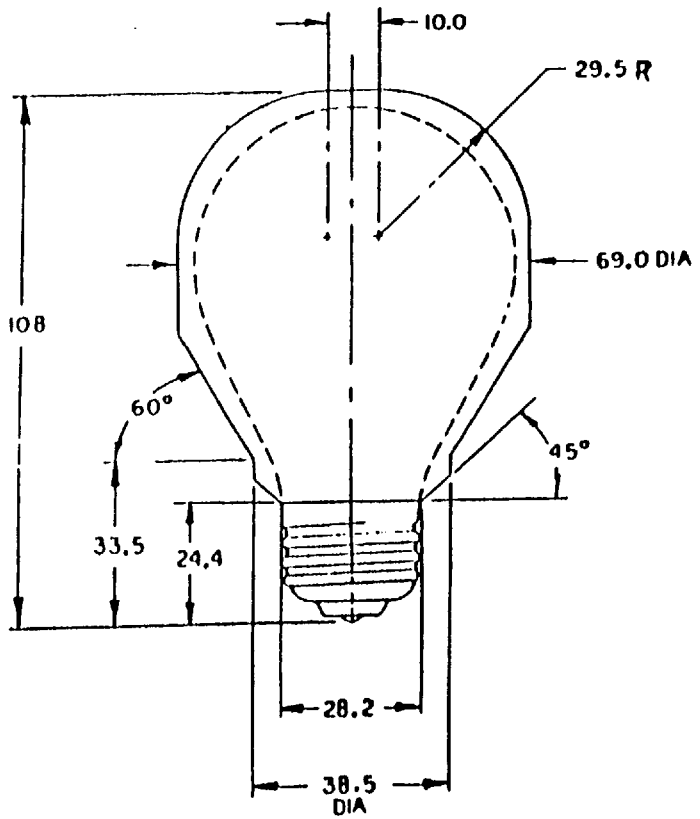

Bulb:	A19 (A60)
Base:	Medium screw, E26/24
Overall length:	108 (4-1/4 in.) max 98.4 (3-7/8 in.) min
Eccentricity:	3°

NOTE—Dimensions are in millimeters, unless otherwise specified

Figure C78.20-210

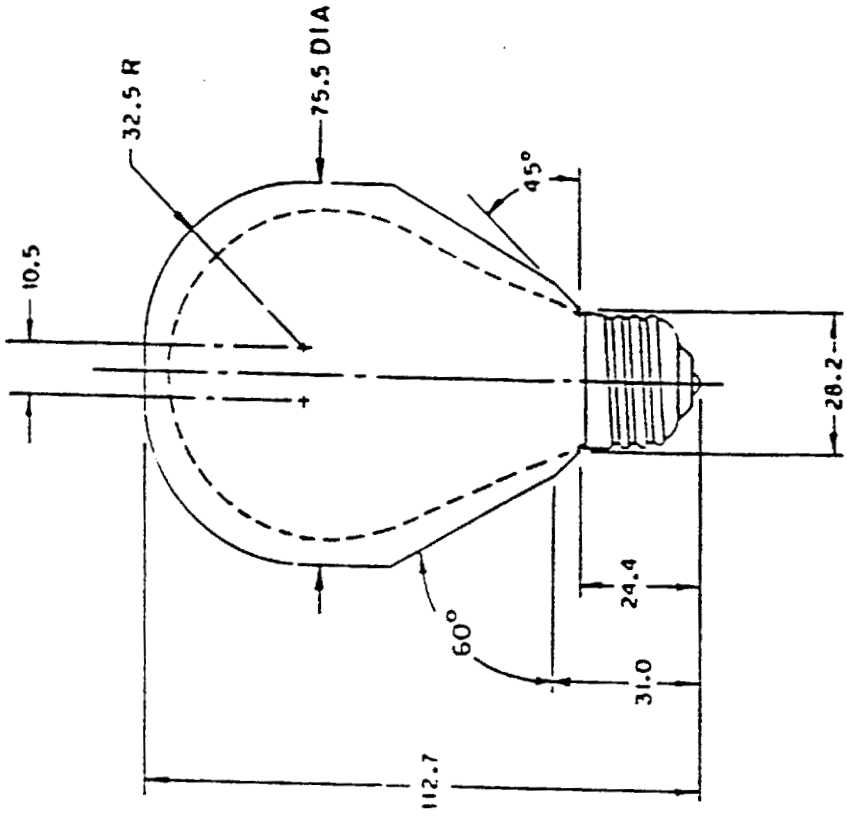

Bulb: A21 (A67)
Base: Medium screw, E26/24
Overall length: 112.7 (4-7/16 in.) max
104.7 (4-1/8 in.) min
Eccentricity: 3°

NOTE—Dimensions are in millimeters, unless otherwise specified

Figure C78.20-215

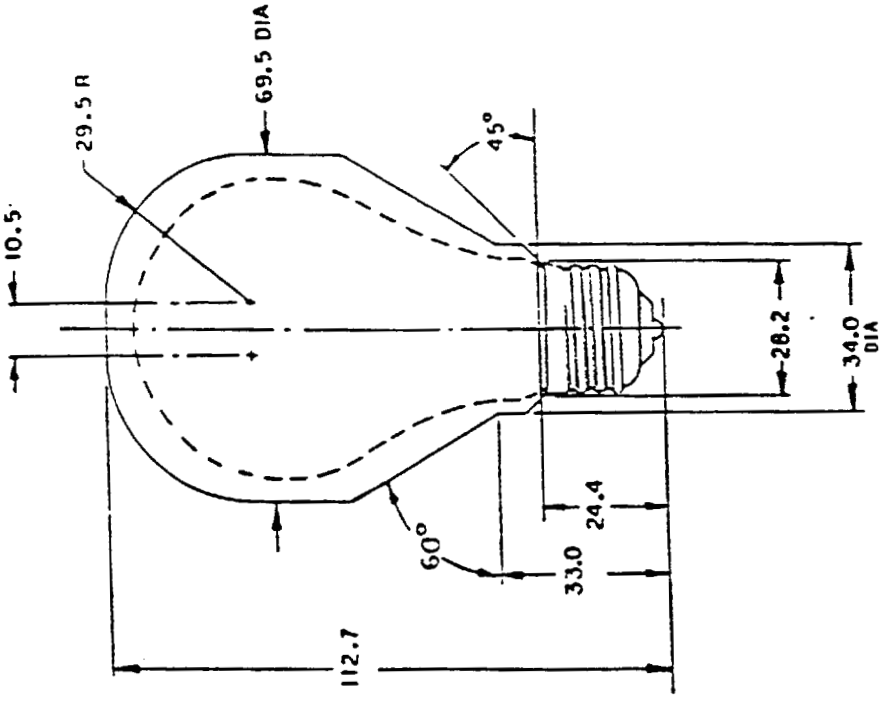

Bulb: A19 (A60)
Base: Medium screw, E26/24
Overall length: 112.7 (4-7/16 in.) max
103.2 (4-1/16 in.) min
Eccentricity: 3°

NOTE—Dimensions are in millimeters, unless otherwise specified

Figure 78.20-211

Copyright National Electrical Manufacturers Association
Provided by IHS under license with NEMA
No reproduction or networking permitted without license from IHS

Not for Resale

Copyright National Electrical Manufacturers Association
Provided by IHS under license with NEMA
No reproduction or networking permitted without license from IHS
Not for Resale

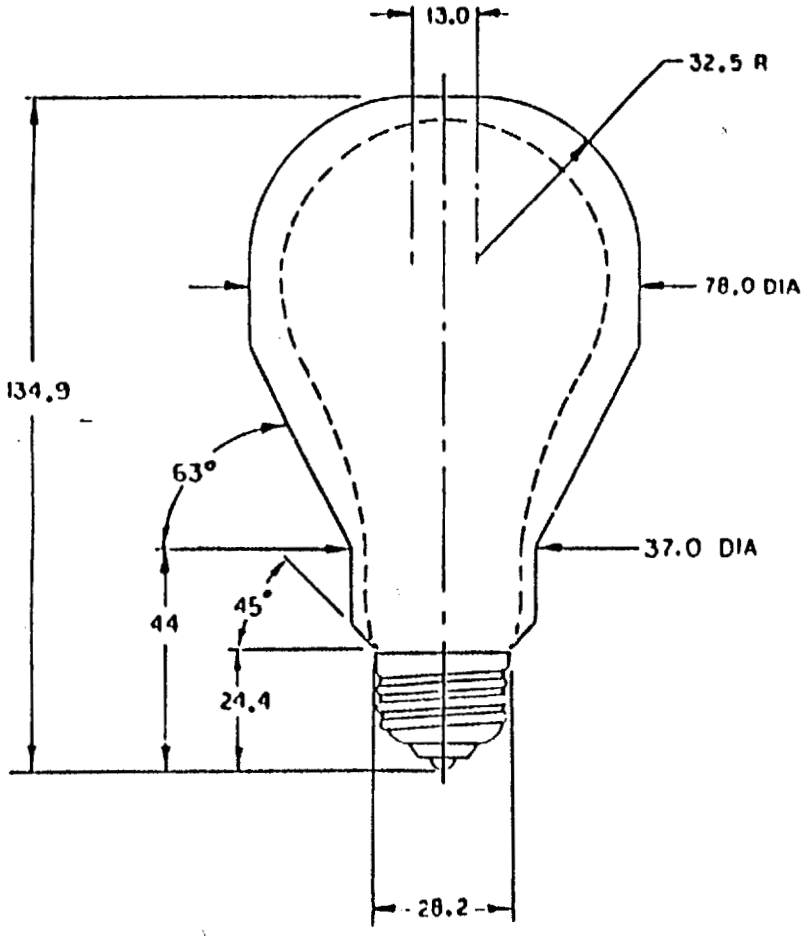

Bulb:	A21 (A67)
Base:	* Medium screw, E26/24
Overall length:	134.9 (5-5/16 in.) max 125.4 (4-5/16 in.) min
Eccentricity:	3°

NOTE—Dimensions are in millimeters, unless otherwise specified
* Three-way lamps use the double-contact medium screw, E26d base.

Figure 78.20-216

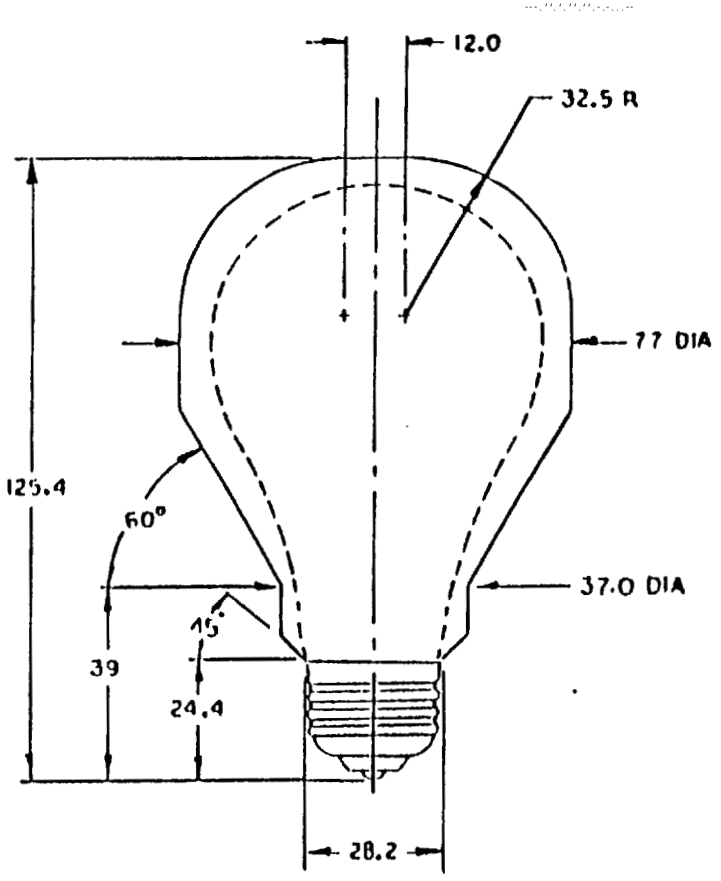

Bulb:	A21 (A67)
Base:	Medium screw, E26/24
Overall length:	125.4 (4-15/16 in.) max 115.8 (4-9/16 in.) min
Eccentricity:	3°

NOTE—Dimensions are in millimeters, unless otherwise specified

Figure C78.20-217

Copyright National Electrical Manufacturers Association
Provided by IHS under license with NEMA
No reproduction or networking permitted without license from IHS
Not for Resale

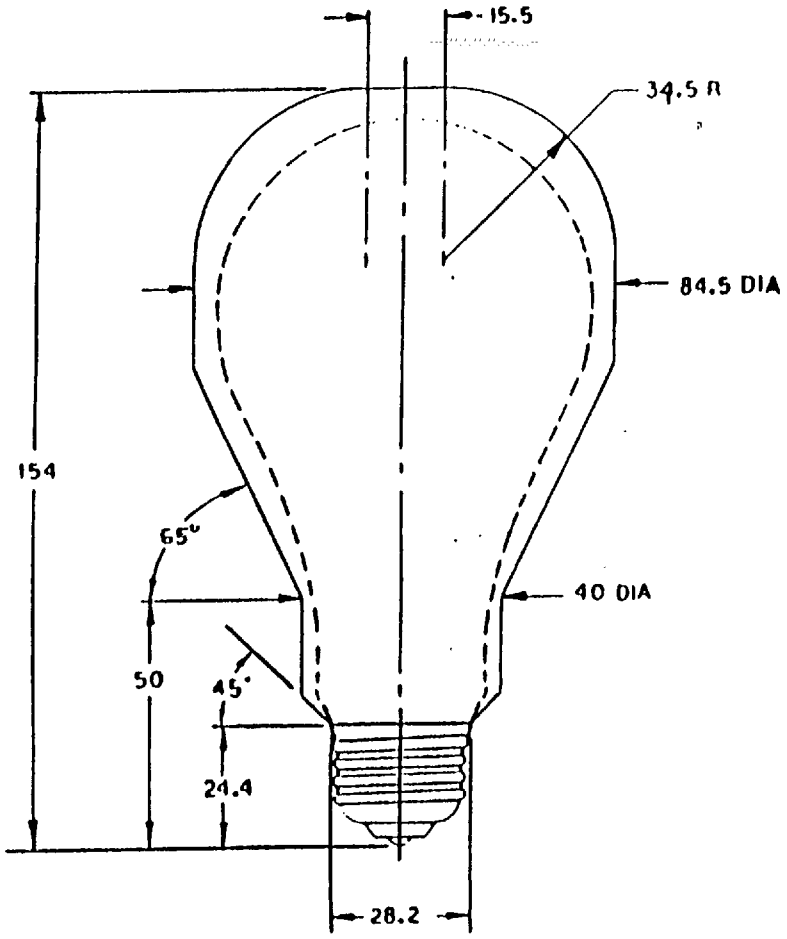

Bulb:	A23 (A71)
Base:	Medium screw, E26/24
Overall length:	154.0 (6-1/16 in.) max 141.2 (5-9/16 in.) min
Eccentricity:	3°

NOTE—Dimensions are in millimeters, unless otherwise specified

Figure 78.20-218

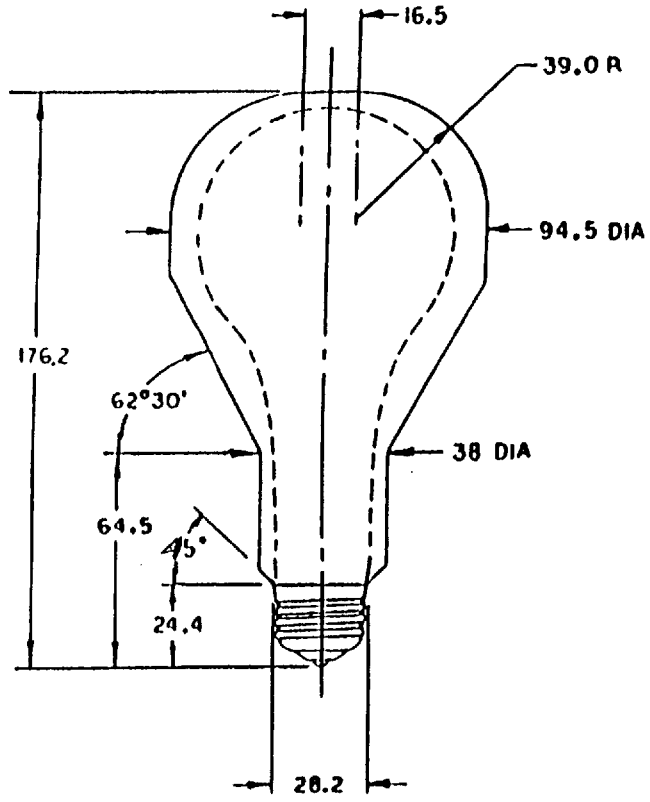

Bulb:	PS25 (PS79)
Base:	Medium screw, E26/24
Overall length:	176.2 (6-15/16 in.) max 165.1 (6-1/2 in.) min
Eccentricity:	3°

NOTE—Dimensions are in millimeters, unless otherwise specified

Figure C78.20-220

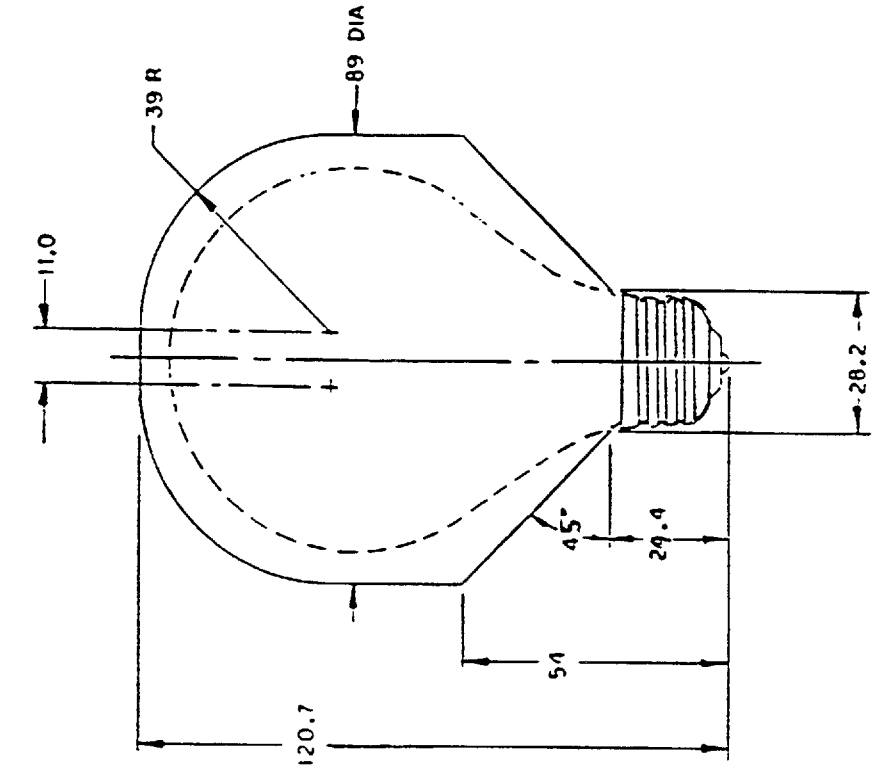

Bulb: PS25 (P79)
Base: Medium screw, E26/24
Overall length: 120.7 (4-3/4 in.) max
111.1 (4-3/8 in.) min
Eccentricity: 3°

NOTE—Dimensions are in millimeters, unless otherwise specified

Figure C78.20-226

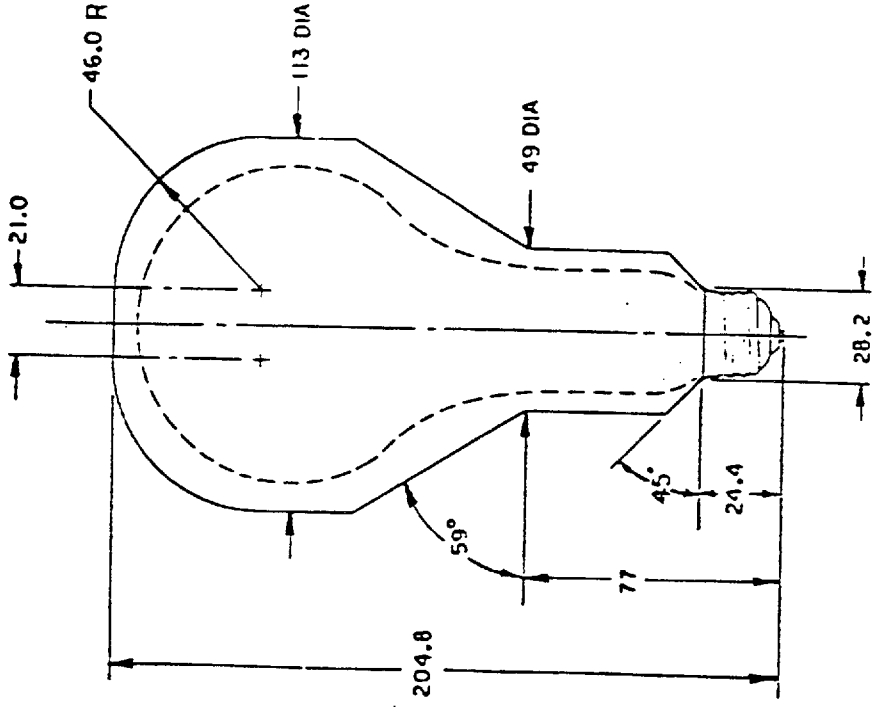

Bulb: PS30 (PS95)
Base: Medium screw, E26/24
Overall length: 204.8 (8-1/16 in.) max
193.6 (7-5/8 in.) min
Eccentricity: 3°

NOTE—Dimensions are in millimeters, unless otherwise specified

Figure 78.20-221

Copyright National Electrical Manufacturers Association
Provided by IHS under license with NEMA
No reproduction or networking permitted without license from IHS

Not for Resale

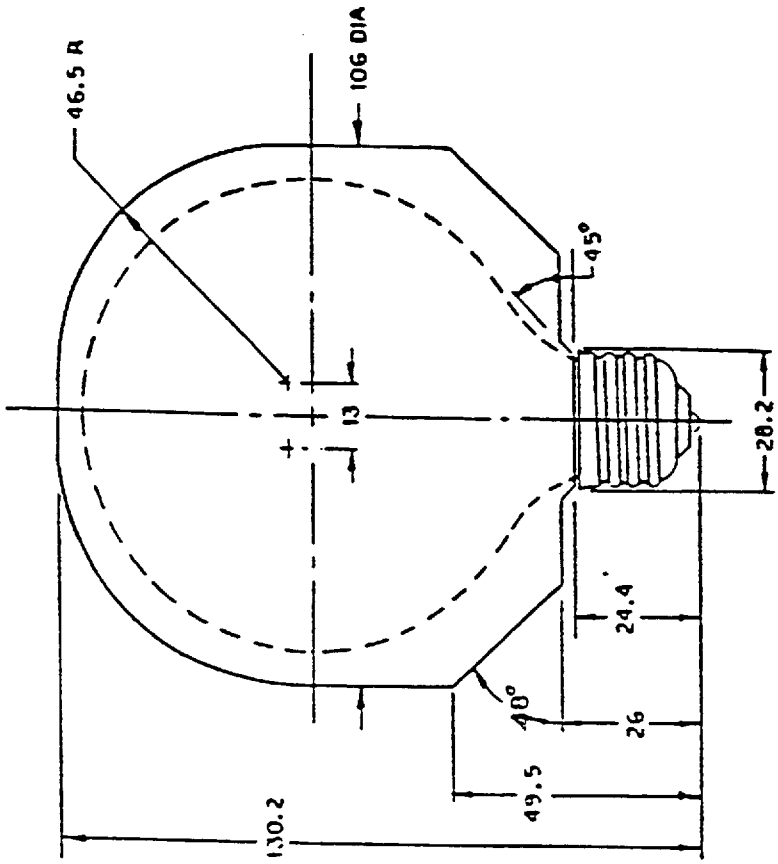

Bulb: G30 (G90)
Base: Medium screw, E26/24
Overall length: 130.2 (5-1/8 in.) max
117.4 (4-5/8 in.) min
Eccentricity: 3°

NOTE—Dimensions are in millimeters, unless otherwise specified

Figure C78.20-233

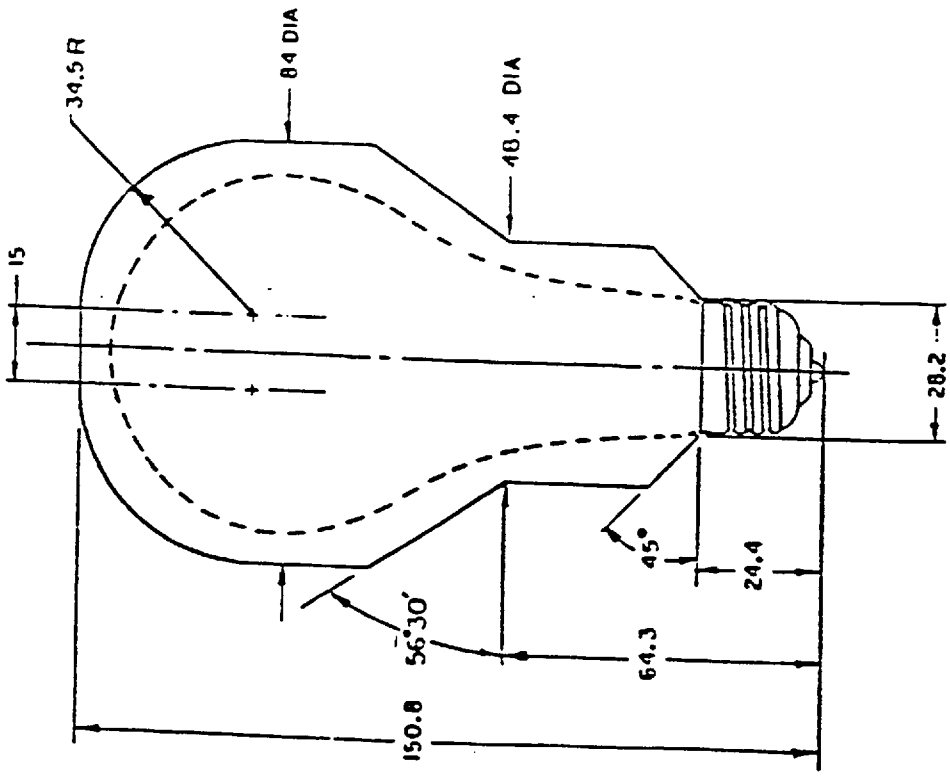

Bulb: A23 (A71)
Base: Double Contact Medium screw, E26d
Overall length: 150.8 (5-15/16 in.) max
140.3 (5-9/16 in.) min
Eccentricity: 3°

NOTE—Dimensions are in millimeters, unless otherwise specified

Figure 78.20-227

Copyright National Electrical Manufacturers Association
Provided by IHS under license with NEMA
No reproduction or networking permitted without license from IHS

Not for Resale

Copyright National Electrical Manufacturers Association
Provided by IHS under license with NEMA
No reproduction or networking permitted without license from IHS
Not for Resale

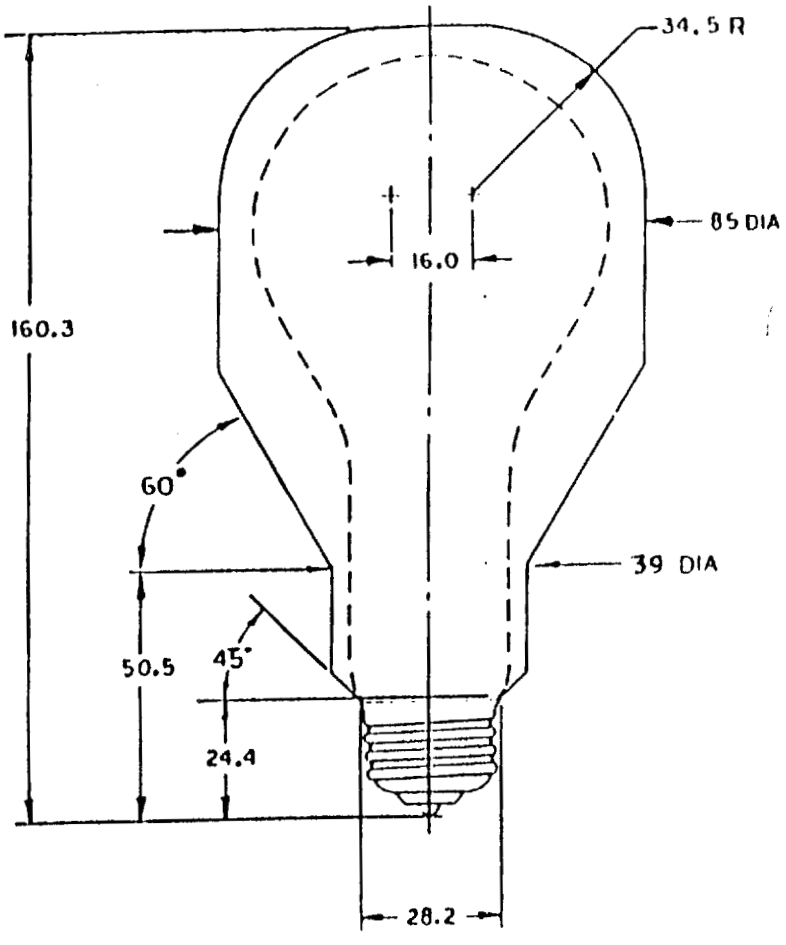

Bulb:	A23 (A71)
Base:	Medium screw, E26/24
Overall length:	160.3 (6-5/16 in.) max 149.2 (5-7/8 in.) min
Eccentricity:	3°

NOTE—Dimensions are in millimeters, unless otherwise specified

Figure 78.20-253

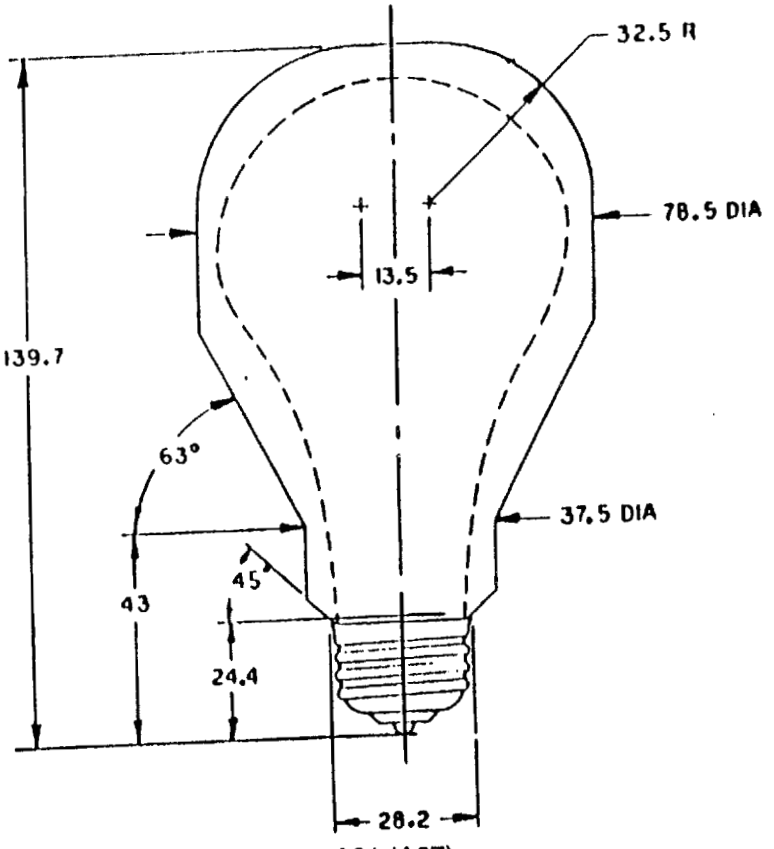

Bulb:	A21 (A67)
Base:	Medium screw, E26/24
Overall length:	139.7 (5-1/2 in.) max 125.4 (4-15/16 in.) min
Eccentricity:	3°

NOTE—Dimensions are in millimeters, unless otherwise specified

Figure C78.20-262

Copyright National Electrical Manufacturers Association
Provided by IHS under license with NEMA
No reproduction or networking permitted without license from IHS
Not for Resale

Part IV

Annexes

Copyright National Electrical Manufacturers Association
Provided by IHS under license with NEMA
No reproduction or networking permitted without license from IHS

Not for Resale

Copyright National Electrical Manufacturers Association
Provided by IHS under license with NEMA
No reproduction or networking permitted without license from IHS

Not for Resale

ANNEX A
(normative)

Table A1–Dimensional requirements

Number of lamps in records	Qualifying limit
20–34	2
35–54	3
55–74	4
75–95	5
96–116	6
117–138	7
139–161	8
162–184	9
185–208	10
209–231	11
232–257	12
258–281	13
282–307	14
308–332	15
333–357	16
358–383	17
384–409	18
410–436	19
437–461	20
462–488	21
489–515	22
516–542	23
543–569	24
570–596	25
597–623	26
624–650	27
651–677	28
678–706	29
707–	30
734–761	31
762–789	32
790–817	33
818–845	34
846–873	35
874–901	36
902–929	37
930–958	38
959–987	39
988–1016	40
1017 and above	See formula in Annex B

NOTE—The statistical basis for this table is described in Annex B.

Copyright National Electrical Manufacturers Association
Provided by IHS under license with NEMA
No reproduction or networking permitted without license from IHS
Not for Resale

TABLE A2–Initial readings

Number of lamps in records	Qualifying limit	Number of lamps in records	Qualifying limit	Number of lamps in records	Qualifying limit
30–34	4	330–340	32	675–687	60
35–41	5	341–353	33	688–699	61
42–50	6	354–365	34	700–712	62
51–60	7	366–376	35	713–725	63
61–70	8	377–389	36	726–737	64
71–80	9	390–401	37	738–749	65
81–90	10	402–413	38	750–762	66
91–101	11	414–425	39	763–775	67
102–111	12	426–437	40	776–787	68
112–122	13	438–449	41	788–799	69
123–133	14	450–461	42	800–811	70
134–144	15	462–473	43	812–824	71
145–154	16	474–486	44	825–837	72
155–165	17	4487–498	45	838–849	73
166–177	18	499–510	46	850–862	74
178–188	19	511–523	47	863–874	75
189–200	20	524–535	48	875–887	76
201–211	21	536–547	49	888–899	77
212–223	22	548–560	50	900–912	78
224–234	23	561–573	51	913–924	79
235–246	24	574–586	52	925–938	80
247–258	25	587–599	53	939–951	81
259–270	26	600–611	54	952–964	82
271–282	27	612–624	55	965–977	83
283–293	28	625–637	56	978–990	84
294–305	29	638–649	57	991–1003	85
306–317	30	650–661	58	1004 and above see formula in Annex B	
318–329	31	662–674	59		

NOTE—The statistical basis for this table is described in Annex B.

Copyright National Electrical Manufacturers Association
Provided by IHS under license with NEMA
No reproduction or networking permitted without license from IHS
Not for Resale

TABLE A3–Lumen maintenance

Number of lamps in records	Qualifying limit	Number of lamps in records	Qualifying limit	Number of lamps in records	Qualifying limit
20–28	4	332–341	36	679–689	68
29–36	5	342–352	37	690–700	69
37–44	6	353–363	38	701–711	70
45–53	7	364–373	39	712–722	71
54–61	8	374–384	40	723–733	72
62–70	9	385–394	41	734–744	73
71–79	10	395–405	42	745–755	74
80–89	11	406–415	43	756–767	75
90–98	12	416–426	44	768–778	76
99–107	13	427–437	45	779–789	77
108–117	14	438–447	46	790–800	78
118–127	15	448–458	47	801–811	79
128–137	16	459–469	48	812–822	80
138–146	17	470–480	49	823–833	81
147–156	18	481–491	50	834–844	82
157–165	19	492–502	51	845–855	83
166–175	20	503–513	52	856–867	84
176–185	21	514–523	53	868–878	85
186–195	22	524–535	54	879–889	86
196–205	23	536–547	55	890–901	87
206–216	24	548–557	56	902–912	88
217–226	25	558–567	57	913–924	89
227–236	26	568–578	58	925–935	90
237–247	27	579–589	59	936–947	91
248–257	28	590–601	60	948–958	92
258–268	29	602–612	61	959–969	93
269–278	30	613–623	62	970–980	94
279–288	31	624–633	63	981–991	95
289–299	32	634–644	64	992–1002	96
300–310	33	645–655	65	1003 and above, see formula in Annex B	
311–320	34	656–667	66		
321–331	35	668–678	67		

NOTE—The statistical basis for this table is described in Annex B.

Copyright National Electrical Manufacturers Association
Provided by IHS under license with NEMA
No reproduction or networking permitted without license from IHS
Not for Resale

ANNEX B
(informative)

Statistical concepts and basis of this standard

Of the various dimensional and performance characteristics covered by this standard, some may be conveniently checked by gauges on a Go, No-Go basis and some are ascribed a specific numerical value. To provide a uniform approach, the former and latter are classified as non-conformities if either they fail the gauges or they fall below (or above) a specific value. All the results may then be treated on an attribute basis and compliance of each tested parameter assessed by reference to qualifying limits in the various tables.

In selecting the acceptable quality level (AQL) and the specified limit for the various parameters, it is possible to call for low AQL's associated with a particular specified limit, or to operate with a higher AQL, and with a specified limit nearer the mean value. If the parameter being assessed forms a distribution which approximates a Gaussian (or normal) distribution, then it is more efficient in quality control procedures to operate in the mode with a tighter limit, but a reasonably high AQL.

Such an approach has been adopted in publication IEC 64 for many years. One of the reasons for this is that some of the tests are either lengthy or destructive making statistical sampling procedures essential. Thus, if a "non–conformity" is recorded against a particular lamp, it may still be a sound lamp and the probability of it being unsuitable for use may be low.

The qualifying limits are such that there is a 0.975 probability of compliance with each condition provided that the bulk from which the sample (or samples) is drawn contains approximately:

a) 3% failing any single dimensional requirement.
b) 7% outside either of the requirements for initial rating.
c) 8% failing the lumen maintenance requirement.

NOTE—Because 0.975 probability of compliance applies to each condition separately, it follows that, at the specified level of quality, the overall probability of compliance would be somewhat lower (by how much it is not possible to estimate accurately).

For larger samplings of test data than those given in the relevant tables in Appendix B, the qualifying limit for acceptance shall be obtained form the following formula:

$$QL = \frac{AN}{100} + 1.96\sqrt{\frac{AN}{100}}$$

Where:

N = number of lamps in records
A = appropriate percentage shown in 1, 2, or 3 above
AL = qualifying limit for acceptance

If a fraction results, it shall be rounded to the nearest whole number.

Copyright National Electrical Manufacturers Association
Provided by IHS under license with NEMA
No reproduction or networking permitted without license from IHS
Not for Resale

ANNEX C
(informative)

Bibliography

The revised standard ANSI C78.20-1995 contains information that was shown in the formerly designated American National Standards as follows:

Title	Former Designation
General-Service Incandescent Lamps for 120-, 125-, and 130-Volt Circuits	ANSI C78.100-1976(R1981)
General-Service Incandescent Lamps for 230- and 250-Volt Circuits	ANSI C78.101-1956(R1981)
Train, Locomotive, and Country Home Service 30-34 and 60-64 Volts	ANSI C78.102-1949(R1969)
Incandescent Lamps – Street Railway Service	ANSI C78.103-1976(R1981)
Incandescent Lamps–Spotlight and Floodlight Service, 120, 125, and 130 Volts	ANSI C78.105-1976(R1981)
Traffic-Signal Incandescent Lamps for 120-, 125-, and 130-Volt Circuits	ANSI C78.110-1976
Incandescent Lamps S-11 Bulb, Medium Screw Base	ANSI C78.201-1949(R1969)
Incandescent Lamps S-14 Bulb, Medium Screw Base	ANSI C78.203-1949(R1969)
Incandescent Lamps A-15 Bulb, Medium Screw Base	ANSI C78.204-1949(R1969)
Incandescent Lamps A-17 Bulb, Medium Screw Base	ANSI C78.205-1949(R1969)
Incandescent Lamps A-19 Bulb, Medium Screw Base	ANSI C78.206-1949(R1969)
Incandescent Lamps A-19 Bulb, Medium Screw Base	ANSI C78.210-1949(R1960)
Incandescent Lamps A-19 Bulb, Medium Screw Base	ANSI C78.211-1949(R1969)
Incandescent Lamps A-21 Bulb, Medium Screw Base	ANSI C78.215-1949(R1969)
A-21 Bulb, Medium Screw Base Incandescent Lamp	ANSI C78.216-1971
Incandescent Lamps A-21 Bulb, Medium Screw Base	ANSI C78.217-1949(R1969)
A23 Bulb, Medium Screw Base Incandescent Lamps	ANSI C78.218-1976
Incandescent Lamps PS-25 Bulb, Meiium Screw Base	ANSI C78.220-1949(R1969)
Incandescent Lamps PS-30 Bulb, Medium Screw Base	ANSI C78.221-1949(R1969)
Incandescent Lamps P-25 Bulb, Medium Screw Base	ANSI C78.226-1949(R1960)
A23 Bulb, Double-Contact Medium Screw Base Incandescent Lamps	ANSI C78.227-1977
Incandescent Lamps G-30 Bulb, Medium Screw Base	ANSI C78.233-1949(R1969)
A23 Bulb, Medium Screw Base Incandescent Lamps	ANSI C78.253-1976
A21 Bulb, Medium Screw Base Incandescent Lamp	ANSI C78.262-1971

Copyright National Electrical Manufacturers Association
Provided by IHS under license with NEMA
No reproduction or networking permitted without license from IHS
Not for Resale

ANNEX D
(informative)

The following standards can be used in conjunction with this standard:

ANSI C81.62-1991, *American National Standard for Electrical Lamp Holders*

ANSI/UL496-1986, *Edison-Base Lampholders*

ANSI/UL1571-1991, *Incandescent Lighting Fixtures*

Copyright National Electrical Manufacturers Association
Provided by IHS under license with NEMA
No reproduction or networking permitted without license from IHS
Not for Resale