NOTICE OF VALIDATION

ANSI C78.180-72
NOTICE 1
22 June 1992

INDUSTRY STANDARD

LAMP STARTERS, FLUORESCENT

SPECIFICATION FOR

ANSI C78.180-1972, dated 25 July 1985, has been reviewed and determined to be valid for use in acquisition.

Custodians:

Army - ME
Navy - SH
Air Force - 99

Preparing activity:

Army - ME

Project 6250-1016

AMSC N/A FSC 6250

DISTRIBUTION STATEMENT A. Approved for public release, distribution is unlimited.

Copyright National Electrical Manufacturers Association
Provided by IHS under license with NEMA
No reproduction or networking permitted without license from IHS
Not for Resale

L-55-21

CORRECTION

American National Standard
Specifications for Fluorescent Lamp Starters

C78.180-1972

On page 7, the last entry under 1.2, Related Standards, should be corrected to read:

American National Standard Specifications for Fluorescent Lamp Ballasts, C82.1-1972

On page 8, Table 1, COP-40/400, which is listed under Thermal Starters for 200 V Open Circuit Lamps, should be listed under Glow Switch Starters, following COP-400.
This segment of the table will thus read:

200 V Open Circuit						
	Glow Switch Starters					
30 W	FS-4	—	FS-30	—	—	—
—	—	—	COP-30	—	—	—
40 W	FS-4	—	FS-40	—	FS-4NA	—
—	—	—	FS-400	—	FS-NB4	—
—	—	—	FS-40/400	—	—	—
—	—	—	COP-40	—	FS-40A	—
—	—	—	COP-400	—	FS-4/400/NA	—
—	—	—	COP-40/400	—	FS-4/400A	—
	Thermal Starters					
40 W	—	FS-44	TC-40	—	TC-4	—
—	—	—	—	—	TGC-4	—

Copyright National Electrical Manufacturers Association
Provided by IHS under license with NEMA
No reproduction or networking permitted without license from IHS
Not for Resale

ANSI C78.180 72 ■ 2595512 0021965 5 ■

ANSI C78.180-1972

American National Standard

specifications for fluorescent lamp starters

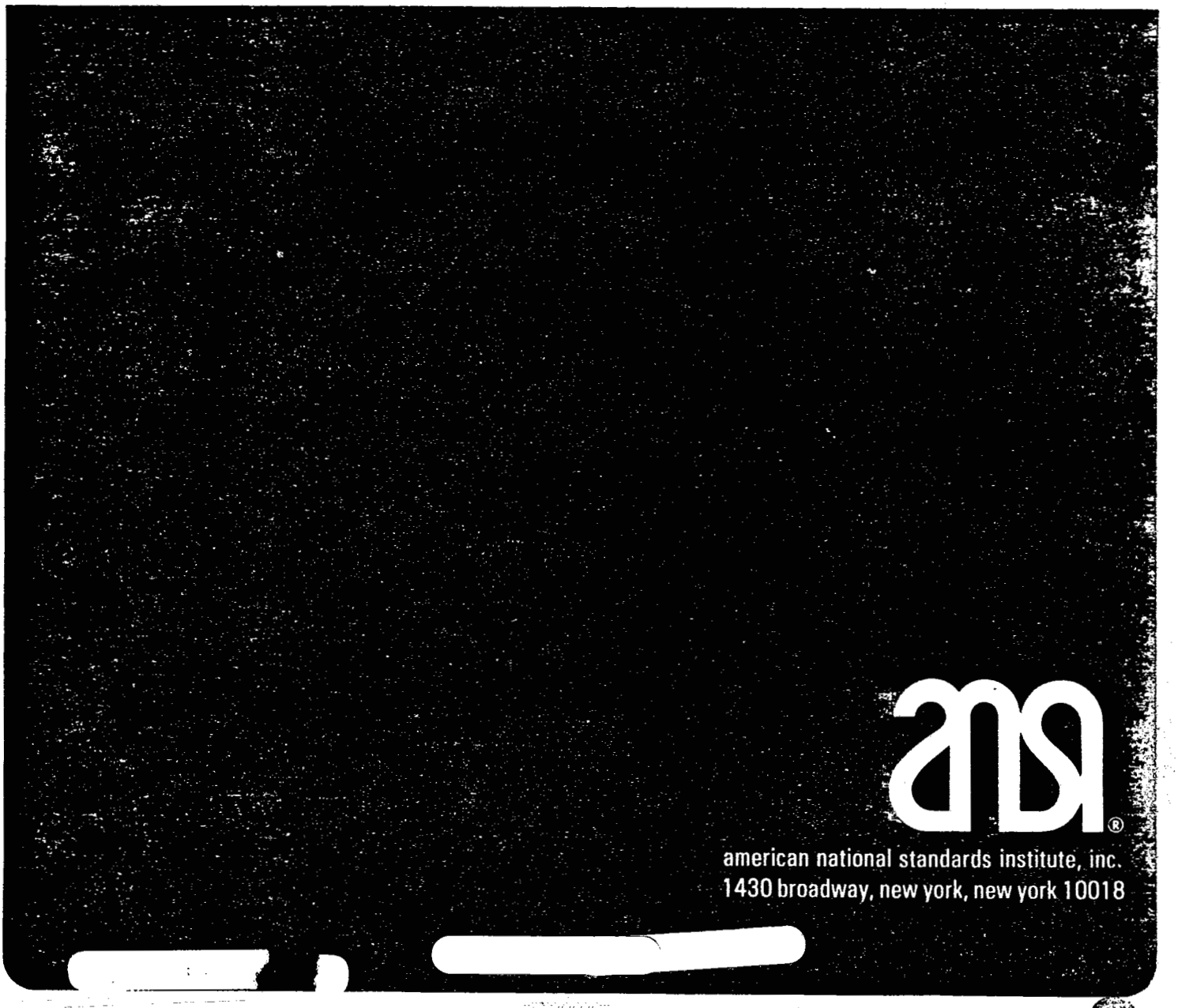

american national standards institute, inc.
1430 broadway, new york, new york 10018

Copyright National Electrical Manufacturers Association
Provided by IHS under license with NEMA
No reproduction or networking permitted without license from IHS
Not for Resale

ANSI C78.180 72 ■ 2595512 0021966 7 ■

ANSI
C78.180-1972
Revision of
C78.180-1966

American National Standard Specifications for Fluorescent Lamp Starters

Secretariat

Electrical and Electronics Technical Advisory Board

Approved November 18, 1971

American National Standards Institute, Inc

Copyright National Electrical Manufacturers Association
Provided by IHS under license with NEMA
No reproduction or networking permitted without license from IHS

Not for Resale

American National Standard

An American National Standard implies a consensus of those substantially concerned with its scope and provisions. An American National Standard is intended as a guide to aid the manufacturer, the consumer, and the general public. The existence of an American National Standard does not in any respect preclude anyone, whether he has approved the standard or not, from manufacturing, marketing, purchasing, or using products, processes, or procedures not conforming to the standard. American National Standards are subject to periodic review and users are cautioned to obtain the latest editions.

CAUTION NOTICE: This American National Standard may be revised or withdrawn at any time. The procedures of the American National Standards Institute require that action be taken to reaffirm, revise, or withdraw this standard no later than five years from the date of publication. Purchasers of American National Standards may receive current information on all standards by calling or writing the American National Standards Institute.

Published by

American National Standards Institute
1430 Broadway, New York, New York 10018

Copyright © 1972 by American National Standards Institute, Inc
All rights reserved.

No part of this publication may be reproduced in any form,
in an electronic retrieval system or otherwise, without
the prior written permission of the publisher.

Printed in the United States of America

W1M372/375

Copyright National Electrical Manufacturers Association
Provided by IHS under license with NEMA
No reproduction or networking permitted without license from IHS

Not for Resale

Foreword

(This Foreword is not a part of American National Standard Specifications for Fluorescent Lamp Starters, C78.180-1972.)

This American National Standard describes the starter characteristics that have been found necessary for the proper operation of fluorescent lamps and the means of evaluating starters for conformance to this specification. The satisfactory performance of fluorescent lamps is contingent, to a considerable extent, on the characteristics of the auxiliaries with which they are used. Lamps which in themselves are excellent may fail to give satisfaction if the auxiliaries have unsuitable characteristics.

In 1953, Standards Committee C78 on Electric Lamps approved two Proposed American National Standards for a period of trial and criticism. They were C78.180, which covered specifications for fluorescent lamp starters, and C78.181, which covered methods of test for fluorescent lamp starters. These standards were reviewed by Standards Committee C78 after having been used and distributed within the lamp industry for approximately three years. In 1956, these Proposed American National Standards were revised and approved as American National Standards C78.180-1956 and C78.181-1956.

In accordance with the Standards Institute procedure, American National Standards are reviewed at least once every five years for revision or reaffirmation. When these standards came up for review by Standards Committee C78, the committee felt that they would be easier to use and understand if they were combined. Accordingly, these standards have been revised, brought up-to-date, and American National Standard C78.181 has been incorporated into C78.180.

Suggestions for improvement gained in the use of this standard will be welcome. They should be sent to the American National Standards Institute, 1430 Broadway, New York, N.Y. 10018.

The C78 Committee on Standards for Electric Lamps, which reviewed and approved this standard, had the following personnel at the time of approval:

A. E. Feinberg, Chairman
W. C. Anderson, Vice-Chairman
M. F. Killian, Secretary

Organization Represented	*Name of Representative*
Association of American Railroads, Electrical Section, Engineering Division	H. W. Dunn
Canadian Standards Association	V. B. Coxworth
Duro-Test Corporation	H. A. Anderson
Electric Light and Power Group	W. S. Greenwood
	A. T. Higgins (Alt)
Electrical Testing Laboratories	W. G. Pracejus
	A. R. Chick (Alt)
Fluorescent Lighting Association	David Cutler
General Electric Company	E. M. Kooker
General Services Administration	J. T. Miller
	Herbert D. Harback (Alt)
Illuminating Engineering Society	Alexander Lurkis
	J. E. Kaufman (Alt)
Institute of Electrical and Electronics Engineers	Lester W. Penn, Jr
ITT Lamp Division	George A. Tamis
National Bureau of Standards	L. E. Barbrow
National Electrical Manufacturers Association	C. T. Baxter
	Archie R. Cornell
	G. L. Wolfert
	C. H. Finger (Alt)
GTE Sylvania, Inc	J. R. Morin
	T. Wroblewski (Alt)
Telephone Group	W. Lichowid
Underwriters' Laboratories, Inc	H. I. Mapplethorpe, Jr
	J. T. Duffy (Alt)

Copyright National Electrical Manufacturers Association
Provided by IHS under license with NEMA
No reproduction or networking permitted without license from IHS
Not for Resale

Organization Represented	*Name of Representative*
Westinghouse Electric Corporation	R. H. Atkinson K. H. Neulinger (Alt) L. M. Preziosi (Alt)

Subcommittee C78-3 on Fluorescent Lamp Starters, which prepared this standard, had the following members:

E. F. Hutchins, Chairman
M. F. Killian, Secretary

L. E. Barbrow
R. C. Cressman
J. F. Gilmore
E. F. Hutchins
W. J. Karash
H. Mapplethorpe
W. G. Pracejus
Sin So Tiong
A. P. Wasdyke
G. L. Wolfert

Copyright National Electrical Manufacturers Association
Provided by IHS under license with NEMA
No reproduction or networking permitted without license from IHS
Not for Resale

Contents

SECTION PAGE

1. Scope 7
   1.1 General 7
   1.2 Related Standards 7
2. Definitions 7
3. Starter Identification 7
   3.1 Marking 7
   3.2 Types of Starters 7
   3.3 Nomenclature 8
4. Electrical Supply Characteristics 8
   4.1 Test Voltage 8
   4.2 Test Frequency 8
   4.3 Line Voltage Wave Shape 8
   4.4 Steadiness of Line Voltage 8
   4.5 Supply Source Impedance 8
   4.6 Circuit Grounding 9
5. Ambient Conditions for Testing 9
   5.1 Temperature 9
   5.2 Humidity 9
6. Test Lamps 9
   6.1 Type 9
   6.2 Seasoning and Selection of Lamps for Starting-Time Tests 9
   6.3 Lamps for Lamp Starting Endurance Tests 9
   6.4 Lamps for Deactivated Lamp Endurance Tests 9
7. Test Ballasts 9
   7.1 Ballasts for Starting Tests 9
   7.2 Ballasts for Endurance Tests 9
8. Instruments 9
9. Starting Aids 10
10. Starter Performance 10
   10.1 Method of Test 10
   10.2 Starting and Preheat Time 10
   10.3 Test of Lockout Mechanism 10
   10.4 Voltage Characteristics of Voltage-Operated Starters 11
   10.5 Current Characteristics of Four-Pin Current-Operated Starters 12
   10.6 Radio Interference Suppression 12
   10.7 Starting Test at Elevated Temperatures 12
   10.8 Endurance 12
   10.9 Proof Voltage Test 13
   10.10 Insulation Resistance 13
11. Dimensions 13
12. Recommended Temperature Limits 13
13. Testing of Starters Intended for Operation on Direct Current 13
14. Conditions of Acceptance 14
15. Revision of American National Standards Referred to in This Document 14

Copyright National Electrical Manufacturers Association
Provided by IHS under license with NEMA
No reproduction or networking permitted without license from IHS
Not for Resale

SECTION PAGE

Tables

Table 1 Type Designation of Starters 8
Table 2 Starter Dimensions 14

Figures

Fig. 1 Circuit for Lamp Starting-Time and Preheat Time Tests 11
Fig. 2 Circuit for Lockout Opening and Reclosing Checks 11
Fig. 3 Circuit for Checking Voltage Limits for Starters 12
Fig. 4 Circuit for Lockout Endurance Test 13
Fig. 5 Starter Dimensions 14

Copyright National Electrical Manufacturers Association
Provided by IHS under license with NEMA
No reproduction or networking permitted without license from IHS
Not for Resale

American National Standard Specifications for Fluorescent Lamp Starters

1. Scope

1.1 General. This standard is intended to cover all types of starters used with preheat-type fluorescent and similar discharge lamps. It does not include manually operated switches which may be used for lamp starting.

1.2 Related Standards. This standard is to be used in conjunction with the following American National Standards (see Section 15).

American National Standard for Dimensional and Electrical Characteristics of Fluorescent Lamps, C78-1969

American National Standard on Electric Lamp Bases and Holders, C81-1971

American National Standard on Electric Lamp Bases and Holders, C81-1971

2. Definitions

2.1 General. Starters are devices which initially connect the cathodes, usually in series, of fluorescent or similar discharge lamps directly across the ballast-supply circuit so as to provide cathode preheating. When the starter contacts open, the voltage transient – due to interrupting the current through the ballast – is applied across the lamp to establish an arc.

Starters also include a capacitor for the purpose of assisting the starting operation and for the suppression of radio interference during lamp starting and lamp operation. They may also include a circuit-opening device, arranged to disconnect the preheat circuit if the lamp fails to light normally.

2.1.1 Glow Switch Contact(s) Starters. This type has normally open contacts, in a gaseous atmosphere. One or both is a bimetal strip(s). On starting, the full supply voltage is applied across the open contacts, producing a glow discharge. Heat from the discharge actuates the bimetal strip(s), the contacts close (extinguishing the glow), and cathode preheating begins. When the bimetal strip(s) cool sufficiently, the contacts open. The resulting interruption of the current through the ballast produces a transient which usually starts the lamp. Should the lamp fail to start, the above process repeats.

2.1.2 Thermal Starters. This type has normally closed contacts, one or both of which is a bimetal strip(s). Also, it has a heating coil in series with the ballast and lamp cathodes. When the supply voltage is first applied to the circuit, cathode preheating begins immediately. The heating coil actuates the bimetal strip(s), causing the normally closed contacts to open after an adequate preheat time, and the lamp starts. During lamp operation, a small amount of energy is consumed by thermal starters – by a heating coil which keeps the contacts from reclosing.

2.1.3 Other Types of Starters. These may include combinations of glow and thermal starters, solid-state devices and others. Performance specifications and the wording to be marked on the starter enclosure will be developed at a later date if the need arises.

3. Starter Identification

3.1 Marking. Starters shall be marked to indicate their type according to 3.2 and the rating of the lamps with which they are intended to be used.

3.2 Types of Starters. The following type descriptions are given for starters, together with markings that shall appear on the starter enclosures

3.2.1 Glow Switch Type

3.2.1.1 Simple Glow Switch. This device contains no lockout element. There is no required marking.

3.2.1.2 Lockout – Manual Reset. This device automatically removes the lamp from the circuit electrically when the lamp becomes deactivated. The circuit is restored manually. Starter enclosures shall be marked "Manual Reset."

3.2.1.3 Lockout – Automatic Reset. This device automatically removes the lamp from the circuit electrically when the lamp becomes deactivated and automatically resets when the lamp circuit is interrupted. Starter enclosures shall be marked "Automatic (or Auto) Reset."

3.2.2 Thermal Switch Type

3.2.2.1 Simple Thermal Switch. This device contains no lockout element. Starter enclosures shall be marked "Thermal."

3.2.2.2 Lockout – Manual Reset. This device automatically removes the lamp from the circuit electrically when the lamp becomes deactivated. The circuit is restored manually. Starter enclosure shall be marked "Thermal–Manual Reset."

Copyright National Electrical Manufacturers Association
Provided by IHS under license with NEMA
No reproduction or networking permitted without license from IHS
Not for Resale

3.2.2.3 Lockout – Automatic Reset. This device automatically removes the lamp from the circuit electrically when the lamp becomes deactivated and automatically resets when the lamp circuit is interrupted. Starter enclosures shall be marked "Thermal–Automatic (or Auto) Reset."

3.3 Nomenclature. See Table 1 for type designations.

4. Electrical Supply Characteristics

4.1 Test Voltage. For test purposes, the supply voltage shall be either the rated voltage of the ballast or–for certain tests–the voltage specified in this standard. The supply shall be maintained constant within ± 1.0 percent.

4.2 Test Frequency. The frequency of the supply voltage shall be the rated frequency of the ballast, and maintained constant within ± 0.5 percent.

4.3 Line Voltage Wave Shape. The ac voltage supply throughout the full range of test requirements shall be such that the rms summation of the harmonic components shall not exceed three percent of the fundamental component.

4.4 Steadiness of Line Voltage. The line voltage should be as steady and free from sudden changes as possible. If the static type of voltage stabilizer is used, it is important to check the wave shape to see that it meets the specification given in 4.3.

4.5 Supply Source Impedance. The supply source – including any variable transformers or small generators

Table 1
Type Designation of Starters

Lamp Application	Simple Switch		Lockout Manual-Reset		Lockout Automatic-Reset	
	2 Pin	4 Pin	2 Pin	4 Pin	2 Pin	4 Pin
118-120 V Open Circuit			Glow Switch Starters			
4, 6, 8 W	FS-5	—	—	—	—	—
14, 15 W	FS-2	—	—	—	—	—
20 W	FS-2	—	FS-20	—	FS-2NA	—
			COP-20	—	FS-NB2	—
					FS-20A	—
22 W Circular	FS-22	—	—	—	—	—
25 W	FS-25	—	—	—	—	—
			Thermal Starters			
8 W	AT-58	—	—	—	—	—
20 W	—	—	—	—	TC-2	—
	—	—	—	—	TGC-2	—
150 V Open Circuit			Glow Switch Starters			
32 W Circular	FS-12	—	—	—	—	—
85, 90, 100 W	FS-6	FS-64	COP-6	COP-64	FS-6NA	FS-64-NA
	FS-85	FS-85-4	FS-852	FS-850	FS-85NA	FS-85NA-4
—	—	—	FS-850-2	FS-850-4	FS-850A	FS-850A-4
				FS-850S		
			Thermal Starters			
85, 90, 100 W	—	FS-64	—	—	—	—
200 V Open Circuit			Glow Switch Starters			
30 W	FS-4	—	FS-30	—	—	—
—	—	—	COP-30	—	—	—
40 W	FS-4	—	FS-40	—	FS-4NA	—
—	—	—	FS-400	—	FS-NB4	—
—	—	—	FS-40/400	—	—	—
—	—	—	COP-40	—	FS-40A	—
—	—	—	COP-400	—	FS-4/400/NA	—
—	—	—	—	—	FS-4/400A	—
			Thermal Starters			
40 W	—	FS-44	TC-40	—	TC-4	—
—	—	—	COP-40/400	—	TGC-4	—

Copyright National Electrical Manufacturers Association
Provided by IHS under license with NEMA
No reproduction or networking permitted without license from IHS
Not for Resale

which may be used – shall have sufficient power capacity and a sufficiently low impedance, compared with the lamp-ballast impedance, to insure that the voltage to the lamp-ballast combination does not vary by more than one percent, with the lamp ballast combination in and out of the circuit (no load to full load).

4.6 Circuit Grounding. In all of the wiring diagrams given in this standard it will be noted that one side of the circuit – the side containing the instrument current coils – has been shown connected to ground.

This is a recommended safety precaution, since many types of portable instruments have current-coil terminals which are not insulated and which could easily constitute a shock hazard if not kept at ground potential. In those situations where the available power source is already grounded (for example, a 120/240 volt three-wire supply with grounded neutral) it will not be possible to use the ground connection as shown in these diagrams. In such cases, other arrangements should then be made to minimize shock hazards.

5. Ambient Conditions for Testing

5.1 Temperature. The ambient temperature shall be 25°C ± 5°C (77°F).

5.2 Humidity. The relative humidity is not restricted.

6. Test Lamps

6.1 Type. When lamp starting-time or endurance tests are made on starters, the fluorescent lamps used shall be the principal type for which the starter was designed.

6.2 Seasoning and Selection of Lamps for Starting-Time Tests. Commercially available lamps, of recent manufacture, recommended for use in preheat (Switch) start circuits shall be used. Where several lamp types are used with a given ballast-starter combination, the most popular lamp type shall be used.

(1) For F4T5, F6T5, F8T5 – use F8T5 lamps.
(2) For F14T12, F15T12, F20T12 – use F20T12 lamps.
(3) For F85T17, F90T17, F100T17 – use F90T17 lamps.

To avoid the possibility of using lamps of poor quality, the lamps shall be seasoned a minimum of 100 hours and shall be selected to have operating voltages within 2.5 percent of rated operating voltage as given in American National Standard C78-1969. Lamps shall be replaced at least every two years, or more frequently if an appreciable degree of end discoloration is visible. Lamps showing swirling or other abnormal conditions should not be used.

6.3 Lamps for Lamp Starting Endurance Tests. Lamps shall be commercial products of good quality and less than two years old.

6.4 Lamps for Deactivated Lamp Endurance Tests. Deactivated lamps are generally recommended. However, in the case of glow starters, single cathodes from each of two lamps or resistances equivalent to the cold resistances of the cathodes may be used.

7. Test Ballasts

7.1 Ballasts for Starting Tests. Where available, ballasts shall be commercial products which meet the requirements of American National Standard C82.1-1968. Ballasts shall have a rating suitable for the principal type of lamp for which the starter was designed.

For certain families of lamps, namely the F4, 6, and 8-watt T-5 lamps and the F14, 15, and 20-watt lamps, so-called "universal" ballasts are used almost exclusively throughout the lighting industry. For testing starters for these families of lamps "universal" ballasts may be used.

In any event, ballasts shall be selected or adjusted to meet all three of the following requirements:

(1) Open-circuit voltage at 90 percent rated line voltage to be not less than, nor more than 3 percent greater than the voltage limit A as given in 10.4.

(2) Preheat current within five percent of design at rated line voltage, where "design" is defined as the mean between maximum and minimum preheat current limits as given in American National Standard C78-1969.

(3) Open-circuit voltage applied to the starter with a deactivated lamp in the circuit at rated line voltage shall not exceed 110 percent of the nominal open-circuit voltage as given in 10.4. This requirement is included primarily for ballasts with "compensating preheat windings."

7.2 Ballasts for Endurance Tests. Ballasts for endurance tests shall comply with the requirements of 7.1 (1) and (2).

8. Instruments

8.1 Instrument Characteristics

8.1.1 Potential Circuits. Instruments used for measurements of secondary voltages shall not draw more than three percent of rated lamp current.

Copyright National Electrical Manufacturers Association
Provided by IHS under license with NEMA
No reproduction or networking permitted without license from IHS
Not for Resale

8.1.2 Current Circuits. Instruments connected in series with the lamp shall have an impedance such that the voltage drop does not exceed two percent of rated lamp operating voltage.

9. Starting Aids

For starting tests, there shall be a metal strip two inches wide, extending the full lamp length and located approximately one inch from the bulb-wall of the lamp. This strip shall be connected to the common lead for lamp and line, usually the white lead, and the combination shall be grounded. For lamps with a simple series choke ballast, the lamp is connected directly to the grounded side of the power supply line. The metal strip need not be used on endurance tests circuits.

10. Starter Performance

10.1 Method of Test. Starter performance shall be determined in conjunction with the test methods incorporated herein, and shall be based on a minimum sample of ten starters. In any of the following tests, where testing is required on lead and lag circuits, it is understood that tests on only one circuit are required where only that circuit is commercially available or commonly used.[1]

Where the starter enclosure contains a hole or holes capable of transmitting light, the hole or holes shall be covered with an opaque material before the tests are made.

10.2 Starting and Preheat Time

10.2.1 Initial Start. Starters shall be tested both in lead lag circuits with the specified test ballast (see 7.1). Each starter shall be tested at least once in each circuit at both 90 percent and 100 percent of rated line voltage. At least 90 percent of these tests on the sample of starters (see 10.1) shall light a test lamp of the proper ratings within the following time limits:

Lamp Size	Maximum Starting Time at Rated Voltage, (Seconds)	Maximum Starting Time at 90 Percent of Rated Voltage, (Seconds)
Up To and Including 40 W	10	20
90 and 100 W	15	30

[1] 4-, 6-, 8-, 14-, 15-, 20-, 22-, 25-, and 32-watt lamps are used most commonly in lag circuits.

In order to minimize humidity effects, lamps shall be operated for 5-10 minutes then allowed to cool for 2 ± 1 minute just prior to performing lamp starting tests. This ensures that the test lamps reach a temperature slightly above the ambient temperature. After each test, lamps shall be turned off and left unlighted for a period of one minute or more to ensure complete deionization before the next starting trial is made.

10.2.2 Restart. After the initial start test, the restarting test shall be made in each circuit at rated supply voltage after lamp operation for 1-1/2 minutes, the supply being disconnected for a time not to exceed 2 seconds. Restarting time for all types of starters shall not exceed 30 seconds.

10.2.3 Preheat Time. Preheat time is the accumulated time the starter contacts are closed, measured from the instant the voltage is applied to the instant the lamp is started. The average preheat time of a sample of any starter type shall meet the preheat time requirements of American National Standard C78-1969, when tested at rated voltage in each circuit as prescribed in 10.2.4. The minimum preheat time of any test of any individual starter in the sample shall be not less than 75 percent of the above requirement. Test lamps shall be allowed to cool 2 ± 1 minute between tests.

10.2.4 Circuit for Lamp Starting Time and Preheat Time Tests (see Fig. 1). The normal lamp circuit is used. A variable voltage transformer also is used to adjust the primary voltage. A timer is used to indicate total lamp starting time, where a photocell serves to turn off the timer when the lamp lights. A second timer, in conjunction with a current sensitive relay (maximum impedance ten ohms) is used to measure the accumulated preheat (starter contacts closed) time before the lamp starts. Where lead-lag ballasts are used, the companion circuit shall not be loaded with a lamp.

10.3 Test of Lockout Mechanism

10.3.1 Circuit Opening. Starters equipped with current sensitive circuit-opening devices designed to disconnect the preheat circuit at lamp deactivation shall be tested for proper functioning of the lockout mechanism at minimum and maximum preheat current as specified in American National Standard C78-1969. This determination shall be made using the circuit prescribed in 10.3.3 (see Fig. 2). Lockout time shall be the elapsed interval between the closing of the supply switch and the final opening of the lockout device. Lockout time shall be not less than 20 seconds at maximum preheat current and not more than 5 minutes at minimum preheat current. There shall be no automatic reclosing of the lockout device until the lamp is replaced or the power interrupted.

Copyright National Electrical Manufacturers Association
Provided by IHS under license with NEMA
No reproduction or networking permitted without license from IHS
Not for Resale

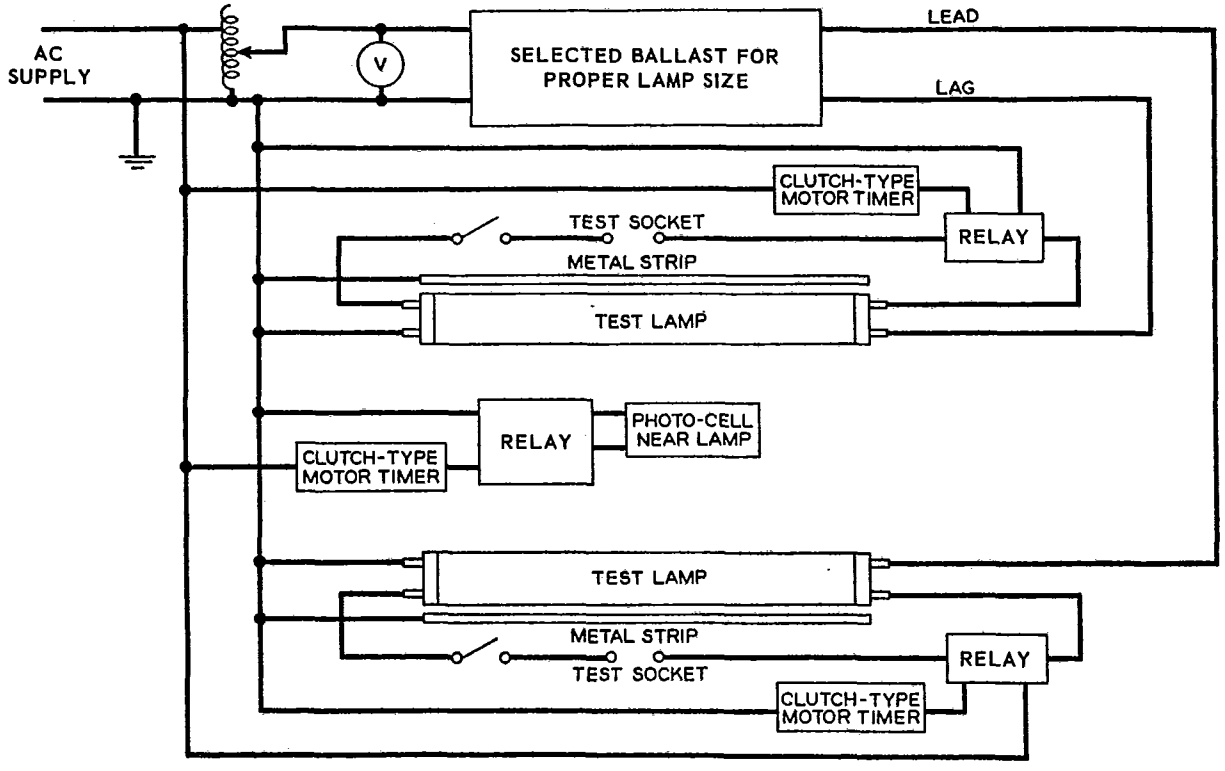

Fig. 1
Circuit for Lamp Starting-Time and Preheat Time Tests

Requirements for voltage sensitive circuit-opening devices for this purpose are under consideration.

10.3.2 Reclosing. After the lockout device has opened the circuit as prescribed in 10.3.1, the device, if it is of the automatic-reset type, shall reset within three minutes after the power has been interrupted. If the device is of the manual-reset type, it shall be capable of being reset within three minutes after it has cut out. When reset, the starter shall permit the normal lighting of a test lamp of the proper rating in compliance with 10.2.1.

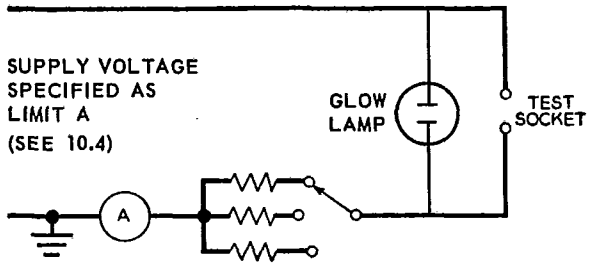

Fig. 2
Circuit for Lockout Opening and Reclosing Checks

NOTE: Reclosing of starters will be indicated by the glow lamp extinguishing.

10.3.3 Circuit for Lockout Opening and Reclosing Checks. (See Fig. 2.) Resistances are selected to give the specified minimum, nominal, and maximum preheat currents of the principal type of lamp for which the starters were designed.

10.4 Voltage Characteristics of Voltage-Operated Starters. The rms voltage limit A, at and above which a starter switch shall close, initiate starter operation, and cause a test lamp to light, and the rms voltage limit B, at and below which the starter switch shall not reclose, measured across the starter terminals, shall be as follows:

Nominal Open-Circuit Voltage, (Volts)	Voltage Limit A, (Volts, rms)	Voltage Limit B, (Volts, rms)
118, 120	106	70*
150	132	95
200	176	128

10.4.1 Circuit for Checking Voltage Limits for Starters. (See Fig. 3.) Variable voltage transformers are

*In the case of starters specifically designated for use with lamps having lamp voltages of 50 volts or less (4- and 6-watt T-5, and 14- and 15-watt T-12 lamps), this limit may be dropped to 65 volts.

Copyright National Electrical Manufacturers Association
Provided by IHS under license with NEMA
No reproduction or networking permitted without license from IHS
Not for Resale

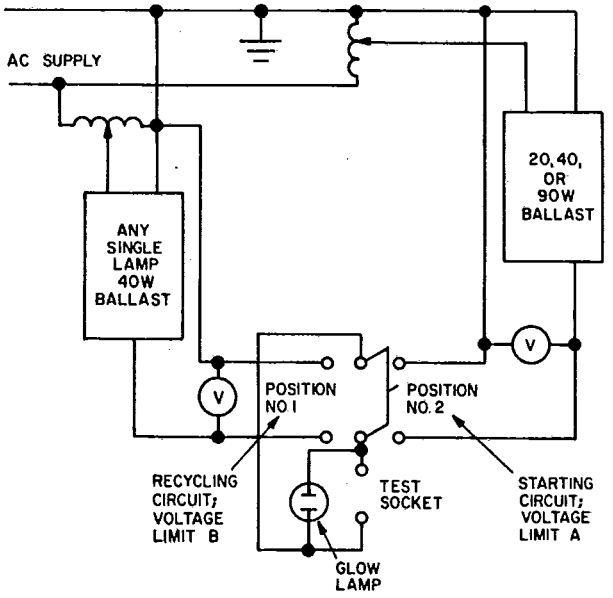

Fig. 3
Circuit for Checking Voltage Limits for Starters

used to adjust the primary voltages of the test circuits. In the starting position of the circuit, the ballast used for operating the starter should be of a 20, 40 or 90 watt rating depending on whether the starter being tested is intended for operation on nominal voltages of 120, 200 or 150 volts respectively. A switch is provided for switching from the starting portion of the circuit adjusted to voltage limit A to the recycling portion of the circuit adjusted to voltage limit B. A glow lamp or other indicator may be connected across the starter terminals.

10.4.2 Starting Voltage Test. Starters shall be tested in the starting portion of the circuit shown in Fig. 3 (position 2, see 10.4.1). The secondary voltage of the ballast in this portion of the circuit shall be adjusted to the value given under voltage limit A (see 10.4).

The test starter is placed in the test socket provided and switch closed into limit A, position 2. Within one minute the starter shall begin to function so as to light a fluorescent lamp, as indicated by the limit A voltmeter alternately indicating zero voltage and limit A voltage, or the glow lamp blinking off and on.

10.4.3 Recycling Voltage Test. Starters shall be tested in the recycling portion of the circuit shown in Fig. 3 (position 1, see 10.4.1). The test voltage shall be adjusted to the value given under voltage limit B (see 10.4).

The test starter is switched into the recycling portion of the test circuit (position 1) from the starting portion of the circuit (position 2) where it has been operating for approximately ten seconds. If the starter does not recycle within three minutes, as indicated by the limit B voltmeter showing zero voltage or the glow lamp extinguishing, it may be considered satisfactory.

10.5 Current Characteristics of Four-Pin Current-Operated Starters. The starter contacts shall remain open at 85 percent of rated lamp current.

10.6 Radio Interference Suppression. In order to assist in suppressing radio interference, starters shall contain a capacitor within the limits of 0.0048 to 0.06 microfarad connected internally in such a manner as to be effectively in parallel with the lamp.

10.7 Starting Test at Elevated Temperatures. Starters maintained at a temperature of 60°C ± 2°C (140°F) for 4 hours shall be capable of starting lamps within 30 seconds at rated supply voltage. For this test, the starters shall be at 60°C ± 2°C (140°F), and the lamps and the ballast at room temperature.

10.8 Endurance

10.8.1 Simple Starters. Starters which have no circuit-opening or cutout device shall be cycled in normal lamp circuits at intervals of 20 seconds on, 40 or more seconds off, at rated line volts for 6000 cycles. During the cycling test, half of the starters shall be tested in lead circuits and half in lag circuits. In addition, and at the completion of the cycling test, starters shall be subjected to a five-hour deactivated lamp test at rated line volts.

At the end of these tests, the starters shall be checked for lamp starting performance at rated line voltage and shall start both a lead and a lag lamp within 20 seconds in at least one out of two tests each. The circuit is shown in Fig. 1. Failure of more than 20 percent of the starters tested will be considered unacceptable.

10.8.2 Manual-Reset Lockout Starters. This type of starter shall be subjected to a cyclic endurance test in normal lamp circuits of 20 seconds on, 40 or more seconds off, at rated line volts for 8000 cycles. During the cycling test, half of the starters shall be tested in lead circuits and half in lag circuits. After each 2000 starts, the lockout mechanism shall be checked for operation at nominal preheat current by allowing it to lock out under conditions equivalent to a deactivated lamp (see 10.3). In each case, it shall lock out within 5 minutes and shall remain locked out for at least 6 minutes. At the completion of the 8000-cycle test, the starters shall be checked for performance at rated line volts and shall start both a lead and a lag lamp within 20 seconds in at least one out of two tests each. The

[2] If necessary, the off times specified in 10.8.1, 10.8.2, and 10.8.3 may be increased in order to make starters operate normally.

Copyright National Electrical Manufacturers Association
Provided by IHS under license with NEMA
No reproduction or networking permitted without license from IHS
Not for Resale

circuit is shown in Fig. 1. Failure of more than 20 percent of the starters tested will be considered unacceptable.

10.8.3 Automatic-Reset Lockout Starters. This type of starter shall be subjected to a cyclic endurance test in normal lamp circuits of 20 seconds on, 40 or more seconds off, at rated line volts for 8000 cycles. During the cycling test, half of the starters shall be tested in lead circuits and half in lag circuits. After each 2000 starts, the lockout mechanism shall be checked for operation at nominal preheat current by allowing it to lock out under conditions equivalent to a deactivated lamp (see 10.3). In each case, it shall lock out within 5 minutes and shall remain locked out for at least 15 minutes. At the completion of the 8000-cycle test, starters shall be checked for performance at rated line volts and shall start both a lead and a lag lamp within 20 seconds in at least one out of two tests each. The circuit is shown in Fig. 1.

A 72-hour lockout endurance test, starting with a locked out starter, shall be made in the circuit specified in 10.8.6 (Fig. 4), at 115 percent of the nominal open circuit voltage given in 10.4. For starters that are designed for 118 or 120 V nominal open circuit voltage applications, the 72-hour test shall be made at locked out conditions at 110 percent of nominal open circuit voltage.

Failure of more than 20 percent of the starters tested will be considered unacceptable.

10.8.4 Circuit for Lamp Starting Endurance Tests. The normal lamp circuit is used. When two-lamp ballasts are used, starters shall be equally distributed between lead and lag circuits. Suitable timers shall be provided to cycle the lamps in accordance with 10.8.1, 10.8.2, and 10.8.3.

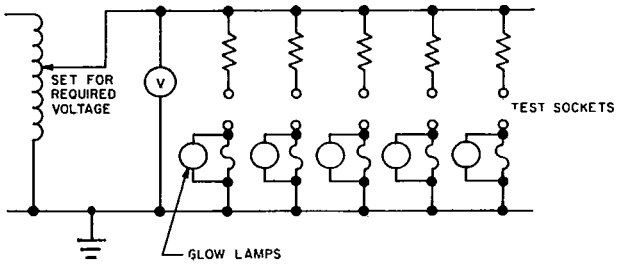

Fig. 4
Circuit for Lockout Endurance Test

NOTES:

(1) The number of test sockets is limited by the current rating of the variable power supply.

(2) Each individual starter circuit shall be fused. The fuse used shall be selected to blow when test voltage is applied across the ballast-fuse combination. A glow lamp connected across each fuse will serve to indicate fuse failure. Suggested resistor ratings are: approximately 300 ohms for 118 open circuit-volt (ocv) starters, 375 ohms for 150 ocv starters, and 500 ohms for 200 ocv starters.

The corresponding fuse rating is 1/4 *a*.

10.8.5 Circuit for Deactivated Lamp Endurance Tests. The normal lamp circuit is used. When two lamp ballasts are used, starters shall be equally distributed between lead and lag circuits. The test "lamps" shall be one of the following:

(1) Completely deactivated lamps

(2) Cathodes in separate lamps of the proper rating; that is, a pair of cathodes between which a discharge will neither strike nor maintain

(3) Dummy load resistances equivalent to the resistances of the cathodes as indicated in American National Standard C82.1-1968

10.8.6 Circuit for Lockout Endurance Test. (See Fig. 4.) This test is applicable only to the automatic-resetting type of lockout starters. In using this circuit, it is first necessary to operate the starter with a deactivated lamp, or the equivalent, in a proper ballast circuit until the lockout mechanism functions. Then, while the mechanism is locked out, the starter is transferred to the circuit shown in Fig. 4.

10.9 Proof Voltage Test. After the starting test at elevated temperature (10.7), and while they are still hot, starters shall be capable of withstanding for 1 minute, without breakdown, the application of a 60-Hz sine wave test potential of 900 rms volts between all live-metal parts and all exposed dead-metal parts.

10.10 Insulation Resistance. After completion of the proof voltage test, the insulation of a starter, measured between live-metal parts and exposed dead-metal parts, shall be such that the leakage current shall not exceed 0.2 milliampere at 250 volts, 60 Hz.

11. Dimensions

The dimensions of the starter enclosure, pins, and pin spacing, shall be within the limits shown in Fig. 5, Table 2.

12. Recommended Temperature Limits

In starters employing wax-impregnated paper capacitors, a maximum capacitor temperature limit of 65°C (149°F) is recommended.

13. Testing of Starters Intended for Operation on Direct Current

Copyright National Electrical Manufacturers Association
Provided by IHS under license with NEMA
No reproduction or networking permitted without license from IHS
Not for Resale

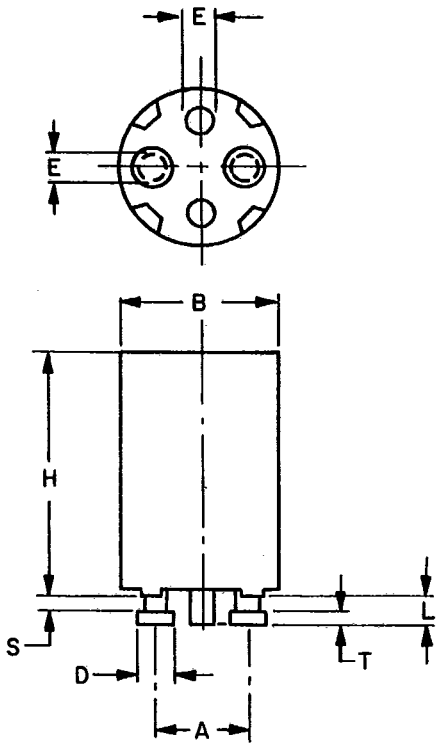

Fig. 5
Starter Dimensions

NOTE: Four-pin starters have two flanged pins and two straight pins arranged as shown in Fig. 5. Two-pin starters have only the flanged type of pins which are in the positions shown.

Table 2
Starter Dimensions

	Medium Size			
	Inches		Nearest Metric Equivalent, mm	
	Min	Max	Min	Max
A	0.492	0.508	12.5	12.9
B	—	0.847	—	21.5
D	0.185	0.197	4.7	5.0
E	0.110	0.126	2.8	3.2
H	1.298	1.417	33.0	36.0
L	—	0.169	—	4.3
S	0.067	—	1.7	—
T	0.075	0.087	1.9	2.2

	Mogul Size					
	Min		Max	Min		Max
A	—	0.594	—	—	15.09	—
B	—		1.140	—		28.96
D	0.185		0.197	4.7		5.0
E	0.110		0.126	2.8		3.2
H	1.75		1.875	44.45		47.62
L	—		0.169	—		4.3
S	0.067		—	1.7		—
T	0.075		0.087	1.9		2.2

When starters are marked for operation with either dc or ac supply, the performance requirements in 10.2 and 10.4 shall be met on dc as well as on 60-Hz ac supply.

NOTE: It is suggested that starters requiring insertion in the socket in a particular way for satisfactory operation on direct current be marked on the enclosure, "For best performance on direct current, try reversing starter," or an equivalent notice.

14. Conditions of Acceptance

14.1 Critical Requirements. The limits given in 10.2.1, 10.2.3, 10.8, 10.9, and 10.10 establish the critical requirements for acceptance.

14.2 Other Requirements. The following limits shall apply to the requirements of 10.2.2, 10.3.1, 10.3.2, 10.4, 10.5, and 10.7. The failure of more than 10 percent of the starters tested in any one requirement, or more than 20 percent of the starters tested in the sum total of these shall be considered grounds for rejection of the starters.

15. Revision of American National Standards Referred to in This Document

When the standards referred to in this document are superseded by a revision approved by the American National Standards Institute, the revision shall apply.

Copyright National Electrical Manufacturers Association
Provided by IHS under license with NEMA
No reproduction or networking permitted without license from IHS
Not for Resale

American National Standards

The standard in this booklet is one of nearly 4,000 standards approved to date by the American National Standards Institute, formerly the USA Standards Institute.

The Standards Institute provides the machinery for creating voluntary standards. It serves to eliminate duplication of standards activities and to weld conflicting standards into single, nationally accepted standards under the designation "American National Standards."

Each standard represents general agreement among maker, seller, and user groups as to the best current practice with regard to some specific problem. Thus the completed standards cut across the whole fabric of production, distribution, and consumption of goods and services. American National Standards, by reason of Institute procedures, reflect a national consensus of manufacturers, consumers, and scientific, technical, and professional organizations, and governmental agencies. The completed standards are used widely by industry and commerce and often by municipal, state, and federal governments.

The Standards Institute, under whose auspices this work is being done, is the United States clearinghouse and coordinating body for standards activity on the national level. It is a federation of trade associations, technical societies, professional groups, and consumer organizations. Some 1,000 companies are affiliated with the Institute as company members.

The American National Standards Institute is the United States member of the International Organization for Standardization (ISO), the International Electrotechnical Commission (IEC), and the Pan American Standards Commission (COPANT). Through these channels American industry makes its position felt on the international level. American National Standards are on file in the libraries of the national standards bodies of more than 50 countries.

For a free list of all American National Standards, write:

American National Standards Institute, Inc

1430 Broadway **New York, N. Y. 10018**

Copyright National Electrical Manufacturers Association
Provided by IHS under license with NEMA
No reproduction or networking permitted without license from IHS

Not for Resale