NEMA C78.1421 92 ■ 6470247 0508863 69T ■

American National Standard

C78.1421-1992

Dimensions and Centering Systems for Projection Lamps-35mm Integral Reflector Rim Reference Lamps with GZ4 Bases

NEMA

National Electrical
Manufacturers Association
2101 L Street, N.W.
Washington, D.C. 20037-1580
(202) 457-8409/1981

American National Standard

Copyright National Electrical Manufacturers Association
Provided by IHS under license with NEMA
No reproduction or networking permitted without license from IHS

Not for Resale

ANSI®
C78.1421-1992
New Standard

American National Standard
for Electric Lamps -

Dimensions and Centering Systems for Projection Lamps - 35mm Integral Reflector Rim Reference Lamps with GZ4 Bases

Secretariat

Accredited Standards Committee C78
National Electrical Manufacturers Association

Approved September 15, 1992

American National Standards Institute, Inc.

Copyright National Electrical Manufacturers Association
Provided by IHS under license with NEMA
No reproduction or networking permitted without license from IHS

Not for Resale

AMERICAN NATIONAL STANDARD

Approval of an American National Standard requires verification by ANSI that the requirements for due process, consensus, and other criteria for approval have been met by the standards developer.

Consensus is established when, in the judgment of the ANSI Board of Standards Review, substantial agreement has been reached by directly and materially affected interests. Substantial agreement means much more than a simple majority, but not necessarily unanimity. Consensus requires that all views and objections be considered, and that a concerted effort be made toward their resolution.

The use of American National Standards is completely voluntary; their existence does not in any respect preclude anyone, whether he has approved the standards or not, from manufacturing, marketing, purchasing, or using products, processes, or procedures not conforming to the standards.

The American National Standards Institute does not develop standards and will in no circumstances give an interpretation of any American National Standard. Moreover, no person shall have the right or authority to issue an interpretation of an American National Standard in the name of the American National Standards Institute. Requests for interpretations should be addressed to the secretariat or sponsor whose name appears on the title page of this standard.

CAUTION NOTICE: This American National Standard may be revised or withdrawn at any time. The procedures of the American National Standards Institute require that action be taken periodically to reaffirm, revise, or withdraw this standard. Purchasers of American National Standards may receive current information on all standards by calling or writing the American National Standards Institute.

Published by

Accredited Standards Committee C78 Secretariat
National Electrical Manufacturers Association
2101 L Street, N.W., Suite 317 Washington, D.C. 20037

Copyright © 1992 by the ANS C78 Secretariat, National Electrical Manufacturers Association
All Rights reserved

No part of this publication may be reproduced in any
form, in an electronic retrieval system or otherwise,
without prior written permission of the publisher.

Printed in the United States of America

Copyright National Electrical Manufacturers Association
Provided by IHS under license with NEMA
No reproduction or networking permitted without license from IHS
Not for Resale

Foreword (This Foreword is not part of American National Standard C78.1421-1992).

Suggestions for improvement of this standard will be welcome. They should be sent to the Secretariat, C78-5 Subcommittee, National Electrical Manufacturers Association, 2101 L Street, NW, Washington, DC 20037.

This standard was processed and approved for submittal to the American National Standard Institute (ANSI) by the Accredited Standards Committee C78 on Electric Lamps. The actual development of the standard was accomplished by the C78-5 Subcommittee on Photographic, Stage, and Studio Lamps. Committee approval of this standard does not necessarily imply that all committee members voted for its approval.

Ted A. Pickett, Chairman, C78
Alfred C. Rousseau, Vice Chairman
Randolph N. Roy, Committee Secretariat
Joyse Witheridge, Coordinating Editor

Organization Represented	*Name of Representative*
Advance Transformer Company	Norm Grimshaw
Duro-Test Corporation	Herbert Strauss
General Electric Company	Ted A. Pickett
GTE Production/Sylvania Lighting Division	Robert Bonazoli
	David H. Fox
Illuminating Engineering Society	Melvin Unglert
	Rita M. Harrold
National Electrical Manufacturers Association	Ron Runkles
Philips Lighting Co.	Alfred C. Rousseau
OSRAM Corporation	Peter Bleasby
Valmont Electric	Fritz Friedenstein
Wilger Liaison Company, Inc.	Gerald M. Plank, Jr.

Copyright National Electrical Manufacturers Association
Provided by IHS under license with NEMA
No reproduction or networking permitted without license from IHS
Not for Resale

William Moore, Chairman, C78-5
Randolph N. Roy, Committee Secretariat
Joyse Witheridge, Coordinating Editor

Organization Represented	Name of Representative
Assn. For Educational Communications and Technology, Purdue University	John Wilshusen
Barbizon Electric Co., Inc.	Sidney L. Bloom
	Samuel Resnick
Eastman Kodak Company	William E. Moore
ETL Testing Laboratories	Steve Pasternak
General Electric Company	Jack Baldrige
	Ralph F. Kaiser
Colortran, Inc.	Ken Vannice
Lighting Sciences, Inc.	Lloyd Stafford
OSRAM Corporation	Peter A. Bleasby
	F. Stephen Henry
Philips Lighting Company	Steve Sirek
	Jerry Smith
Sylvania Lighting Division	David H. Fox
	Dave Puckett
3M Company	Darrell D. Walker

Copyright National Electrical Manufacturers Association
Provided by IHS under license with NEMA
No reproduction or networking permitted without license from IHS
Not for Resale

CONTENTS Page

Foreword ii

1 Scope 1

2 Normative references 1

3 Related Components 3
3.1 Identification 3
3.2 Bases 3
3.3 Holding System 3

4 Lamp Dimensions 3

5 Centering Devices 3
5.1 Critical Dimensions 3
5.2 Precise Centering System 3
5.3 Alternative Center System 3

Figure

1 Figure 1 Lamp Dimensions 4

2 Figure 2 Centering Systems 5

Copyright National Electrical Manufacturers Association
Provided by IHS under license with NEMA
No reproduction or networking permitted without license from IHS
Not for Resale

AMERICAN NATIONAL STANDARD **ANSI C78.1421-1992**

Dimensions and Centering Systems for Projection Lamps - 35mm Integral Reflector Rim Reference Lamps with GZ4 Bases

1 Scope

This standard specifies the detailed lamp dimensions for those lamps in the family of 1.38 inch (35mm) integral reflector, rim reference, lamps with GZ4 bases such that interchangeability with the appropriate holding system will be assured. These lamps provide reference for mounting at the lamps' reflector rim. Since lamp position is controlled at the reflector rim, the dimensions of the centering device of the holding system are covered also.

2 Normative References

This standard is intended for use with the following American National Standards. When these standards are superseded by a revision approved by The American National Standards Institute Inc., the revision shall apply.

ANSI C78.370-1982,	*Method of Designation of Photo Lamps*
ANSI C78.1401-1975(R1987),	*Dimensions of Projection Lamps, Double-Contact, Medium Ring, Base Up Type*
ANSI C78.1402-1975(R1987),	*Dimensions of Projection Lamps, Four-Pin, Prefocus, Base-Down Type*
ANSI C78.1403-1989,	*ANS for Electric Lamps - FCS Projection Lamps*
ANSI C78.1404-1989,	*ANS for Electric Lamps - DNF Projection Lamps*
ANSI C78.1405-1991,	*ANS for Electric Lamps - ELH Projection Lamps*
ANSI C78.1406-1983(R1989),	*Dimensions of Projection Lamps, Single-Contact, Medium Prefocus Base-Down Type*
ANSI C78.1407-1985(R1991),	*Dimensions for Projection Lamps, Condenser-Reflector, Four-Pin Prefocus Base Types*

Copyright National Electrical Manufacturers Association
Provided by IHS under license with NEMA
No reproduction or networking permitted without license from IHS
Not for Resale

ANSI C78.1408-1991,	*ANS for Electric Lamps - CBA Projection Lamps*
ANSI C78.1409-1991,	*ANS for Electric Lamps - EJL Projection Lamps*
ANSI C78.1410-1991,	*ANS for Electric Lamps - ELB Projection Lamps*
ANSI C78.1411-1991,	*ANS for Electric Lamps - ELC Projection Lamps*
ANSI C78.1412-1991,	*ANS for Electric Lamps - EMM Projection Lamp*
ANSI C78.1413-1989,	*ANS for Electric Lamps - Dimensions of Centering Systems Two Inch (51mm) Integral Reflector Rim Reference Projection Lamps*
ANSI C78.1414-1988,	*ANS for Electric Lamps - DDM Projection Lamp*
ANSI C78.1415-1989,	*ANS for Electric Lamps - DED Projection Lamp*
ANSI C78.1416-1991,	*ANS for Electric Lamps - FHS Projection Lamp*
ANSI C78.1417-1984,	*Projection Lamps, Dimensions and Centering System for 1.65 Inch (42mm) Integral Reflector with GX5.3 or GY5.3 Bases*
ANSI C78.1418-1984,	*ANS Electric Lamps - EYB Projection Lamp*
ANSI C78.1419-1991,	*ANS for Electric Lamps - EML Projection Lamp*
ANSI C78.1421-1991,	*ANS for Electric Lamps - Dimensions and Centering Systems for Projection Lamps - 35mm Integral Reflector Lamps with G4 Bases*
ANSI C78.1422-1991,	*ANS for Electric Lamps - ENG Projection Lamp*
ANSI C78.1423-1991,	*ANS for Electric Lamps - ENH Projection Lamp*
ANSI C78.1424-1991,	*ANS for Electric Lamps - EXR Projection Lamp*
ANSI C78.1425-1991,	*ANS for Electric Lamps - EXW Projection Lamp*
ANSI C78.1450-1983(R1989),	*Method for Life Testing - Incandescent Projection Lamp*
ANSI C78.1451-1988,	*ANS for Electric Lamps - Use of Protective Shields for Tungsten Halogen Lamps - Cautionary Notice*
ANSI C78.1452-1991,	*ANS for Electric Lamps - Projection Lamp - Vocabulary*
ANSI C78.1460-1991,	*ANS for Electric Lamps - Single ended Tungsten-Halogen Lamps with GZ9.5 Bases - TG Bulb, 36.5mm LCL, 76.2mm MOL with Proximity Reflector*
C81.40-1976,	*Electric Lamp Bases and Holders: Bipin and Bipost Types*[1]
C81.61-1990,	*Electric Lamp Bases*

[1] At the time of publication of this standard, the standard sheets dealing with electric lamp bases that appeared in ANSI C81.40-1976 and its supplements were superseded by ANSI C81.61-1990. The remaining standard sheets dealing with electric lamp holders and gauges are still in effect. Contact the secretariat for more recent information.

Copyright National Electrical Manufacturers Association
Provided by IHS under license with NEMA
No reproduction or networking permitted without license from IHS
Not for Resale

3 Related Components

3.1 Identification

Projection lamps conforming to this standard should be identified with 3-letter designations in conformance with ANSI C78.370-1982(R1989).

3.2 Bases

Finished lamps shall employ GZ4 bases conforming to the requirements and the gauges of the pending supplement to ANSI C81.40-1976. (See also C81.61-1990 and C81.53-1991).

3.3 Holding System

Definitions and requirements of various methods of holding the lamps are covered in ANSI C81.40. The holding system shall employ the centering device specified in Section 5.

4 Lamp Dimensions

Lamp Dimensions are specified in Figure 1. Only those dimensions essential to interchangeability are given. The drawn shape of the reflector and neck area are not intended to specify or restrict the outer surface of the lamp, beyond the restrictions imposed by the standard for the base. Lamps shall have full 360 degree circular rim reference surfaces.

5 Centering Devices

5.1 Critical dimensions of centering devices are specified in Figure 2.

5.2 **Precise centering system.** The most precise lamp centering system is the recessed device shown in Figure 2(a). Full 360 degree circular recesses are not necessary; two or three segments will suffice. The centering system shown in Figure 2(a) requires that the lamp be axially loaded such that surface x of the lamp mates to surface x of the centering device. Lateral location is restricted by surface y.

5.3 **Alternative centering system.** The alternative centering system shown in Figure 2(b) permits slightly greater displacement of the lamp's axis as determined by the tolerance of the flashline diameter.

The centering system shown in Figure 2(b) requires both an axial load component and a lateral load component such that surface x of the lamp mates to the surface x of the centering device and the major diameter A of the lamp mates to the studs defined by dimensions A1, A2, A3, and V.

Copyright National Electrical Manufacturers Association
Provided by IHS under license with NEMA
No reproduction or networking permitted without license from IHS Not for Resale

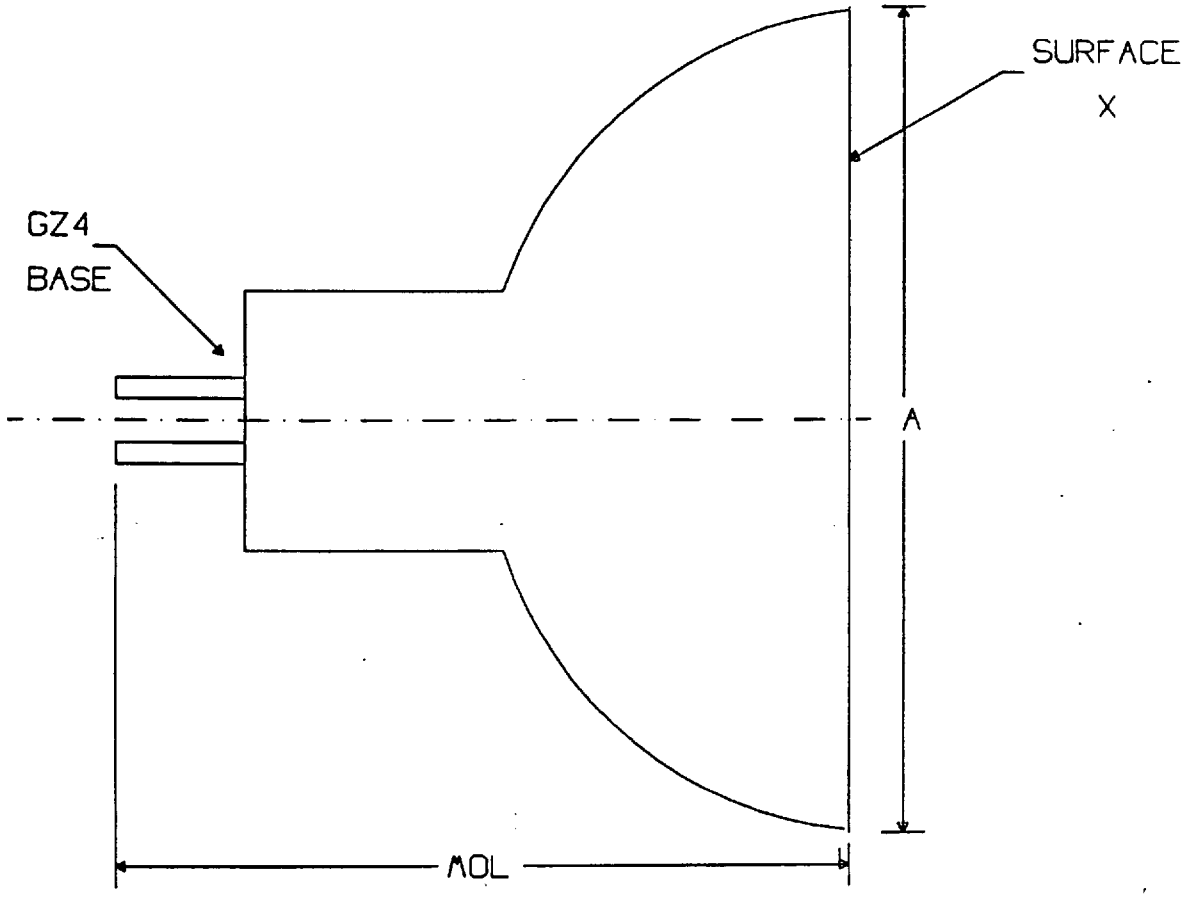

Reference	Standard Dimensions in			Nearest Metric Equivalent (mm)		
	Min	Nom	Max	Min	Nom	Max
A	1.350	--	1.390	34.3	--	35.3
MOL	--	--	1.575	--	--	40.0

FIGURE 1
Lamp Dimensions

Copyright National Electrical Manufacturers Association
Provided by IHS under license with NEMA
No reproduction or networking permitted without license from IHS
Not for Resale

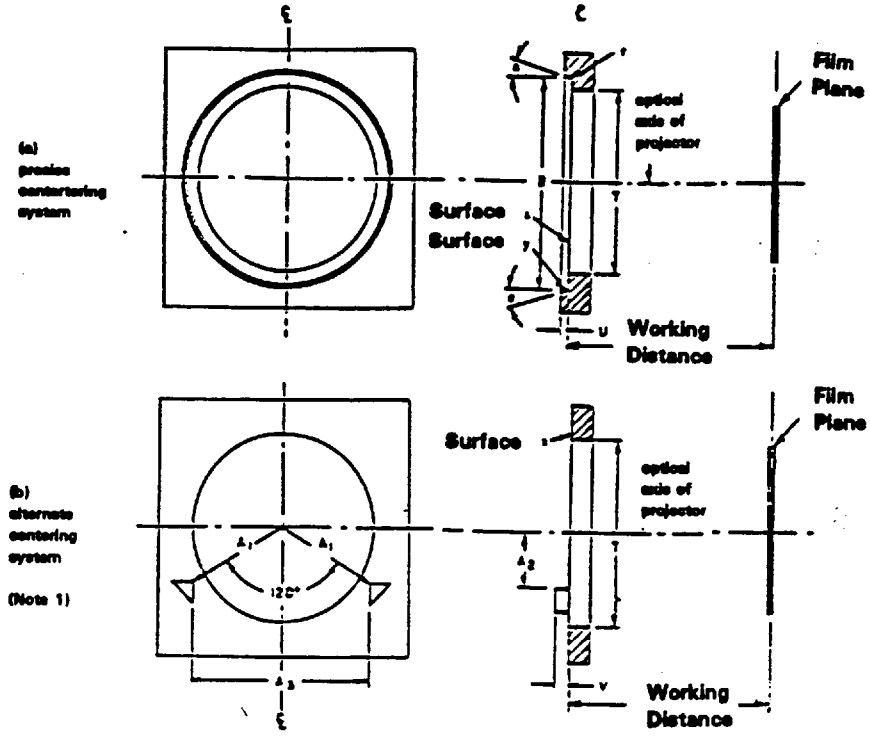

Reference	Standard Dimensions (inches) Min	Nom	Max	Standard Dimensions (millimeters) Min	Nom	Max
A1	--	0.689	--	--	17.50	--
A2	--	0.344	--	--	8.75	--
A3	--	1.193	--	--	30.30	--
B (Note 2)	1.394	--	1.402	35.40	--	35.60
r	--	--	0.010	--	--	0.25
T	--	--	1.260	--	--	32.00
U	0.055	--	0.065	1.40	--	1.65
V	0.085	--	--	2.16	--	--
A	14.5°	--	15.5°	14.5°	--	15.5°

• Working distance is the distance from the reference surface x to the plane of the film gate. The value of the working distance is determined by the optical systems for which the lamp is originally designed

Note 1: Figure 2(b) defines an existing centering system. Angles other than 120°, and dimensions A2 and A3 as shown, may be appropriate.

Note 2: Dimension B defines the diameter of reference surface y at distance U from reference surface x.

Note 3: The drawing is intended to show the dimensions to be controlled.

FIGURE 2
Centering Systems

Copyright National Electrical Manufacturers Association
Provided by IHS under license with NEMA
No reproduction or networking permitted without license from IHS
Not for Resale