American National Standard

ANSI C78.1420-1994

Dimensions of Centering Systems for Projection Lamps—Two-Inch (51 mm) Integral Reflector Rim Reference Tungsten—Halogen Lamps with GX5.3 Bases

NEMA

National Electrical Manufacturers Association
2101 L Street, N.W.
Suite 300
Washington, DC 20037-1526
(202) 457-8400

American National Standard

Copyright National Electrical Manufacturers Association
Provided by IHS under license with NEMA
No reproduction or networking permitted without license from IHS

Not for Resale

NEMA C78.1420 94 ■ 6470247 0508820 2T4 ■

ANSI C78.1420-1994

American National Standard
for Electric Lamps—

Dimensions of Centering Systems for Projection Lamps— Two-Inch (51 mm) Integral Reflector Rim Reference Tungsten–Halogen Lamps with GX5.3 Bases

Secretariat
Accredited Standards Committee C78

National Electrical Manufacturers Association

Approved May 23, 1994
American National Standards Institute

Copyright National Electrical Manufacturers Association
Provided by IHS under license with NEMA
No reproduction or networking permitted without license from IHS

Not for Resale

American National Standard

Approval of an American National Standard requires verification by ANSI that the requirements for due process, consensus, and other criteria for approval have been met by the standards developer.

Consensus is established when, in the judgment of the ANSI Board of Standards Review, substantial agreement has been reached by directly and materially affected interests. Substantial agreement means much more than a simple majority, but not necessarily unanimity. Consensus requires that all views and objections be considered, and that a concerted effort be made toward their resolution.

The use of American National Standards is completely voluntary; their existence does not in any respect preclude anyone, whether he has approved the standards or not, from manufacturing, marketing, purchasing, or using products, processes, or procedures not conforming to the standards.

The American National Standards Institute does not develop standards and will in no circumstances give an interpretation of any American National Standard. Moreover, no person shall have the right or authority to issue an interpretation of an American National Standard in the name of the American National Standards Institute. Requests for interpretations should be addressed to the secretariat or sponsor whose name appears on the title page of this standard.

CAUTION NOTICE: This American National Standard may be revised or withdrawn at any time. The procedures of the American National Standards Institute require that action be taken periodically to reaffirm, revise, or withdraw this standard. Purchasers of American National Standards may receive current information on all standards by calling or writing the American National Standards Institute.

Published by

National Electrical Manufacturers Association
2101 L Street, N.W. Suite 300, Washington, D.C. 20037

Copyright © 1994 National Electrical Manufacturers Association
All rights reserved.

No part of this publication may be reproduced in any form, in an electronic retrieval system or otherwise, without prior written permission of the publisher.

Printed in the United States of America

Copyright National Electrical Manufacturers Association
Provided by IHS under license with NEMA
No reproduction or networking permitted without license from IHS

Not for Resale

Contents

PAGE

Foreword ii

1 Scope 1

2 Normative references 1

3 Lamps 1

Lamp designations

DDS 3

DDL 5

EPV 7

EPX 9

EPZ 11

EYG 13

FHX 15

DJT 17

FJX 19

Annex

A Component layouts and dimensions for lamp projection systems

DDS 23

DDL 25

EPV 27

EPX 29

EPZ 31

EYG 33

FHX 35

DJT 37

FJX 39

Copyright National Electrical Manufacturers Association
Provided by IHS under license with NEMA
No reproduction or networking permitted without license from IHS
Not for Resale

Foreword (This Foreword is not part of American National Standard C78.1420-1994)

This edition of the American National Standard is for Electric Lamps – Lamp Descriptions – DDS, DDL, EPV, EPX, EPZ, EYG, FHX, DJT and FJX.

Historically, standards have been issued for individual lamp designations. This standard combines the descriptions, ratings, performance values, restrictions, physical characteristics, test procedures and drawings for each of the nine lamps.

Suggestions for improvement of this standard will be welcome. They should be sent to the Secretariat, C78 Committee, National Electrical Manufacturers Association, 2101 L Street, N.W., Suite 300, Washington, DC 20037.

This standard was processed and approved for submittal to ANSI by Accredited Standards Committee on Electric Lamps, C78 and ASC Subcommittee on Photographic, Stage and Studio Lamps, C78-5. Committee approval of the standard does not necessarily imply that all committee members voted for its approval. At the time of publication of this standard Main Committee C78 and Subcommittee C78-5 members were:

Al Rousseau, Chair, C-78
Randolph N. Roy, Secretariat
Ralph F. Kaiser, Technical Coordinator
Joyse Witheridge, Coordinating Editor

Organization Represented	*Name of Representative*
Advance Transformer Company	Norman Grimshaw
Duro-Test Corporation	Herbert Strauss
Edison Electric Institute	William Maguire (Delegate)
Electrical Testing Laboratories	Craig Davenport
General Electric	Ralph Kaiser
Illuminating Engineering Society	Rita M. Harrold
National Electrical Manufacturers Association	Richard Snow (Delegate)
OSRAM SYLVANIA INC.	Peter Bleasby
Philips Lighting Company	Al Rousseau
Underwriters Laboratories, Inc.	Kevin Kanakos

William Moore, Chair, C78-5
Randolph N. Roy, Secretariat

Barbizon Electric Company	Sidney L Bloom
	Samuel Resnick (Alt)
Eastman Kodak Company	William Moore
General Electric	Cynthia Minshall
	Ralph Kaiser (Alt)
OSRAM SYLVANIA INC.	Dave Fox
	Jeffrey Buschmann (Alt)
Philips Lighting Company	Steve Sirek
	Jerry Smith (Alt)

Copyright National Electrical Manufacturers Association
Provided by IHS under license with NEMA
No reproduction or networking permitted without license from IHS
Not for Resale

AMERICAN NATIONAL STANDARD ANSI C78.1420-1994

American National Standard for Electric Lamps—

Dimensions of Centering Systems—Two-Inch (51 mm) Integral Reflector Rim Reference Tungsten-Halogen Lamps with GX5.3 Bases

1 Scope

This standard specifies the general information for nine lamps in the family of condensing, dichroic, two-inch (51 mm) integral reflector, rim reference tungsten-halogen lamps with GX5.3 bases such that interchangeability with the appropriate holding system will be assured. Lamp applications apply to microfilm uses. Lamp base specifications are contained in C81.61-1990.

2 Normative references

The following standards contain provisions which, through reference in this text, constitute provisions of this American National Standard. At the time of publication, the editions indicated were valid. All standards are subject to revision, and parties to agreements based on this American National Standard are encouraged to investigate the possibility of applying the most recent editions of the standards indicated below.

ANSI C78.1413-1989, *Electric Lamps, Two-Inch (51 mm) Integral-Reflector-Rim Reference Projection Lamps Dimensions of Centering Systems*

ANSI C78.1450-1983(R1989), *Method for Life Testing, Incandescent Projection Lamps*

ANSI C81.61-1990, *Electrical Lamp Bases*

IEC 682-1980, *Standard Method of Measuring the Pinch Temperature of Quartz-Halogen Lamps*

PH7-201-1983 (R1988), *ANS Illumination Tests for Photographic Still-Front-Projection Equipment*

3 Lamps

Following are descriptions of projection lamps.

Copyright National Electrical Manufacturers Association
Provided by IHS under license with NEMA
No reproduction or networking permitted without license from IHS
Not for Resale

This page intentionally left blank.

Copyright National Electrical Manufacturers Association
Provided by IHS under license with NEMA
No reproduction or networking permitted without license from IHS
Not for Resale

Lamp description

Designation Symbol: DDS

Type:	Condensing, dichroic, two-inch (51 mm), integral reflector, rim-reference tungsten-halogen lamp.
Base:	GX5.3
Application:	Microfilm

Ratings

Wattage	80 watts
Voltage	21 volts
Life	1000 hours
Working Distance	165 mm
Correlated Color Temperature	3125 K

Performance

Screen illuminance	60 nominal center footcandles
Corner/center ratio	70% nominal

NOTE—The representative values shown were obtained with a typical projection system as described in the Annex.

Restrictions

Operating position	Base down to horizontal plus 15°
Temperature limits	350°C max. on seals
	250°C min. on bulb
Protective Shield	See Cautionary Notice

Cautionary notice

To assure maximum safety during handling and use of the subject lamps, the following notices should be observed:

1. Tungsten-halogen lamps operate at high temperature and at Internal gas pressures above atmospheric pressure. Consequently, a lamp could shatter. Certain lamps may also emit some amount of ultraviolet radiation. Therefore a suitable protective shield, screening technique, or both shall be used with the luminaire to protect people and surroundings from both hazards.

2. Always read and observe the information contained in the lamp manufacturer's caution notice.

Physical characteristics

Base Specifications:

GX5.3; see ANSI C81.61-1990.

Dimensions

General Dimensions for this type of lamp are covered in ANSI C78.1413-1989.

Copyright National Electrical Manufacturers Association
Provided by IHS under license with NEMA
No reproduction or networking permitted without license from IHS
Not for Resale

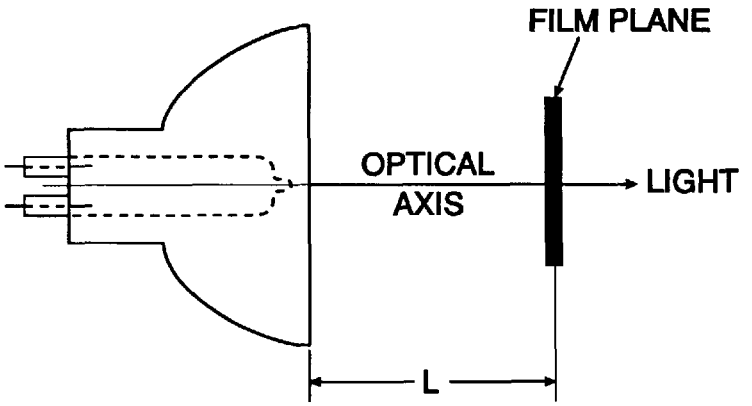

Standard Dimensions (millimeters)			
Reference	Minimum	Nominal	Maximum
L	-	165	-

Figure 1 – Dimensions (working distance) for DDS projection lamp

Test procedures

Life	Open rack, horizontal burning position with cooling to maintain temperature limits in accordance with ANSI C78.1450-1983.
Illumination	See ANSI PH7-201-1983 (1989)
Seal Temperature	Measurement procedure is defined in IEC 682.
Operating Temperature	Standard method of measuring other lamp operating temperatures (bulb and base) are under consideration.

Copyright National Electrical Manufacturers Association
Provided by IHS under license with NEMA
No reproduction or networking permitted without license from IHS
Not for Resale

Lamp description

Designation Symbol: DDL

Type: Condensing, dichroic, two-inch (51 mm), integral reflector, rim-reference tungsten-halogen lamp.
Base: GX5.3
Application: Microfilm

Ratings

Wattage	150 watts
Voltage	20 volts
Life	500 hours
Working Distance	197 mm
Correlated Color Temperature	3150 K

Performance

Screen Illuminance	70 nominal center footcandles
Corner/center ratio	80% nominal

NOTE—The representative values shown were obtained with a typical projection system as described in the Annex .

Restrictions

Operating position	Base down to horizontal plus 15°
Temperature limits	350°C max. on seals
	250°C min. on bulb
Protective shield	See Cautionary Notice

Cautionary notice

To assure maximum safety during handling and use of the subject lamps, the following notices should be observed:

1. Tungsten-halogen lamps operate at high temperature and at internal gas pressures above atmospheric pressure. Consequently, a lamp could shatter. Certain lamps may also emit some amount of ultraviolet radiation. Therefore a suitable protective shield, screening technique, or both shall be used with the luminaire to protect people and surroundings from both hazards.

2. Always read and observe the information contained in the lamp manufacturer's caution notice.

Physical characteristics

Base Specifications:

GX5.3; see ANSI C81.61-1990.

Dimensions

General Dimensions for this type of lamp are covered in ANSI C78.1413-1989.

Copyright National Electrical Manufacturers Association
Provided by IHS under license with NEMA
No reproduction or networking permitted without license from IHS
Not for Resale

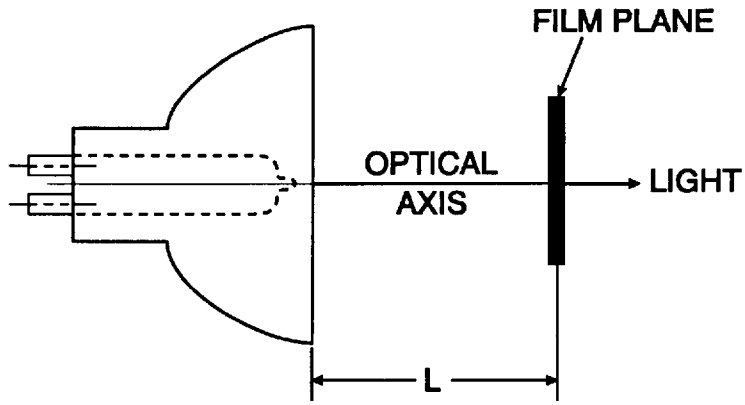

Standard Dimensions (millimeters)			
Reference	Minimum	Nominal	Maximum
L	-	197	-

Figure 2 – Dimensions (working distance) for DDL projection lamp

Test procedures

Life	Open rack, horizontal burning position with cooling to maintain temperature limits in accordance with ANSI C78.1450-1983.
Illumination	See ANSI PH3.705-1980.
Seal Temperature	Measurement procedure is defined in IEC 682.
Operating Temperature	Standard method of measuring other lamp operating temperatures (bulb and base) are under consideration.

Copyright National Electrical Manufacturers Association
Provided by IHS under license with NEMA
No reproduction or networking permitted without license from IHS
Not for Resale

Lamp description

Designation Symbol: EPV

Type: Condensing, dichroic, two-inch (51 mm), integral reflector, rim-reference tungsten-halogen lamp.

Base: GX5.3

Application: Microfilm

Ratings

Wattage	90 watts
Voltage	14.5 volts
Life	500 hours
Working Distance	155 mm
Correlated Color Temperature	3150 K

Performance

Screen Illuminance	125 nominal center footcandles
Corner/center ratio	55% nominal

NOTE—The representative values shown were obtained with a typical projection system as described in the Annex .

Restrictions

Operating position	Base down to horizontal plus 15°
Temperature limits	350°C max. on seals
	250°C min. on bulb
Protective Shield	See Cautionary Notice

Cautionary notice

To assure maximum safety during handling and use of the subject lamps, the following notices should be observed:

1. Tungsten-halogen lamps operate at high temperature and at internal gas pressures above atmospheric pressure. Consequently, a lamp could shatter. Certain lamps may also emit some amount of ultraviolet radiation. Therefore a suitable protective shield, screening technique, or both shall be used with the luminaire to protect people and surroundings from both hazards.

2. Always read and observe the information contained in the lamp manufacturer's caution notice.

Physical characteristics

Base Specifications:

GX5.3; see ANSI C81.61-1990.

Dimensions

General Dimensions for this type of lamp are covered in ANSI C78.1413-1989.

Copyright National Electrical Manufacturers Association
Provided by IHS under license with NEMA
No reproduction or networking permitted without license from IHS
Not for Resale

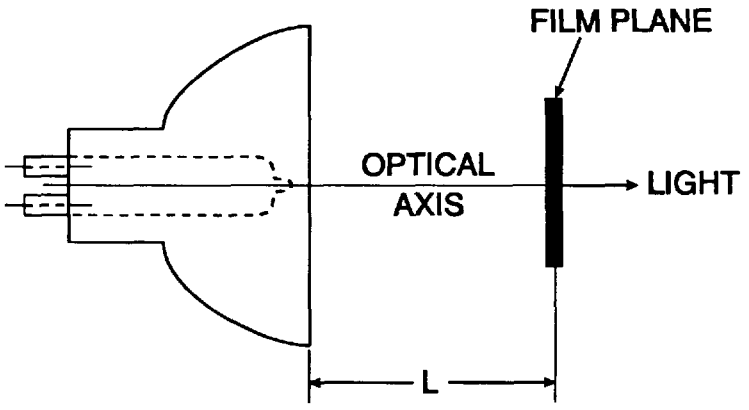

Standard Dimensions (millimeters)			
Reference	Minimum	Nominal	Maximum
L	-	155	-

Figure 3 – Dimensions (working distance) for EPV projection lamp

Test Procedures

Life	Open rack, horizontal burning position with cooling to maintain temperature limits in accordance with ANSI C78.1450-1983 (R1989).
Illumination	See ANSI PH7-201-1983 (R1989).
Seal Temperature	Measurement procedure is defined in IEC 682.
Operating Temperature	Standard method of measuring other lamp operating temperatures (bulb and base) are under consideration.

Copyright National Electrical Manufacturers Association
Provided by IHS under license with NEMA
No reproduction or networking permitted without license from IHS
Not for Resale

Lamp description

Designation Symbol: EPX

Type:	Condensing, dichroic, two-inch (51 mm), integral reflector, rim-reference tungsten-halogen lamp.
Base:	GX5.3
Application:	Microfilm

Ratings

Wattage	90 watts
Voltage	14.5 volts
Life	500 hours
Working Distance	165 mm
Correlated Color Temperature	3150 K

Performance

Screen Illuminance	50 nominal center footcandles
Corner/center ratio	60% nominal

NOTE—*The representative values shown were obtained with a typical projection system as described in the Annex.*

Restrictions

Operating position	Base down to horizontal plus 15°
Temperature limits	350°C max. on seals
	250°C min. on bulb
Protective Shield.	See Cautionary Notice

Cautionary notice

To assure maximum safety during handling and use of the subject lamps, the following notices should be observed:

1. Tungsten-halogen lamps operate at high temperature and at Internal gas pressures above atmospheric pressure. Consequently, a lamp could shatter. Certain lamps may also emit some amount of ultraviolet radiation. Therefore a suitable protective shield, screening technique, or both shall be used with the luminaire to protect people and surroundings from both hazards.

2. Always read and observe the information contained in the lamp manufacturer's caution notice.

Physical characteristics

Base Specifications:

GX5.3; see ANSI 81.61-1990.

Dimensions

General Dimensions for this type of lamp are covered in ANSI C78.1413-1989.

Copyright National Electrical Manufacturers Association
Provided by IHS under license with NEMA
No reproduction or networking permitted without license from IHS
Not for Resale

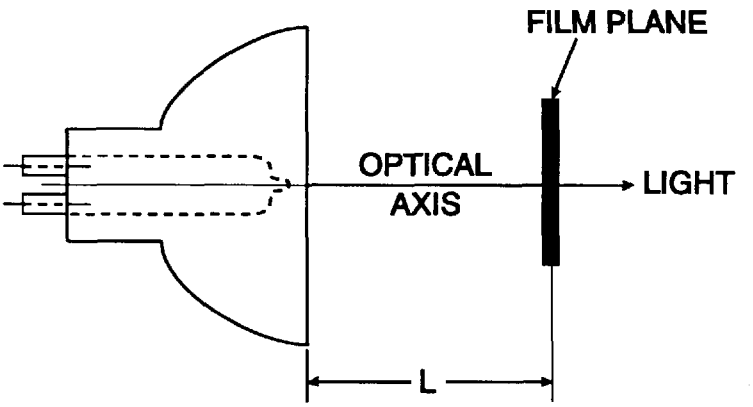

Standard Dimensions (millimeters)			
Reference	Minimum	Nominal	Maximum
L	-	165	-

Figure 4 – Dimensions (working distance) for EPX projection lamp

Test Procedures

Life	Open rack, horizontal burning position with cooling to maintain temperature limits in accordance with ANSI C78.1450-1983.
Illumination	See ANSI PH7-201-1983 (R1989).
Seal Temperature	Measurement procedure is defined in IEC 682.
Operating Temperature	Standard method of measuring other lamp operating temperatures (bulb and base) are under consideration.

Copyright National Electrical Manufacturers Association
Provided by IHS under license with NEMA
No reproduction or networking permitted without license from IHS
Not for Resale

Lamp description

Designation Symbol: EPZ

Type: Condensing, dichroic, two-inch (51 mm), integral reflector, rim-reference tungsten-halogen lamp.
Base: GX5.3
Application: Microfilm

Ratings

Wattage	50 watt
Voltage	13.8 volts
Life	1000 hours
Working Distance	108 mm
Correlated Color Temperature	3050 K

Performance

Screen Illuminance	50 nominal center footcandles
Corner/center ratio	70% nominal

NOTE—The representative values shown were obtained with a typical projection system as described in the Annex .

Restrictions

Operating position	Base down to horizontal plus 15°
Temperature limits	350°C max. on seals
	250°C min. on bulb
Protective Shield.	See Cautionary Notice

Cautionary notice

To assure maximum safety during handling and use of the subject lamps, the following notices should be observed:

1. Tungsten-halogen lamps operate at high temperature and at internal gas pressures above atmospheric pressure. Consequently, a lamp could shatter. Certain lamps may also emit some amount of ultraviolet radiation. Therefore a suitable protective shield, screening technique, or both shall be used with the luminaire to protect people and surroundings from both hazards.

2. Always read and observe the information contained in the lamp manufacturer's caution notice.

Physical characteristics

Base Specifications:

GX5.3; see ANSI C81.61-1990.

Dimensions

General Dimensions for this type of lamp are covered in ANSI C78.1413-1989.

Copyright National Electrical Manufacturers Association
Provided by IHS under license with NEMA
No reproduction or networking permitted without license from IHS
Not for Resale

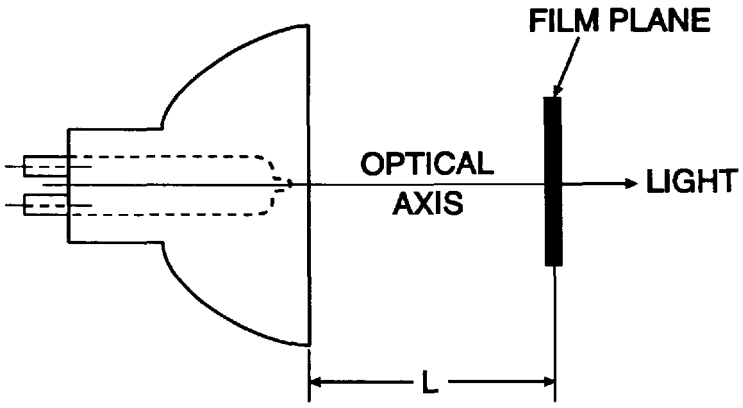

Standard Dimensions (millimeters)			
Reference	Minimum	Nominal	Maximum
L	-	108	-

Figure 5 – Dimensions (working distance) for EPZ projection lamp

Test Procedures

Life	Open rack, horizontal burning position with cooling to maintain temperature limits in accordance with ANSI C78.1450-1983 (R1989).
Illumination	See ANSI PH7-201-1983 (R1989).
Seal Temperature	Measurement procedure is defined in IEC 682.
Operating Temperature	Standard method of measuring other lamp operating temperatures (bulb and base) are under consideration.

Copyright National Electrical Manufacturers Association
Provided by IHS under license with NEMA
No reproduction or networking permitted without license from IHS
Not for Resale

Lamp description

Designation Symbol: EYG

Type: Condensing, dichroic, two-inch (51 mm), integral reflector rim-reference tungsten-halogen lamp.
Base: GX5.3
Application: Microfilm

Ratings

Wattage	25 watts
Voltage	13.8 volts
Life	500 hours
Working Distance	108 mm
Correlated Color Temperature	3150 K

Performance

Screen Illuminance	25 nominal center footcandles
Corner/center ratio.	80% nominal

NOTE—The representative values shown were obtained with a typical projection system as described in the Annex.

Restrictions

Operating position	Base down to horizontal plus 15°
Temperature limits	350°C max. on seals
	250°C min. on bulb
Protective Shield	See Cautionary Notice

Cautionary notice

To assure maximum safety during handling and use of the subject lamps, the following notices should be observed:

1. Tungsten-halogen lamps operate at high temperature and at Internal gas pressures above atmospheric pressure. Consequently, a lamp could shatter. Certain lamps may also emit some amount of ultraviolet radiation. Therefore a suitable protective shield, screening technique, or both shall be used with the luminaire to protect people and surroundings from both hazards.

2. Always read and observe the information contained in the lamp manufacturer's caution notice.

Physical characteristics

Base Specifications:

GX5.3; see ANSI C81.61-1990.

Dimensions

General Dimensions for this type of lamp are covered in ANSI C78.1413-1989.

Copyright National Electrical Manufacturers Association
Provided by IHS under license with NEMA
No reproduction or networking permitted without license from IHS
Not for Resale

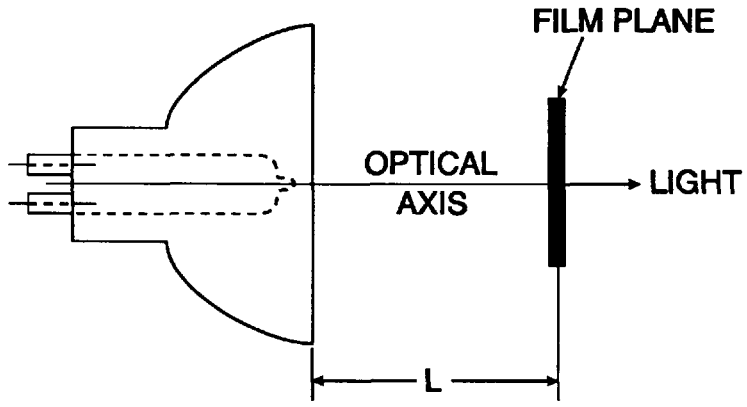

Standard Dimensions (millimeters)			
Reference	Minimum	Nominal	Maximum
L	-	108	-

Figure 6 – Dimensions (working distance) for EYG projection lamp

Test Procedures

Life	Open rack, horizontal burning position with cooling to maintain temperature limits in accordance with ANSI C78.1450-1983 (R1989).
Illumination	See ANSI PH7-201-1983 (R1989).
Seal Temperature	Measurement procedure is defined in IEC 682.
Operating Temperature	Standard method of measuring other lamp operating temperatures (bulb and base) are under consideration.

Copyright National Electrical Manufacturers Association
Provided by IHS under license with NEMA
No reproduction or networking permitted without license from IHS
Not for Resale

Lamp description

Designation Symbol: FHX

Type:	Condensing, dichroic, two-inch (51 mm), integral reflector, rim-reference tungsten-halogen lamp.
Base:	GX5.3
Application:	Microfilm

Ratings

Wattage	25 watts
Voltage	13.8 volts
Life	250 hours
Working Distance	108 mm
Correlated Color Temperature	3200 K

Performance

Screen Illuminance	30 nominal center footcandles
Corner/center ratio	70% nominal

NOTE—The representative values shown were obtained with a typical projection system as described in the Annex.

Restrictions

Operating position	Base down to horizontal plus 15°
Temperature limits	350°C max. on seals
	250°C min. on bulb
Protective Shield	See Cautionary Notice

Cautionary notice

To assure maximum safety during handling and use of the subject lamps, the following notices should be observed:

1. Tungsten-halogen lamps operate at high temperature and at Internal gas pressures above atmospheric pressure. Consequently, a lamp could shatter. Certain lamps may also emit some amount of ultraviolet radiation. Therefore a suitable protective shield, screening technique, or both shall be used with the luminaire to protect people and surroundings from both hazards.

2. Always read and observe the information contained in the lamp manufacturer's caution notice.

Physical characteristics

Base Specifications:

GX5.3; see ANSI C81.61-1990.

Dimensions

General Dimensions for this type of lamp are covered in ANSI C78.1413-1989.

Copyright National Electrical Manufacturers Association
Provided by IHS under license with NEMA
No reproduction or networking permitted without license from IHS
Not for Resale

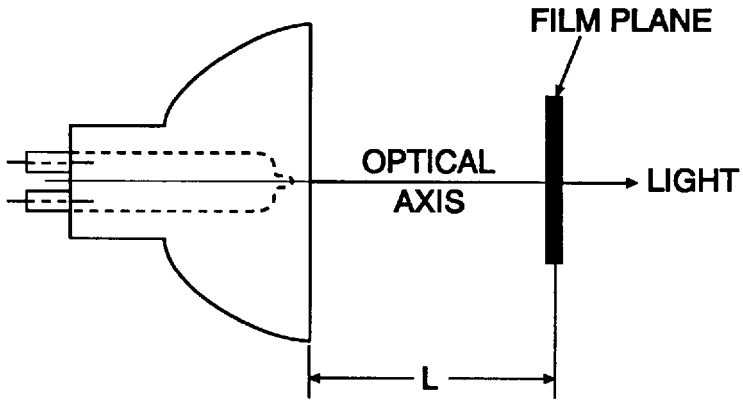

Standard Dimensions (millimeters)			
Reference	Minimum	Nominal	Maximum
L	-	108	-

Figure 7 – Dimensions (working distance) for FHX projection lamp

Test Procedures

Life	Open rack, horizontal burning position with cooling to maintain temperature limits in accordance with ANSI C78.1450-1983 (R1989).
Illumination	See ANSI PH7-201-1983 (R1989).
Seal Temperature	Measurement procedure is defined in IEC 682.
Operating Temperature	Standard method of measuring other lamp operating temperatures (bulb and base) are under consideration.

Copyright National Electrical Manufacturers Association
Provided by IHS under license with NEMA
No reproduction or networking permitted without license from IHS
Not for Resale

Lamp description

Designation Symbol: DJT

Type:	Condensing, dichroic, two-inch (51 mm), integral reflector, rim-reference tungsten-halogen lamp.
Base:	GX5.3
Application:	Microfilm

Ratings

Wattage	50 watts
Voltage	13.8 volts
Life	1000 hours
Working Distance	152 mm
Correlated Color Temperature	3050 K

Performance

Screen Illuminance	50 nominal center footcandles
Corner/center ratio	70% nominal

NOTE—The representative values shown were obtained with a typical projection system as described in the Annex.

Restrictions

Operating position	Base down to horizontal plus 15°
Temperature limits	350°C max. on seals
	250°C min. on bulb
Protective Shield	See Cautionary Notice

Cautionary notice

To assure maximum safety during handling and use of the subject lamps, the following notices should be observed:

1. Tungsten-halogen lamps operate at high temperature and at Internal gas pressures above atmospheric pressure. Consequently, a lamp could shatter. Certain lamps may also emit some amount of ultraviolet radiation. Therefore a suitable protective shield, screening technique, or both shall be used with the luminaire to protect people and surroundings from both hazards.

2. Always read and observe the information contained in the lamp manufacturer's caution notice.

Physical characteristics

Base Specifications:

GX5.3; see ANSI C81.61-1990

Dimensions

General Dimensions for this type of lamp are covered in ANSI C78.1413-1989.

Copyright National Electrical Manufacturers Association
Provided by IHS under license with NEMA
No reproduction or networking permitted without license from IHS
Not for Resale

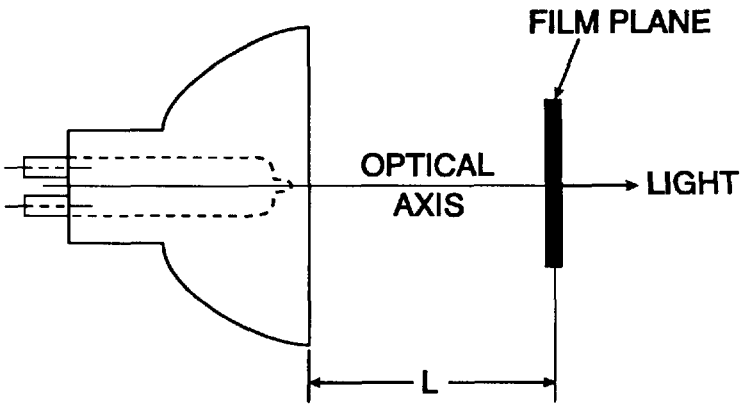

Standard Dimensions (millimeters)			
Reference	Minimum	Nominal	Maximum
L	-	152	-

Figure 8 – Dimensions (working distance) for DJT projection lamp

Test Procedures

Life	Open rack, horizontal burning position with cooling to maintain temperature limits in accordance with ANSI C78.1450-1983 (R1989).
Illumination	See ANSI PH7-201-1983 (R1989).
Seal Temperature	Measurement procedure is defined in IEC 682.
Operating Temperature	Standard method of measuring other lamp operating temperatures (bulb and base) are under consideration.

Copyright National Electrical Manufacturers Association
Provided by IHS under license with NEMA
No reproduction or networking permitted without license from IHS
Not for Resale

Lamp description

Designation Symbol: FJX

Type:	Condensing, dichroic, two-inch (51 mm), integral reflector, rim-reference tungsten-halogen lamp.
Base:	GX5.3
Application:	Microfilm

Ratings

Wattage	30 watts
Voltage	13.8 volts
Life	500 hours
Working Distance	108 mm
Correlated Color Temperature	3150 K

Performance

Screen Illuminance	25 nominal center footcandles
Corner/center ratio.	70% nominal

NOTE—The representative values shown were obtained with a typical projection system as described in the Annex.

Restrictions

Operating position	Base down to horizontal plus 15°
Temperature limits	400°C max on seals
	250°C min. on bulb
Protective Shield	See Cautionary Notice

Cautionary notice

To assure maximum safety during handling and use of the subject lamps, the following notices should be observed:

1. Tungsten-halogen lamps operate at high temperature and at Internal gas pressures above atmospheric pressure. Consequently, a lamp could shatter. Certain lamps may also emit some amount of ultraviolet radiation. Therefore a suitable protective shield, screening technique, or both shall be used with the luminaire to protect people and surroundings from both hazards.

2. Always read and observe the information contained in the lamp manufacturer's caution notice.

Physical characteristics

Base Specifications:

GX5.3; see ANSI C81.61-1990.

Dimensions

General Dimensions for this type of lamp are covered in ANSI C78.1413-1989.

Copyright National Electrical Manufacturers Association
Provided by IHS under license with NEMA
No reproduction or networking permitted without license from IHS
Not for Resale

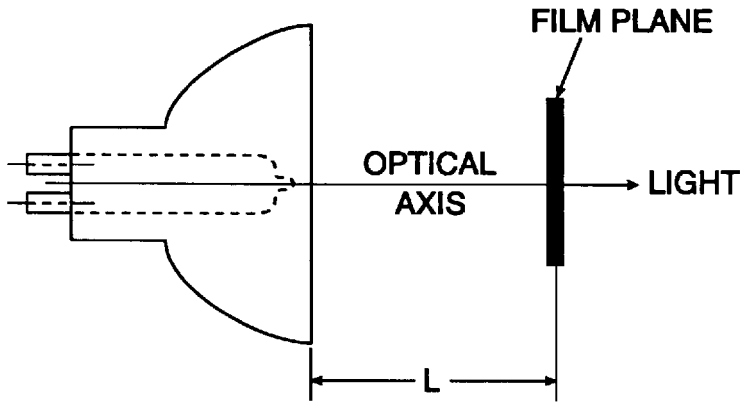

Standard Dimensions (millimeters)			
Reference	Minimum	Nominal	Maximum
L	-	108	-

Figure 9 – Dimensions (working distance) for FJX projection lamp

Test Procedures

Life	Open rack, horizontal burning position with cooling to maintain temperature limits in accordance with ANSI C78.1450-1983 (R1989).
Illumination	See ANSI PH7-201-1983 (R1989).
Seal Temperature	Measurement procedure is defined in IEC 682.
Operating Temperature	Standard method of measuring other lamp operating temperatures (bulb and base) are under consideration.

Copyright National Electrical Manufacturers Association
Provided by IHS under license with NEMA
No reproduction or networking permitted without license from IHS
Not for Resale

Annex A
(INFORMATIVE)

Component Layouts and Dimensions for Lamp Projection Systems

A.1 The following sheets are component layouts and dimensions for lamp projection systems.

Copyright National Electrical Manufacturers Association
Provided by IHS under license with NEMA
No reproduction or networking permitted without license from IHS

Not for Resale

This page intentionally left blank.

Copyright National Electrical Manufacturers Association
Provided by IHS under license with NEMA
No reproduction or networking permitted without license from IHS
Not for Resale

Component layout and dimensions for DDS lamp projection system

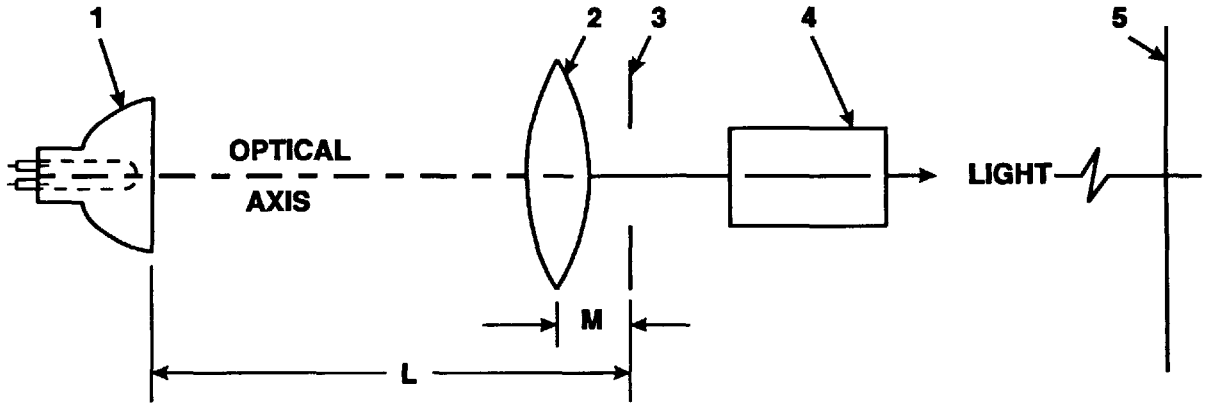

Layout A

Component	Description
1	DDS Lamp
2	Condenser Lens, Biconvex: Focal Length = 50 mm
3	Film Plane: Aperture Size 5.82 mm x 7.41 mm
4	Projection Lens: Focal Length = 17 mm f/no = f/2.8
5	Projected Image Plane: Image Size = 279.4 mm x 355.6 mm (11.0" x 14.0")
Reference	**Nominal Dimension**
L	165 mm
M	15.88 mm

Copyright National Electrical Manufacturers Association
Provided by IHS under license with NEMA
No reproduction or networking permitted without license from IHS
Not for Resale

This page intentionally left blank.

Copyright National Electrical Manufacturers Association
Provided by IHS under license with NEMA
No reproduction or networking permitted without license from IHS
Not for Resale

Component layout and dimensions for DDL lamp projection system

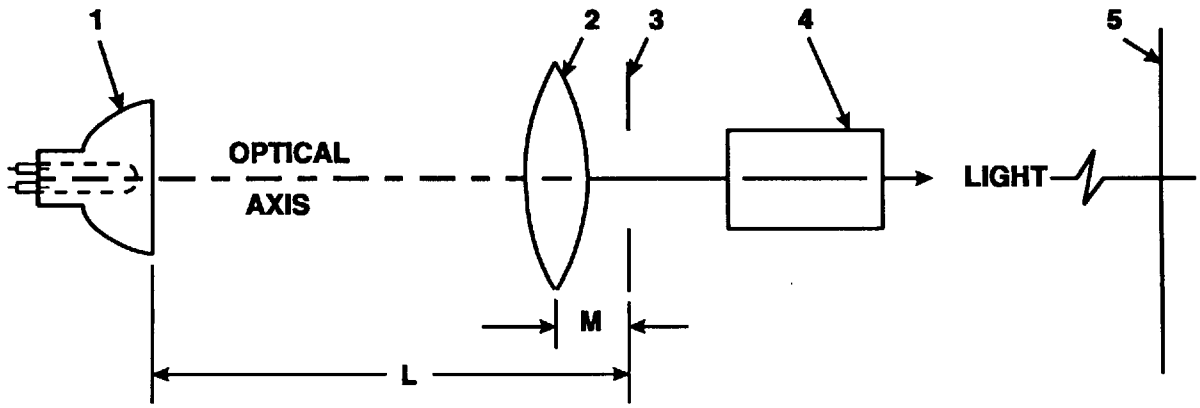

Layout A

Component	Description
1	DDL Lamp
2	Condenser Lens, Biconvex: Focal Length = 50 mm
3	Film Plane: Aperture Size 5.56 mm square
4	Projection Lens: Focal Length = 22 mm f/no = f/3.5
5	Projected Image Plane: Image Size = 266.7 mm (10.50") square
Reference	**Nominal Dimension**
L	197 mm
M	15.88 mm

Copyright National Electrical Manufacturers Association
Provided by IHS under license with NEMA
No reproduction or networking permitted without license from IHS
Not for Resale

This page intentionally left blank.

Copyright National Electrical Manufacturers Association
Provided by IHS under license with NEMA
No reproduction or networking permitted without license from IHS

Not for Resale

Component layout and dimensions for EPV lamp projection system

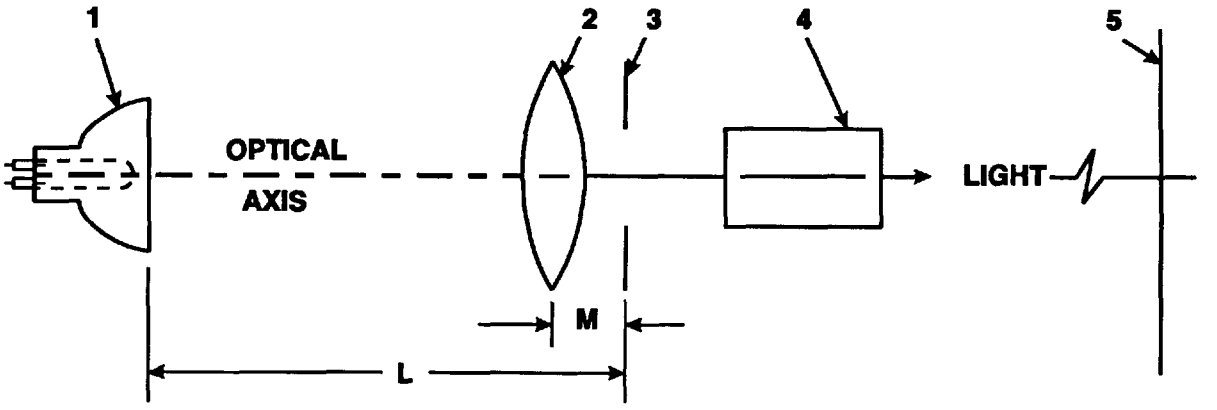

Layout A

Component	Description
1	EPV Lamp
2	Condenser Lens, Biconvex: Focal Length = 50 mm
3	Film Plane: Aperture Size 11.11 mm square
4	Projection Lens: Focal Length = 20 mm f/no = f/3.5
5	Projected Image Plane: Image Size = 266.7 mm (10.50") square
Reference	**Nominal dimension**
L	155 mm
M	15.88 mm

Copyright National Electrical Manufacturers Association
Provided by IHS under license with NEMA
No reproduction or networking permitted without license from IHS
Not for Resale

This page intentionally left blank.

Copyright National Electrical Manufacturers Association
Provided by IHS under license with NEMA
No reproduction or networking permitted without license from IHS
Not for Resale

Component layout and dimensions for EPX lamp projection system

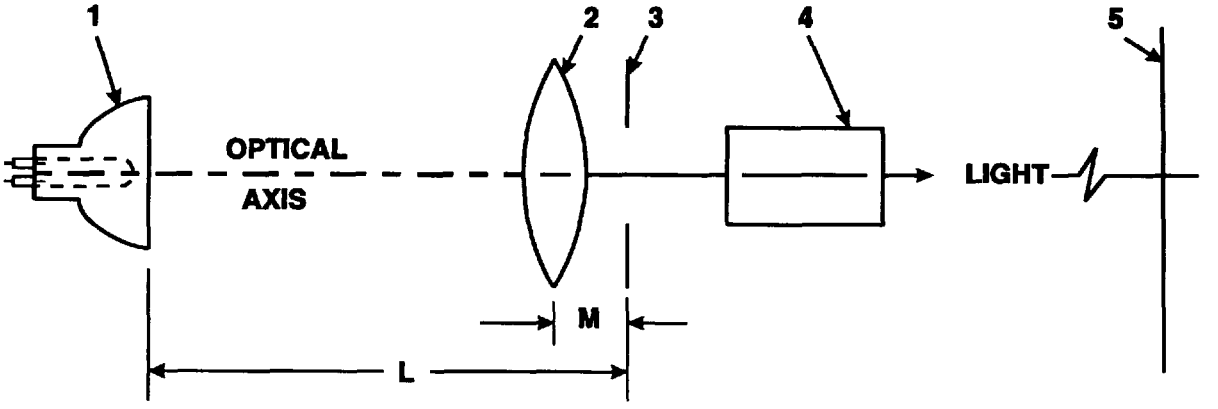

Layout A

Component	Description
1	EPX Lamp
2	Condenser Lens, Biconvex: Focal Length = 50 mm
3	Film Plane: Aperture Size 5.82 mm x 7.41 mm
4	Projection Lens: Focal Length = 17 mm f/no = f/2.8
5	Projected Image Plane: Image Size = 279.4 mm x 355.6 mm
Reference	**Nominal dimension**
L	165 mm
M	15.88 mm

Copyright National Electrical Manufacturers Association
Provided by IHS under license with NEMA
No reproduction or networking permitted without license from IHS
Not for Resale

This page intentionally left blank.

Copyright National Electrical Manufacturers Association
Provided by IHS under license with NEMA
No reproduction or networking permitted without license from IHS

Not for Resale

Component layout and dimensions for EPZ lamp projection system

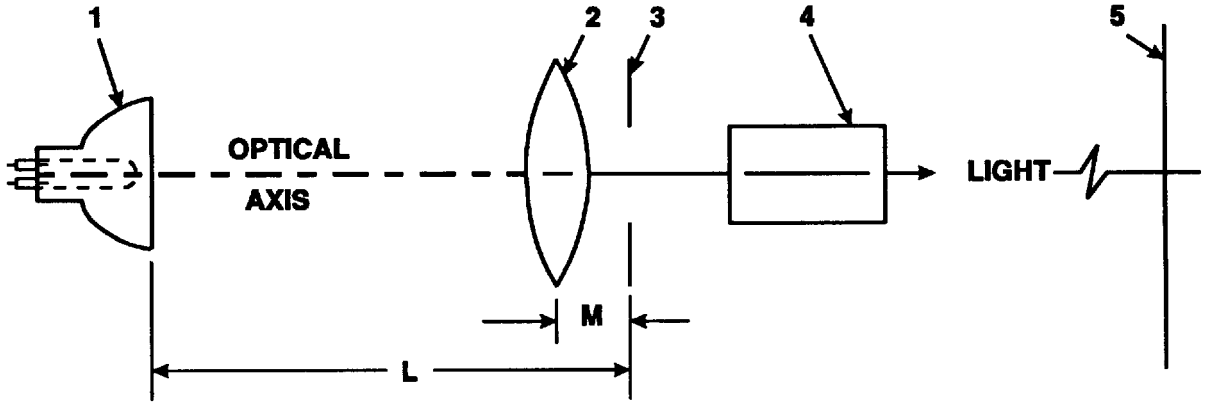

Layout A

Component	Description
1	EPZ Lamp
2	Condenser Lens, Biconvex: Focal Length = 50 mm
3	Film Plane: Aperture Size 13.30 mm x 16.93 mm
4	Projection Lens: Focal Length = 38 mm f/no = f/2.8
5	Projected Image Plane: Image Size = 279.4 mm x 355.6 mm
Reference	**Nominal Dimension**
L	108 mm
M	15.88 mm

Copyright National Electrical Manufacturers Association
Provided by IHS under license with NEMA
No reproduction or networking permitted without license from IHS
Not for Resale

This page intentionally left blank.

Copyright National Electrical Manufacturers Association
Provided by IHS under license with NEMA
No reproduction or networking permitted without license from IHS

Not for Resale

Component layout and dimensions for EYG lamp projection system

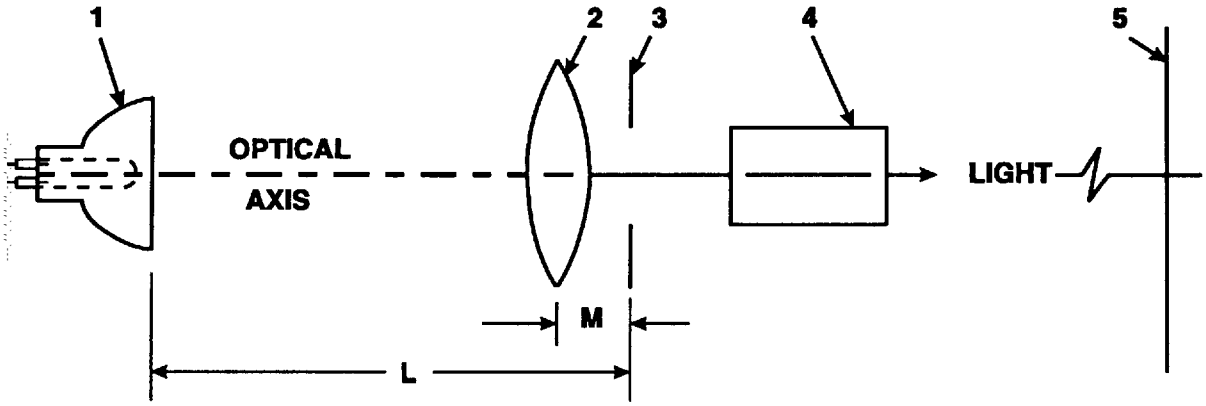

Layout A

Component	Description
1	EYG Lamp
2	Condenser Lens, Biconvex: Focal Length = 50 mm
3	Film Plane: Aperture Size 5.82 mm x 7.41 mm
4	Projection Lens: Focal Length = 17 mm f/no = f/2.8
5	Projected Image Plane: Image Size = 279.4 mm x 355.6 mm
Reference	**Nominal Dimension**
L	108 mm
M	15.88 mm

Copyright National Electrical Manufacturers Association
Provided by IHS under license with NEMA
No reproduction or networking permitted without license from IHS
Not for Resale

This page intentionally left blank.

--`,,,``,,-`-`,,`,,`,`,,`---

Copyright National Electrical Manufacturers Association
Provided by IHS under license with NEMA
No reproduction or networking permitted without license from IHS

Not for Resale

Component layout and dimensions for FHX lamp projection system

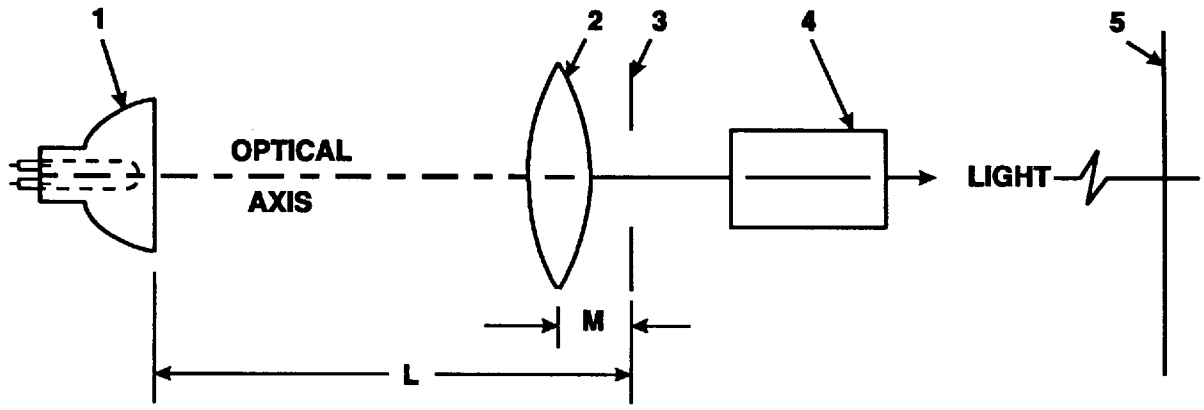

Layout A

Component	Description
1	FHX Lamp
2	Condenser Lens, Biconvex: Focal Length = 50 mm
3	Film Plane: Aperture Size 13.30 mm x 16.93 mm
4	Projection Lens: Focal Length = 38 mm f/no = f/2.8
5	Projected Image Plane: Image Size = 279.4 mm x 355.6 mm
Reference	**Nominal Dimension**
L	108 mm
M	15.88 mm

Copyright National Electrical Manufacturers Association
Provided by IHS under license with NEMA
No reproduction or networking permitted without license from IHS
Not for Resale

This page intentionally left blank.

Copyright National Electrical Manufacturers Association
Provided by IHS under license with NEMA
No reproduction or networking permitted without license from IHS
Not for Resale

Component layout and dimensions for DJT Lamp projection system

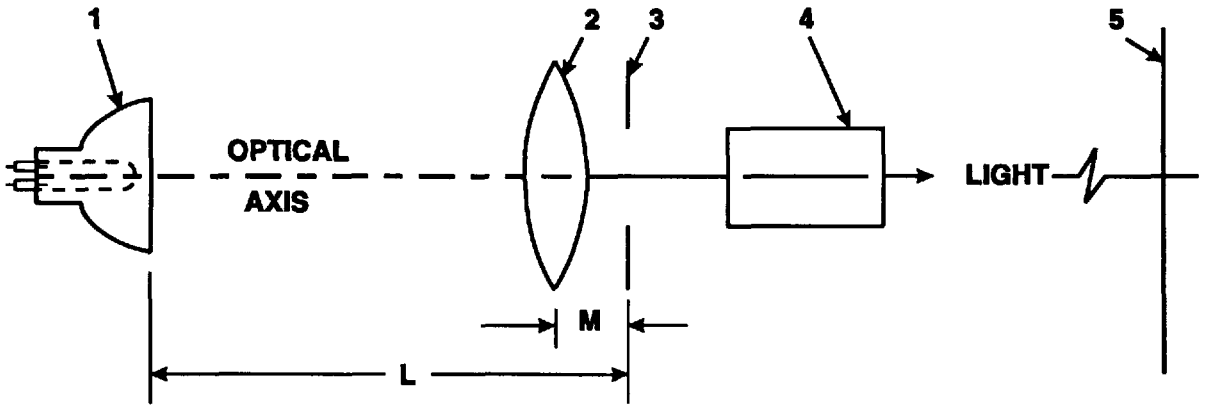

Layout A

Component	Description
1	DJT Lamp
2	Condenser Lens, Biconvex: Focal Length = 50 mm
3	Film Plane: Aperture Size 13.30 mm x 16.93 mm
4	Projection Lens: Focal Length = 38 mm f/no = f/2.8
5	Projected Image Plane: Image Size = 279.4 mm x 355.6 mm
Reference	**Nominal Dimension**
L	152 mm
M	15.88 mm

Copyright National Electrical Manufacturers Association
Provided by IHS under license with NEMA
No reproduction or networking permitted without license from IHS
Not for Resale

This page intentionally left blank.

Copyright National Electrical Manufacturers Association
Provided by IHS under license with NEMA
No reproduction or networking permitted without license from IHS
Not for Resale

Component layout and dimensions for FJX lamp projection system

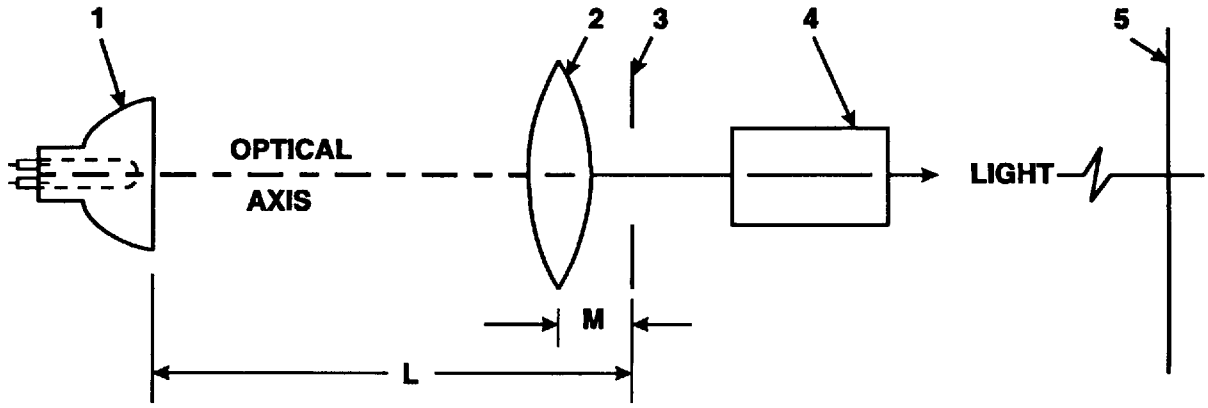

Layout A

Component	Description
1	FJX Lamp
2	Condenser Lens, Biconvex: Focal Length = 50 mm
3	Film Plane: Aperture Size 13.30 mm x 16.93 mm
4	Projection Lens: Focal Length = 38 mm f/no = f/2.8
5	Projected Image Plane: Image Size = 279.4 mm x 355.6 mm
Reference	**Nominal Dimension**
L	108 mm
M	15.88 mm

Copyright National Electrical Manufacturers Association
Provided by IHS under license with NEMA
No reproduction or networking permitted without license from IHS
Not for Resale