ANSI C78.1412-1991
Revision of ANSI C78.1412-1985

American National Standard

for electric lamps –

EMM projection lamp

Approved February 26, 1991 Secretariat: National Electrical Manufacturers Association

Lamp description

Designation code: EMM
Type: Condensing, dichroic, integral reflector, side-pin tungsten-halogen lamp
Base: GX7.9
Application: 16 mm Projector

Ratings

Wattage ..... 250 watts
Voltage ..... 24 volts
Life ..... 50 hours
Correlated color temperature ..... 3400 K
Working distance ..... 65.80 mm

Performance

Screen illumination ..... 900 lumens, nominal
Corner/center ratio ..... 60% nominal

NOTE – The nominal values shown were obtained with a system using the following elements:

Projection lens ..... f/1.2 × 50.8 mm
Aperture ..... 6.86 mm × 9.40 mm oriented with the long axis in the plane of the lamp base pins

An American National Standard implies a consensus of those substantially concerned with its scope and provisions. An American National Standard is intended as a guide to aid the manufacturer, the consumer, and the general public. The existence of an American National Standard does not in any respect preclude anyone, whether he has approved the standard or not, from manufacturing, marketing, purchasing, or using products, processes, or procedures not conforming to the standard. American National Standards are subject to periodic review and users are cautioned to obtain the latest editions.

The American National Standards Institute does not develop standards and will in no circumstances give an interpretation of any American National Standard. Moreover, no person shall have the right or authority to issue an interpretation of an American National Standard in the name of the American National Standards Institute.

CAUTION NOTICE: This American National Standard may be revised or withdrawn at any time. The procedures of the American National Standards Institute require that action be taken to reaffirm, revise, or withdraw this standard no later than five years from the date of approval. Purchasers of American National Standards may receive current information on all standards by calling or writing the American National Standards Institute.

ANSI C78.1412-1991

Copyright National Electrical Manufacturers Association
Provided by IHS under license with NEMA 1991 by ANSI American National Standards Institute, 11 West 42nd Street, New York, N.Y. 10036
No reproduction or networking permitted without license from IHS
Not for Resale

Restrictions

Operating position ..... Optical axis horizontal
Seal temperature ..... 400°C maximum
Bulb temperature ..... 250°C minimum

Shielding: To assure maximum safety during handling and use of the subject lamps, the following notices should be observed:

– Tungsten-halogen lamps operate at high temperature and at internal gas pressures above atmospheric pressure. Consequently, a lamp could shatter. Certain lamps may also emit some amount of ultraviolet radiation. Therefore a suitable protective shield, screening technique, or both shall be used with the luminaire to protect people and surroundings from both hazards;

– Information contained in the lamp manufacturer's caution notice shall always be read and observed.

Physical characteristics

Base specifications: GX7.9, see *American National Standard for Electrical Lamp Bases*, ANSI C81.61-1990. Dimensions for EMM projection lamp are shown in figure 1.

Test procedures

Life ..... Open rack, horizontal burning position with cooling to maintain temperature limits in accordance with *American National Standard for Electric Lamps - Incandescent Projection Lamps - Method for Life Testing*, ANSI C78.1450-1983 (R1989).

Illumination ..... See *American National Standard Illumination Tests for Photographic Still-Front-Projection Equipment*, ANSI PH3.705-1980 (R1985).[1)]

Seal temperature ..... Measurement procedure is defined in *Standard Method of Measuring the Pinch Temperature of Quartz-Tungsten-Halogen Lamps*, IEC Publication 682 (1980).

Operating temperature ..... Standard methods of measuring other lamp operating temperatures (bulb and base) are under consideration.

---

1) This standard has been administratively withdrawn. Contact the secretariat for more information.

Copyright National Electrical Manufacturers Association
Provided by IHS under license with NEMA
No reproduction or networking permitted without license from IHS
Not for Resale

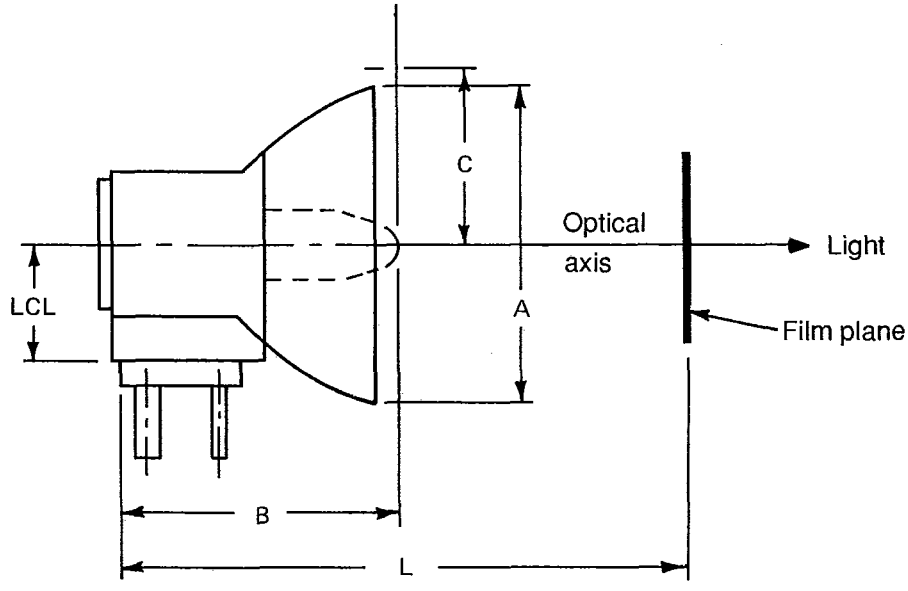

Reference	Standard dimensions (mm)		
	Min.	Nom.	Max.
A	–	–	44.45
B	–	–	42.70
C[1)]	–	–	22.90
LCL	–	15.88	–
L (Working distance)	–	65.80	–
MOL	–	–	47.40

[1)] Dimension C defines the maximum excursion of the mirror in any direction.

Figure 1 – Dimensions for EMM projection lamp

Copyright National Electrical Manufacturers Association
Provided by IHS under license with NEMA
No reproduction or networking permitted without license from IHS
Not for Resale