A-13-09

ANSI C78.1406-1983
Revision of ANSI C78.1406-1978

American National Standard

for electric lamps – single-contact medium prefocus base-down-type projection lamps – dimensions

Approved: August 19, 1983

Secretariat: National Electrical Manufacturers Association

1. Scope

1.1 This standard establishes the dimensions essential to interchangeability of single-contact medium prefocus base-down lamps of T-10 and T-12 bulb sizes.

1.2 It is not the intent to prescribe operating characteristics or details of design.

2. Lamp Designations

Incandescent projection lamps are usually identified by a three-letter code, as specified in American National Standard Method for the Designation of Photo Lamps, ANSI C78.370-1982.

3. Dimensions

3.1 The dimensions and characteristics of the lamp base shall comply with American National Standard Specifications for Electric Lamp Bases and Holders – Bayonet and Prefocus Types, ANSI C81.30-1976.

3.2 The dimensions shall be as specified in Figure 1 and its accompanying table.

3.3 The plane of the filament bisects the base flanges within ±5°.

3.4 The filament shall be centered on base axis within 0.030 in (0.76 mm) in both front and side views.

4. Operating Position

Lamps of this type are intended to be burned with the axis in an essentially vertical position with the base at the bottom.

ANSI C78.1406-1983

An American National Standard implies a consensus of those substantially concerned with its scope and provisions. An American National Standard is intended as a guide to aid the manufacturer, the consumer, and the general public. The existence of an American National Standard does not in any respect preclude anyone, whether he has approved the standard or not, from manufacturing, marketing, purchasing, or using products, processes, or procedures not conforming to the standard. American National Standards are subject to periodic review and users are cautioned to obtain the latest editions.

The American National Standards Institute does not develop standards and will in no circumstances give an interpretation of any American National Standard. Moreover, no person shall have the right or authority to issue an interpretation of an American National Standard in the name of the American National Standards Institute.

CAUTION NOTICE: This American National Standard may be revised or withdrawn at any time. The procedures of the American National Standards Institute require that action be taken to reaffirm, revise, or withdraw this standard no later than five years from the date of approval. Purchasers of American National Standards may receive current information on all standards by calling or writing the American National Standards Institute.

Copyright National Electrical Manufacturers Association
Provided by IHS under license with NEMA
No reproduction or networking permitted without license from IHS

Not for Resale

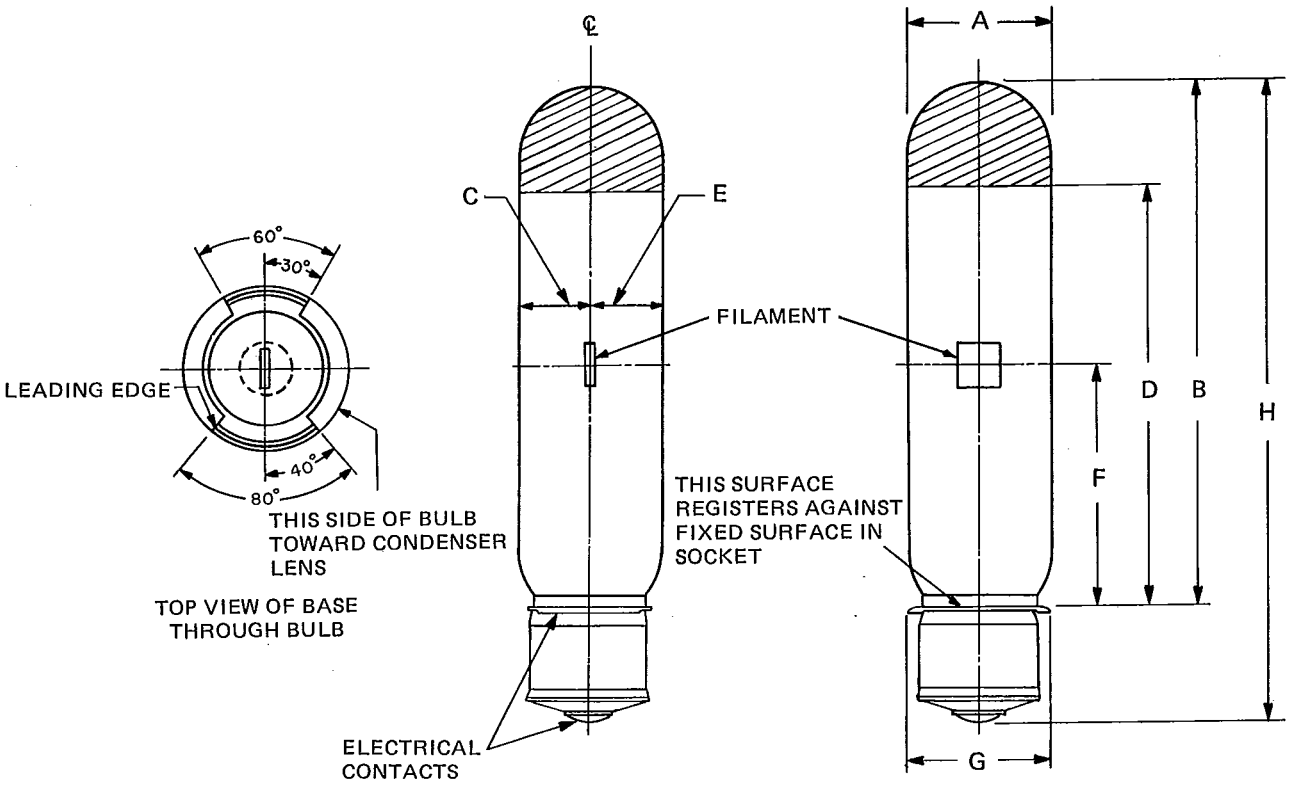

	Inches		Millimeters	
Dimensions*	T-10	T-12	T-10	T-12
A	1.294 max	1.546 max	32.87 max	39.27 max
B	4.797 max	4.797 max	121.84 max	121.84 max
C (Note 1)	0.725 max	0.850 max	18.42 max	21.59 max
D (Note 2)	3.485 min	3.485 min	88.52 min	88.52 min
E (Note 1)	0.668 max	0.785 max	16.97 max	19.94 max
F	2.187 ± 0.030	2.187 ± 0.030	55.55 ± 0.76	55.55 ± 0.76
G	1.323 nom	1.323 nom	33.60 nom	33.60 nom
H	5.750 max	5.750 max	146.05 max	146.05 max

*Angular dimensions are nominal.

NOTES:

(1) Dimensions C and E define the maximum excursion of the bulb surfaces from the base axis toward the condensing lenses (Dimension E) and the mirror (Dimension C). Therefore, the lamp chimney, the mirror, and the condensing lenses and their respective mounts must be so located as to ensure adequate clearance between these parts and the bulb surface.

(2) Dimension D applies to those projection lamps having opaque end coatings. However, there are exceptions, the specifications of which are supplied by the equipment manufacturer.

Figure 1
Dimensions for Single-Contact
Medium Prefocus Base-Down Type
Projection Lamps

Copyright National Electrical Manufacturers Association
Provided by IHS under license with NEMA
No reproduction or networking permitted without license from IHS
Not for Resale

Appendix

(This Appendix is not part of American National Standard C78.1406-1983, but is included for information only.)

A1. The location of the lamp in a holder is determined by the winged flanges on the base shell. The top surface of the flanges determines the vertical location, the diameter of the flanges determines the lateral location, and the leading edge of the large angular flange section determines the rotational alignment.

A2. The terms "T-10" and "T-12" define the general shape and nominal diameter of the bulb. The letter "T" is an abbreviation for tubular; the numbers relate to the nominal diameter in eighths of an inch; for example, T-10 is a tubular bulb 10/8 or 1-1/4 inches in diameter. See American National Standard Nomenclature for Glass Bulbs Intended for Use with Electric Lamps, ANSI C79.1-1980.

Copyright National Electrical Manufacturers Association
Provided by IHS under license with NEMA
No reproduction or networking permitted without license from IHS
Not for Resale