STD.NEMA C78.1384-ENGL 1997 ■ 6470247 0513628 075 ■

AMERICAN NATIONAL STANDARD

American National Standard

ANSI C78.1384-1997

AMERICAN NATIONAL STANDARD

FOR ELECTRIC LAMPS—

150-WATT, M102 SINGLE-ENDED METAL-HALIDE LAMPS

NATIONAL ELECTRICAL MANUFACTURERS ASSOCIATION
1300 NORTH 17TH STREET, SUITE 1847, ROSSLYN, VA 22209
(703) 841-3200 FAX: (703) 841-3300

Copyright National Electrical Manufacturers Association
Provided by IHS under license with NEMA
No reproduction or networking permitted without license from IHS
Not for Resale

STD.NEMA C78.1384-ENGL 1997 ■ 6470247 0513629 T01 ■

ANSI C78.1384-1997

American National Standard for electric lamps:

150-Watt, M102 Single-Ended Metal-Halide Lamps

Secretariat
National Electrical Manufacturers Association

Approved June 6, 1997
American National Standards Institute

Copyright National Electrical Manufacturers Association
Provided by IHS under license with NEMA
No reproduction or networking permitted without license from IHS

Not for Resale

American National Standard

Approval of an American National Standard requires verification by ANSI that the requirements for due process, consensus, and other criteria for approval have been met by the standards developer.

Consensus is established when, in the judgment of the ANSI Board of Standards Review, substantial agreement has been reached by directly and materially affected interests. Substantial agreement means much more than a simple majority, but not necessarily unanimity. Consensus requires that all views and objections be considered, and that a concerted effort be made toward their resolution.

The use of American National Standards is completely voluntary; their existence does not in any respect preclude anyone, whether he has approved the standards or not, from manufacturing, marketing, purchasing, or using products, processes, or procedures not conforming to the standards.

The American National Standards Institute does not develop standards and will in no circumstances give an interpretation of any American National Standard. Moreover, no person shall have the right or authority to issue an interpretation of an American National Standard in the name of the American National Standards Institute. Requests for interpretations should be addressed to the secretariat or sponsor whose name appears on the title page of this standard.

CAUTION NOTICE: This American National Standard may be revised or withdrawn at any time. The procedures of the American National Standards Institute require that action be taken periodically to reaffirm, revise, or withdraw this standard. Purchasers of American National Standards may receive current information on all standards by calling or writing the American National Standards Institute.

Published by

National Electrical Manufacturers Association
1300 North 17th Street, Suite 1847, Rosslyn, VA 22209

Copyright © 1997 by National Electrical Manufacturers Association
All rights reserved.

No part of this publication may be reproduced in any form, in an electronic retrieval system or otherwise, without prior written permission of the publisher.

Printed in the United States of America

Copyright © 1997 by National Electrical Manufacturers Association
1300 North 17th Street, Suite 1847, Rosslyn, VA 22209

First Edition
September 1997

Copyright National Electrical Manufacturers Association
Provided by IHS under license with NEMA
No reproduction or networking permitted without license from IHS

Not for Resale

Foreword (This Foreword is not part of ANSI C78.1384-1997.)

Suggestions for improvement of this standard should be submitted to the C78 Secretariat, National Electrical Manufacturers Association, 1300 North 17th Street, Suite 1847, Rosslyn, VA 22209.

This American National Standard has been approved by the American Standards Committee, C78, and its SubCommittee C78-4 for High-Intensity Discharge Lamps, which covers Metal Halide Lamps. At the time it approved revision of this standard, the C78 Committee had the following members:

Al Rousseau, Chair, C78
Rolf S. Bergman, Technical Coordinator
Randolph N. Roy, Secretariat
Jeanne L. Spicer, Coordinating Editor

Organization Represented:	*Name of Representative:*
Advance Transformer Company	Norman Grimshaw
Duro-Test Corporation	Herbert Strauss
Edison Electric Institute	William Maguire (Delegate)
Electrical Testing Laboratories	Craig Davenport
General Electric	John Krissinger
Illuminating Engineering Society	Rita M. Harrold
OSRAM SYLVANIA INC.	Peter Bleasby
Philips Lighting Company	Al Rousseau
Underwriters Laboratories, Inc.	David Belt

At the time of approval of this revised standard, SubCommittee C78-4 had the following members:

Mike Tanner, Chair, C78-4
Glenn Garbowicz, Vice Chair

Organization Represented:	*Name of Representative:*
Advance Transformer Company	Norman Grimshaw
	Glenn Garbowicz (Alt)
American Electric	Greg Steinman
City of Los Angeles	Michael M. Cates
Cooper Industries	Tom Burnet
Deltona Lighting Products, Inc.	Don Briner
Duro-Test Corporation	Larry Sheinberg
Edison Electric Institute	William Maguire (Delegate)
Electrical Testing Laboratories	Michael Neary
General Electric Lighting	David Korow
	John Krissinger (Alt)
General Electric Company	Byron Collins
	Michael Owens (Alt)
Holophane Company	Mike L. Tanner
	William Hitchcock (Alt)
Hubbell Lighting, Inc.	Isaac L. Flory, IV
Indy Lighting, Inc.	Ted Yahraus
Lithonia/Hi-Tek Lighting	Fred Carpenter
MagneTek	Bob Boydston
Manufacturera de Reactores, S.A.	Ernesto Mendoza

Copyright © 1997 by National Electrical Manufacturers Association
1300 North 17th Street, Suite 1847, Rosslyn, VA 22209

Copyright National Electrical Manufacturers Association
Provided by IHS under license with NEMA
No reproduction or networking permitted without license from IHS
Not for Resale

OSRAM SYLVANIA INC.	Richard Parrott
	Warren Anderson (Alt)
Philips Lighting Company	Sam Carleton
	Bill Simpson (Alt)
Underwriters Laboratories, Inc.	David Belt
	John Marshall (Alt)
Venture Lighting International	Tom Harding
	Juris Sulcs (Alt)

Copyright © 1997 by National Electrical Manufacturers Association
1300 North 17th Street, Suite 1847, Rosslyn, VA 22209

First Edition
September 1997

Copyright National Electrical Manufacturers Association
Provided by IHS under license with NEMA
No reproduction or networking permitted without license from IHS

Not for Resale

Contents

Foreword iii

1 Lamp designation and description 1
2 Normative references 1
3 Physical characteristics 1
4 Maximum outline drawings 3
5 Electrical characteristics 4
6 Lamp starting voltage and warm-up requirements 4
7 Reference ballast characteristics 5
8 Data for ballast design 5
9 Information for luminaire design 8

Annex A A-3

Copyright © 1997 by National Electrical Manufacturers Association
1300 North 17th Street, Suite 1847, Rosslyn, VA 22209

First Edition
September 1997

Copyright National Electrical Manufacturers Association
Provided by IHS under license with NEMA
No reproduction or networking permitted without license from IHS

Not for Resale

THIS PAGE INTENTIONALLY LEFT BLANK

Copyright © 1997 by National Electrical Manufacturers Association
1300 North 17th Street, Suite 1847, Rosslyn, VA 22209

First Edition
September 1997

Copyright National Electrical Manufacturers Association
Provided by IHS under license with NEMA
No reproduction or networking permitted without license from IHS

Not for Resale

American National Standard **ANSI C78.1384-1997**

for electric lamps

150-Watt, M102 Single-Ended Metal-Halide Lamps

1 Lamp designation and description

Metal-halide lamp designations are assigned in accordance with ANSI C78.380.

Designation	Bulb	Base
M102TW-150	BD17 (BD54) or ED17 (ED54), clear	Medium E26
M102TX-150	BD17 (BD54) or ED17 (ED54), diffuse	Medium E26

2 Normative references

The following standards contain provisions which, through reference in this text, constitute provisions of this American National Standard. At the time of publication, the editions indicated were valid. All standards are subject to revision, and parties to agreements based on this American National Standard are encouraged to investigate the possibility of applying the most recent editions of the standards indicated below.

ANSI C78.380-1984 (R1993), *Electric Lamps—High-Intensity-Discharge Lamps—Method of Designation*

ANSI C78.387-1995, *Electric Lamps—Metal-Halide Lamps—Methods of Measuring Characteristics*

ANSI C79.1-1994, *Nomenclature for Glass Bulbs Intended for Use with Electric Lamps*

ANSI C81.61-1990 (R1996), *Electric Lamp Bases*

ANSI C81.63-1991 (R1996), *Electric Lamp Base and Lampholder Gauges*

ANSI C82.4-1992, *Ballasts for High-Intensity-Discharge and Low Pressure Sodium Lamps (Multiple Supply Type)*

ANSI C82.5-1990 (R1995), *Reference Ballasts for High-Intensity-Discharge Lamps*

ANSI C82.6-1985 (R1995) and ANSI C82.6a-1988 (R1995), *Ballasts for High-Intensity-Discharge Lamps—Methods of Measurement*

ANSI C82.9-1996, *Definitions for High-Intensity-Discharge and Low Pressure Sodium Lamps, Ballasts, and Transformers*

ANSI/UL 1572-1995, *Standard for Safety, High-Intensity-Discharge Lighting Fixtures*

3 Physical characteristics

3.1 Bulb designations

Bulb designations are defined in ANSI C79.1. Due to the long term use of the conventional method of bulb designations, their use will continue herein with the equivalent metric bulb designations shown in parentheses (i.e. BT28 [BT90]) in contrast with the use of metric primary dimensions elsewhere in this standard.

Copyright © 1997 by National Electrical Manufacturers Association
1300 North 17th Street, Suite 1847, Rosslyn, VA 22209

Copyright National Electrical Manufacturers Association
Provided by IHS under license with NEMA
No reproduction or networking permitted without license from IHS
Not for Resale

3.2 Base specifications

Screw-shell-type bases are specified in ANSI C81.61. Compliance shall be checked by the relevant gauges in ANSI C81.63.

3.3 General characteristics

With BD17 (BD54) or ED17 (ED54) bulb:

Nominal diameter	54 mm (2.13 in)
Maximum overall length (MOL)	138 mm (5.43 in)
Light center length (LCL)	86 mm ± 3 mm (3.39 in ± 0.12 in)
Effective Arc Length	13.5 mm ± 6 mm (0.53 in ± 0.24 in)
Maximum electrode tip deviation from base axis (apex at base eyelet)	3 degrees
Operating position limitation	As indicated by the lamp marking
Maximum permissible bulb temperature	400°C (752°F)
Maximum permissible base temperature	190°C (374°F)

Copyright © 1997 by National Electrical Manufacturers Association
1300 North 17th Street, Suite 1847, Rosslyn, VA 22209
First Edition
September 1997

Copyright National Electrical Manufacturers Association
Provided by IHS under license with NEMA
No reproduction or networking permitted without license from IHS
Not for Resale

4 Maximum outline drawings

Figure 1 defines the maximum outline dimensional limits, including eccentricity, of the lamp. The figure does not define the actual bulb configuration. All dimensions are in millimeters.

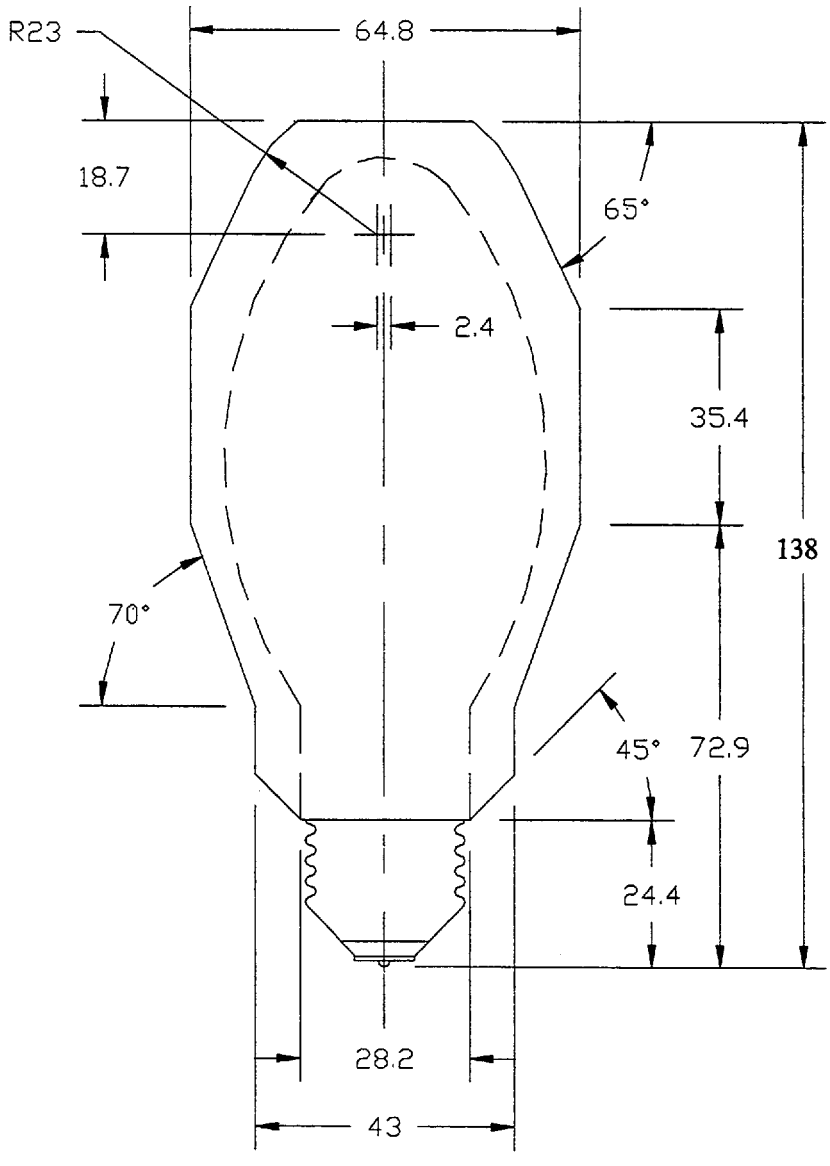

Figure 1–Maximum outline drawing

Bulb:	BD17 (BD54), ED17 (ED54)
Base:	Medium Screw (E26)
MOL:	138 mm
Eccentricity:	3°

Copyright © 1997 by National Electrical Manufacturers Association
1300 North 17th Street, Suite 1847, Rosslyn, VA 22209

Copyright National Electrical Manufacturers Association
Provided by IHS under license with NEMA
No reproduction or networking permitted without license from IHS

Not for Resale

5 Electrical characteristics

See ANSI C78.387 for measurement procedures.

Lamps shall be measured in the vertical, base-up, position unless otherwise designated by the lamp manufacturer.

5.1 Lamp operating characteristics at 100 hours operation

Vertical, Base Up*	Min	Nom	Max
Voltage at lamp terminals (volts, rms)	85	95	105
Lamp current (amperes, rms)	–	1.8	–
Lamp wattage (watts)	–	150	–

*Unless otherwise designated by the lamp manufacturer.

The preceding lamp operating characteristics are based on operation in an ambient temperature of 25°C ± 5°C (77°F ± 9°F) on a reference ballast as shown in Section 7.

5.2 Lamp reignition voltage spike

The reignition voltage spike during warm-up for any lamp shall not exceed 150 volts peak throughout life when operated on a linear reactor ballast having the following characteristics:

Supply voltage..... 300 volts
Ballast short circuit current..... 2.5 amperes
Impedance ..... 120 ohms
Power factor..... 0.075 ± 0.005
Linearity ..... requirements identical to reference ballasts (See ANSI C82.5)

5.3 Lamp reignition voltage (Vr)

Maximum value through life as measured on a reference ballast in section 7:
TBD volts, peak

6 Lamp starting voltage and warm-up requirements

See ANSI C78.387 for measurement procedures.

Lamps shall be measured in the vertical, base-up, position unless otherwise designated by the lamp manufacturer.

6.1 Lamp starting voltage requirements as a function of time and temperature.

6.1.1 Lamp starting voltage requirements for lamps not requiring auxiliary starting circuits

(Reserved for future consideration)

6.1.2 Lamp starting voltage requirements for lamps requiring auxiliary starting circuits

Lamps shall start within the time specified at the ambient temperature indicated under the following test conditions:

Copyright © 1997 by National Electrical Manufacturers Association
1300 North 17th Street, Suite 1847, Rosslyn, VA 22209
First Edition
September 1997

Copyright National Electrical Manufacturers Association
Provided by IHS under license with NEMA
No reproduction or networking permitted without license from IHS
Not for Resale

1. A ballast as specified in Section 7, except using a 235-volt sine-wave power supply of 60 Hz.
2. A starting pulse with open circuit characteristics at the minimum pulse characteristics of 8.3. The characteristics are measured at the terminal of the lampholder. The pulse is applied to the center terminal of the lamp base with the shell grounded.

Temperature	Time
10°C ± 1°C (50°F ± 2°F)	10 Sec.
-30°C ± 1°C (-22°F ± 2°F)	120 Sec.

6.2 Lamp warm-up requirement

A bare lamp operating in still air at an ambient temperature of 25°C ± 5°C (77°F ± 9°F) and at the minimum specified starting current shall reach 95% of the specified minimum lamp operating voltage in not more than 2 minutes.

7 Reference ballast characteristics

See ANSI C82.5 for the general specifications for reference ballasts.

Supply voltage	220 volts*
Reference current	1.8 amperes
Impedance	97 ohms
Power factor	0.075 ± 0.005
Frequency	60 Hz

* A momentary higher open-circuit voltage may be necessary to start the lamp where an auxiliary starting circuit is not provided.

8 Data for ballast design

The ballast requirements shall be met throughout the full range of ballast rated supply voltages. They apply to ballasts integral to the luminaire as well as remotely connected ballasts and HID starters (that is, ignitors). Capacitive loading across the lampholder terminals may be necessary to simulate characteristics of a remotely connected ballast.

For additional limits on ballast performance, see ANSI C82.4.

8.1 Requirements for lag ballasts

8.1.1 Lag ballasts without auxiliary starting circuits

(Reserved for future consideration)

8.1.2 Lag ballasts with auxiliary starting circuits

Ballasts shall meet the following minimum open circuit voltage specifications in order to reliably start lamps and sustain the arc discharge at an ambient temperature of -30°C (-22°F) or above:

	For Starting		For Operation	
Open-circuit voltage	V_{rms}	V_{peak}	V_{rms}	V_{peak}
Minimum voltage, 60 Hz	235	332	235	332

See 8.3 for starting pulse requirements.

Copyright © 1997 by National Electrical Manufacturers Association
1300 North 17th Street, Suite 1847, Rosslyn, VA 22209

First Edition
September 1997

Copyright National Electrical Manufacturers Association
Provided by IHS under license with NEMA
No reproduction or networking permitted without license from IHS
Not for Resale

8.2 Requirements for peak lead ballast

8.2.1 Voltages for reliable starting

(Reserved for future consideration)

8.2.2 Current waveshape characteristics

(Reserved for future consideration)

8.2.3 Minimum sustaining voltage (Vss)

(Reserved for future consideration)

8.2.4 Peak lead ballasts with auxiliary starting circuits

(Reserved for future consideration)

8.3 Starter requirements

The starting pulse (defined in C82.9) shall be applied to the center terminal of the lamp base with the wiring between ballast and lampholder (or its equivalent capacitance) connected. See the manufacturer's literature for the appropriate value of equivalent capacitance. The pulse, measured at the lampholder terminals across a dummy lamp load of 20pF, shall have the following characteristics:

a) Min pulse height, kV 3
b) Max pulse height, kV 4
c) Min pulse width, µs @ kV ..... 1 @ 2.7
d) Min pulse repetition rate per 1/2 cycle 2
e) Pulse position(s) for lag circuit ballasts ..... -26° to + 20° of peak
f) Pulse position(s) for lead circuit ballasts ..... NA
g) Minimum starter current, amps, peak..... TBD
h) Starter cut-off voltage ..... NA
j) Instantaneous open circuit recovery voltage, minimum ..... NA

8.4 Starting current requirements

Amperes, rms	Lag Ballasts
Minimum	1.8
Maximum	3.0

Starting current is measured 5 to 15 seconds after the lamp has started.

To protect lamps during initial warm-up, maximum peak rectification current for lag ballasts shall be TBD amperes, peak. The peak value shall be measured with a suitable rectifying load substituted for the lamp. Refer to lamp manufacturer for details.

8.5 Current crest factor

The lamp current crest factor, at any rated supply voltage, during warm-up and operation of a reference lamp shall not exceed 1.8.

Copyright © 1997 by National Electrical Manufacturers Association
1300 North 17th Street, Suite 1847, Rosslyn, VA 22209

Copyright National Electrical Manufacturers Association
Provided by IHS under license with NEMA
No reproduction or networking permitted without license from IHS
Not for Resale

8.6 Maximum voltage across lamp terminals

8.6.1 Non-pulse-start circuits

(Reserved for future consideration)

8.6.2 Pulse-start circuits

Voltage at any time shall not exceed 4000 volts, peak.

8.7 Lamp operating wattage

The operating wattage of a bare lamp is measured in its designated operating position on a ballast throughout its range of rated supply voltages in a still air ambient of 25°C ± 5°C (77°F ± 9°F). The following wattage limits apply:

	Minimum (watts)	Maximum (watts)
Wattage limits, 100-hour lamps	120	180 *
Wattage limits through life (At all rated input voltages)	TBD	TBD *

Lamps shall operate within these limits throughout the full range of lamp voltage tolerance. When measured on a reference ballast, the range of lamp voltage through life is 85 to TBD.

To meet these limits, a ballast at 100% rated input voltage shall operate a reference lamp within ± 5% of the wattage delivered to the same lamp in the same position by a reference ballast. Also the ballast, throughout the input voltage range for which it was intended, shall operate a reference lamp within ± 15% of the wattage delivered to that reference lamp by a reference ballast at its rated voltage.

The wattage design center of a ballast intended for this lamp shall be 150 watts.

***CAUTION:** Specific wattage limits are based on normal tolerance distributions of lamp voltage, ballast adjustment, and line voltage. If these tolerances are extreme and in the same direction, the specified wattage limits could be exceeded.

For additional limits of ballast performance, see ANSI C82.4.

8.8 Minimum lamp operating wattage

Operation of metal halide lamps below the wattage limits of this standard will lower lamp efficacy and may result in color shift, arc instability, flicker and reduced lamp life. The lamp manufacturer shall be consulted before operating metal halide lamps at reduced wattage or with dimming circuits.

9 Information for luminaire design

CAUTION: To insure correct thermal operation, UV protection and non-passive failure protection, the luminaire shall be designed in accordance with lamp manufacturers' recommendations for use and application.

Also see ANSI/UL 1572 for requirements on the construction of luminaires.

Copyright © 1997 by National Electrical Manufacturers Association
1300 North 17th Street, Suite 1847, Rosslyn, VA 22209

Copyright National Electrical Manufacturers Association
Provided by IHS under license with NEMA
No reproduction or networking permitted without license from IHS
Not for Resale

9.1 Voltage rise, luminaire effect limit

The lamp voltage of reference lamps, operating on a sinusoidal power supply of 60 Hz with the specified reference ballast at its rated input voltage, shall not change more than TBD volts when going from stabilized operation in open air to stabilized operation in a luminaire.

9.2 Lamp failure mechanism

Metal-halide lamps are constructed of a glass bulb with an internal arc tube made of quartz. These arc tubes operate under high pressure (typically 5 atmospheres) and temperature (typically 900°C). The arc tube may unexpectedly rupture due to internal causes or external factors. When this occurs, the glass bulb surrounding the arc tube may break and particles of extremely hot quartz from the arc tube and glass fragments from the glass bulb may be discharged into the fixture enclosure and possibly the surrounding environment, thereby creating a risk of personal injury or other hazard.

Copyright © 1997 by National Electrical Manufacturers Association
1300 North 17th Street, Suite 1847, Rosslyn, VA 22209
First Edition
September 1997

Copyright National Electrical Manufacturers Association
Provided by IHS under license with NEMA
No reproduction or networking permitted without license from IHS
Not for Resale

ANNEXES

Copyright © 1997 by National Electrical Manufacturers Association
1300 North 17th Street, Suite 1847, Rosslyn, VA 22209

Copyright National Electrical Manufacturers Association
Provided by IHS under license with NEMA
No reproduction or networking permitted without license from IHS

Not for Resale

THIS PAGE INTENTIONALLY LEFT BLANK

Copyright © 1997 by National Electrical Manufacturers Association
1300 North 17th Street, Suite 1847, Rosslyn, VA 22209

First Edition
September 1997

Copyright National Electrical Manufacturers Association
Provided by IHS under license with NEMA
No reproduction or networking permitted without license from IHS

Not for Resale

ANNEX A
(Informative)

A.1 Related standards

This standards are listed for information only.

ANSI C78.30-1996, *Procedure for Use in Preparation of Incandescent Lamp Space Drawings*[1]

ANSI C81.62-1991 (R1996), *Lampholders for Electric Lamps*

[1] Available from National Electrical Manufacturers Association, 1300 North 17th Street, Suite 1847, Rosslyn, VA 22209.

Copyright © 1997 by National Electrical Manufacturers Association
1300 North 17th Street, Suite 1847, Rosslyn, VA 22209

First Edition
September 1997

Copyright National Electrical Manufacturers Association
Provided by IHS under license with NEMA
No reproduction or networking permitted without license from IHS
Not for Resale

THIS PAGE INTENTIONALLY LEFT BLANK

Copyright © 1997 by National Electrical Manufacturers Association
1300 North 17th Street, Suite 1847, Rosslyn, VA 22209

First Edition
September 1997

Copyright National Electrical Manufacturers Association
Provided by IHS under license with NEMA
No reproduction or networking permitted without license from IHS

Not for Resale