# American National Standard

## for electric lamps –

# 250-watt, 120-volt self-ballasted mercury lamps – specifications

Approved May 19, 1988

Secretariat: National Electrical Manufacturers Association



Bulb: ED28 (ED89), PS30 (PS95), PS35 (PS111), R40 (R127)

Base: Medium Screw (E26) or Mogul Screw (E39)

## 1. Lamp Designation

| | |
|---|---|
| B94HM-250 | ED28 phosphor coated – E26 base |
| B94HP-250 | ED28 phosphor coated – E39 base |
| B94HD-250 | PS30 phosphor coated – E26 base |
| B94HE-250 | PS35 phosphor coated – E26 base |
| B94HG-250 | PS35 phosphor coated – E39 base |
| B94HY-250 | RD40 inside reflector frosted face (VWFL) – E26 base |
| B94HZ-250 | RD40 inside reflector frosted face (VWFL) – E39 base |
| B94HN-250 | R40 inside reflector frosted face (VWFL) – E26 base |
| B94HK-250 | R40 phosphor coated on inside reflector, clear face (VWFL) – E26 base |



## 2. Referenced American National Standards

This standard is intended for use in conjunction with the following American National Standards. When these standards are superseded by a revision approved by the American National Standards Institute, Inc, the revision shall apply.

ANSI C78.379-1983, Electric Lamps – Incandescent and High-Intensity Discharge Reflector Lamps – Classification of Beam Patterns

An American National Standard implies a consensus of those substantially concerned with its scope and provisions. An American National Standard is intended as a guide to aid the manufacturer, the consumer, and the general public. The existence of an American National Standard does not in any respect preclude anyone, whether he has approved the standard or not, from manufacturing, marketing, purchasing, or using products, processes, or procedures not conforming to the standard. American National Standards are subject to periodic review and users are cautioned to obtain the latest editions.

The American National Standards Institute does not develop standards and will in no circumstances give an interpretation of any American National Standard. Moreover, no person shall have the right or authority to issue an interpretation of an American National Standard in the name of the American National Standards Institute.

**CAUTION NOTICE:** This American National Standard may be revised or withdrawn at any time. The procedures of the American National Standards Institute require that action be taken to reaffirm, revise, or withdraw this standard no later than five years from the date of approval. Purchasers of American National Standards may receive current information on all standards by calling or writing the American National Standards Institute.

Copyright © 1988 by American National Standards Institute, 1430 Broadway, New York, N.Y. 10018



Copyright National Electrical Manufacturers Association
Provided by IHS under license with NEMA
No reproduction or networking permitted without license from IHS
Not for Resale

ANSI C78.380-1984, Electric Lamps – High-Intensity Discharge Lamps – Method of Designation

ANSI C79.1-1980 (R1984), Nomenclature for Glass Bulbs Intended for Use with Electric Lamps

ANSI C81.10-1976 (R1982), C81.10a-1979 (R1982), C81.10b-1983, Specifications for Electric Lamp Bases and Holders – Screw-Shell Types

## 3. Physical Characteristics

| | |
|---|---|
| With ED28 bulb and medium screw base (E26) | |
| Nominal diameter | 89 mm (3.50 in) |
| Maximum overall length | 216 mm (8.50 in) |
| Arc tube light center length | 139 mm ± 8 mm (5.47 in ± 0.3 in) |
| With ED 28 bulb and mogul screw base (E39) | |
| Nominal diameter | 89 mm (3.50 in) |
| Maximum overall length | 211 mm (8.312 in) |
| Arc tube light center length | 136 mm ± 12 mm (5.35 in ± 0.5 in) |
| With PS30 bulb and medium screw base (E26) | |
| Nominal diameter | 95 mm (3.75 in) |
| Maximum overall length | 205 mm (8.10 in) |
| Arc tube light center length | 151 mm ± 8 mm (5.94 in ± 0.3 in) |
| With PS35 bulb and medium screw base (E26) | |
| Nominal diameter | 111 mm (4.375 in) |
| Maximum overall length | 227 mm (8.94 in) |
| Arc tube light center length | 167 mm ± 4 mm (6.57 in ± 0.16 in) |
| With PS35 bulb and mogul screw base (E39) | |
| Nominal diameter | 111 mm (4.375 in) |
| Maximum overall length | 239 mm (9.41 in) |
| Arc tube light center length | 167 mm ± 4 mm (6.57 in ± 0.16 in) |
| With RD40 bulb and medium screw base (E26) | |
| Nominal diameter | 127 mm (5.00 in) |
| Overall length | 175 mm ± 3 mm (6.89 in ± 0.125 in) |
| Arc tube light center length | 99 mm ± 3 mm (3.90 in ± 0.125 in) |
| With RD40 bulb and mogul screw base (E39) | |
| Nominal diameter | 127 mm (5.00 in) |
| Overall length | 185 mm ± 3 mm (7.28 in ± 0.125 in) |
| Arc tube light center length | 110 mm ± 3 mm (4.33 in ± 0.125 in) |
| With R40 bulb and medium screw base (E26) | |
| Nominal diameter | 127 mm (5.00 in) |
| Overall length | 175 mm ± 3 mm (6.89 in ± 0.125 in) |
| Arc tube light center length | 110 mm ± 4 mm (4.33 in ± 0.16 in) |
| For all bulb sizes listed above | |
| Arc length | 22 mm ± 4 mm (0.87 in ± 0.16 in) |
| Maximum electrode tip deviation from base axis (apex at base eyelet) | 3 degrees |
| Incandescent filament location | Surrounding the arc tube |
| Burning position limitation | As indicated by the lamp marking |
| Maximum permissible bulb temperature | 350°C (662°F) |
| Maximum permissible base temperature E39 base | 210°C (410°F) |
| Maximum permissible base temperature E26 base | 190°C (374°F) |



Copyright National Electrical Manufacturers Association
Provided by IHS under license with NEMA
No reproduction or networking permitted without license from IHS
Not for Resale

## 4. Maximum Outline Drawings

Figures 1-8 define the maximum limits, including eccentricity, of the lamp. They do not necessarily define actual bulb configuration. All dimensions are in millimeters.

## 5. Electrical Characteristics

### 5.1 Lamp Operating Characteristics at 100 Hours Burning

Nominal line voltage (volts, rms) . . . . . 120
Allowed line voltage range (volts, rms). . . . . 115-125

| | Vertical | Horizontal |
|---|---|---|
| Watts – minimum at 115 volts. . . . . | 215 | 212 |
| Watts – nominal at 120 volts. . . . . | 250 | 248 |
| Watts – maximum at 125 volts . . . . . | 300 | 285 |
| Amperes, rms minimum at 115 volts. . . . . | 2.05 | 2.00 |
| Amperes, rms nominal at 120 volts . . . . . | 2.22 | 2.20 |
| Amperes, rms maximum at 125 volts. . . . . | 2.47 | 2.40 |
| Extinction voltage, rms, maximum . . . . . | 105 | 107 |

The above lamp operating characteristics are based on operation in an ambient temperature of 25°C (77°F) and a 60-Hz sinusoidal power supply.

### 5.2 Lamp Starting Temperature Limitation

Lamps shall start within an ambient temperature range of -18°C (0°F) to 50°C (122°F).

### 5.3 Lamp Starting Current at 0 Hours

Lamp starting current shall not exceed 3.05 amperes when measured at the maximum allowable line voltage of 125 volts. Maximum lamp starting current occurs within approximately 30 seconds after lamp is energized.

### 5.4 Warm-Up Time

When energized at the minimum allowable line voltage of 115 volts and operated in still air at an ambient temperature of 0°C (32°F), the bare lamp shall operate at a power not in excess of 110% of rated wattage after a period of time not exceeding 2.5 minutes.



Copyright National Electrical Manufacturers Association
Provided by IHS under license with NEMA
No reproduction or networking permitted without license from IHS
Not for Resale

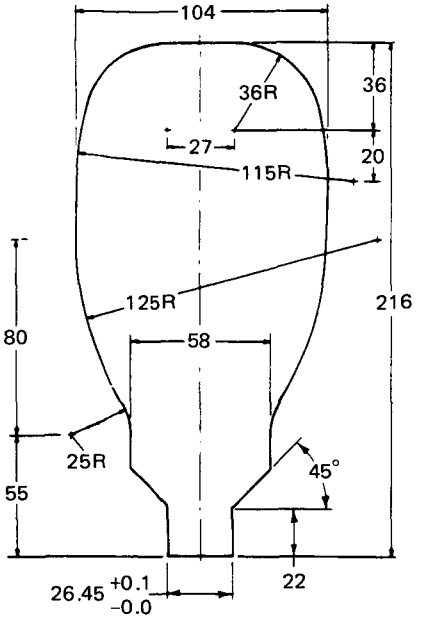


**Figure 1**
**Bulb: ED28**
**Base: Medium Screw (E26)**

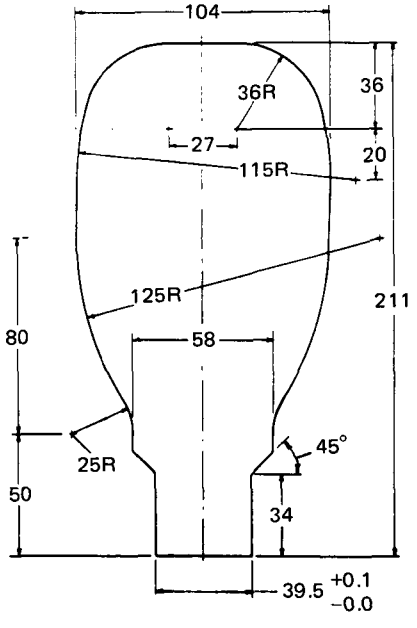


**Figure 2**
**Bulb: ED28**
**Base: Mogul Screw (E39)**

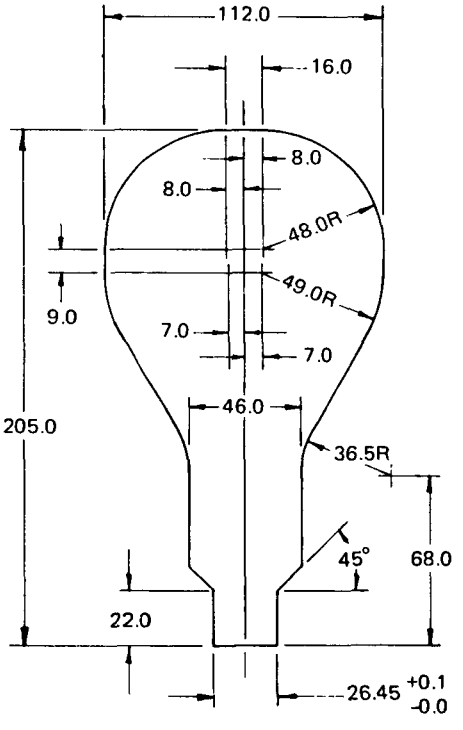


**Figure 3**
**Bulb: PS30**
**Base: Medium Screw (E26)**



Copyright National Electrical Manufacturers Association
Provided by IHS under license with NEMA
No reproduction or networking permitted without license from IHS
Not for Resale

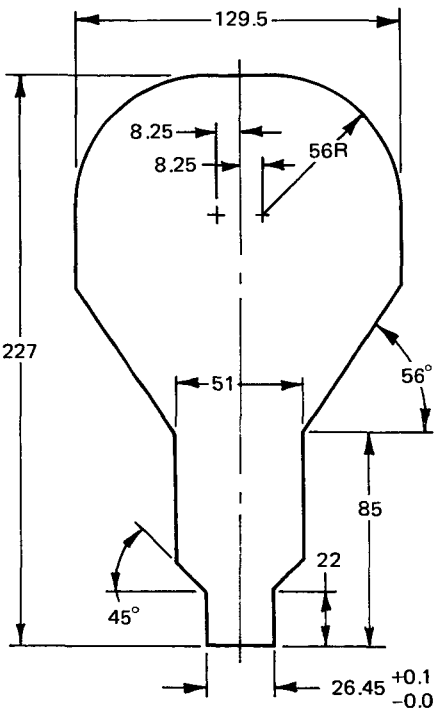


**Figure 4**
**Bulb: PS35**
**Base: Medium Screw (E26)**

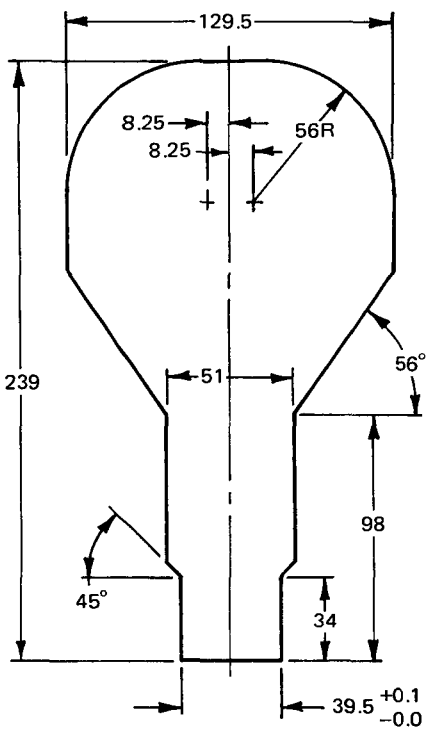


**Figure 5**
**Bulb: PS35**
**Base: Mogul Screw (E39)**



Copyright National Electrical Manufacturers Association
Provided by IHS under license with NEMA
No reproduction or networking permitted without license from IHS
Not for Resale

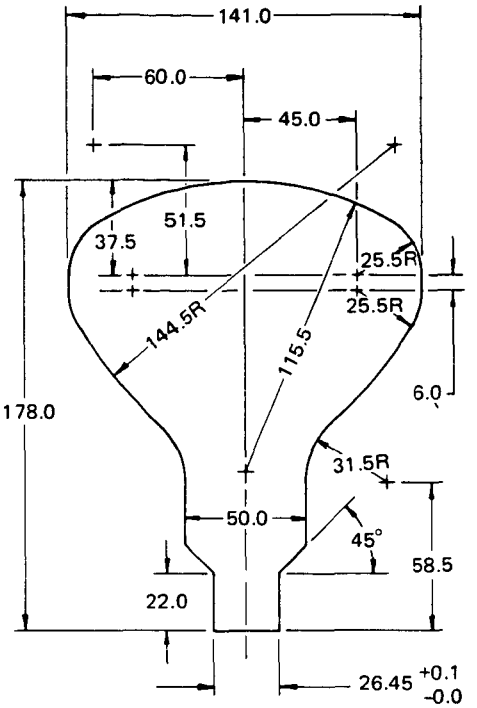


**Figure 6**
**Bulb: RD40**
**Base: Medium Screw (E26)**

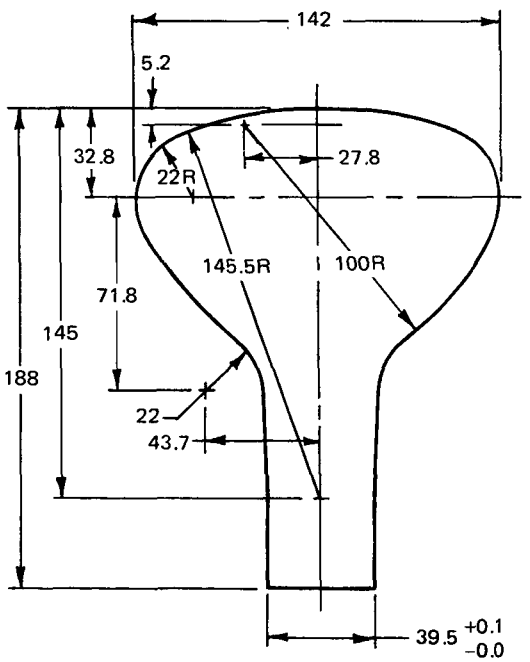


**Figure 7**
**Bulb: RD40**
**Base: Mogul Screw (E39)**

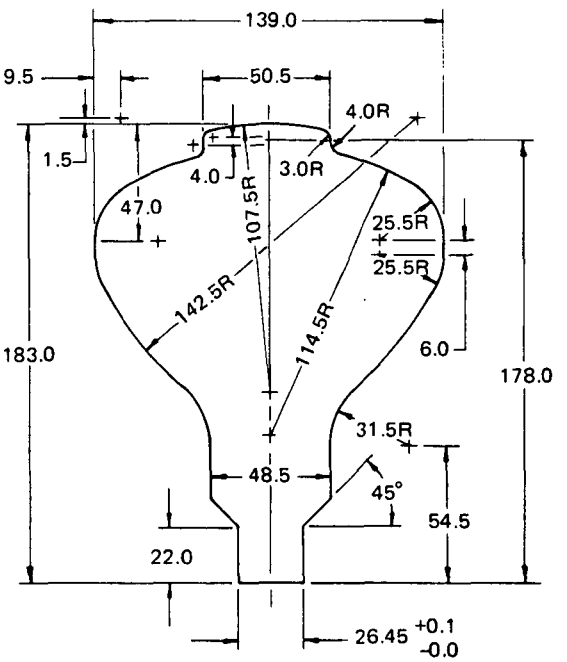


**Figure 8**
**Bulb: R40**
**Base: Medium Screw (E26)**



Copyright National Electrical Manufacturers Association
Provided by IHS under license with NEMA
No reproduction or networking permitted without license from IHS
Not for Resale