STD.NEMA C78.1375-ENGL 1996 6470247 0513024 T34

AMERICAN NATIONAL STANDARD

American National Standard

ANSI C78.1375-1996

AMERICAN NATIONAL STANDARD FOR ELECTRIC LAMPS— 400-WATT, M59 SINGLE-ENDED METAL-HALIDE LAMPS

NATIONAL ELECTRICAL MANUFACTURERS ASSOCIATION
1300 NORTH 17TH STREET, SUITE 1847, ROSSLYN, VA 22209
(703) 841-3200 FAX: (703) 841-3300

Copyright National Electrical Manufacturers Association
Provided by IHS under license with NEMA
No reproduction or networking permitted without license from IHS

Not for Resale

STD.NEMA C78.1375-ENGL 1996 ■ 6470247 0513025 970 ■

ANSI C78.1375-1996
Revision of ANSI C78.1375-1990

American National Standard
for electric lamps:

400-Watt, M59 Single-Ended Metal-Halide Lamps

Secretariat

National Electrical Manufacturers Association
1300 North 17th Street, Suite 1847, Rosslyn, VA 22209

Approved November, 1996
American National Standards Institute

Copyright National Electrical Manufacturers Association
Provided by IHS under license with NEMA
No reproduction or networking permitted without license from IHS

Not for Resale

American National Standard

Approval of an American National Standard requires verification by ANSI that the requirements for due process, consensus, and other criteria for approval have been met by the standards developer.

Consensus is established when, in the judgment of the ANSI Board of Standards Review, substantial agreement has been reached by directly and materially affected interests. Substantial agreement means much more than a simple majority, but not necessarily unanimity. Consensus requires that all views and objections be considered, and that a concerted effort be made toward their resolution.

The use of American National Standards is completely voluntary; their existence does not in any respect preclude anyone, whether he has approved the standards or not, from manufacturing, marketing, purchasing, or using products, processes, or procedures not conforming to the standards.

The American National Standards Institute does not develop standards and will in no circumstances give an interpretation of any American National Standard. Moreover, no person shall have the right or authority to issue an interpretation of an American National Standard in the name of the American National Standards Institute. Requests for interpretations should be addressed to the secretariat or sponsor whose name appears on the title page of this standard.

CAUTION NOTICE: This American National Standard may be revised or withdrawn at any time. The procedures of the American National Standards Institute require that action be taken periodically to reaffirm, revise, or withdraw this standard. Purchasers of American National Standards may receive current information on all standards by calling or writing the American National Standards Institute.

Published by

National Electrical Manufacturers Association
1300 North 17th Street, Suite 1847, Rosslyn, VA 22209

Copyright © 1997 by National Electrical Manufacturers Association
All rights reserved.

No part of this publication may be reproduced in any form, in an electronic retrieval system or otherwise, without prior written permission of the publisher.

Printed in the United States of America

Copyright National Electrical Manufacturers Association
Provided by IHS under license with NEMA
No reproduction or networking permitted without license from IHS
Not for Resale

Contents

Page

Foreword iii

1 Lamp designation and description 1
2 Normative references 1
3 Physical characteristics 1
4 Maximum outline drawings 3
5 Electrical characteristics 5
6 Lamp starting voltage and warm-up requirements 5
7 Reference ballast characteristics 6
8 Data for ballast design 6
9 Information for luminaire design 9
Appendix A A-1

Copyright National Electrical Manufacturers Association
Provided by IHS under license with NEMA
No reproduction or networking permitted without license from IHS
Not for Resale

Copyright National Electrical Manufacturers Association
Provided by IHS under license with NEMA
No reproduction or networking permitted without license from IHS

Not for Resale

Foreword (This Foreword is not part of ANSI C78.1375-1996.)

Suggestions for improvement of this standard should be submitted to the C78 Secretariat, National Electrical Manufacturers Association, 1300 North 17th Street, Suite 1847, Rosslyn, VA 22209.

This American National Standard has been approved by the American Standards Committee, C78, and its SubCommittee C78-4 for High-Intensity Discharge Lamps, which covers Metal Halide Lamps. At the time it approved revision of this standard, the C78 Committee had the following members:

Al Rousseau, Chair, C78
Randolph N. Roy, Secretariat
Jeanne L. Spicer, Coordinating Editor

Organization Represented:	*Name of Representative:*
Advance Transformer Company	Norman Grimshaw
Duro-Test Corporation	Herbert Strauss
Edison Electric Institute	William Maguire (Delegate)
Electrical Testing Laboratories	Craig Davenport
General Electric	John Krissinger
Illuminating Engineering Society	Rita M. Harrold
OSRAM SYLVANIA INC.	Peter Bleasby
Philips Lighting Company	Al Rousseau
Underwriters Laboratories, Inc.	David Belt

At the time of approval of this revised standard, SubCommittee C78-4 had the following members:

Mike Tanner, Chair, C78-4
Glenn Garbowicz, Vice Chair

Organization Represented:	*Name of Representative:*
Advance Transformer Company	Norman Grimshaw
	Glenn Garbowicz (Alt)
American Electric	Greg Steinman
City of Los Angeles	Michael M. Cates
Cooper Industries	Tom Burnet
Deltona Lighting Products, Inc.	Don Briner
Duro-Test Corporation	Larry Sheinberg
Edison Electric Institute	William Maguire (Delegate)
Electrical Testing Laboratories	Michael Neary
General Electric Lighting	David Korow
	John Krissinger (Alt)
General Electric Company	Byron Collins
	Michael Owens (Alt)
Holophane Company	Mike L. Tanner
	William Hitchcock (Alt)
Hubbell Lighting, Inc.	Isaac L. Flory, IV
Indy Lighting, Inc.	Ted Yahraus
Lithonia/Hi-Tek Lighting	Fred Carpenter
MagneTek	Bob Boydston
Manufacturera de Reactores, S.A.	Ernesto Mendoza

Copyright National Electrical Manufacturers Association
Provided by IHS under license with NEMA
No reproduction or networking permitted without license from IHS
Not for Resale

ANSI C78.1375-1996
Revision of ANSI C78.1375-1990

OSRAM SYLVANIA INC.	Richard Parrott
	Warren Anderson (Alt)
Philips Lighting Company	Sam Carleton
	Bill Simpson (Alt)
Underwriters Laboratories, Inc.	David Belt
	John Marshall (Alt)
Venture Lighting International	Tom Harding
	Juris Sulcs (Alt)

Copyright National Electrical Manufacturers Association
Provided by IHS under license with NEMA
No reproduction or networking permitted without license from IHS
Not for Resale

400-watt, M59 single-ended metal-halide lamps

1 Lamp designation and description

Metal-halide lamp designations are assigned in accordance with ANSI C78.380.

Designation	Bulb	Base
M59PJ-400	BT37(BT118) or ED37(ED118), clear	Mogul screw (E39)
M59PK-400	BT37(BT118) or ED37(ED118), diffuse	Mogul screw (E39)
M59PL-400	T18 (T57), clear	Mogul screw (E39)

2 Normative references

The following standards contain provisions which, through reference in this text, constitute provisions of this American National Standard. At the time of publication, the editions indicated were valid. All standards are subject to revision, and parties to agreements based on this American National Standard are encouraged to investigate the possibility of applying the most recent editions of the standards indicated below.

ANSI C78.380-1984 (R1993), *Electric Lamps—High-Intensity-Discharge Lamps—Method of Designation*

ANSI C78.387-1995, *Electric Lamps—Metal-Halide Lamps—Methods of Measuring Characteristics*

ANSI C79.1-1994, *Nomenclature for Glass Bulbs Intended for Use with Electric Lamps*

ANSI C81.61-1990, *Electric Lamp Bases*

ANSI C81.63-1991, *Electric Lamp Base and Lampholder Gauges*

ANSI C82.4-1992, *Ballasts for High-Intensity- Discharge and Low Pressure Sodium Lamps (Multiple Supply Type)*

ANSI C82.5-1990 (R1995), *Reference Ballasts for High-Intensity-Discharge Lamps*

ANSI C82.6-1985 (R1995) and ANSI C82.6a-1988 (R1995), *Ballasts for High-Intensity-Discharge Lamps—Methods of Measurement*

ANSI C82.9-1996, *Definitions for High-Intensity-Discharge and Low Pressure Sodium Lamps, Ballasts, and Transformers*

ANSI/UL 1572-1995, *Standard for Safety, High-Intensity-Discharge Lighting Fixtures*

3 Physical characteristics

3.1 Bulb designations

Bulb designations are defined in ANSI C79.1. Due to the long term use of the conventional method of bulb designations, their use will continue herein with the equivalent metric bulb designations shown in parentheses (i.e. BT28 [BT90]) in contrast with the use of metric primary dimensions elsewhere in this standard.

Copyright National Electrical Manufacturers Association
Provided by IHS under license with NEMA
No reproduction or networking permitted without license from IHS
Not for Resale

3.2 Base specifications

Screw-shell-type bases are specified in ANSI C81.61. Compliance shall be checked by the relevant gauges in ANSI C81.63.

3.3 General characteristics

With BT37 (BT118) or ED37 (ED118) bulb:

Nominal diameter	118 mm (4.6 in)
Maximum overall length (MOL)	292 mm (11.5 in)
Light center length (LCL)	178 mm ± 6 mm (7 in ± 0.24 in)
Effective Arc Length	39 mm ± 7 mm (1.54 in ± 0.28 in)
Maximum electrode tip deviation from base axis (apex at base eyelet)	3 degrees
Operating position limitation	As indicated by lamp marking
Maximum permissible bulb temperature	400°C (752°F)
Maximum permissible base temperature	210°C (410°F)

With T18 (T57) bulb:

Nominal diameter	57 mm (2.2 in)
Maximum overall length (MOL)	248 mm (9.75in)
Light center length (LCL)	146 mm + 3 mm (5.75 in + 0.12 in)
Effective Arc Length	39 mm + 7 mm (1.54 in + 0.28 in)
Maximum electrode tip deviation from base axis (apex at base eyelet)	3 degrees
Operating position limitation	As indicated by lamp marking
Maximum permissible bulb temperature	430°C (806°F)
Maximum permissible base temperature	210°C (410°F)

Copyright National Electrical Manufacturers Association
Provided by IHS under license with NEMA
No reproduction or networking permitted without license from IHS
Not for Resale

4 Maximum outline drawings

Figures 1(a) and 1(b) define the maximum outline dimensional limits, including eccentricity, of the lamps. The figures do not define the actual bulb configuration. All dimensions are in millimeters.

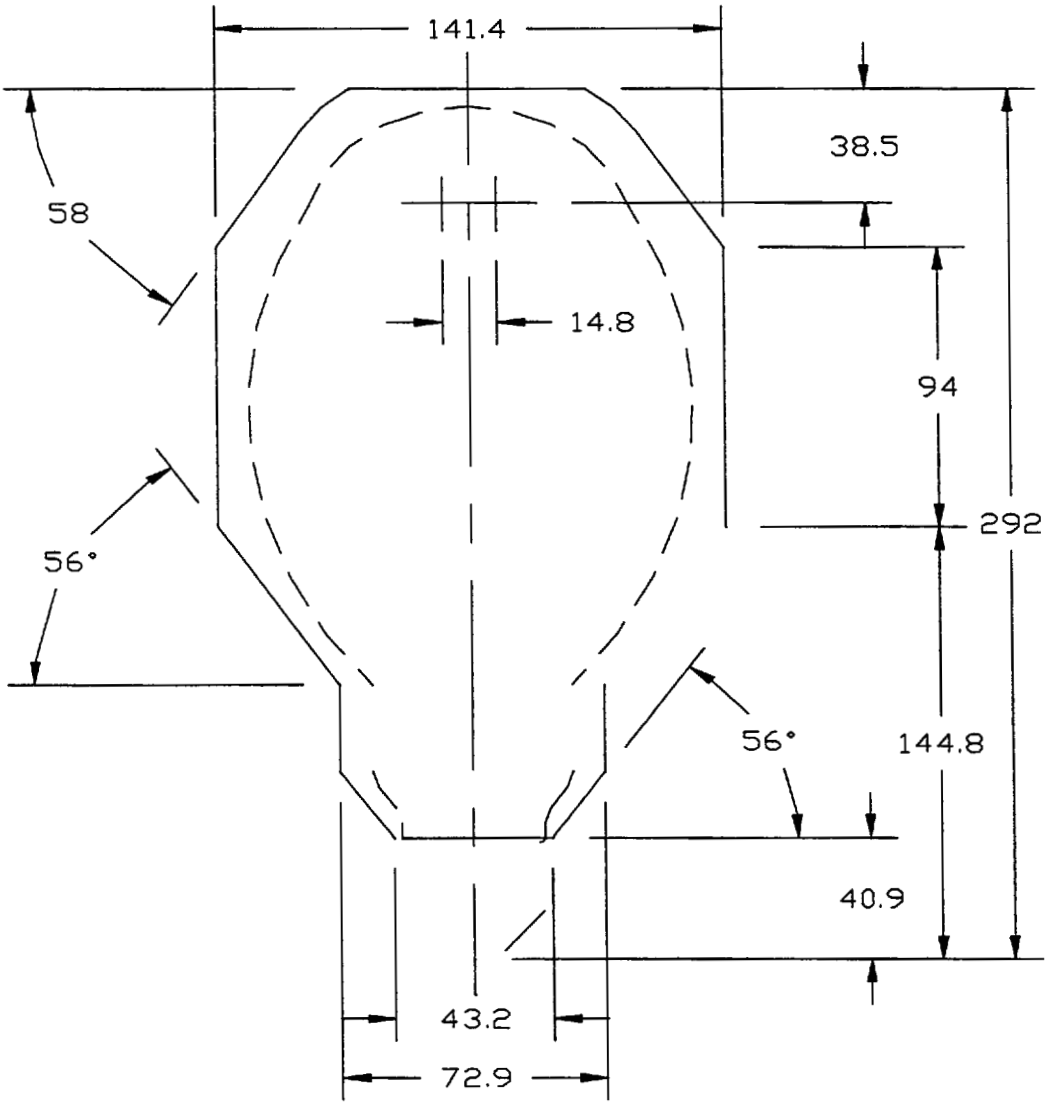

Bulb:	BT37 (BT118) or ED37 (ED118)
Base:	Mogul Screw (E39)
MOL:	292 mm
Eccentricity:	3 degrees

Figure 1a—Maximum outline drawing

Copyright National Electrical Manufacturers Association
Provided by IHS under license with NEMA
No reproduction or networking permitted without license from IHS
Not for Resale

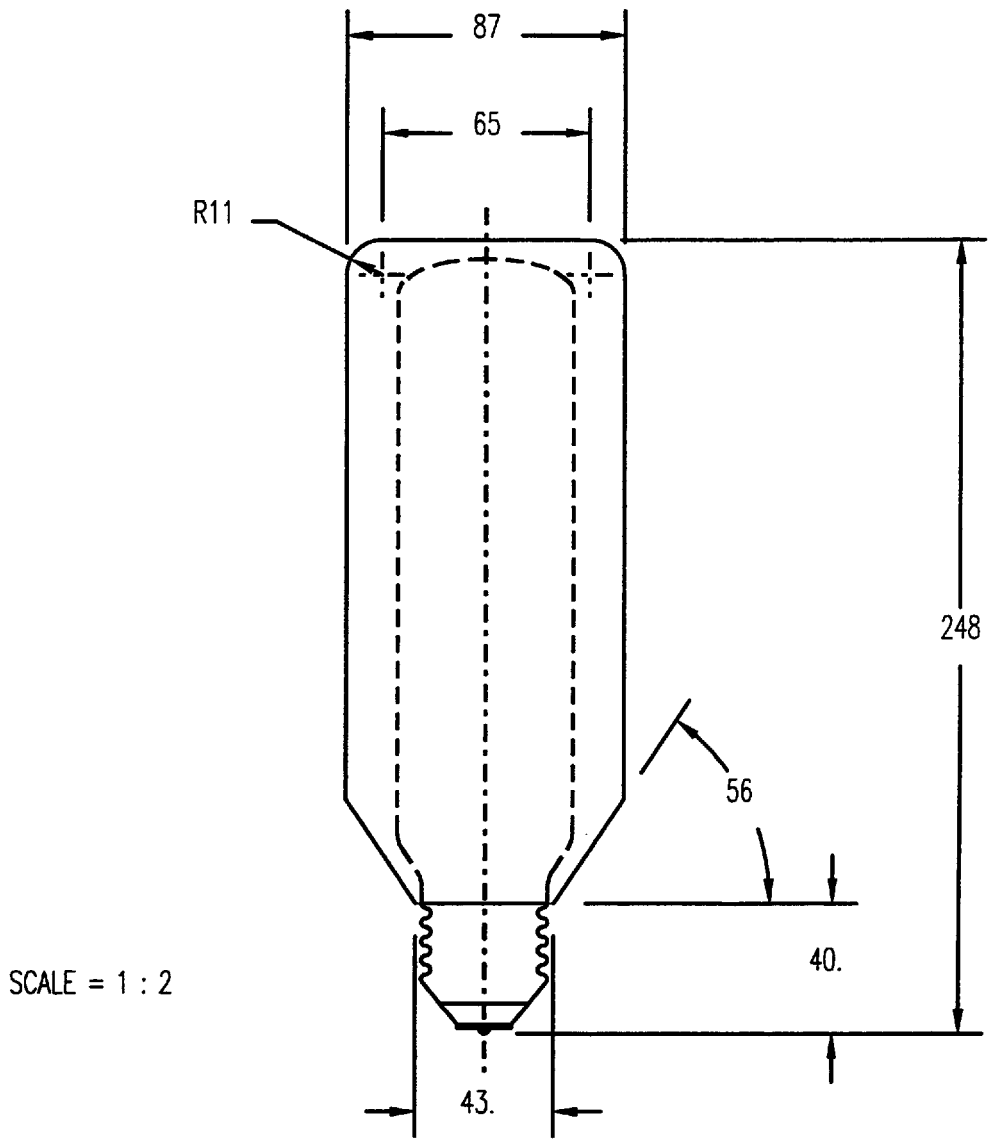

Bulb:	**T18 (T557)**
Base:	**Mogul Screw (E39)**
MOL:	**248 mm**
Eccentricity:	**3 degrees**

Figure 1b—Maximum outline drawing

Copyright National Electrical Manufacturers Association
Provided by IHS under license with NEMA
No reproduction or networking permitted without license from IHS
Not for Resale

5 Electrical characteristics

See ANSI C78.387 for measurement procedures.

Lamps shall be measured in the vertical, base-up, position unless otherwise designated by the lamp manufacturer.

5.1 Lamp operating characteristics at 100 hours operation

	Vertical, Base Up*			Horizontal		
	Min	Nom	Max	Min	Nom	Max
Voltage at lamp terminals (volts, rms)	120	135	150	118	133	148
Lamp current (amperes, rms)				–	3.25	–
Lamp wattage (watts)				–	400	–

*Unless otherwise designated by the lamp manufacturer.

The preceding lamp operating characteristics are based on operation in an ambient temperature of 25°C ± 5°C (77°F± 9°F) on a reference ballast as shown in section 7.

5.2 Lamp reignition voltage spike

The reignition voltage spike during warm-up for any lamp shall not exceed 150 volts peak throughout life when operated on a linear reactor ballast having the following characteristics:

Supply voltage..... 350 volts
Ballast short circuit current..... 4.0 amperes
Impedance ..... 87.5 ohms
Power factor..... 0.075 ± 0.005
Linearity..... Requirements identical to reference ballasts (See ANSI C82.5)

5.3 Lamp reignition voltage (Vr)

Maximum value through life as measured on a reference ballast in section 7. (TBD) volts, peak

6 Lamp starting voltage and warm-up requirements

See ANSI C78.387 for measurement procedures.

Lamps shall be measured in the vertical, base-up, position unless otherwise designated by the lamp manufacturer.

6.1 Lamp starting voltage requirements as a function of time and temperature

6.1.1 Lamp starting voltage requirements for lamps not requiring auxiliary starting circuits

Lamps shall start within the time specified at the ambient temperature indicated when the following sine-wave open-circuit test voltages are applied. Lamps shall start throughout the range of their rated life, under these conditions.

Copyright National Electrical Manufacturers Association
Provided by IHS under license with NEMA
No reproduction or networking permitted without license from IHS
Not for Resale

Temperature	Volts, rms	Volts, peak	Time
10°C ● 1°C (50°F ± 2°F)	350	495	2 Mins.
-30°C ± 1°C (-22°F ± 2°F)	382	540	2 Mins.

6.1.2 Lamp starting voltage requirements for lamps requiring auxiliary starting circuits

(Reserved for future consideration)

6.2 Lamp warm-up requirement

A bare lamp operating in still air at an ambient temperature of 25°C ± 5°C (77°F ● 9°F) and at the minimum specified starting current shall reach 95% of the specified minimum lamp operating voltage in not more than 10 minutes.

7 Reference ballast characteristics

See ANSI C82.5 for the general specifications for reference ballasts.

Supply voltage..... 220 volts*
Reference current..... 3.25 amperes
Impedance..... 45 ohms
Power factor..... 0.075 ±0.005
Frequency..... 60 Hz

* A momentary higher open-circuit voltage may be necessary to start the lamp where an auxiliary starting circuit is not provided.

8 Data for ballast design

The ballast requirements shall be met throughout the full range of ballast rated supply voltages. They apply to ballasts integral to the luminaire as well as remotely connected ballasts and HID starters (that is, ignitors). Capacitive loading across the lampholder terminals may be necessary to simulate characteristics of a remotely connected ballast.

For additional limits on ballast performance, see ANSI C82.4.

8.1 Requirements for lag ballasts

8.1.1 Lag ballasts without auxiliary starting circuits

A lag ballast without an auxiliary starting circuit shall satisfy the following minimum open-circuit requirements for starting and sustaining the arc discharge of a lamp:

Temperature	Minimum Open-Circuit Voltage volts, rms	volts, peak	Probability of Starting
10°C ± 1°C (50°F ± 2°F)	350	495	98% for 0-hour lamps
-30°C ± 1°C (-22°F ± 2° F)	382	540	90% for 100-hour lamps

8.1.2 Lag ballasts with auxiliary starting circuits

(Reserved for future consideration)

Copyright National Electrical Manufacturers Association
Provided by IHS under license with NEMA
No reproduction or networking permitted without license from IHS
Not for Resale

8.2 Requirements for peak lead ballast

8.2.1 Voltages for reliable starting

A peak lead ballast shall supply the following minimum open-circuit voltage requirements for starting, within the time specified in section 6.1.1, and sustaining the arc discharge of a lamp.

Temperature	Minimum volts, rms	Open-Circuit Voltage Crest Factor	Probability of Starting
10°C ± 1°C (50°F ± 2°F)	280*	1.8	98% for 0-hour lamps
-30°C ± 1°C (-22°F ± 2°F)	295**	1.8	90% for 100-hour lamps

* The rms open-circuit voltage may be reduced by 10 volts for each 0.1 increase of the voltage crest factor, down to 240 volts rms, as the lowest value.

** The rms open-circuit voltage may be reduced by 10 volts for each 0.1 increase of the voltage crest factor, down to 275 volts rms, as the lowest value.

8.2.2 Current waveshape characteristics

The following current waveshape characteristics, as determined by ballast design, are required to sustain a lamp throughout its warm-up period. See ANSI C82.6 for measurement procedures.

1. Current slope (di/dt), minimum ..... 1.0 amperes per millisecond (See Note 1)
2. Off time (OT), maximum ..... 2.75 milliseconds
3. Peak current, maximum ..... 9.0 amperes
4. Overshoot (OS), maximum ..... 100 milliamperes (See Note 2)

NOTES
1 Current slope di/dt is measured within a 100-microsecond window centered at zero crossing.
2 Overshoot is measured with a maximum source impedance of 0.30 ohms.

8.2.3 Minimum sustaining voltage (Vss)

Sustaining voltage, Vss, is defined in ANSI C82.9 and is measured in accordance with ANSI C82.6.

The ballast shall meet the following conditions, as shown in Table 1, at its minimum rated input voltage for reliable lamp operation.

Table 1– Minimum Sustaining Voltage (V_{ss})
Current Slope (di/dt), amperes per millisecond, at i=o

Off-time (Milliseconds)	1.0	1.5	2.0	2.5	3.0	3.5	4.0
2.75	294	285	276	266	257	247	238
2.50	288	279	269	260	251	241	232
2.00	276	266	257	248	238	229	220
1.50	263	254	245	235	226	217	207
1.00	251	242	232	223	214	204	195
0.50	239	229	220	210	201	192	183

The values given in this table are derived from the equation:

$$V_{SS} = C1 + C2(OT) - C3\ (di/dt)$$

Copyright National Electrical Manufacturers Association
Provided by IHS under license with NEMA
No reproduction or networking permitted without license from IHS
Not for Resale

Where:

V_{ss} = Minimum sustaining voltage in volts, (rms)
OT = Off-time in milliseconds
di/dt = Current slope at i=0 in amperes per millisecond
C1 = 245
C2 = 24.7
C3 = 18.7

8.2.4 Peak lead ballasts with auxiliary starting circuits

(Reserved for future consideration)

8.3 Starter requirements

(Reserved for future consideration)

8.4 Starting current requirements

Amperes, rms	Lag Ballasts	Peak-Lead Ballasts
Minimum	3.2	3.2
Maximum	5.0	5.0

Starting current is measured 5 to 15 seconds after the lamp has started.

To protect lamps during initial warm-up, maximum peak rectification current for lag ballasts shall be TBD amperes, peak. The peak value shall be measured with a suitable rectifying load substituted for the lamp. Refer to lamp manufacturer for details.

8.5 Current crest factor

The lamp current crest factor, at any rated supply voltage, during warm-up and operation of a reference lamp shall not exceed 1.8.

8.6 Maximum voltage across lamp terminals

8.6.1 Non-pulse-start circuits

A ballast shall not supply to the lamp terminals a voltage in excess of the following values:

Duration	Applied Voltage
First second	2150 volts, peak
Continuous	528 volts, rms

8.6.2 Pulse-start circuits

(Reserved for future consideration)

8.7 Lamp operating wattage

The operating wattage of a bare lamp is measured in its designated operating position on a ballast throughout its range of rated supply voltages in a still air ambient of 25°C ± 5°C (77°F ± 9°F). The following wattage limits apply:

Copyright National Electrical Manufacturers Association
Provided by IHS under license with NEMA
No reproduction or networking permitted without license from IHS
Not for Resale

	Minimum (watts)	Maximum (watts)
Wattage limits, 100-hour lamps	320	480 *
Wattage limits through life (At all rated input voltages)	TBD	TBD *

Lamps shall operate within these limits throughout the full range of lamp voltage tolerance. When measured on a reference ballast, the range of lamp voltage through life is TBD to TBD.

To meet these limits, a ballast at 100% rated input voltage shall operate a reference lamp within ± 5% of the wattage delivered to the same lamp in the same position by a reference ballast. Also the ballast, throughout the input voltage range for which it was intended, shall operate a reference lamp within ± 15% of the wattage delivered to that reference lamp by a reference ballast at its rated voltage.

The wattage design center of a ballast intended for this lamp shall be 400 watts.

***CAUTION:** Specific wattage limits are based on normal tolerance distributions of lamp voltage, ballast adjustment, and line voltage. If these tolerances are extreme and in the same direction, the specified wattage limits could be exceeded.

For additional limits of ballast performance, see ANSI C82.4.

8.8 Minimum lamp operating wattage

Operation of metal halide lamps below the wattage limits of this standard will lower lamp efficacy and may result in color shift, arc instability, flicker and reduced lamp life. The lamp manufacturer shall be consulted before operating metal halide lamps at reduced wattage or with dimming circuits.

9 Information for luminaire design

CAUTION: To insure correct thermal operation, UV protection and non-passive failure protection, the luminaire shall be designed in accordance with lamp manufacturers' recommendations for use and application.

Also see ANSI/UL 1572 for requirements on the construction of luminaires.

9.1 Voltage rise, luminaire effect limit

The lamp voltage of reference lamps, operating on a sinusoidal power supply of 60 Hz with the specified reference ballast at its rated input voltage, shall not change more than TBD volts when going from stabilized operation in open air to stabilized operation in a luminaire.

9.2 Lamp failure mechanism

Metal-halide lamps are constructed of a glass bulb with an internal arc tube made of quartz. These arc tubes operate under high pressure (typically 5 atmospheres) and temperature (typically 900°C). The arc tube may unexpectedly rupture due to internal causes or external factors. When this occurs, the glass bulb surrounding the arc tube may break and particles of extremely hot quartz from the arc tube and glass fragments from the glass bulb may be discharged into the fixture enclosure and possibly the surrounding environment, thereby creating a risk of personal injury or other hazard.

Copyright National Electrical Manufacturers Association
Provided by IHS under license with NEMA
No reproduction or networking permitted without license from IHS
Not for Resale

ANSI C78.1375-1996
Revision of ANSI C78.1375-1990

Copyright National Electrical Manufacturers Association
Provided by IHS under license with NEMA
No reproduction or networking permitted without license from IHS
Not for Resale

6470247 0513333 79T

APPENDIX A
(Informative)

A.1 Related standards

This standards are listed for information only.

ANSI C78.30-1996, *Procedure for Use in Preparation of Incandescent Lamp Space Drawings*[1]

ANSI C81.62-1991, *Lampholders for Electric Lamps*

[1] Available from National Electrical Manufacturers Association, 1300 North 17th Street, Suite 1847, Rosslyn, VA 22209.

Copyright National Electrical Manufacturers Association
Provided by IHS under license with NEMA
No reproduction or networking permitted without license from IHS
Not for Resale

Copyright National Electrical Manufacturers Association
Provided by IHS under license with NEMA
No reproduction or networking permitted without license from IHS

Not for Resale