American National Standard

for electric lamps –

160-watt 120-volt B87 self-ballasted mercury lamps

Approved June 11, 1990

Secretariat: National Electrical Manufacturers Association

1. Lamp Designation and Description

Self-ballasted mercury lamp designations are assigned in accordance with ANSI C78.380.

Designation	Bulb	Base
B87YL-160	ED23-1/2 phosphor coated	Medium Screw (E26)
B87YM-160	PS30 phosphor coated	Medium Screw (E26)
B87YN-160	PS30 phosphor coated	Medium Screw (E26)
B87YP-160	RL38 inside reflector stippled face (WFL)	Medium Screw (E26)
B87YR-160	RL38 inside reflector stippled face (WFL)	Medium Skirted Screw (E26)
B87YS-160	RD40 inside reflector frosted face (VWFL)	Medium Screw (E26)
B87YT-160	RD40 inside reflector frosted face (VWFL)	Medium Screw (E26)
B87YV-160	R40 phosphor coated on inside reflector, clear face (VWFL)	Medium Screw (E26)

2. Referenced American National Standards

This standard is intended for use with the following American National Standards. When these standards are superseded by a revision approved by the American National Standards Institute, Inc, the revision shall apply.

An American National Standard implies a consensus of those substantially concerned with its scope and provisions. An American National Standard is intended as a guide to aid the manufacturer, the consumer, and the general public. The existence of an American National Standard does not in any respect preclude anyone, whether he has approved the standard or not, from manufacturing, marketing, purchasing, or using products, processes, or procedures not conforming to the standard. American National Standards are subject to periodic review and users are cautioned to obtain the latest editions.

The American National Standards Institute does not develop standards and will in no circumstances give an interpretation of any American National Standard. Moreover, no person shall have the right or authority to issue an interpretation of an American National Standard in the name of the American National Standards Institute.

CAUTION NOTICE: This American National Standard may be revised or withdrawn at any time. The procedures of the American National Standards Institute require that action be taken to reaffirm, revise, or withdraw this standard no later than five years from the date of approval. Purchasers of American National Standards may receive current information on all standards by calling or writing the American National Standards Institute.

Copyright National Electrical Manufacturers Association
Provided by IHS under license with NEMA | 990 by ANSI American National Standards Institute, 1430 Broadway, New York, N.Y. 10018
No reproduction or networking permitted without license from IHS
Not for Resale

ANSI C78.379-1983, Electric Lamps—Incandescent and High-Intensity Discharge Reflector Lamps—Classification of Beam Patterns

ANSI C78.380-1984, Electric Lamps—High-Intensity Discharge Lamps—Method of Designation

ANSI C79.1-1980 (R1984), Nomenclature for Glass Bulbs Intended for Use with Electric Lamps

ANSI C81.10-1976 (R1982), C81.10a-1979 (R1982), C81.10b-1983, and C81.10d-1986, Specifications for Electric Lamp Bases and Holders—Screw-Shell Types[1]

ANSI C81.61-1990, Electric Lamp Bases[1]

3. Physical Characteristics

3.1 Bulb Designations
Bulb designations are defined in ANSI C79.1.

3.2 Base Specifications
Screw-shell-type bases are described in ANSI C81.10, C81.10a, C81.10b, C81.10d, and C81.61.

3.3 Beam Patterns
Beam patterns are described in ANSI C78.379.

3.4 General Characteristics
With ED23-1/2 bulb:
- Nominal diameter ..... 75 mm (2.938 in)
- Maximum overall length ..... 178 mm (7.01 in)
- Arc tube light center length ..... 116 mm ± 10 mm (4.57 in ± 0.39 mm)

With PS30 bulb (B87YM-160):
- Nominal diameter ..... 95 mm (3.75 in)
- Maximum overall length ..... 205 mm (8.10 in)
- Arc tube light center length ..... 151 mm ± 8 mm (5.94 in ± 0.32 mm)

With PS30 bulb (B87YN-160):
- Nominal diameter ..... 95 mm (3.75 in)
- Maximum overall length ..... 186 mm (7.32 in)
- Arc tube light center length ..... 135 mm ± 5 mm (5.31 in ± 0.20 mm)

With RL38 bulb and medium screw base (E26):
- Nominal diameter ..... 121 mm (4.75 in)
- Maximum overall length ..... 147 mm (5.79 in)
- Arc tube light center length ..... 89 mm ± 3 mm (3.50 in ± 0.12 mm)

With RL38 bulb and medium skirted screw base (E26):
- Nominal diameter ..... 121 mm (4.75 in)
- Maximum overall length ..... 166.5 mm (6.55 in)
- Arc tube light center length ..... 100 mm ± 3 mm (3.94 in ± 0.12 mm)

With RD40 bulb:
- Nominal diameter ..... 127 mm (5.00 in)
- Overall length* ..... 175 mm ± 3 mm (6.89 in ± 0.12 mm)
- Maximum overall length ..... 183 mm (7.20 in)
- Arc tube light center length ..... 99 mm ± 3 mm (3.90 in ± 0.12 mm)

*Overall length does not include the dome on the face of the bulb.

[1] At the time of publication of this standard, the standard sheets dealing with electric lamp bases that appeared in ANSI C81.10-1976 and its supplements were superseded by ANSI C81.61-1990. The remaining standard sheets, dealing with electric lamp holders and gauges, are still in effect. Contact the secretariat for more recent information.

Copyright National Electrical Manufacturers Association
Provided by IHS under license with NEMA
No reproduction or networking permitted without license from IHS
Not for Resale

With R40 bulb:

Nominal diameter	127 mm (5.00 in)
Maximum overall length	178 mm (7.01 in)
Arc tube light center length	110 mm ± 4 mm (4.33 in ± 0.16 mm)

For all bulb sizes listed above:

Arc length	14 mm ± 3 mm (0.55 in ± 0.12 mm)
Maximum electrode tip deviation from base axis (apex at base eyelet)	3 degrees
Incandescent filament location	Surrounding the arc tube and generally in the plane of the arc tube light center
Burning position limitation	As indicated by the lamp marking
Maximum permissible bulb temperature	300°C (572°F)
Maximum permissible base temperature	190°C (374°F)

4. Maximum Outline Drawings

Figure 1 defines the maximum limits, including eccentricity, of the lamp. The figures do not define actual bulb configuration. All dimensions are in millimeters.

5. Electrical Characteristics

5.1 Lamp Operating Characteristics (at 100 hours operation)

Nominal line voltage, volts, rms	120
Allowed line voltage range, volts, rms	115–125

	Vertical and Horizontal
Watts, minimum at 115 volts	132
Watts, nominal at 120 volts	160
Watts, maximum at 125 volts	194
Amperes, rms minimum at 115 volts	1.22
Amperes, rms nominal at 120 volts	1.40
Amperes, rms maximum at 125 volts	1.62
Extinction voltage, rms, maximum	109

The above lamp operating characteristics are based on operation in an ambient temperature of 25°C (77°F) and a 60-Hz sinusoidal power supply.

5.2 Lamp Starting Temperature Limitation

Lamps shall start within an ambient temperature range of –18°C (0°F) to 50°C (122°F).

5.3 Lamp Starting Current (at 0 hours)

Lamp starting current shall not exceed 1.85 amperes when measured at the maximum allowable line voltage of 125 volts. Maximum lamp starting current occurs within approximately 30 seconds after lamp is energized.

5.4 Warm-Up Time

When energized at the minimum allowable line voltage of 115 volts and operated in still air at an ambient temperature of 0°C (32°F), the bare lamp shall operate at a power not in excess of 110% of rated wattage after a period of time not exceeding 2 minutes.

Copyright National Electrical Manufacturers Association
Provided by IHS under license with NEMA
No reproduction or networking permitted without license from IHS
Not for Resale

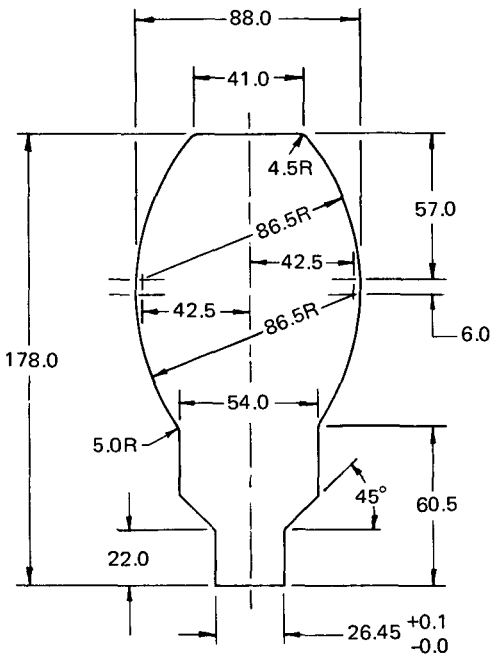

Bulb: ED23-1/2
Base: Medium Screw (E26)
MOL: 178 mm
Eccentricity: 3 degrees

(a)

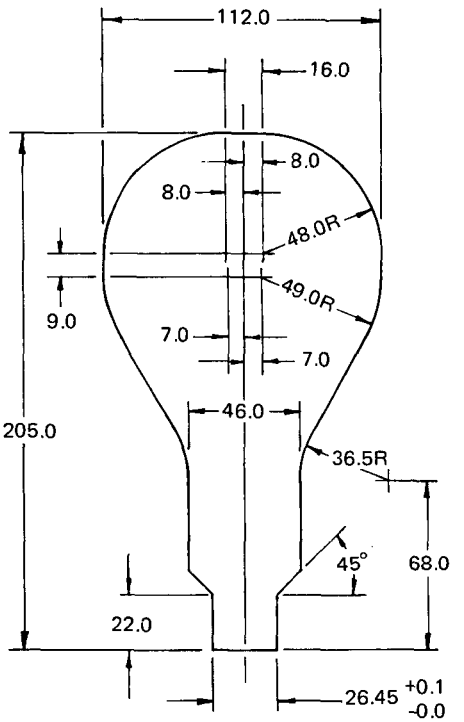

Bulb: PS30
Base: Medium Screw (E26)
MOL: 205 mm
Eccentricity: 3 degrees

(b)

NOTE: All dimensions are in millimeters.

Figure 1
Maximum Outline Drawings

Copyright National Electrical Manufacturers Association
Provided by IHS under license with NEMA
No reproduction or networking permitted without license from IHS
Not for Resale

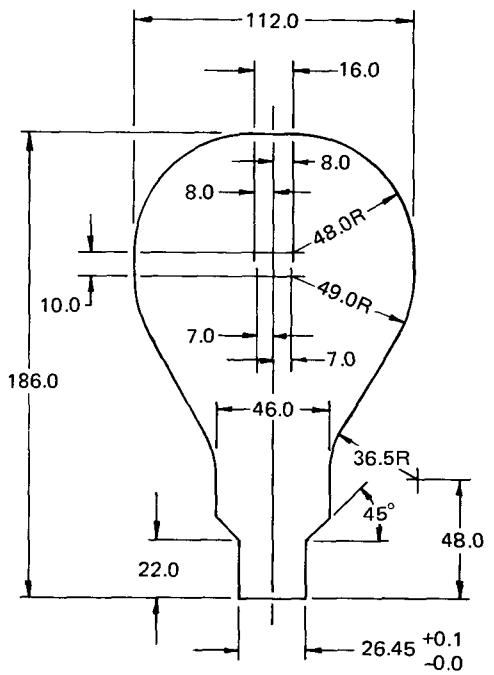

Bulb: PS30
Base: Medium Screw (E26)
MOL: 186 mm
Eccentricity: 3 degrees

(c)

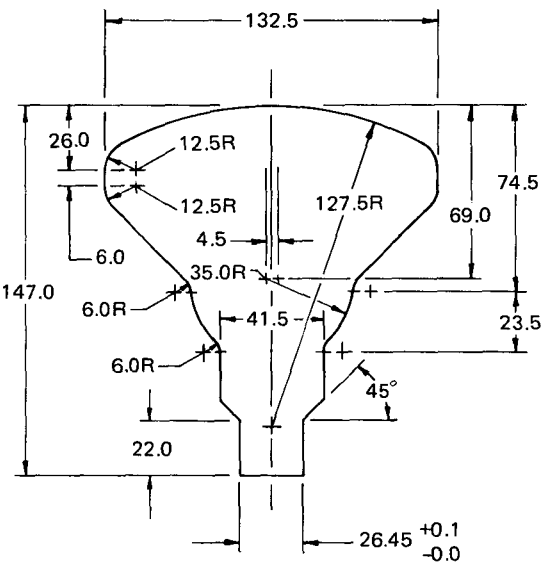

Bulb: RL38
Base: Medium Screw (E26)
MOL: 147 mm
Eccentricity: 3 degrees

(d)

NOTE: All dimensions are in millimeters.

Figure 1
Maximum Outline Drawings *(continued)*

Copyright National Electrical Manufacturers Association
Provided by IHS under license with NEMA
No reproduction or networking permitted without license from IHS
Not for Resale

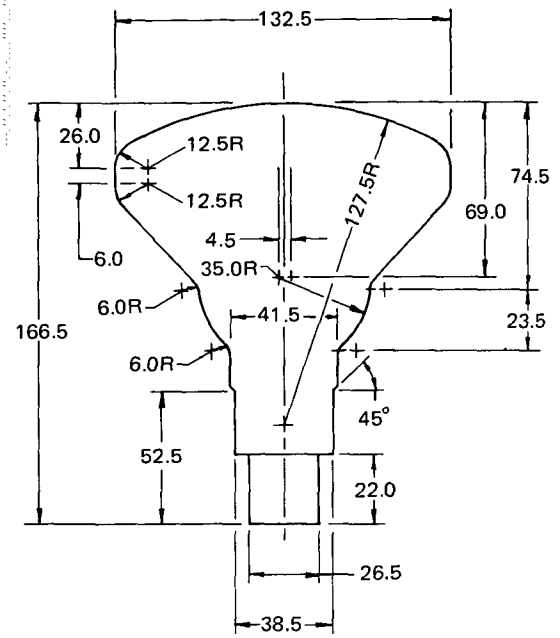

Bulb: RL38
Base: Medium Skirted Screw (E26)
MOL: 166.5 mm
Eccentricity: 3 degrees

(e)

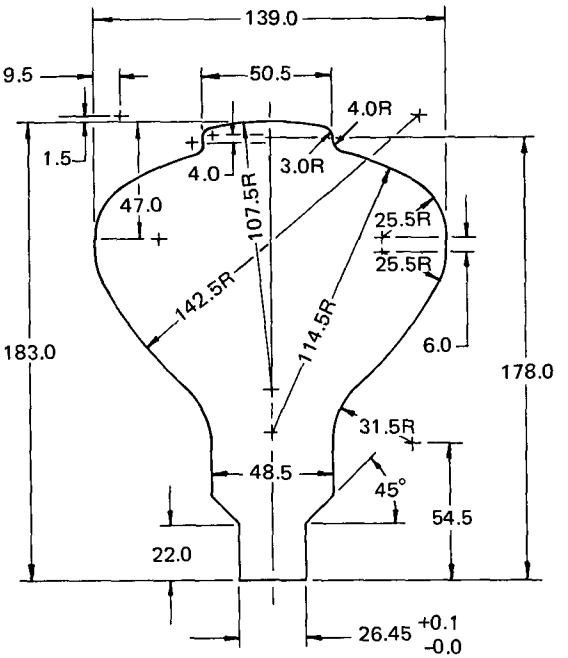

Bulb: RD40
Base: Medium Screw (E26)
MOL: 183.0 mm
Eccentricity: 3 degrees

(f)

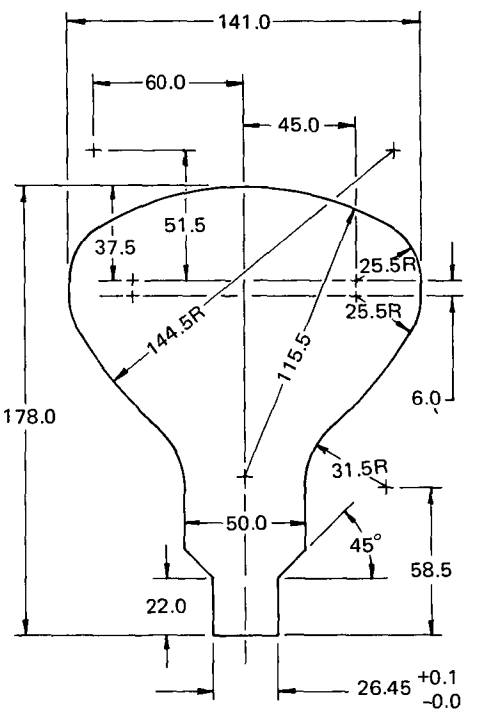

Bulb: RD40
Base: Medium Screw (E26)
MOL: 178 mm
Eccentricity: 3 degrees

(g)

NOTE: All dimensions are in millimeters.

Figure 1
Maximum Outline Drawings *(continued)*

Copyright National Electrical Manufacturers Association
Provided by IHS under license with NEMA
No reproduction or networking permitted without license from IHS
Not for Resale