American National Standard

for electric lamps —

450-watt, 230-volt, B75 self-ballasted mercury lamps

Approved June 11, 1990 Secretariat: National Electrical Manufacturers Association

1. Lamp Designation and Description

Self-ballasted mercury lamp designations are assigned in accordance with ANSI C78.380.

Designation	Bulb	Base
B75JB-450	BT37, E37, clear	Mogul Screw (E39)
B75JC-450	BT37, E37, phosphor coated	Mogul Screw (E39)
B75JD-450	BT37, E37, semi-phosphor coated	Mogul Screw (E39)
B75JE-450	PS40, clear	Mogul Screw (E39)
B75JF-450	PS40, phosphor coated	Mogul Screw (E39)
B75JG-450	PS40, semi-phosphor coated	Mogul Screw (E39)
B75JJ-450	R60, inside reflector very wide flood (VWFL)	Mogul Screw (E39)
B75JK-450	R60, phosphor coated on inside reflector, clear face, very wide flood (VWF)	Mogul Screw (E39)
B75JH-450	R60, partially phosphor coated on inside reflector, frosted face, very wide flood (VWFL)	Mogul Screw (E39)

2. Referenced American National Standards

This standard is intended for use with the following American National Standards. When these standards are superseded by a revision approved by the American National Standards Institute, Inc, the revision shall apply.

ANSI C78.379-1983, Electric Lamps—Incandescent and High-Intensity Discharge Reflector Lamps—Classification of Beam Patterns

An American National Standard implies a consensus of those substantially concerned with its scope and provisions. An American National Standard is intended as a guide to aid the manufacturer, the consumer, and the general public. The existence of an American National Standard does not in any respect preclude anyone, whether he has approved the standard or not, from manufacturing, marketing, purchasing, or using products, processes, or procedures not conforming to the standard. American National Standards are subject to periodic review and users are cautioned to obtain the latest editions.

The American National Standards Institute does not develop standards and will in no circumstances give an interpretation of any American National Standard. Moreover, no person shall have the right or authority to issue an interpretation of an American National Standard in the name of the American National Standards Institute.

CAUTION NOTICE: This American National Standard may be revised or withdrawn at any time. The procedures of the American National Standards Institute require that action be taken to reaffirm, revise, or withdraw this standard no later than five years from the date of approval. Purchasers of American National Standards may receive current information on all standards by calling or writing the American National Standards Institute.

Copyright National Electrical Manufacturers Association
Provided by IHS under license with NEMA
No reproduction or networking permitted without license from IHS
Not for Resale

ANSI C78.380-1984, Electric Lamps—High-Intensity-Discharge Lamps—Method of Designation

ANSI C79.1-1980(R1984), Nomenclature for Glass Bulbs Intended for Use with Electric Lamps

ANSI C81.10-1976 (R1982), C81.10a-1979 (R1982), C81.10b-1983, and C81.10d-1986, Specifications for Electric Lamp Bases and Holders—Screw-Shell Types[1]

ANSI C81.61-1990, Electrical Lamp Bases[1]

3. Physical Characteristics

3.1 Bulb Designations
Bulb designations are defined in ANSI C79.1.

3.2 Base Specifications
Screw-shell-type bases are described in ANSI C81.61.

3.3 Beam Patterns
Beam patterns are described in ANSI C78.379.

3.4 General Characteristics

With BT37, E37 bulb:	
Nominal diameter	118 mm (4.63 in)
Maximum overall length	292 mm (11.5 in)
Light center length	178 mm ± 6 mm (7 in)
With PS40 bulb:	
Nominal diameter	127 mm (5 in)
Maximum overall length	248 mm (9.75 in)
Light center length	178 mm ± 6 mm (7 in)
With R60 bulb:	
Nominal diameter	191 mm (7.5 in)
Maximum overall length	258 mm (10.15 in)
Light center length	—
For all bulb sizes listed above	
Arc length	57 mm ± 10 mm (2.25 in)
Maximum electrode tip deviation from base axis (apex at base eyelet)	3 degrees
Incandescent filament location	Surrounding the arc tube and generally in the plane of the arc tube light center
Burning position	Any
Maximum permissible bulb temperature	400° C (752° F)
Maximum permissible base temperature	210° C (410° F)

4. Maximum Outline Drawing

Figures 1(a), 1(b), and 1(c) define the maximum limits, including eccentricity of the lamp. The figures do not define actual bulb configuration. All dimensions are in millimeters.

[1]At the time of publication of this standard, the standard sheets dealing with electric lamp bases that appeared in ANSI C81.10-1976 and its supplements were superseded by ANSI C81.61-1990. The remaining standard sheets, dealing with electric lamp holders and gages, are still in effect. These standard sheets will be superseded by two new American National Standards that will be designated as ANSI C81.62 and ANSI C81.63. Contact the secretariat for more recent information.

Copyright National Electrical Manufacturers Association
Provided by IHS under license with NEMA
No reproduction or networking permitted without license from IHS
Not for Resale

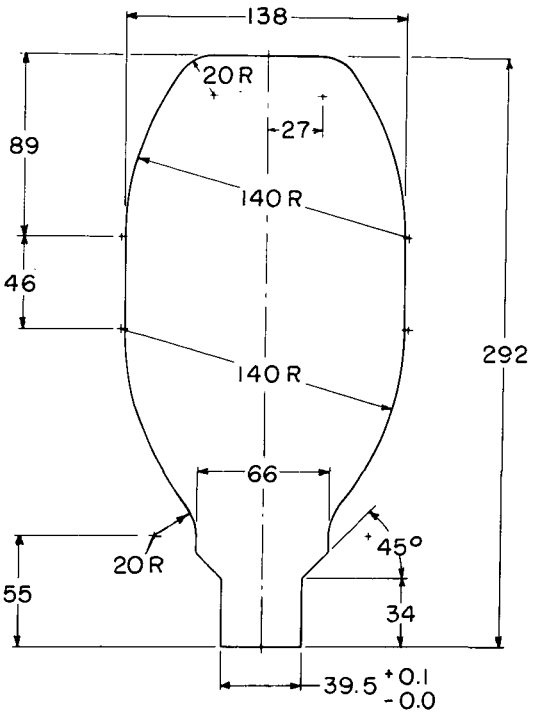

Bulb: BT37, E37
Base: Mogul Screw (E39)
MOL: 292 mm
Eccentricity: 3 degrees

(a)

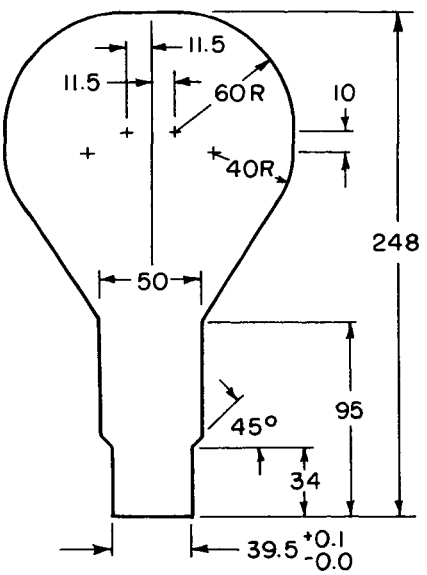

Bulb: PS40
Base: Mogul Screw (E39)
MOL: 248 mm
Eccentricity: 3 degrees

(b)

All dimensions are in millimeters.

Figure 1
Maximum Outline Drawing

Copyright National Electrical Manufacturers Association
Provided by IHS under license with NEMA
No reproduction or networking permitted without license from IHS
Not for Resale

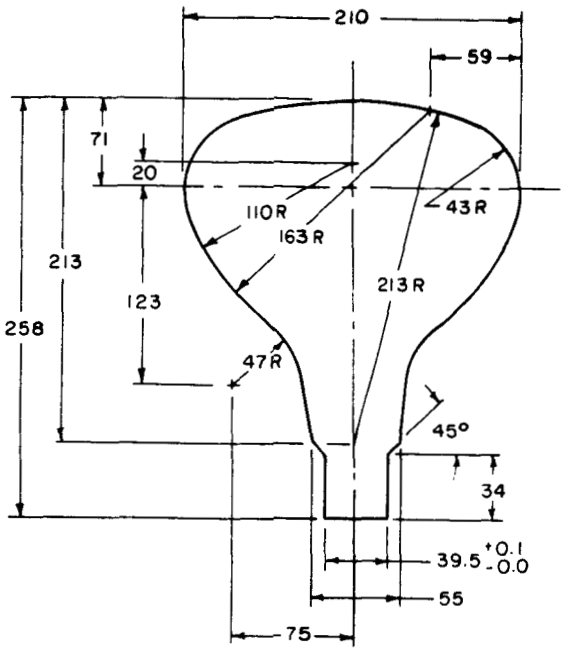

(c)

Bulb: R60
Base: Mogul Screw (E39)
MOL: 258 mm
Eccentricity: 3 degrees

Figure 1
All dimensions are in millimeters. **Maximum Outline Drawing *(continued)***

5. Electrical Characteristics

5.1 Lamp Operating Characteristics (at 100 hours operation)

Nominal line voltage, volts, rms ..... 230 volts
Allowed line voltage range, volts, rms ..... 220-239.9 volts

	Vertical	Horizontal
Watts, minimum at 220 volts	380	370
Watts, nominal at 230 volts	450	455
Watts, maximum at 239.9 volts	525	540
Amperes, rms minimum at 220 volts	1.9	1.9
Amperes, rms nominal at 230 volts	2.1	2.15
Amperes, rms maximum at 239.9 volts	2.25	2.35
Extinction voltage, rms, maximum	195	212

The above lamp operating characteristics are based on operation in an ambient temperature of 25° C (77° F) and a 60-Hz sinusoidal power supply.

5.2 Lamp Starting Temperature

-18° C (0° F) is the low limit of temperature which will assure 95 percent probability of starting 0-hour lamps and 98 percent probability of starting 100-hour lamps at the low limit of line voltage of 220 volts.

5.3 Lamp Starting Current (at 0 hours)

Lamp starting current shall not exceed 3.2 amperes when measured 2 to 4 seconds after the lamp circuit is energized at the maximum allowable line voltage of 239.9 volts.

5.4 Warm-Up Time

When energized at the minimum allowable line voltage of 220 volts and operated in still air at an ambient temperature of 0° C (32° F), the bare lamp shall operate at a power not in excess of 110% of rated wattage after a period of time not exceeding 15 minutes.

Copyright National Electrical Manufacturers Association
Provided by IHS under license with NEMA
No reproduction or networking permitted without license from IHS
Not for Resale