ANSI C78.1t-1998
Supplement to ANSI C78.1-1991 (R1996)

American National Standard

Approved July 7, 1998 Secretariat: National Electrical Manufacturers Association

for electric lamps:

Dimensional & Electrical Characteristics— Rapid-Start Types— 113-Watt, 96-inch T12, 0.800-Ampere and 1.0 Ampere, Rapid-Start Fluorescent Lamp

An American National Standard implies a consensus of those substantially concerned with its scope and provisions. It is intended as a guide to aid the manufacturer, the consumer, and the general public. The existence of an American National Standard does not in any respect preclude anyone, whether he has approved the standard or not, from manufacturing, marketing, purchasing, or using products, processes, or procedures not conforming to the standards. Users are cautioned to obtain the latest editions.
The American National Standards Institute does not develop standards and will in no circumstances give an interpretation of any American National Standard. Moreover, no person shall have the right or authority to issue an interpretation of an American National Standard in the name of the American National Standards Institute.
CAUTION NOTICE: This American National Standard may be revised or withdrawn at any time. The procedures of the American National Standards Institute require that action be taken periodically to reaffirm, revise, or withdraw this standard. Purchasers of American National Standards may receive current information on all standards by calling or writing the American National Standards Institute.

Copyright ©1998 by National Electrical Manufacturers Association
1300 North 17th Street, Suite 1847, Rosslyn, VA 22209

First Edition
April 1999

Copyright National Electrical Manufacturers Association
Provided by IHS under license with NEMA
No reproduction or networking permitted without license from IHS
Not for Resale

ANSI C78.1t-1998
Supplement to ANSI C78.1-1991 (R1996)

American National Standard

Approval of an American National Standard requires verification by ANSI that the requirements for due process, consensus, and other criteria for approval have been met by the standards developer. An American National Standard implies a consensus of those substantially concerned with its scope and provisions. Consensus is established when, in the judgment of the ANSI Board of Standards Review, substantial agreement has been reached by directly and materially affected interests. Substantial agreement means much more than a simple majority, but not necessarily unanimity. Consensus requires that all views and objections be considered, and that a concerted effort be made toward their resolution. The existence of an American National Standard does not in any respect preclude anyone, whether he has approved the standard or not, from manufacturing, marketing, purchasing, or using products, processes, or procedures not conforming to the standards. It is intended as a guide to aid the manufacturer, the consumer, and the general public.

The American National Standards Institute does not develop standards and will in no circumstances give an interpretation of any American National Standard. Moreover, no person shall have the right or authority to issue an interpretation of an American National Standard in the name of the American National Standards Institute. Requests for interpretations should be addressed to the Committee Secretariat referred to on the title page.

CAUTION NOTICE: This American National Standard may be revised or withdrawn at any time. The procedures of the American National Standards Institute require that action be taken periodically to reaffirm, revise, or withdraw this standard. Purchasers of American National Standards may receive current information on all standards by calling or writing the American National Standards Institute.

Published by

National Electrical Manufacturers Association

No part of this publication may be reproduced in any form, in an electronic retrieval system or otherwise, without prior written permission of the publisher.

Printed in the United States of America

Copyright ©1998 by National Electrical Manufacturers Association
1300 North 17th Street, Suite 1847, Rosslyn, VA 22209

First Edition
April 1999

Copyright National Electrical Manufacturers Association
Provided by IHS under license with NEMA
No reproduction or networking permitted without license from IHS

Not for Resale

STD.ANSI C78.1-ENGL 1991 ■ 0724150 0557564 454 ■

ANSI C78.1r-1998
Supplement to ANSI C78.1-1991 (R1996)

American National Standard

Approved March 23, 1998 | Secretariat: National Electrical Manufacturers Association

for electric lamps:

Dimensional and Electrical Characteristics for Fluorescent Lamps— Rapid-Start Types— Requirement for Ballast Design— Paragraph 12.5

An American National Standard implies a consensus of those substantially concerned with its scope and provisions. It is intended as a guide to aid the manufacturer, the consumer, and the general public. The existence of an American National Standard does not in any respect preclude anyone, whether he has approved the standard or not, from manufacturing, marketing, purchasing, or using products, processes, or procedures not conforming to the standards. Users are cautioned to obtain the latest editions.
The American National Standards Institute does not develop standards and will in no circumstances give an interpretation of any American National Standard. Moreover, no person shall have the right or authority to issue an interpretation of an American National Standard in the name of the American National Standards Institute.
CAUTION NOTICE: This American National Standard may be revised or withdrawn at any time. The procedures of the American National Standards Institute require that action be taken periodically to reaffirm, revise, or withdraw this standard. Purchasers of American National Standards may receive current information on all standards by calling or writing the American National Standards Institute.

Copyright © 1998 by National Electrical Manufacturers Association
1300 North 17th Street, Suite 1847, Rosslyn, VA 22209

First Edition
May 1998

Copyright National Electrical Manufacturers Association
Provided by IHS under license with NEMA
No reproduction or networking permitted without license from IHS

Not for Resale

ANSI C78.1r-1998
Supplement to ANSI C78.1-1991 (R1996)

American National Standard

Approval of an American National Standard requires verification by ANSI that the requirements for due process, consensus, and other criteria for approval have been met by the standards developer. An American National Standard implies a consensus of those substantially concerned with its scope and provisions. Consensus is established when, in the judgment of the ANSI Board of Standards Review, substantial agreement has been reached by directly and materially affected interests. Substantial agreement means much more than a simple majority, but not necessarily unanimity. Consensus requires that all views and objections be considered, and that a concerted effort be made toward their resolution. The existence of an American National Standard does not in any respect preclude anyone, whether he has approved the standard or not, from manufacturing, marketing, purchasing, or using products, processes, or procedures not conforming to the standards. It is intended as a guide to aid the manufacturer, the consumer, and the general public.

The American National Standards Institute does not develop standards and will in no circumstances give an interpretation of any American National Standard. Moreover, no person shall have the right or authority to issue an interpretation of an American National Standard in the name of the American National Standards Institute. Requests for interpretations should be addressed to the Committee Secretariat referred to on the title page.

CAUTION NOTICE: This American National Standard may be revised or withdrawn at any time. The procedures of the American National Standards Institute require that action be taken periodically to reaffirm, revise, or withdraw this standard. Purchasers of American National Standards may receive current information on all standards by calling or writing the American National Standards Institute.

Published by

National Electrical Manufacturers Association

No part of this publication may be reproduced in any form, in an electronic retrieval system or otherwise, without prior written permission of the publisher.

Printed in the United States of America

Copyright © 1998 by National Electrical Manufacturers Association
1300 North 17th Street, Suite 1847, Rosslyn, VA 22209

First Edition
May 1998

Copyright National Electrical Manufacturers Association
Provided by IHS under license with NEMA
No reproduction or networking permitted without license from IHS

Not for Resale

ANSI C78.1p-1998
Supplement to ANSI C78.1-1991 (R1996)

American National Standard

Approved March 19, 1998 Secretariat: National Electrical Manufacturers Association

for electric lamps:

R17d-Based Lamps
(Removal of A and B Dimensions)

An American National Standard implies a consensus of those substantially concerned with its scope and provisions. It is intended as a guide to aid the manufacturer, the consumer, and the general public. The existence of an American National Standard does not in any respect preclude anyone, whether he has approved the standard or not, from manufacturing, marketing, purchasing, or using products, processes, or procedures not conforming to the standards. Users are cautioned to obtain the latest editions.
The American National Standards Institute does not develop standards and will in no circumstances give an interpretation of any American National Standard. Moreover, no person shall have the right or authority to issue an interpretation of an American National Standard in the name of the American National Standards Institute.
CAUTION NOTICE: This American National Standard may be revised or withdrawn at any time. The procedures of the American National Standards Institute require that action be taken periodically to reaffirm, revise, or withdraw this standard. Purchasers of American National Standards may receive current information on all standards by calling or writing the American National Standards Institute.

Copyright © 1998 by National Electrical Manufacturers Association
1300 North 17th Street, Suite 1847, Rosslyn, VA 22209

First Edition
October 1998

Copyright National Electrical Manufacturers Association
Provided by IHS under license with NEMA
No reproduction or networking permitted without license from IHS
Not for Resale

ANSI C78.1p-1998
Supplement to ANSI C78.1-1991 (R1996)

American National Standard

Approval of an American National Standard requires verification by ANSI that the requirements for due process, consensus, and other criteria for approval have been met by the standards developer. An American National Standard implies a consensus of those substantially concerned with its scope and provisions. Consensus is established when, in the judgment of the ANSI Board of Standards Review, substantial agreement has been reached by directly and materially affected interests. Substantial agreement means much more than a simple majority, but not necessarily unanimity. Consensus requires that all views and objections be considered, and that a concerted effort be made toward their resolution. The existence of an American National Standard does not in any respect preclude anyone, whether he has approved the standard or not, from manufacturing, marketing, purchasing, or using products, processes, or procedures not conforming to the standards. It is intended as a guide to aid the manufacturer, the consumer, and the general public.

The American National Standards Institute does not develop standards and will in no circumstances give an interpretation of any American National Standard. Moreover, no person shall have the right or authority to issue an interpretation of an American National Standard in the name of the American National Standards Institute. Requests for interpretations should be addressed to the Committee Secretariat referred to on the title page.

CAUTION NOTICE: This American National Standard may be revised or withdrawn at any time. The procedures of the American National Standards Institute require that action be taken periodically to reaffirm, revise, or withdraw this standard. Purchasers of American National Standards may receive current information on all standards by calling or writing the American National Standards Institute.

Published by

National Electrical Manufacturers Association

No part of this publication may be reproduced in any form, in an electronic retrieval system or otherwise, without prior written permission of the publisher.

Printed in the United States of America

Copyright © 1998 by National Electrical Manufacturers Association
1300 North 17th Street, Suite 1847, Rosslyn, VA 22209

First Edition
October 1998

Copyright National Electrical Manufacturers Association
Provided by IHS under license with NEMA
No reproduction or networking permitted without license from IHS
Not for Resale

STD.ANSI C78.1-ENGL 1991 ■ 0724150 0557568 0TT ■

ANSI C78.1n-1998
Supplement to ANSI C78.1-1991 (R1996)

American National Standard

Approved March 19, 1998 Secretariat: National Electrical Manufacturers Association

for electric lamps:

25-Watt, 36 Inch, T12, Rapid-Start Fluorescent Lamp

An American National Standard implies a consensus of those substantially concerned with its scope and provisions. It is intended as a guide to aid the manufacturer, the consumer, and the general public. The existence of an American National Standard does not in any respect preclude anyone, whether he has approved the standard or not, from manufacturing, marketing, purchasing, or using products, processes, or procedures not conforming to the standards. Users are cautioned to obtain the latest editions.
The American National Standards Institute does not develop standards and will in no circumstances give an interpretation of any American National Standard. Moreover, no person shall have the right or authority to issue an interpretation of an American National Standard in the name of the American National Standards Institute.
CAUTION NOTICE: This American National Standard may be revised or withdrawn at any time. The procedures of the American National Standards Institute require that action be taken periodically to reaffirm, revise, or withdraw this standard. Purchasers of American National Standards may receive current information on all standards by calling or writing the American National Standards Institute.

Copyright © 1998 by National Electrical Manufacturers Association
1300 North 17th Street, Suite 1847, Rosslyn, VA 22209

First Edition
October 1998

Copyright National Electrical Manufacturers Association
Provided by IHS under license with NEMA
No reproduction or networking permitted without license from IHS
Not for Resale

ANSI C78.1n-1998
Supplement to ANSI C78.1-1991 (R1996)

American National Standard

Approval of an American National Standard requires verification by ANSI that the requirements for due process, consensus, and other criteria for approval have been met by the standards developer. An American National Standard implies a consensus of those substantially concerned with its scope and provisions. Consensus is established when, in the judgment of the ANSI Board of Standards Review, substantial agreement has been reached by directly and materially affected interests. Substantial agreement means much more than a simple majority, but not necessarily unanimity. Consensus requires that all views and objections be considered, and that a concerted effort be made toward their resolution. The existence of an American National Standard does not in any respect preclude anyone, whether he has approved the standard or not, from manufacturing, marketing, purchasing, or using products, processes, or procedures not conforming to the standards. It is intended as a guide to aid the manufacturer, the consumer, and the general public.

The American National Standards Institute does not develop standards and will in no circumstances give an interpretation of any American National Standard. Moreover, no person shall have the right or authority to issue an interpretation of an American National Standard in the name of the American National Standards Institute. Requests for interpretations should be addressed to the Committee Secretariat referred to on the title page.

CAUTION NOTICE: This American National Standard may be revised or withdrawn at any time. The procedures of the American National Standards Institute require that action be taken periodically to reaffirm, revise, or withdraw this standard. Purchasers of American National Standards may receive current information on all standards by calling or writing the American National Standards Institute.

Published by

National Electrical Manufacturers Association

No part of this publication may be reproduced in any form, in an electronic retrieval system or otherwise, without prior written permission of the publisher.

Printed in the United States of America

Copyright © 1998 by National Electrical Manufacturers Association
1300 North 17th Street, Suite 1847, Rosslyn, VA 22209

First Edition
October 1998

Copyright National Electrical Manufacturers Association
Provided by IHS under license with NEMA
No reproduction or networking permitted without license from IHS

Not for Resale

ANSI C78.1n-1998
Supplement to ANSI C78.1-1991 (R1996)

25-WATT 36-INCH, RAPID-START FLUORESCENT LAMP

This standard data sheet is fully compatible with IEC Publication 81.

Lamp Description

Lamp Abbreviation	25W/36T12/RS
Nominal Wattage	25 Watts
Nominal Overall Length	36 in. (900mm)
Bulb Designation	T12 (T38)
Base	G13 Medium bipin
Circuit Application	Rapid Start

Dimensional Characteristics (conditions of clause 10 apply)

	Inches		Millimeters	
	Min	Max	Min	Max
A. (Base face to base face)		35.22		894.6
B. (Base face to end of opposite base pin)	35.40	35.50	899.2	901.7
C. (End of base pin to end of opposite base pin)	35.67	35.78	906.0	908.8
D. (Bulb outside diameter)	1.41	1.59	35.8	40.4

Electrical Characteristics

Lamp Operating Characteristics (conditions of clause 11 apply)

Wattage	
Arc wattage (W)	24.5
Approximate cathode wattage (with 3.6V on each cathode) (W)	2.0
Total wattage (W)	26.5
Voltage (V)	62
Current (A)	0.455

Reference Ballast Characteristics

Rated input voltage (V)	180
Reference current (A)	0.430
Impedance (ohms)	335

Cathode Characteristics

Type	Low resistance
Resistance (at 3.6V)	
Objective (ohms)	9.6
Minimum (ohms)	7.0

Copyright © 1998 by National Electrical Manufacturers Association
1300 North 17th Street, Suite 1847, Rosslyn, VA 22209

First Edition
October 1998

Copyright National Electrical Manufacturers Association
Provided by IHS under license with NEMA
No reproduction or networking permitted without license from IHS
Not for Resale

Information for Ballast Design (conditions of clause 12 apply)
Lamp Starting Requirements

	Single Lamp	Ballasts for Two Lamps
Voltage between lamp terminals (Note 1)		
at 60°F (15°C) and above, (Vrms) min.	175	215
at 60°F (15°C) and above, (Vrms) max.	210	290
at 60°F (15°C) and above, (Vpeak) min.	280	300
Waveshape of starting voltage crest factor, maximum	2.0	2.0
Lamp current crest factor, max.	1.9	1.9
Starting capacitor size		
minimum (μF) (at 60 Hz)		0.04
maximum (μF) (at 60 Hz)		0.06

NOTES

1. These values are for lead circuits only.

Cathode Heat Requirements

Rapid Start

Voltage	3.6V nominal
Limits during operation	2.5V min., 4.0V max.
Dummy load resistor	9.6 ohms ± 0.1 ohms
Voltage across dummy load	3.4V min., 4.5V max.

Application Note: Single lamp ballasts designed to operate the 30W/36T12/RS lamp may or may not start the 25W/36T12/RS lamp.

Copyright © 1998 by National Electrical Manufacturers Association
1300 North 17th Street, Suite 1847, Rosslyn, VA 22209

First Edition
October 1998

Copyright National Electrical Manufacturers Association
Provided by IHS under license with NEMA
No reproduction or networking permitted without license from IHS
Not for Resale

ANSI C78.1m-1997
Supplement to ANSI C78.1-1991

American National Standard

Approved July 11, 1997 Secretariat: National Electrical Manufacturers Association

for electric lamps:

25-Watt, 48-Inch T12, Rapid-Start Fluorescent Lamp

An American National Standard implies a consensus of those substantially concerned with its scope and provisions. It is intended as a guide to aid the manufacturer, the consumer, and the general public. The existence of an American National Standard does not in any respect preclude anyone, whether he has approved the standard or not, from manufacturing, marketing, purchasing, or using products, processes, or procedures not conforming to the standards. Users are cautioned to obtain the latest editions.

The American National Standards Institute does not develop standards and will in no circumstances give an interpretation of any American National Standard. Moreover, no person shall have the right or authority to issue an interpretation of an American National Standard in the name of the American National Standards Institute.

CAUTION NOTICE: This American National Standard may be revised or withdrawn at any time. The procedures of the American National Standards Institute require that action be taken periodically to reaffirm, revise, or withdraw this standard. Purchasers of American National Standards may receive current information on all standards by calling or writing the American National Standards Institute.

Copyright © 1997 by National Electrical Manufacturers Association
1300 North 17th Street, Suite 1847, Rosslyn, VA 22209

First Edition
May 1997

Copyright National Electrical Manufacturers Association
Provided by IHS under license with NEMA
No reproduction or networking permitted without license from IHS
Not for Resale

ANSI C78.1m-1997
Supplement to ANSI C78.1-1991

American National Standard

Approval of an American National Standard requires verification by ANSI that the requirements for due process, consensus, and other criteria for approval have been met by the standards developer. An American National Standard implies a consensus of those substantially concerned with its scope and provisions. Consensus is established when, in the judgment of the ANSI Board of Standards Review, substantial agreement has been reached by directly and materially affected interests. Substantial agreement means much more than a simple majority, but not necessarily unanimity. Consensus requires that all views and objections be considered, and that a concerted effort be made toward their resolution. The existence of an American National Standard does not in any respect preclude anyone, whether he has approved the standard or not, from manufacturing, marketing, purchasing, or using products, processes, or procedures not conforming to the standards. It is intended as a guide to aid the manufacturer, the consumer, and the general public.

The American National Standards Institute does not develop standards and will in no circumstances give an interpretation of any American National Standard. Moreover, no person shall have the right or authority to issue an interpretation of an American National Standard in the name of the American National Standards Institute. Requests for interpretations should be addressed to the secretariat or sponsor whose name appears on this title page.

CAUTION NOTICE: This American National Standard may be revised or withdrawn at any time. The procedures of the American National Standards Institute require that action be taken periodically to reaffirm, revise, or withdraw this standard. Purchasers of American National Standards may receive current information on all standards by calling or writing the American National Standards Institute.

Published by

National Electrical Manufacturers Association

No part of this publication may be reproduced in any form, in an electronic retrieval system or otherwise, without prior written permission of the publisher.

Printed in the United States of America

Copyright © 1996 by National Electrical Manufacturers Association
1300 North 17th Street, Suite 1847, Rosslyn, VA 22209

First Edition
May 1997

Copyright National Electrical Manufacturers Association
Provided by IHS under license with NEMA
No reproduction or networking permitted without license from IHS
Not for Resale

25-Watt, 48-Inch T12, Rapid-Start Fluorescent Lamp

Lamp description

Lamp abbreviation 25W/48T12/RS
Nominal wattage ..... 25 watts
Nominal overall length ..... 48 in (1200 mm)
Bulb designation T12 (T38)
Base ..... G13, Medium bipin
Circuit application ..... Rapid start, Low power factor (Lag) Ballast (Shoplight)

Dimensional characteristics (definitions of Part II apply)

		Inches		Millimeters	
		Min	Max	Min	Max
A	(Base face to base face)	-	47.22	-	1199.4
B	(Base face to end of opposite base pin)	47.40	47.50	1204.0	1206.5
C	(End of base pin to end of opposite pin end)	47.67	47.78	1210.8	1213.6
D	(Bulb, outside diameter)	1.41	1.59	35.8	40.4

Electrical characteristics

Lamp operating characteristics (conditions of clause 11 apply)

Wattage
- Arc wattage (W) 24.5
- Approximately cathode wattage (With 3.6 V on each cathode) (W) 1.5
- Total wattage (W) 26.0

Voltage (V) 106
Current (A)) 0.250

Reference ballast characteristics

Rated input voltage (V) 300V
Reference current (A) 0.250
Impedance (ohms) 1,025

Cathode characteristics

Type ..... Rapid Start
Resistance (at 3.6 V)
- Objective (ohms) 11.5
- Minimum (ohms) 9.0

Copyright © 1997 by National Electrical Manufacturers Association
1300 North 17th Street, Suite 1847, Rosslyn, VA 22209

First Edition
May 1997

Copyright National Electrical Manufacturers Association
Provided by IHS under license with NEMA
No reproduction or networking permitted without license from IHS
Not for Resale

Lamp starting requirements

	Single lamp	Ballasts for two lamps	Ballasts for three lamps
Rapid Start			
Voltage between lamp terminals (Note 1)			
at 50°F (10°C) and above, (Vrms) min	200	256	395
at 50°F (10°C) and above, (Vrms) max	260	330	525
Voltage lamp terminal to starting aid (Note 2)			
At 50°F (10°C) and above, (Vpeak) min	240	240	280
Waveshape of starting voltage crest factor, max	2.0	2.0	2.0
Starting capacitor size			
minimum (µF) (at 60 Hz)	0.04		0.04
maximum (µF) (at 60 Hz)	0.06		0.06

Preheat (switch) start

Voltage between lamp terminals	
at 50°F (10°C) and above, (Vrms) min	176
at 50°F (10°C) and above, (Vrms) max	230
at 50°F (10°C) and above, (Vpeak) max	375
Voltage lamp terminal to ground (Vrms) max. (Note 3)	135

NOTES
1 These values are for lead circuits only. For lag circuits, add 3%.
2 These values are for crest factors of 1.55 to 2.0. Add 10% for crest factors less than 1.55.
3 Applies unless other means are provided to avoid instant starting.

Cathode heat requirements

Rapid start

Voltage	3.6 V nominal
Limits during operation	2.5 V min., 4.0 V max.
Dummy load resistor	11.5 ohms • 0.1 ohm
Voltage across dummy load	3.4 V min., 4.5 V max.

Preheat (switch) start

Current during preheat at rated primary voltage	0.40 A min., 0.65 A max.
Preheat time at 0.53 A preheat current	1.0 seconds min.

Application Note:
- This lamp is specifically designed for rapid start low power factor (Lag) ballasts.
- Use on other ballasts, such as rapid start high power factor F40T12 ballasts, may substantially reduce lamp life.
- Both the U.S. and Canadian federal governments are considering restrictions on the marketing and application of 48" (1200mm) T12 lamps rated at less than 28 watts.

Copyright © 1997 by National Electrical Manufacturers Association
1300 North 17th Street, Suite 1847, Rosslyn, VA 22209

First Edition
May 1997

Copyright National Electrical Manufacturers Association
Provided by IHS under license with NEMA
No reproduction or networking permitted without license from IHS
Not for Resale

STD·ANSI C78·1-ENGL 1991 ■ 0724150 0557578 T49 ■

ANSI C78.1k-1996
Supplement to ANSI C78.1-1991 (R1996)

American National Standard

Approved August 29, 1996 Secretariat: National Electrical Manufacturers Association

for electric lamps:

24-27-Watt, Single-Based Rapid-Start Fluorescent Lamp

An American National Standard implies a consensus of those substantially concerned with its scope and provisions. It is intended as a guide to aid the manufacturer, the consumer, and the general public. The existence of an American National Standard does not in any respect preclude anyone, whether he has approved the standard or not, from manufacturing, marketing, purchasing, or using products, processes, or procedures not conforming to the standards. Users are cautioned to obtain the latest editions.
The American National Standards Institute does not develop standards and will in no circumstances give an interpretation of any American National Standard. Moreover, no person shall have the right or authority to issue an interpretation of an American National Standard in the name of the American National Standards Institute.
CAUTION NOTICE: This American National Standard may be revised or withdrawn at any time. The procedures of the American National Standards Institute require that action be taken periodically to reaffirm, revise, or withdraw this standard. Purchasers of American National Standards may receive current information on all standards by calling or writing the American National Standards Institute.

Copyright © 1996 National Electrical Manufacturers Association
1300 North 17th Street, Suite 1847, Rosslyn, VA 22209

First Edition
November 1996

Copyright National Electrical Manufacturers Association
Provided by IHS under license with NEMA
No reproduction or networking permitted without license from IHS
Not for Resale

24-27-WATT, SINGLE-BASED RAPID-START FLUORESCENT LAMP

Lamp description

Lamp abbreviation 24-27W/13T5/T/2G11/PH-RS
Nominal wattage ..... 27 Watts for rapid start (24 watts for preheat)
Nominal overall length..... 12.8 inches (324mm)
Bulb
  Designation..... T5 (T16)
  Nominal diameter ..... .69 inches (17.5mm)
Base type 2G11
Circuit application..... Preheat (switch) start and rapid start

Dimensional characteristics (definitions of Part II apply)

	Lamp Dimensions (Note 1)				Lamp Outline Dimensions (Note 2)	
	Inches		Millimeters		Inches	Millimeters
Lamp Length	Min	Max	Min	Max	Max	Max
Base face to top of lamp (H)	–	12.60	–	320.0	12.60	320.0
Bulb depth (G)	0.67	0.70	17.1	17.8	0.98	25.0
Bulb width (C)	1.46	1.55	37.2	39.4	1.80	46.0

NOTES
1 Lamp dimensions C & G apply to glass only in mounting area along lamp legs.
2 Maximum outline dimensions include glass distortion and base/bulb misalignment.

Lamp holding requirements

An auxiliary bulb holding device is required due to the long length of this single-based lamp. No mounting support shall be placed on or very near the bent end of the lamp. The bulb-holding device shall be located between 9.5" (241mm) and 10.5" (267mm) from base face of lamp.

NOTES
1 A UV resistant non-metallic saddle type clip is the preferred method to support the lamp. Metallic clips may change the starting characteristics of high-frequency operation of the lamp.
2 A support placed between the legs of the lamp is not recommended. The inside leg dimension is not controlled and varies in production. The minimum spacing between the legs is 0.071 in (1.8mm).
3 The lamp should be used in lamp holders that conform to 2G11 standards sheet, ANSI C81.62.

Copyright National Electrical Manufacturers Association
Provided by IHS under license with NEMA
No reproduction or networking permitted without license from IHS
Not for Resale

Electrical characteristics

Electrical characteristics and light output may vary with ambient temperature.

Lamp operating characteristics (conditions of clause 11 apply)

Watts
- Arc watts (W) 23.6
- Approximate cathode watts (with 3.6V on each cathode) (W) 2.1

Total wattage 25.7
Volts (V) 87
Current (A) 0.335

The preceding lamp operating characteristics are based on horizontal operation in a rapid-start type circuit at an ambient temperature of 25°C (77°F) with a 60-Hz sinusoidal power supply and a reference ballast having the characteristics shown in the following section:

Reference ballast characteristics
- Rated input voltage (V) 236
- Reference current (A) 0.340
- Impedance (ohms) 605

The general requirements for reference ballasts are stated in American National Standard for Reference Ballasts for Fluorescent Lamps, ANSI C82.3.

Cathode characteristics
- Type ..... Low resistance
- Resistance (at 3.6V)
  - Objective (ohms) 9.6
  - Minimum (ohms) 7.0

Information for ballast design

(Conditions of clause 12 apply)

Copyright National Electrical Manufacturers Association
Provided by IHS under license with NEMA
No reproduction or networking permitted without license from IHS
Not for Resale

Lamp starting requirements

Rapid-start (starterless) circuits	Single-Lamp Ballasts	Ballasts for Two Lamps in Series
Voltage between lamp terminals		
at 50°F (10°C) and above, (Vrms) min	220	240
at 50°F (10°C) and above, (Vrms) max	285	310
Voltage lamp terminal to starting aid (Note 1)		
at 50°F (10°C) and above, (Vpeak) min	520	520
Voltage (OC) crest factor, min (@90% line)	1.80	1.75
Voltage (OC) crest factor, max	2.20	2.20
Starting capacitor size		
minimum (μF) (at 60 Hz)	–	0.04
maximum (μF) (at 60 Hz)	–	0.06

NOTE: These limits apply to the peak voltage between the lamp terminal delivering the highest voltage above ground and the grounded fixture. The starting aid surfaces shall extend the full length of the lamp (distance H), at least 1" (25 mm) wide for edge mounting of lamps and at least 1.5" (38 mm) for flat mounting of lamps. Maximum distance from bulb wall leg to starting aid is 1/2" (13 mm) for either edge mounting or flat mounting, as shown below:

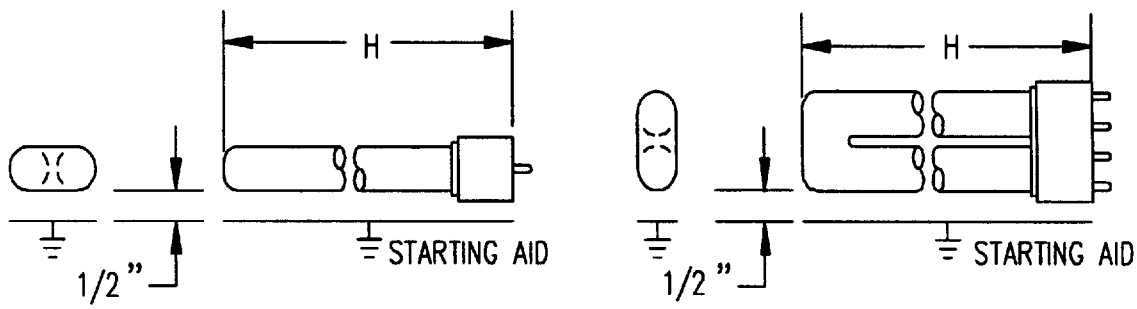

Copyright National Electrical Manufacturers Association
Provided by IHS under license with NEMA
No reproduction or networking permitted without license from IHS
Not for Resale

Cathode heat requirement at rated input voltage
- Voltage ..... 3.6 V nominal
- Limits during operation ..... 2.5 V min, 4.4 V max
- Dummy load resistor ..... 9.6 ohms ± 0.1 ohm
- Voltage across dummy load ..... 3.4 V min, 4.5 V max

For preheat (switch) start
- Voltage between lamp terminals
  - At 50°F (10°C) and above, (Vrms) min 198
  - At 50°F (10°C) and above, (Vpeak) max 400
- Preheat current
  - Minimum at 90% of rated line voltage, (A) 0.305
  - Maximum at 106% of rated line voltage, (A) 0.670
- Cathode heat requirements
  - Dummy load resistor, for both cathodes in series ..... 50 ohms

Information for luminaire design

(Conditions of clause 13 apply)

Copyright National Electrical Manufacturers Association
Provided by IHS under license with NEMA
No reproduction or networking permitted without license from IHS
Not for Resale

STD.ANSI C78.1-ENGL 1991 ■ 0724150 0557580 6T7 ■

ANSI C78.1j-1996
Supplement to ANSI C78.1-1991 (R1996)

American National Standard

Approved August 29, 1996 Secretariat: National Electrical Manufacturers Association

for electric lamps:

36-39-Watt, Single-Based Rapid-Start Fluorescent Lamp

An American National Standard implies a consensus of those substantially concerned with its scope and provisions. It is intended as a guide to aid the manufacturer, the consumer, and the general public. The existence of an American National Standard does not in any respect preclude anyone, whether he has approved the standard or not, from manufacturing, marketing, purchasing, or using products, processes, or procedures not conforming to the standards. Users are cautioned to obtain the latest editions.
The American National Standards Institute does not develop standards and will in no circumstances give an interpretation of any American National Standard. Moreover, no person shall have the right or authority to issue an interpretation of an American National Standard in the name of the American National Standards Institute.
CAUTION NOTICE: This American National Standard may be revised or withdrawn at any time. The procedures of the American National Standards Institute require that action be taken periodically to reaffirm, revise, or withdraw this standard. Purchasers of American National Standards may receive current information on all standards by calling or writing the American National Standards Institute.

Copyright © 1996 National Electrical Manufacturers Association
1300 North 17th Street, Suite 1847, Rosslyn, VA 22209

First Edition
November 1996

Copyright National Electrical Manufacturers Association
Provided by IHS under license with NEMA
No reproduction or networking permitted without license from IHS
Not for Resale

36–39-WATT, SINGLE-BASED RAPID-START FLUORESCENT LAMP

Lamp description

Lamp abbreviation 36-39W/16T5/T/2G11/PH-RS
Nominal wattage ..... 39 watts for rapid start (36 watts for preheat)
Nominal overall length..... 16.5 inches (419 mm)
Bulb
  Designation..... T5 (T16)
  Nominal diameter..... .69 inches (17.5 mm)
Base type 2G11
Circuit application..... Preheat (switch) start and rapid start

Dimensions characteristics (definitions of Part II apply)

	Lamp Dimensions (Note 1)				Lamp Outline Dimensions (Note 2)	
	Inches		Millimeters		Inches	Millimeter
Lamp Length	Min	Max	Min	Max	Max	Max
Base face to top of lamp (H)	–	16.34	–	415.0	16.34	415.0
Bulb depth (G)	067	0.70	17.1	17.8	0.98	25.0
Bulb width (C)	1.46	1.55	37.2	39.4	1.80	46.0

NOTES
1 Lamp Dimensions C & G apply to glass only in mounting area along lamp legs.
2 Maximum outline dimensions include glass distortion and base/bulb misalignment.

Lamp holding requirements

An auxiliary bulb holding device is required due to the long length of this single-based lamp. No mounting support shall be placed on or very near the bent end of the lamp. The bulb-holding device shall be located between 13.0" (330mm) and 14.0" (356mm) from base face of lamp.

NOTES
1 A UV resistant non-metallic saddle type clip is the preferred method to support the lamp. Metallic clips may change the starting characteristics of high-frequency operation of the lamp.
2 A support placed between the legs of the lamp is not recommended. The inside leg dimension is not controlled and varies in production. The minimum spacing between the legs is 1.8mm (0.071 in).
3 The lamp should be used in lamp holders that conform to 2G11 standards sheet, ANSI C81.62.

Electrical characteristics

Electrical characteristics and light output may vary with ambient temperature.

Copyright National Electrical Manufacturers Association
Provided by IHS under license with NEMA
No reproduction or networking permitted without license from IHS
Not for Resale

Lamp operating characteristics

(Conditions of clause 11 apply)

Wattage
- Arc Wattage (W) 35.9
- Approximate cathode watts (with 3.6V on each cathode) (W) 2.2

Total wattage 38.1
Voltage (V) 107
Current (A) 0.428

The preceding lamp operating characteristics are based on horizontal operation in a rapid-start type circuit at an ambient temperature of 25°C (77°F) with a 60-Hz sinusoidal power supply and a reference ballast having the characteristics shown in the following section:

Reference Ballast Characteristics
- Rated input voltage (V) 236
- Reference Current (A) 0.430
- Impedance (ohms) 439

The general requirements for reference ballasts are stated in American National Standard for Reference Ballasts for Fluorescent Lamps, ANSI C82.3.

Cathode Characteristics
- Type ..... Low resistance
- Resistance (at 3.6V)
  - Objective (ohms) 9.6
  - Minimum (ohms) 7.0

Information for ballast design

(Conditions of clause 12 apply)

Copyright National Electrical Manufacturers Association
Provided by IHS under license with NEMA
No reproduction or networking permitted without license from IHS
Not for Resale

Lamp starting requirements

For Rapid-Start (Starterless) circuits	Single-Lamp Ballasts	Ballasts for Two Lamps in Series
Voltage between lamp terminals		
at 50°F (10°C) and above, (Vrms) min	230	300
at 50°F (10°C) and above, (Vrms) max	300	390
Voltage lamp terminal to starting aid (Note 1)		
at 50°F (10°C) and above, (Vpeak) min	520	520
Voltage (OC) crest factor, min (@90% line)	1.80	1.60
Voltage (OC) crest factor, max	2.2	2.2
Starting capacitor size		
minimum (μF) (at 60 Hz)	–	0.04
maximum (μF) (at 60 Hz)	–	0.06

NOTE: These limits apply to the peak voltage between the lamp terminal delivering the highest voltage above ground and the grounded fixture. The starting aid surfaces shall extend the full length of the lamp (distance H), at least 1" (25 mm) wide for edge mounting of lamps and at least 1.5" (38 mm) for flat mounting of lamps. Maximum distance from bulb wall leg to starting aid is 1/2" (13 mm) for either edge mounting or flat mounting, as shown below:

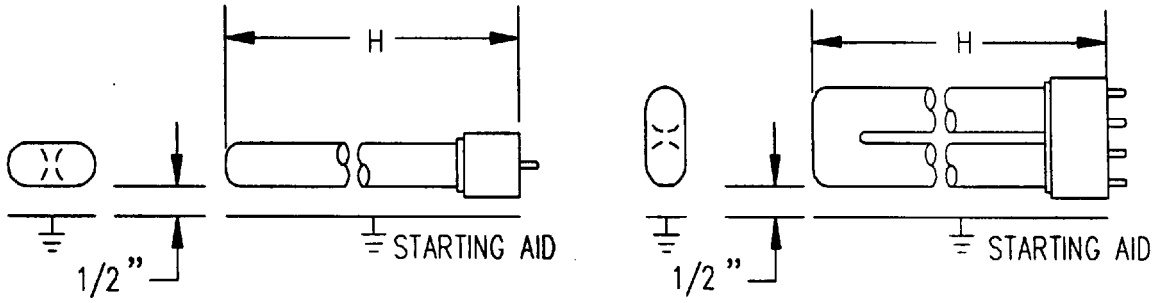

Copyright National Electrical Manufacturers Association
Provided by IHS under license with NEMA
No reproduction or networking permitted without license from IHS
Not for Resale

Cathode heat requirements at rated input voltage
- *Voltage* ..... 3.6 V nominal
- Limits during operation ..... 2.5 V min, 4.4 V max
- Dummy load resistor ..... 9.6 ohms ± 0.1 ohm
- Voltage across dummy load ..... 3.4 V min, 4.5 V max

For preheat (switch) start
- Voltage between lamp terminals
  - at 50°F (10°C) and above, (Vrms) min 198
  - at 50°F (10°C) and above, (Vpeak) max 400
- Preheat current
  - Minimum at 90% of rated line voltage, (A) 0.365
  - Maximum at 106% of rated line voltage, (A)..... 0.775
- Cathode heat requirements
  - Dummy load resistor, for both cathodes in series... 40 ohms

Information for luminaire design

(Conditions of clause 13 apply)

Copyright National Electrical Manufacturers Association
Provided by IHS under license with NEMA
No reproduction or networking permitted without license from IHS
Not for Resale

ANSI C78.1h-1996
Supplement to ANSI C78.1-1991 (R1996)

American National Standard

Approved August 29, 1996 | Secretariat: National Electrical Manufacturers Association

for electric lamps:

40-Watt, Single-Based Rapid-Start Fluorescent Lamp

An American National Standard implies a consensus of those substantially concerned with its scope and provisions. It is intended as a guide to aid the manufacturer, the consumer, and the general public. The existence of an American National Standard does not in any respect preclude anyone, whether he has approved the standard or not, from manufacturing, marketing, purchasing, or using products, processes, or procedures not conforming to the standards. Users are cautioned to obtain the latest editions.
The American National Standards Institute does not develop standards and will in no circumstances give an interpretation of any American National Standard. Moreover, no person shall have the right or authority to issue an interpretation of an American National Standard in the name of the American National Standards Institute.
CAUTION NOTICE: This American National Standard may be revised or withdrawn at any time. The procedures of the American National Standards Institute require that action be taken periodically to reaffirm, revise, or withdraw this standard. Purchasers of American National Standards may receive current information on all standards by calling or writing the American National Standards Institute.

Copyright © 1996 by National Electrical Manufacturers Association
1300 North 17th Street, Suite 1847, Rosslyn, VA 22209

First Edition
November 1996

Copyright National Electrical Manufacturers Association
Provided by IHS under license with NEMA
No reproduction or networking permitted without license from IHS

Not for Resale

ANSI C78.1h-1996
Supplement to ANSI C78.1-1991 (R1996)

Copyright © 1996 by National Electrical Manufacturers Association
1300 North 17th Street, Suite 1847, Rosslyn, VA 22209

First Edition
November 1996

Copyright National Electrical Manufacturers Association
Provided by IHS under license with NEMA
No reproduction or networking permitted without license from IHS

Not for Resale

40-WATT, SINGLE-BASED RAPID-START FLUORESCENT LAMP

Lamp description

Lamp abbreviation 40W/22T5/T/2G11/RS
Nominal wattage 40
Nominal overall length..... 22.4 inches (570mm)
Bulb
  Designation..... T5 (T16)
  Nominal diameter ..... .69 inches (17.5mm)
Base type 2G11
Circuit application..... Rapid Start

Dimensional characteristics (definitions of Part II apply)

	Lamp Dimensions (Note 1)				Lamp Outline Dimensions (Note 2)	
	Inches		Millimeters		Inches	Millimeters
Lamp Length	Min	Max	Min	Max	Max	Max
Base face to top of lamp (H)	–	22.30	–	566.4	22.30	566.4
Bulb depth (G)	0.67	0.70	17.1	17.8	0.98	25.0
Bulb width (C)	1.46	1.55	37.2	39.4	1.80	46.0

NOTES
1 Lamp dimensions C & G apply to glass only in mounting area along lamp legs.
2 Maximum outline dimensions include glass distortion and base/bulb misalignment.

Lamp holding requirements

An auxiliary bulb holding device is required due to the long length of this single-based lamp. No mounting support shall be placed on or very near the bent end of the lamp. The bulb-holding device shall be located between 18.0" (457mm) and 20.0" (508mm) from base face of lamp.

NOTES
1 A UV resistant non-metallic saddle type clip is the preferred method to support the lamp. Metallic clips may change the starting characteristics of high-frequency operation of the lamp.
2 A support placed between the legs of the lamp is not recommended. The inside leg dimension is not controlled and varies in production. The minimum spacing between the legs is 0.71 in (1.8mm).
3 The lamp should be used in lamp holders that conform to 2G11 standards sheet, ANSI C81.62.

Electrical characteristics

Electrical characteristics and light output may vary with ambient temperature.

Copyright © 1996 National Electrical Manufacturers Association
1300 North 17th Street, Suite 1847, Rosslyn, VA 22209

Copyright National Electrical Manufacturers Association
Provided by IHS under license with NEMA
No reproduction or networking permitted without license from IHS
Not for Resale

Lamp operating characteristics

(Conditions of clause 11 apply)

Wattage
- Arc Watts (W) 36.7
- Approximate cathode watts (with 3.6V on each cathode) (W) 2.2

Total wattage..... 38.9 W
Voltage (V)..... 169.0
Current (A)..... 0.270

The preceding lamp operating characteristics are based on horizontal operation in a rapid-start type circuit at an ambient temperature of 25°C (77°F) with a 60-Hz sinusoidal power supply and a reference ballast having the characteristics shown in the following section:

Reference Ballast Characteristics
- Rated input voltage (V)..... 400
- Reference Current (A)..... 0.270
- Impedance (ohms)..... 1240

The general requirements for reference ballasts are stated in American National Standard for Reference Ballasts for Fluorescent Lamps, ANSI C82.3.

Cathode Characteristics
- Type .....Low resistance
- Resistance (at 3.6V)
  - Objective (ohms).....9.6
  - Minimum (ohms).....7.0

Information for ballast design

(Conditions of clause 12 apply)

Copyright © 1996 National Electrical Manufacturers Association
1300 North 17th Street, Suite 1847, Rosslyn, VA 22209
First Edition
November 1996

Copyright National Electrical Manufacturers Association
Provided by IHS under license with NEMA
No reproduction or networking permitted without license from IHS
Not for Resale

Lamp starting requirements

Rapid-Start (Starterless) Circuits	Single-Lamp Ballasts	Ballasts for Two Lamps in Series
Voltage between lamp terminals		
at 50°F (10°C) and above, (Vrms) min	275	400
at 50°F (10°C) and above, (Vrms) max	355	520
Voltage lamp terminal to starting aid (Note 1)		
at 50°F (10°C) and above, (Vpeak) min	520	520
Voltage (OC) crest factor, min (@90% line)	1.60	1.65
Voltage (OC) crest factor, max	2.20	2.20
Starting capacitor size		
minimum (μF) (at 60 Hz)	–	0.04
maximum (μF) (at 60 Hz)	–	0.06

NOTE: These limits apply to the peak voltage between the lamp terminal delivering the highest voltage above ground and the grounded fixture. The starting aid surfaces shall extend the full length of the lamp (distance H), at least 1" (25 mm) wide for edge mounting of lamps and at least 1.5" (38 mm) for flat mounting of lamps. Maximum distance from bulb wall leg to starting aid is 1/2" (13 mm) for either edge mounting or flat mounting, as shown below:

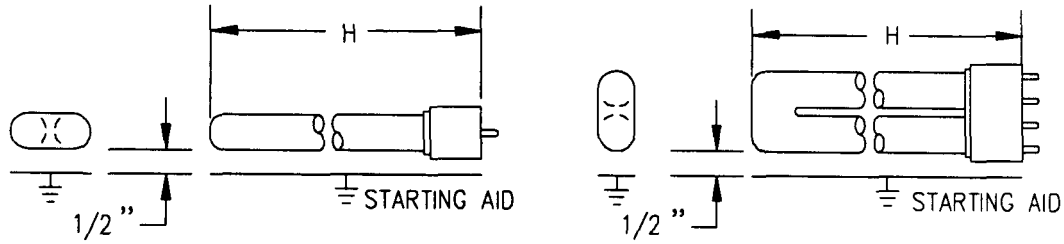

Copyright © 1996 National Electrical Manufacturers Association
1300 North 17th Street, Suite 1847, Rosslyn, VA 22209

Copyright National Electrical Manufacturers Association
Provided by IHS under license with NEMA
No reproduction or networking permitted without license from IHS
Not for Resale

Cathode Heat Requirement at rated input voltage

Voltage	3.6 V nominal
Limits during operation	2.5 V min, 4.4 V max
Dummy load resistor	9.6 ohms ± 0.1 ohm
Voltage across dummy load	3.4 V min, 4.5 V max

Information for luminaire design

(conditions of clause 13 apply)

Copyright © 1996 National Electrical Manufacturers Association
1300 North 17th Street, Suite 1847, Rosslyn, VA 22209
First Edition
November 1996

Copyright National Electrical Manufacturers Association
Provided by IHS under license with NEMA
No reproduction or networking permitted without license from IHS
Not for Resale

STD.ANSI C78.1-ENGL 1991 0724150 0557582 47T

ANSI C78.1g-1996
Supplement to ANSI C78.1-1991 (R1996)

American National Standard

Approved August 29, 1996 Secretariat: National Electrical Manufacturers Association

for electric lamps:

50-Watt, Single-Based Rapid-Start Fluorescent Lamp

An American National Standard implies a consensus of those substantially concerned with its scope and provisions. It is intended as a guide to aid the manufacturer, the consumer, and the general public. The existence of an American National Standard does not in any respect preclude anyone, whether he has approved the standard or not, from manufacturing, marketing, purchasing, or using products, processes, or procedures not conforming to the standards. Users are cautioned to obtain the latest editions.
The American National Standards Institute does not develop standards and will in no circumstances give an interpretation of any American National Standard. Moreover, no person shall have the right or authority to issue an interpretation of an American National Standard in the name of the American National Standards Institute.
CAUTION NOTICE: This American National Standard may be revised or withdrawn at any time. The procedures of the American National Standards Institute require that action be taken periodically to reaffirm, revise, or withdraw this standard. Purchasers of American National Standards may receive current information on all standards by calling or writing the American National Standards Institute.

Copyright © 1996 by National Electrical Manufacturers Association
1300 North 17th Street, Suite 1847, Rosslyn, VA 22209

First Edition
November 1996

Copyright National Electrical Manufacturers Association
Provided by IHS under license with NEMA
No reproduction or networking permitted without license from IHS
Not for Resale

50-WATT, SINGLE-BASED RAPID-START FLUORESCENT LAMP

Lamp description

Lamp abbreviation 50W/22T5/T/2G11/RS
Nominal wattage ..... 50 watts
Nominal overall length..... 22.4 in (570 mm)
Bulb designation..... T5 (T16)
Base 2G11
Circuit application..... Rapid start

Dimensions characteristics (definitions of Part II apply)

	Finished Lamp Dimensions (Note 1)				Lamp Outline Dimensions (Note 2)	
	Inches		Millimeters		Inches	Millimeters
Lamp Length	Min	Max	Min	Max	Max	Max
Base face to top of lamp (H)	–	22.30	–	566.4	22.30	566.4
Bulb depth (G)	.67	.70	17.1	17.8	0.98	25.0
Bulb width (C)	1.46	1.55	37.2	39.4	1.80	46.0

NOTES
1 Lamp dimensions C & G apply to glass only in mounting area along lamp legs.
2 Maximum outline dimensions include glass distortion and base/bulb misalignment.

Lamp holding requirements

An auxiliary bulb-holding device is required due to the length of this single-based lamp. No mounting support shall be placed on or very near the bent end of the lamp. The bulb-holding device shall be located between 18.0" (457mm) and 20.0" (508mm) from base face of lamp.

NOTES
1 A UV resistant non-metallic saddle type clip is the preferred method to support the lamp.
2 A support placed between the legs of the lamp is not recommended. The inside leg dimension is not controlled and varies in production. The minimum spacing between the legs is 1.8mm (0.071 in).
3 The lamp should be used in lamp holders that conform to 2G11 standards sheet, ANSI C81.62.

Copyright National Electrical Manufacturers Association
Provided by IHS under license with NEMA
No reproduction or networking permitted without license from IHS
Not for Resale

Electrical characteristics

Electrical characteristics and light output may vary with ambient temperature.

Lamp operating characteristics (conditions of clause 11 apply)

Wattage
- Arc wattage (W) 47.9
- Approximate cathode wattage (with 3.6V on each cathode) (W) 2.1
- Total wattage 50.0

Voltage (V) 147
Current (A) 0.430

The preceding lamp operating characteristics are based on horizontal operation in a rapid-start type circuit at an ambient temperature of 25°C (77°F) with a 60-Hz sinusoidal power supply and a reference ballast having the characteristics shown in the following section:

Reference Ballast Characteristics
- Rated input voltage (V) 400
- Reference current (A) 0.430
- Impedance (ohms) 800

The general requirements for reference ballasts are stated in American National Standard for Reference Ballasts for Fluorescent Lamps, ANSI C82.3.

Cathode characteristics
- Type ..... Low resistance
- Resistance (at 3.6V)
  - Objective ..... 9.6 ohms
  - Minimum ..... 7.0 ohms

Information for ballast design

(conditions of clause 12 apply)

Copyright National Electrical Manufacturers Association
Provided by IHS under license with NEMA
No reproduction or networking permitted without license from IHS
Not for Resale

Lamp starting requirements

	Single-Lamp Ballasts	Ballasts for Two Lamps in Series
Voltage between lamp terminals		
at 50°F (10°C) and above, (Vrms) min	275	400
at 50°F (10°C) and above, (Vrms) max	355	520
Voltage lamp terminal to starting aid (Note 1)		
at 50°F (10°C) and above, (Vpeak) min	520	520
Voltage (OC) crest factor, min (@90% line)	1.60	1.65
Voltage (OC) crest factor, max	2.2	2.2
Starting capacitor size		
minimum (μF) (at 60 Hz)	–	0.04
maximum (μF) (at 60 Hz)	–	0.06

NOTE: These limits apply to the peak voltage between the lamp terminal delivering the highest voltage above ground and the grounded fixture. The starting aid surfaces shall extend the full length of the lamp (distance H), at least 1" (25 mm) wide for edge mounting of lamps and at least 1.5" (38 mm) for flat mounting of lamps. Maximum distance from bulb wall leg to starting aid is 1/2" (13 mm) for either edge mounting or flat mounting, as shown below:

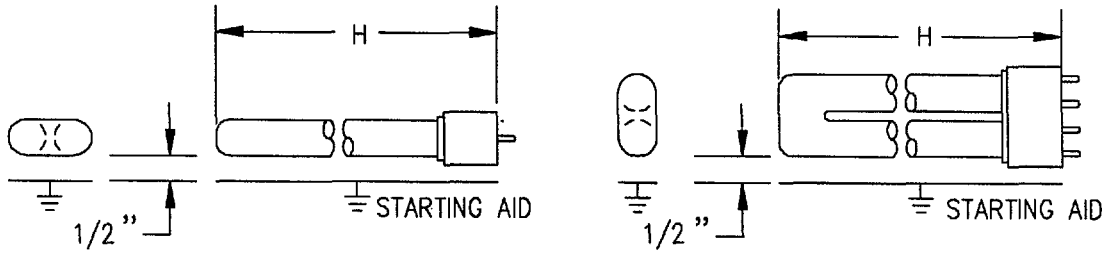

Cathode requirements

Rapid start

Voltage	3.6 V nominal
Limits during operation	2.5 V min, 4.4 V max
Dummy load resistor	9.6 ohms ± 0.1 ohm
Voltage across dummy load	3.4 V min, 4.5 V max

Copyright National Electrical Manufacturers Association
Provided by IHS under license with NEMA
No reproduction or networking permitted without license from IHS
Not for Resale

STD.ANSI C78.1-ENGL 1991 ■ 0724150 0557587 T51 ■

ANSI C78.1f-1996
Supplement to ANSI C78.1-1991 (R1996)

American National Standard

Approved August 29, 1996 Secretariat: National Electrical Manufacturers Association

for electric lamps:

32-Watt, U-Shaped, 6-Inch Center T8,Rapid-Start Fluorescent Lamp

An American National Standard implies a consensus of those substantially concerned with its scope and provisions. It is intended as a guide to aid the manufacturer, the consumer, and the general public. The existence of an American National Standard does not in any respect preclude anyone, whether he has approved the standard or not, from manufacturing, marketing, purchasing, or using products, processes, or procedures not conforming to the standards. Users are cautioned to obtain the latest editions.
The American National Standards Institute does not develop standards and will in no circumstances give an interpretation of any American National Standard. Moreover, no person shall have the right or authority to issue an interpretation of an American National Standard in the name of the American National Standards Institute.
CAUTION NOTICE: This American National Standard may be revised or withdrawn at any time. The procedures of the American National Standards Institute require that action be taken periodically to reaffirm, revise, or withdraw this standard. Purchasers of American National Standards may receive current information on all standards by calling or writing the American National Standards Institute.

Copyright © 1996 by National Electrical Manufacturers Association
1300 North 17th Street, Suite 1847, Rosslyn, VA 22209

First Edition
November 1996

Copyright National Electrical Manufacturers Association
Provided by IHS under license with NEMA
No reproduction or networking permitted without license from IHS
Not for Resale

32-WATT, U-SHAPED, 6-INCH CENTER T8, RAPID-START FLUORESCENT LAMP

Lamp description

Lamp abbreviation 32W/23T8/U6/RS
Nominal Wattage ..... 32 watts
Nominal overall length..... 23 in (584 mm)
Bulb designation..... T8 (T25), U-shaped
Base..... 2G13-152
Circuit application..... Rapid start

Dimensional characteristics (definitions of Part II apply)

	Inches		Millimeters	
	Min	Max	Min	Max
A (Lamp legs, center to center, nominal)	6.0	6.0	152.0	152.0
B (Base face to lamp end)	22.25	22.60	565.2	574.0
C (Bulb diameter in bend)	0.89	1.15	22.6	29.2
D (Bulb diameter in legs)	0.94	1.10	23.9	27.9
E (Distance between legs)	4.70	–	119.4	–
F (Distance outside of legs)	–	7.10	–	180.3
G (Base face to beginning of dimension H)	1.0	–	25.4	–
H (Length over which dimensions D, E, and F apply)	16.0	–	406.4	–

Lamp legs shall be in the same plane over the unbent portion of the lamp; maximum deviation = 0.13 inch (3.3mm).

Electrical characteristics

Lamp operating characteristics (conditions of clause 11 apply)

Wattage
- Arc wattage (W) 30.5
- Approximate cathode wattage (with 3.6 V on each cathode)(W) 1.7
- Total wattage (W)..... 32.2

Voltage (V) 137
Current (A) 0.265

Reference ballast characteristics

Rated input voltage (V) 300
Reference current (A) 0.265
Impedance (ohms)..... 910

Copyright National Electrical Manufacturers Association
Provided by IHS under license with NEMA
No reproduction or networking permitted without license from IHS
Not for Resale

Cathode characteristics

Type — Low resistance

Resistance (at 3.6 V)
- Objective (ohms) 11.0
- Minimum (ohms) 8.0

Information for ballast design (conditions of clause 12 apply)

Lamp starting requirements

	Single lamp	Ballasts for two lamps in series	
		Option A	Option B
Voltage between lamp terminal (Note 1)			
at 50°F (10°C) and above, (Vrms) min.	200	300	315
Voltage lamp terminal to starting aid (Note 2)			
at 60°F (15°C) and above, (V peak) min.	260	260	260
at 50°F (10°C) and above, (V peak) min.	290	290	290
Waveshaping of starting voltage			
crest factor max.	2.0	2.0	2.0
Starting capacitor size			
minimum (μF) (at 60 Hz)		0.08	0.04
maximum (μF) (at 60 Hz)		0.12	0.06

NOTES
1 These values are for lead circuits only. For lag circuits, the values are under consideration.
2 These values are for crest factors of 1.55 to 2.0. Add 20% for crest factors less than 1.55.

Cathode heat requirements

Rapid start

- Voltage ..... 3.6 V nominal
- Limits during operation ..... 2.5 V min, 4.4 V max
- Dummy load resistor ..... 11.0 ohms ± 0.1 ohms
- Voltage across dummy load ..... 3.4 V min, 4.5 V max

Ground plane spacing

The requirements of 13.2 apply. However, a space of up to 0.75 in (19mm) is allowed if the ground plane is at least 2 in (51mm) wide.

Copyright National Electrical Manufacturers Association
Provided by IHS under license with NEMA
No reproduction or networking permitted without license from IHS
Not for Resale

STD.ANSI C78.1-ENGL 1991 ■ 0724150 0557591 482 ■

ANSI C78.1e-1996
Supplement to ANSI C78.1-1991

American National Standard

Approved March 22, 1996 Secretariat: National Electrical Manufacturers Association

18-Watt, Single-based rapid-start fluorescent lamp

This standard sheet supercedes pages 2 through 5 of ANSI C78.1a-1992, referencing this lamp.

An American National Standard implies a consensus of those substantially concerned with its scope and provisions. It is intended as a guide to aid the manufacturer, the consumer, and the general public. The existence of an American National Standard does not in any respect preclude anyone, whether he has approved the standard or not, from manufacturing, marketing, purchasing, or using products, processes, or procedures not conforming to the standards.
The American National Standards Institute does not develop standards and will in no circumstances give an interpretation of any American National Standard. Moreover, no person shall have the right or authority to issue an interpretation of an American National Standard in the name of the American National Standards Institute. Requests for interpretations should be addressed to the secretariat or sponsor whose name appears on the title page of this standard.
CAUTION NOTICE: This American National Standard may be revised or withdrawn at any time. The procedures of the American National Standards Institute require that action be taken periodically to reaffirm, revise, or withdraw this standard. Purchasers of American National Standards may receive current information on all standards by calling or writing the American National Standards Institute.

Copyright © 1996 by National Electrical Manufacturers Association
1300 North 17th Street, Suite 1847, Rosslyn, VA 22209

Copyright National Electrical Manufacturers Association
Provided by IHS under license with NEMA
No reproduction or networking permitted without license from IHS Not for Resale

18-WATT, SINGLE-BASED RAPID-START FLUORESCENT LAMP

Lamp description

Lamp abbreviation 18W/10T5/T/2G11/RS
Nominal wattage ..... 18 Watts
Nominal overall length..... 10.4 inches (264mm)
Bulb
  Designation..... T5 (T16)
  Nominal diameter ..... 0.69 inches (17.5mm)
Base type 2G11
Circuit application..... Rapid start

Dimensional characteristics (definitions of Part II apply)

	Lamp Dimensions—Note 1				Lamp Outline Dimensions—Note 2	
	Inches		Millimeters		Inches	Millimeter
Lamp Length	Min	Max	Min	Max	Max	Max
Base face to top of lamp (H)	—	10.25	–	260.4	10.25	260.4
Bulb depth (G)	0.67	0.70	17.1	17.8	0.98	25.0
Bulb width (C)	1.46	1.55	37.2	39.4	1.80	46.0

NOTES
1 Lamp dimensions C & G apply to glass only in mounting area along lamp legs.
2 Maximum outline dimensions include glass distortion and base/bulb misalignment.

Lamp holding requirements

An auxiliary bulb holding device is required due to the long length of this single-based lamp. No mounting support shall be placed on or very near the bent end of the lamp. The bulb-holding device shall be located between 7.5 inches (190 mm) and 8.5 inches (216 mm) from base face of lamp.

NOTES
1 A UV resistant non-metallic saddle type clip is the preferred method to support the lamp. Metallic clips may change the starting characteristics of high-frequency operation of the lamp.
2 A support placed between the legs of the lamp is not recommended. The inside leg dimension is not controlled and varies in production. The minimum spacing between the legs is 1.8 mm (0.071 in.).
3 The lamp should be used in lamp holders that conform to 2G11 standards sheet, ANSI C81.62.

Copyright National Electrical Manufacturers Association
Provided by IHS under license with NEMA
No reproduction or networking permitted without license from IHS
Not for Resale

Electrical characteristics

Electrical characteristics and light output may vary with ambient temperature.

Lamp operating characteristics (conditions of clause 11 apply)

Watts
Arc watts (W) 16.0
Approximate cathode watts
(with 3.6V on each cathode) (W) 2.5

Total wattage..... 18.5
Volts (V) 78
Current (A) 0.246

The preceding lamp operating characteristics are based on horizontal operation in a rapid-start type circuit at an ambient temperature of 25°C (77°F) with a 60-Hz sinusoidal power supply and a reference ballast having the characteristics shown in the following section:

Reference ballast characteristics
Rated input voltage (V)..... 236
Reference current (A)..... 0.250
Impedance (ohms) 850
Frequency (Hz)..... 60

The general requirements for reference ballasts are stated in ANSI C82.3.

Cathode characteristics
Type Low resistance
Resistance (at 3.6V)
Objective (ohms)..... 9.6
Minimum (ohms) 7.0

Copyright National Electrical Manufacturers Association
Provided by IHS under license with NEMA
No reproduction or networking permitted without license from IHS
Not for Resale

Information for ballast design (conditions of clause 12 apply)
Lamp starting requirements

Rapid-start (starterless) circuits	Single-Lamp Ballasts	Ballasts for Two Lamps in Series
Voltage between lamp terminals		
at 50°F (10°C) and above, (Vrms) min.	210	210
at 50°F (10°C) and above, (Vrms) max.	270	270
Voltage lamp terminal to starting aid (Note 1)		
at 50°F (10°C) and above, (Vpeak) min	520	520
Voltage (OC) crest factor, min. (@90% line)	1.85	1.85
Voltage (OC) crest factor, max.	2.20	2.20
Starting capacitor size		
minimum (μF) (at 60 Hz)	—	0.04
maximum (μF) (at 60 Hz)	—	0.06

NOTE—These limits apply to the peak voltage between the lamp terminal delivering the highest voltage above ground and the grounded fixture. The starting aid surfaces shall extend the full length of the lamp (distance H), at least 1 inch (25 mm) wide for edge mounting of lamps and at least 1.5 inch (38 mm) for flat mounting of lamps. Maximum distance from bulb wall leg to starting aid is 1/2 inch (13 mm) for either edge mounting or flat mounting, as shown below:

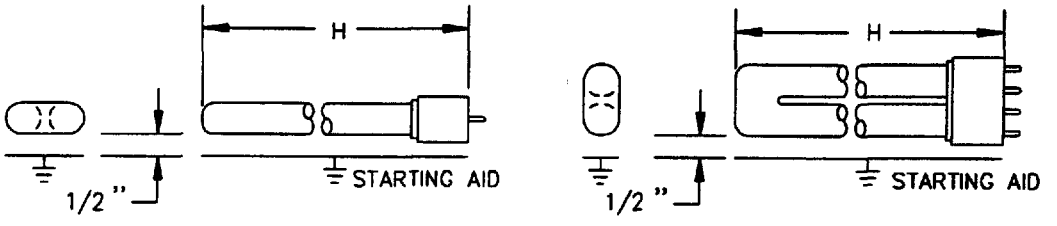

Cathode Heat Requirement at rated input voltage
- Voltage ..... 3.6 V nominal
- Limits during operation ..... 2.5 V min, 4.4 V max
- Dummy load resistor ..... 9.6 ohms ± 0.1 ohm
- Voltage across dummy load ..... 3.4 V min, 4.5 V max

Information for luminaire design (conditions of clause 13 apply)

Copyright National Electrical Manufacturers Association
Provided by IHS under license with NEMA
No reproduction or networking permitted without license from IHS
Not for Resale

Approved April 14, 1995 © Secretariat ASC C78: National Electrical Manufacturers Association

ANNEX A
(informative)

Guidelines for the Establishment of Wattage Ratings on Fluorescent Lamp Data Sheets

C1. Introduction

A typical ANSI lamp data sheet for a fluorescent lamp type shows values for both a wattage identification rating and a lamp operating characteristic wattage. While "rated wattage" is assigned for identification purposes, the "characteristic wattage" is a value used for the evaluation of results under specific measurement conditions. Since each has a separate purpose, there is no need for them to agree absolutely. However, wide disagreement could provoke questions and might be misleading to readers.

These guidelines should be applied to new lamp types being standardized. They are not to be applied retroactively.

C2. Purpose

The purpose of this appendix is to provide guidelines for the establishment of rated wattage identification of a fluorescent lamp data sheet, relative to its associated characteristic wattage value.

C3. Various Factors Affecting Rated Wattage

C3.1 Application Circuit

Early in the history of the development of fluorescent lamps, preheat, switch-start circuits were used exclusively. Later, rapid-start and instant-start circuits became important also. Presently, additional circuits such as modified rapid-start, high frequency switch-start, high frequency rapid-start, etcetera are coming into use.

Although a type of fluorescent lamp may be designed for operation on one specific circuit, that lamp may be later applied on another circuit(s). Therefore, one particular type of fluorescent lamp might be utilized on one of several different auxiliary circuits. The operating power dissipation of a lamp can be expected to vary depending on the circuit in which it is used.

Copyright National Electrical Manufacturers Association
Provided by IHS under license with NEMA
No reproduction or networking permitted without license from IHS
Not for Resale

An overly complicated situation would occur if a lamp's wattage rating reflected the operational results of several different circuits. The more straightforward, simplified approach is the assignment of one rated wattage value, regardless of various applications.

C3.2 Measurements of Lamp Characteristics on Reference Ballast

Measurements of fluorescent lamps have always been made on reference ballast circuits. Lamp characteristics, including characteristic wattage, are then specified on the lamp data sheet relative to the measurements on the specified reference ballast.

Switch-start reference circuits or rapid-start reference circuits are specified in various ANSI standards. The difference between them is that the latter incorporates continuous cathode heating. Numerically, for the same lamp type, this would amount to a wattage difference of less then 5%. Reference circuits for high frequency operation have not been fully developed yet. Where rapid-start lamp operating characteristics are given, both switch-start and rapid-start characteristics in reality are present. The terms used are arc wattage, which is analogous to operation on a switch-start reference ballast, and total wattage, which includes cathode wattage, and thus represent operation on a rapid-start reference ballast.

With the above two sets of lamp characteristics available, it is not always clear whether "arc wattage" or "total wattage" should be the basis for the "rated wattage".

C3.3 Hierarchy of Lamp Characteristics

When switch-start was the first application for a lamp, the rated wattage value would have been established in relation to that original switch-start data. Once established, no change would be made when new applications and additional reference ballast conditions were added. Any change in rating of a specific lamp would be confusing to consumers. Conversely, a lamp originally developed for use on rapid-start circuits would be assigned a rated wattage relative to lamp characteristics on the rapid-start reference ballast. A dilemma occurs, however, when both applications for the same lamp type have commercial importance.

In one sense, basing a lamp's rated wattage on switch-start specification can be misleading to customers who operate the lamp on a rapid-start circuit. The rating based on switch-start specifications is further removed from the actual power consumption for the rapid-start application. The reverse is true, also. Therefore, it will be beneficial to all if a fixed procedure for assignment of rated wattage is established so that uncertainties are eliminated.

Copyright National Electrical Manufacturers Association
Provided by IHS under license with NEMA
No reproduction or networking permitted without license from IHS
Not for Resale

C4. Procedure for Establishing Rated Wattage

C4.1 For lamp types intended only for application on rapid-start circuits, or where rapid-start is the only known application when the lamp data is first approved, the rated wattage shall be based on the rapid-start characteristic wattage (total wattage, including cathode heating wattage).

C4.2 For lamp types intended for use on more than one type of circuit, the rated wattage shall be based on the most commonly used commercial circuits.

C4.3 A rated wattage value may be rounded to the nearest appropriate value.

Copyright National Electrical Manufacturers Association
Provided by IHS under license with NEMA
No reproduction or networking permitted without license from IHS

Not for Resale

ANSI C78.1c-1994
Supplement to ANSI C78.1-1991

American National Standard

Approved November 14, 1994 Secretariat: National Electrical Manufacturers Association

34-Watt, U-Shaped, 6-Inch Center T12 Rapid-Start Fluorescent Lamp

An American National Standard implies a consensus of those substantially concerned with its scope and provisions. An American National Standard is intended as a guide to aid the manufacturer, the consumer, and the general public. The existence of an American National Standard does not in any respect preclude anyone,whether he has approved the standard or not, from manufacturing, marketing, purchasing, or using products, processes, or procedures not conforming to the standard. American National Standards are subject to periodic review and users are cautioned to obtain the latest editions.

The American National Standards Institute does not develop standards and will in no circumstances give an interpretation of any American National Standard. Moreover, no person shall have right or authority to issue an interpretation of an American National Standard in the name of the American National Standards Institute.

Caution Notice: This American National Standard may be revised or withdrawn at any time. The procedures of the American National Standards Institute require that action be taken to reaffirm, revise, or withdraw this standard no later than five years from the date of approval. Purchasers of American National Standards may receive current information on all standards by calling or writing the American National Standards Institute.

Copyright ©1995 by National Electrical Manufacturers Association, 2101 L Street, N.W., Washington, D.C. 20037

Copyright National Electrical Manufacturers Association
Provided by IHS under license with NEMA
No reproduction or networking permitted without license from IHS Not for Resale

34-Watt, U-Shaped, 6-Inch Center T12 Rapid-Start Fluorescent Lamp

Lamp Description

Lamp Abbreviation.....34W/23T12/U6/RS
Nominal Wattage.....34 Watts
Nominal overall length.....23 inches (584mm)
Bulb Designation.....T12(T38), U-Shaped
Base.....2G13-152
Circuit application.....Rapid start

Dimensional characteristics (definitions of Part II apply)

		Inches		Millimeters	
		Min.	Max.	Min.	Max.
A	Lamp legs, center to center, nominal	6	6	152	152
B	Base face to lamp end	22.25	22.60	565.2	574.0
C	Bulb diameter in bend	1.33	1.63	33.8	41.4
D	Bulb diameter in legs	1.41	1.59	35.8	40.4
E	Distance between legs	4.30	—	109.2	—
F	Distance to outside of legs	—	7.70	—	195.6
G	Base face to beginning of Dimension H	1.0	—	25.4	—
H	Length over which Dimensions D, E, and F apply	16.0	—	406.4	—

Lamp Legs shall be in the same plane over the unbent portion of the lamp maximum deviation = 0.13 in. (3.3mm).

Electrical Characteristics

Lamp Operating Characteristics (conditions of clause 11 apply)

Wattage
- Arc wattage (W).....31.5
- Approximate cathode wattage (with 3.6V on each cathode) (W).....2.0
- Total wattage (W).....33.5

Voltage (V).....78
Current (A).....0.460

Reference ballast characteristics

Rated input voltage (V).....236
Reference current (A).....0.430
Impedance (ohms).....439

Copyright National Electrical Manufacturers Association
Provided by IHS under license with NEMA
No reproduction or networking permitted without license from IHS
Not for Resale

Cathode characteristics

Type.....Low resistance
Resistance (at 3.6V)
Objective (ohms).....9.6
Minimum (ohms).....7.0

Information for ballasts design (conditions of clause 12 apply)

Lamp starting requirements

	Single lamp	Ballasts for two lamps
Voltage between lamp terminals (Note 1)		
At 60°F (15.5°C) and above, (Vrms) min.	200	256
At 60°F (15.5°C) and above, (Vrms) max.	260	330
At 60°F (15.5°C) and above, (Vpeak) min	315	380
Voltage lamp terminal to starting aid (Note 2)		
At 60°F (15.5°C) and above, (Vpeak) min.	280	240
Waveshape of starting voltage crest factor, maximum	2.0	2.0
Lamp current crest factor, max.	1.9	1.9
Starting capacitor size		
Minimum (μF) (at 60 Hz)		0.04
Maximum (μF) (at 60 Hz)		0.06

NOTES
1 These values are for lead circuits only. For lag circuits, add 3%.
2 These values are for crest factors of 1.55 to 2.0. Add 10% for crest factors less than 1.55.

Cathode heat requirements

Rapid Start
Voltage.....3.6V nominal
Limits during operation.....2.5V min., 4.0V max.
Dummy load resistor.....9.6 ohms ± 0.1 ohm
Voltage across dummy load.....3.4V min., 4.5V max.

Copyright National Electrical Manufacturers Association
Provided by IHS under license with NEMA
No reproduction or networking permitted without license from IHS
Not for Resale

ANSI C78.1a-1992
Supplement to ANSI C78.1-1991

American National Standard

for 18W, 24W, and 36W single ended *rapid-start fluourescent* lamps—specifications (supplement to ANSI C78.2-1991)

Approved August 6, 1992 | Secretariat: National Electrical Manufacturers Association

Contents

Lamp types — Page

18W/10T5/2G11/RS Rapid-start single ended fluorescent lamp 2

24-27W/13T5/T/2G11 Rapid-start single ended fluorescent lamp 6

36-39W/16T5/T/2G11 Rapid-start single ended fluorescent lamp 9

An American National Standard implies a consensus of those substantially concerned with its scope and provisions. An American National Standard is intended as a guide to aid the manufacturer, the consumer, and the general public. The existence of an American National Standard does not in any respect preclude anyone,whether he has approved the standard or not, from manufacturing, marketing, purchasing, or using products, processes, or procedures not conforming to the standard. American National Standards are subject to periodic review and users are cautioned to obtain the latest editions.

The American National Standards Institute does not develop standards and will in no circumstances give an interpretation of any American National Standard. Moreover, no person shall have right or authority to issue an interpretation of an American National Standard in the name of the American National Standards Institute.

Caution Notice: This American National Standard may be revised or withdrawn at any time. The procedures of the American National Standards Institute require that action be taken to reaffirm, revise, or withdraw this standard no later than five years from the date of approval. Purchasers of American National Standards may receive current information on all standards by calling or writing the American National Standards Institute.

Copyright ©1992 by National Electrical Manufacturers Association, 2101 L Street, N.W., Washington, D.C. 20037

Copyright National Electrical Manufacturers Association
Provided by IHS under license with NEMA
No reproduction or networking permitted without license from IHS
Not for Resale

ANSI C78.1 91 ■ 0724150 0501706 3 ■

American National Standard

for Fluorescent Lamps –

Rapid-Start Types – Dimensional and Electrical Characteristics

ANSI C78.1-1991

ANSI American National Standards Institute
11 West 42nd Street
New York, New York
10036

Copyright National Electrical Manufacturers Association
Provided by IHS under license with NEMA
No reproduction or networking permitted without license from IHS

Not for Resale

ANSI C78.1 91 ■ 0724150 0501707 5 ■

ANSI®
C78.1-1991
Revision and consolidation of
ANSI C78.1-1978, C78.1a-1980,
C78.1b-1985, C78.1c-1985,
C78.1d-1988

American National Standard
for Fluorescent Lamps –

Rapid-Start Types – Dimensional and Electrical Characteristics

Secretariat
National Electrical Manufacturers Association

Approved July 15, 1991
American National Standards Institute, Inc.

Copyright National Electrical Manufacturers Association
Provided by IHS under license with NEMA
No reproduction or networking permitted without license from IHS
Not for Resale

American National Standard

Approval of an American National Standard requires verification by ANSI that the requirements for due process, consensus, and other criteria for approval have been met by the standards developer.

Consensus is established when, in the judgment of the ANSI Board of Standards Review, substantial agreement has been reached by directly and materially affected interests. Substantial agreement means much more than a simple majority, but not necessarily unanimity. Consensus requires that all views and objections be considered, and that a concerted effort be made toward their resolution.

The use of American National Standards is completely voluntary; their existence does not in any respect preclude anyone, whether he has approved the standards or not, from manufacturing, marketing, purchasing, or using products, processes, or procedures not conforming to the standards.

The American National Standards Institute does not develop standards and will in no circumstances give an interpretation of any American National Standard. Moreover, no person shall have the right or authority to issue an interpretation of an American National Standard in the name of the American National Standards Institute. Requests for interpretations should be addressed to the secretariat or sponsor whose name appears on the title page of this standard.

CAUTION NOTICE: This American National Standard may be revised or withdrawn at any time. The procedures of the American National Standards Institute require that action be taken periodically to reaffirm, revise, or withdraw this standard. Purchasers of American National Standards may receive current information on all standards by calling or writing the American National Standards Institute.

Published by

American National Standards Institute
11 West 42nd Street, New York, New York 10036

Copyright © 1991 by the American National Standards Institute
All rights reserved.

No part of this publication may be reproduced in any form, in an electronic retrieval system or otherwise, without prior written permission of the publisher.

Printed in the United States of America

APS2.5C592/90

Copyright National Electrical Manufacturers Association
Provided by IHS under license with NEMA
No reproduction or networking permitted without license from IHS
Not for Resale

Contents

Page

Foreword....iii

Part I General information and requirements....1

Part II Principles of dimensioning....7

Part III Annexes....10

A Identification....10

B Former designations of C78 fluorescent lamp standards....13

C Bibliography....14

Part IV Lamp specification data sheets....15

16-Watt, U-Shaped, 1-5/8-Inch Center T8, Rapid-Start Fluorescent Lamp....16

17-Watt, 24-Inch T8, Rapid-Start Fluorescent Lamp....18

20-Watt, 6-Inch Circular T9, Rapid-Start Fluorescent Lamp*....20

22-Watt, 8-Inch Circular T9, Rapid-Start Fluorescent Lamp*....22

24-Watt, U-Shaped, 1-5/8-Inch Center T8, Rapid-Start Fluorescent Lamp....24

25-Watt, 36-Inch T8, Rapid-Start Fluorescent Lamp....26

30-Watt, 36-Inch T12, Rapid-Start Fluorescent Lamp....28

31-Watt, U-Shaped, 1-5/8-Inch Center T8, Rapid-Start Fluorescent Lamp....30

32-Watt, 48-Inch T8, Rapid-Start Fluorescent Lamp....32

32-Watt, 12-Inch Circular T9, Rapid-Start Fluorescent Lamp*....34

32-Watt, 12-Inch Circular T10, Rapid-Start Fluorescent Lamp*....36

34-Watt, 48-Inch T12, Rapid-Start Fluorescent Lamp....38

37-Watt, 24-Inch T12, 0.800-Ampere, Rapid-Start Fluorescent Lamp....40

40-Watt, 60-Inch T8, Rapid-Start Fluorescent Lamp....42

40-Watt, 16-Inch Circular T9, Rapid-Start Fluorescent Lamp....44

40-Watt, 16-Inch Circular T10, Rapid-Start Fluorescent Lamp....46

40-Watt, 48-Inch T10, Rapid-Start Fluorescent Lamp*....48

40-Watt, T12, 1160-Millimeter, Rapid-Start Fluorescent Lamp....50

40-Watt, 48-Inch T12, Rapid-Start Fluorescent Lamp....52

40-Watt, U-Shaped, 3-5/8-Inch Center T12, Rapid-Start Fluorescent Lamp....54

40-Watt, U-Shaped, 6-Inch Center T12, Rapid-Start Fluorescent Lamp....56

50-Watt, 36-Inch T12, 0.800-Ampere, Rapid-Start Fluorescent Lamp....58

63-Watt, 48-Inch T12, 0.800-Ampere and 1.0-Ampere, Rapid-Start Fluorescent Lamp....60

75-Watt, 60-Inch T12, 0.800-Ampere, Rapid-Start Fluorescent Lamp....62

Copyright National Electrical Manufacturers Association
Provided by IHS under license with NEMA
No reproduction or networking permitted without license from IHS
Not for Resale

Page

87-Watt, 72-Inch T12, G20 Base, 0.800-Ampere and 1.0-Ampere, Rapid-Start Fluorescent Lamp.....64

87-Watt, 72-Inch T12, R17d base, 0.800-Ampere and 1.0-Ampere, Rapid-Start Fluorescent Lamp.....66

95-Watt, 96-Inch T12, 0.8-Ampere, Rapid-Start Fluorescent Lamp 68

100-Watt, 84-Inch T12, 0.800-Ampere, Rapid-Start Fluorescent Lamp 70

113-Watt, 96-Inch T12, 0.800-Ampere and 1.0-Ampere, Rapid-Start Fluorescent Lamp.....72

116-Watt, 48-Inch T12, 1.5-Ampere, Rapid-Start Fluorescent Lamp 74

116-Watt, 48-Inch PG17, 1.5-Ampere, Rapid-Start Fluorescent Lamp 76

168-Watt, 72-Inch T12, 1.5-Ampere, Rapid-Start Fluorescent Lamp 78

168-Watt, 72-Inch PG17, 1.5-Ampere, Rapid-Start Fluorescent Lamp 80

215-Watt, 96-Inch T12, 1.5-Ampere, Rapid-Start Fluorescent Lamp 82

215-Watt, 96-Inch PG17, 1.5-Ampere, Rapid-Start Fluorescent Lamp 84

*Dual circuit information provided.

Copyright National Electrical Manufacturers Association
Provided by IHS under license with NEMA
No reproduction or networking permitted without license from IHS
Not for Resale

Foreword (This foreword is not part of American National Standard C78.1-1991.)

This edition of ANSI C78.1 is technically and editorially revised to satisfy an overall objective of improved clarity. The technical changes involve incorporation of data from the supplements ANSI C78.1a-1980, C78.1b-1985, C78.1c-1985, C78.1d-1988, some additional ballast requirements, and the addition of certain details of ballast design that had been specified in line ballast standard, ANSI C82.1. A new family of lamps, T8 U-shaped lamps, is introduced herein. Editorially, this standard has been patterned after ANSI C78.40-1979 with more general information moved to Part I, allowing the data sheets in Part IV to became simplified. Also, each data sheet is now identified with a "lamp abbreviation" and Part II graphically defines lamp dimensions. As an aid to establishing lamp abbreviations for the data sheets in a consistent manner, guidelines have been provided in Annex A, in Part III.

Essentially, the same lamp types are covered as in the preceding edition. However, more effort has been imparted to identify with appropriate specifications, those lamps that can be operated on both rapid-start and preheat (switch)-start circuits. Prior to the publication of the 1978 edition, all of the standards for fluorescent lamps had been published as separate standards in the ANSI C78.700 series. Annex B now lists those old individual standards.

Suggestions for improvement of this standard will be welcome. They should be sent to the National Electrical Manufacturers Association, 2101 L Street, NW, Washington, DC 20006.

This standard was processed and approved for submittal to ANSI by Accredited Standards Committee on Electric Lamps, C78. Committee approval of this standard does not necessarily imply that all committee members voted for its approval. At the time it approved this standard, Committee C78 had the following members:

Ted A. Pickett, Chairman
Alfred C. Rousseau, Vice-Chairman
Vicki Schofield, Secretary

Organization Represented	*Name of Representative*
Advance Transformer Company	Norm Grimshaw
Duro-Test Corporation	Herbert S. Strauss
ETL Testing Laboratory	Anthony DiNiro
General Electric Company	Ted A. Pickett
GTE Products Corporation	Robert P. Bonazoli
	Kendrick D. Rattray (Alt.)
Illuminating Engineering Society	Melvin Unglert
	J. E. Kaufman (Alt.)
National Electrical Manufacturers Association	Harry R. Lobdell
	W. H. Hanshaw, Jr. (Alt.)
Philips Lighting Company	Alfred C. Rousseau
OSRAM Corporation	Peter A. Bleasby
Underwriters Laboratory	Kevin Kanakos
Valmont Electric	Dail Swanson
Wilger Liaison Company, Inc.	Gerald M. Plank, Jr.

Copyright National Electrical Manufacturers Association
Provided by IHS under license with NEMA
No reproduction or networking permitted without license from IHS
Not for Resale

American National Standard for Fluorescent Lamps –

Rapid-Start Types – Dimensional and Electrical Characteristics

Part I General Information and Requirements

1 Scope

This standard sets forth the physical and electrical characteristics of the principal types of fluorescent lamps intended for application on conventional rapid-start circuits or for dual circuit applications. Lamp data sheets for lamps with dual circuit applications show both rapid-start and preheat (switch)-start[1)] conditions. Specifications for both the lamp itself and the interactive features of lamp and ballast are given. Lamps of the regular linear shape as well as nonlinear shapes (Circular and U-shaped) are included. Self-supporting, single-ended compact lamps are not included.

Lamps designed primarily for operation on other types of circuits, such as preheat (switch)-start and instant-start, are specified in other lamp standards. See clause 3. Lamp data sheets have been generally placed in the standard that covers the original application for that lamp.

Lamps for conventional systems relying on auxiliary support from external ballasts are described. The lamps are those designed for 60-Hz operation.

Lamp color is not specified herein.

Certain lamp types covered in this standard may be similar to those in IEC Publication 81. However, additional types are included that are used only in North America and are not specified in the IEC standard.

2 General

There are four parts to this standard:

Part I contains general information and requirements applicable to rapid-start lamps and their operation. Detailed descriptions, references, and explanations for terms used in the lamp data sheets are given in this part.

Part II contains the drawings necessary to define the principles of dimensioning lamps.

Part III contains the annexes.

Part IV contains all of the lamp data sheets.

3 Normative references

The following standards contain provisions which, through reference in this text, constitute provisions of this American National Standard. At the time of publication, the editions indicated were valid. All standards are subject to revision, and parties to agreements based on this American National Standard are encouraged to investigate the possibility of applying the most recent editions of the standards indicated below.

1) The terms *switch start* and *preheat start* have been used interchangeably in various standards. Herein, they are considered to be equivalent as indicated by the term *preheat (switch)-start.*

Copyright National Electrical Manufacturers Association
Provided by IHS under license with NEMA
No reproduction or networking permitted without license from IHS
Not for Resale

ANSI C78.2-1991, *Fluorescent lamps – Preheat-start types – Dimensional and electrical characteristics*

ANSI C78.3-1991, *Fluorescent lamps – Instant-start and cold-cathode types – Dimensional and electrical characteristics*

ANSI C78.4, *Fluorescent lamps – Single-ended, self-supporting, contact types – Dimensional and electrical characteristics* [2)]

ANSI C78.5-1991, *Electric lamps – Fluorescent lamps – Performance guide*

ANSI C78.180-1972 (R1989), *Specifications for fluorescent lamp starters*

ANSI C78.375-1991, *Fluorescent lamps – Guide for electrical measurements*

ANSI C78.376-1969 (R1985), *Specifications for the chromacity of fluorescent lamps*

ANSI C79.1-1980 (R1984), *Nomenclature for glass bulbs intended for use with electric lamps*

ANSI C81.20-1976 (and supplements), *Specifications for electric lamp bases and holders – Fluorescent types* [3)]

ANSI C81.61-1990, *Electric lamp bases*

ANSI C81.63, *Gauges for electric lamp bases and lampholders* [2)]

ANSI C82.1-1985, *Ballasts for fluorescent lamps – Specifications*

ANSI C82.2-1984, *Fluorescent lamp ballasts – Methods of measurement*

ANSI C82.3-1983, *Reference ballasts for fluorescent lamps*

ANSI/IEEE 100-1988, *Dictionary of electrical and electronics terms*

4 Definitions

The definitions in this section relate to specific terms used in this standard.

For additional definitions, see the ballast standard (ANSI C82.1) and the electrical dictionary (ANSI/IEEE 100).

4.1 Lamps

4.1.1 fluorescent lamp: A low-pressure mercury electric discharge lamp in which a fluorescing coating transforms some of the ultraviolet energy, generated by the discharge, into light.

4.1.2 rapid-start fluorescent lamp: A fluorescent lamp designed to operate in a rapid-start circuit.

4.2 Lamp components

4.2.1 internal conductive coating: A coating that is made of a transparent conductive material and is applied to the inside of a fluorescent bulb, which acts as an aid to starting.

4.2.2 low-resistance cathode: A lamp cathode that exhibits a resistance in the range 2 to 15 ohms, when heated to nominal emission temperature.

4.2.3 high-resistance cathode: A lamp cathode that exhibits a resistance in the range above 15 ohms, when heated to nominal emission temperature.

4.3 Ballasts and circuit characteristics

4.3.1 fluorescent lamp ballast: A device that, by means of resistance, inductance, capacitance, or electronic elements, singly or in combination, controls the current, voltage, and waveform to the proper values for starting and operation of fluorescent lamps.

4.3.2 rapid-start circuit: That circuit in which hot-cathode electric discharge lamps are operated under the following conditions: (a) the lamps are started with the cathodes heated to a temperature sufficient for adequate electron emission and without establishing local ionization across the cathodes; (b) such heating is accompanied either by means of low-voltage heater windings in the ballast itself or by separate low-voltage transformers; (c) sufficient voltage is applied across the

---

2) This standard is currently under development. Contact the secretariat for more recent information.

3) All standard sheets for electric lamp bases that appeared in ANSI C81.20 and its supplements have been superseded by the publication of ANSI C81.61. All standard sheets for lampholders and gauges that appeared in ANSI C81.20 and its supplements are still in use, pending the publication of ANSI C81.62 (Lampholders) and ANSI C81.63 (Gauges). Contact the secretariat for more recent information.

Copyright National Electrical Manufacturers Association
Provided by IHS under license with NEMA
No reproduction or networking permitted without license from IHS
Not for Resale

lamp and between the lamp and the starting aid (usually the fixture itself) to initiate the discharge when the cathodes reach a temperature high enough for adequate emission; and (d) cathode heating voltage is maintained even after the lamp is in full operation. Two types of rapid-start circuits have evolved: (a) those for lamps with nominal 3.6-volt cathodes (low resistance) and (b) those for lamps with nominal 8.0-volt cathodes (high resistance). In some cases, the same lamp can be suitable for operation in either rapid-start or preheat switch)-start circuits.

4.3.3 preheat (switch)-start circuit: A circuit in which hot-cathode electric discharge lamps are started with the cathodes preheated through the use of a starting switch, either manual or automatic in its operation. The starting switch, when closed, connects the two cathodes, in series, in the ballast circuit so that current flows to heat the cathodes to emission temperature. When the switch is opened, a voltage surge is produced that initiates the discharge. Only the arc current flows through the cathodes after the lamp is in operation.

4.3.4 parallel cathode heating (preheating): A method of supplying cathode heating voltage from one ballast cathode heating winding to two lamp cathodes that are electrically connected in parallel with that winding.

4.3.5 crest factor: The ratio of the peak value of lamp current (or voltage) to the root-mean square (rms) value of lamp current (or voltage).

4.4 Miscellaneous

starting aid: A conductive ground plane reference, located parallel to a lamp. The voltage difference between a lamp's cathode and the plane aids in the initiation of the arc.

5 Lamp abbreviations

Lamp abbreviations for fluorescent lamps are not officially assigned through any administered designation system. Those used on the data sheets in Part IV are assigned in accordance with the guideline of annex A. There is no requirement for the use of abbreviations for lamp marking.

6 Methods of measurement

Electrical measurements necessary to determine the performance of lamps defined in this standard shall be made in accordance with the lamp measurements standard (ANSI C78.375).

7 Reference ballasts

Reference ballasts used for measurements of fluorescent lamps shall meet the general requirements set forth in the reference ballast standard (ANSI C82.3). It should be noted that the reference ballast standard requires a power factor of 0.075 + 0.005 for all fluorescent reference ballasts, unless otherwise specified on a lamp data sheet. Also, note that rapid-start reference ballasts called for in this standard include 3.6-V cathode heating.

8 Product drawings

The drawings included in Part II are product drawings that show the applications of the various coded dimensions that appear on the data sheets. Drawings are only needed to depict families of lamps; the particular values vary within a family in accordance with the values on the relevant lamp data sheet. No

Copyright © 1998 by National Electrical Manufacturers Association
1300 North 17th Street, Suite 1847, Rosslyn, VA 22209

Copyright National Electrical Manufacturers Association
Provided by IHS under license with NEMA
No reproduction or networking permitted without license from IHS
Not for Resale

attempt has been made to provide maximum outline drawings to show the space occupied by the lamps. They are not provided because the need for such has not been established.

9 Application of lamps on more than one type of circuit

The lamps specified in this standard are those designed specifically for operation in rapid-start circuits. However, lamp manufacturers may form an industry consensus approving the use of a particular lamp type on both rapid-start and preheat (switch)-start circuits. In such cases, the lamp data sheet will show the information for both of the appropriate circuits.

10 Lamp physical and dimensional requirements

10.1 Bulb specifications

Each lamp data sheet in Part IV specifies the necessary bulb shape and tube diameter. Bulb shapes are defined in the bulb nomenclature standard (ANSI C79.1). Due to the long established practice of referring to the diameter of fluorescent lamp bulbs in eighth-of-an-inch units, this standard maintains that practice. For example, a 1-inch diameter bulb is called a T8 bulb. Metric diameters are shown in parentheses.

10.2 Base specifications

Bases on finished lamps shall comply with the standard sheets included in ANSI C81.61. Standard sheets for the gauges for checking bases are included in ANSI C81.20 and its supplements.

10.3 Lamp dimensions

10.3.1 Base alignment of finished lamps

Finished lamps shall comply with the dimensions specified on the relevant data sheet in Part IV. Graphical definitions of the dimensional code letters used on the data sheets are given in Part II.

10.3.2 Base alignment of lamps with G13 medium bipin bases

Both pins (excluding flanges) of the two bases of an assembled lamp shall pass simultaneously without binding through parallel slots, each 0.120 inch (3.05 mm) in width, suitably spaced longitudinally to receive the lamp.

10.3.3 Base alignment of lamps with R17d recessed double-contact bases

Both base bosses of an assembled lamp shall pass simultaneously without binding through parallel slots each 0.25 inch (6.35 mm) deep and 0.363 inch (9.22 mm) in width, suitably spaced longitudinally to receive the lamp with the bottoms of the slots against the boss ends.

10.3.4 Base alignment of U-shaped lamps with 2G13 bases

All four pins (excluding flanges) of an assembled lamp shall pass simultaneously, without binding, through a single slot 0.120 inch (3.05 mm) in width.

Copyright © 1998 by National Electrical Manufacturers Association
1300 North 17th Street, Suite 1847, Rosslyn, VA 22209
First Edition
March 1998

Copyright National Electrical Manufacturers Association
Provided by IHS under license with NEMA
No reproduction or networking permitted without license from IHS
Not for Resale

10.4 Color

Lamp colors are not specified in this standard. Lamp chromaticity is considered to be a variable within each particular type. Color coordinates of 40-watt, T12(T38) lamps for certain colors are defined in the chromaticity standard (ANSI C78.376).

11 Lamp electrical characteristics

11.1 Lamp operating characteristics

The values of lamp voltage, current, and wattage shown on the individual lamp data sheets in Part IV are rated values that apply after the lamps have been aged for 100 hours. These values were chosen by consensus to represent the industry average at the time of publication. No manufacturer's average wattage shall exceed the rated value by more than 5% plus 0.5 watts. Fluorescent lamp operating characteristics are based on operation with a 60-Hz sinusoidal power supply and a reference ballast (with cathode heating for rapid start characteristics) having the characteristics shown on the appropriate lamp data sheet and at an ambient temperature of 25°C. Electrical characteristics and light output vary with ambient temperature.

Electrical measurements shall be made in accordance with ANSI C78.375.

11.2 Lamp starting requirements

Lamps shall start at the minimum starting voltages, within the waveshape limitation, as specified on each lamp data sheet under Information for Ballast Design. Separate values apply for rapid or preheat (switch)-start operation. For preheat starting, a minimum Preheat Time is defined. This value is used for testing starters in accordance with ANSI C78.180.

Those starting voltage values are intended to provide reliable starting at the minimum ambient temperatures specified and above, up to a defined upper limit. Upper temperature limits depend upon ballast design and operating current as follows, unless otherwise specified on the lamp data sheets:

Lamp operating current	Ballast design	Upper temperature limit
<0.5 A	all	110°F (43.3°C)
>0.5 A	single lamp	110°F (43.3°C)
>0.5 A	2 or 3 lamp series	150°F (65.6°C)

Copyright © 1998 by National Electrical Manufacturers Association
1300 North 17th Street, Suite 1847, Rosslyn, VA 22209

Copyright National Electrical Manufacturers Association
Provided by IHS under license with NEMA
No reproduction or networking permitted without license from IHS
Not for Resale

At temperatures near the top of a range, however, initial starting will be secured, but not necessarily immediate restarting.

12 Requirements for ballast design

12.1 General

12.1.1 Ballasts for use with the lamps in this standard shall meet the general requirements for fluorescent lamp ballasts as stated in the ballast standard (ANSI C82.1).

12.1.2 A ballast intended for use with a particular lamp type shall provide the lamp starting, cathode heating, and operating values specified on the relevant lamp data sheet in Part IV as defined in 12.2, 12.3, and 12.4. Requirements for rapid and preheat (switch)-start ballasts are given in these subclauses. Other special requirements may be specified on a lamp data sheet.

12.2 Lamp starting requirements

A commercial ballast designed to be used with a particular lamp type shall provide, (a) the voltage between lamp terminals, (b) voltage from lamp terminal to starting aid, within (c) the waveshape limitation as specified on the appropriate lamp data sheet. The specified voltage limits shall be provided at any line voltage between 90% and 110% of the ballast's rated input voltage. Additional information for ballast design concerning waveshape of starting voltage and starting capacitor sizes are specified on particular lamp data sheets.

12.2.1 Voltage between lamp terminals

The limits shown on the appropriate lamp data sheets apply to the voltage to be supplied between those two lamp terminals that deliver the highest voltage. For series ballasts, the voltage is for two (or three) lamps in series.

12.2.2 Voltage from lamp terminal to starting aid

The limits shown on the lamp data sheets apply to the voltage to be supplied between a terminal (the one delivering the highest voltage) of each lamp and that part of the ballast that will be at a ground potential.

NOTE – Luminaires also must be at ground potential, see clause 13.

Copyright © 1998 by National Electrical Manufacturers Association
1300 North 17th Street, Suite 1847, Rosslyn, VA 22209

First Edition
May 1998

Copyright National Electrical Manufacturers Association
Provided by IHS under license with NEMA
No reproduction or networking permitted without license from IHS
Not for Resale

12.2.3 Waveshape of starting voltage

The maximum starting voltage crest factor value for all lamps in this standard is 2.0, unless otherwise specified on the lamp data sheet. This applies both to the voltage across the lamp and to the starting aid voltage, at 90-110% of rated ballast input voltage.

12.2.4 Starting capacitor

In a two-lamp series, rapid-start ballast, the capacitor shall shunt the lamp furthest from ground potential.
In a three-lamp series, rapid-start ballast, a capacitor shall shunt the two lamps farthest from ground potential. A second capacitor of the same size shall shunt the lamp furthest from ground. If the minimum peak voltage from the lamp terminal-to-starting aid exceeds the specified limit by 30% or more, the second capacitor may shunt either of the two shunted lamps. Appropriate capacitor sizes are specified on each lamp data sheet.

12.3 Cathode heating

12.3.1 For rapid-start circuits, the required cathode heating voltage is specified on each lamp data sheet Both starting (dummy load) and during operation limits are given. The specified voltage limits shall be provided at the ballast's rated input voltage, unless otherwise specified on the lamp data sheet. In addition, the appropriate value of the dummy load resistor is specified as an aid to ballast design. Where one ballast winding operates two cathodes in parallel, the dummy load should be half the value given.

12.3.2 For preheat (switch)-start circuits, requirements for cathode heating current during the preheating phase and the preheat time are given on the appropriate lamp data sheet.

12.4 Operating current waveshape

The waveshape of the lamp current supplied to a fluorescent lamp in a rapid-start or in a preheat (switch)-start circuit shall have a crest factor that does not exceed 1.70, unless otherwise specified on a lamp data sheet.

12.5 Frequency to be used for high frequency operated lamps

For lamps designed for operation on high frequency, the lamp data sheets prescribe a frequency range for the reference ballast and for the testing of lamps (starting, electrical and photometric characteristics). This frequency range has been chosen for ease of reproducing test results and is not intended to restrict the design of high frequency ballasts where, for practical reasons, a higher frequency may be appropriate.

Copyright © 1998 by National Electrical Manufacturers Association
1300 North 17th Street, Suite 1847, Rosslyn, VA 22209

Copyright National Electrical Manufacturers Association
Provided by IHS under license with NEMA
No reproduction or networking permitted without license from IHS
Not for Resale

13 Requirements for luminaire design

13.1 General

A luminaire intended for use with a particular lamp type shall provide the appropriate starting aid of 13.2, auxiliary supports if needed, and any specialized values that may appear on the relevant lamp data sheet in Part IV.

13.2 Starting aid

13.2.1 Operation of fluorescent lamps on a rapid-start circuit requires the presence of a grounded, conductive starting aid. This can be a conventional part of the luminaire. The starting aid shall be connected to electrical ground.

> **NOTE** – This requirement does not apply for lamps with internal starting aids. External starting aids are not necessary for operation of such lamps.

13.2.2 Unless otherwise specified on a lamp data sheet, the surface of the starting aid shall be of a width at least equal to the diameter of the lamp or a minimum of 1 in (25 mm) and extend essentially the full length of the lamp.

13.2.3 Unless otherwise specified on a lamp data sheet, distance from the lamp's bulb wall to the starting aid, as measured in a direction perpendicular to the surface of the starting aid, shall not be greater than the following:

	Maximum distance	
Type of fluorescent lamp	in	mm
T5 linear lamps	1/4	6
All other linear lamps		
If rated 500 mA or less	1/2	13
If rated greater than 500 mA	1	25
T8 & T12 U-shaped lamps	1/2	13
Circular lamps	1/2	13

Copyright © 1998 by National Electrical Manufacturers Association
1300 North 17th Street, Suite 1847, Rosslyn, VA 22209

Copyright National Electrical Manufacturers Association
Provided by IHS under license with NEMA
No reproduction or networking permitted without license from IHS
Not for Resale

13.3 Auxiliary supports

Certain lamp types are not intended to be held in place in a luminaire by the lamp base alone and auxiliary support is necessary. Such auxiliary support may take the form of a clip that holds the lamp's bulb. Location of the clip and its material may be critical for proper lamp operation. For circular-shaped and U-shaped lamps, location of auxiliary bulb supports is not critical. For 2G11-based lamps, location is critical (see the lamp data sheets).

The legs of U-shaped lamps may be connected with a brace. If present, this brace shall not be used to support the lamp in the luminaire.

Auxiliary supports or clips shall not restrict entry of the lamp into the luminaire nor cause damage to a lamp.

Copyright © 1998 by National Electrical Manufacturers Association
1300 North 17th Street, Suite 1847, Rosslyn, VA 22209

Copyright National Electrical Manufacturers Association
Provided by IHS under license with NEMA
No reproduction or networking permitted without license from IHS
Not for Resale

Part II Principles of Dimensioning

The diagrammatic drawings in this part give graphical definitions of the dimensional code letters used on the individual lamp data sheets. There are four major families of lamps depicted:

a) linear lamps
b) circular lamps
c) U-shaped lamps
d) 2G11 based lamps

These drawings (figures 1-4) are intended only to indicate dimensions to be controlled and are to be used in conjunction with the relevant lamp data sheets.

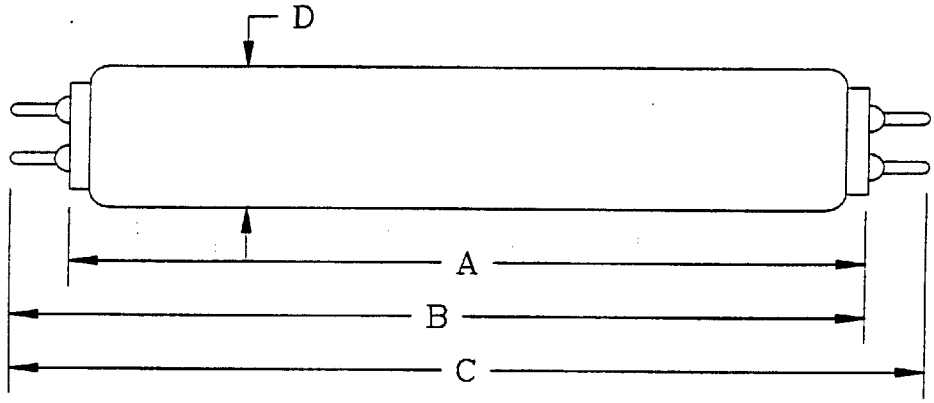

(a) G5, G13, G20 bipin bases

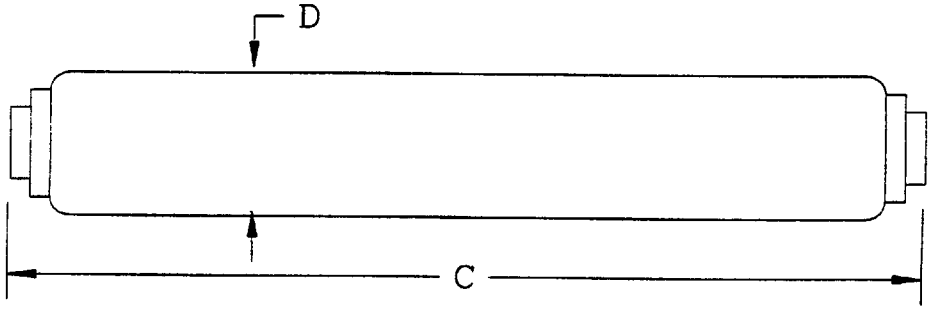

(b) R17d recessed double-contact base

Figure 1 – Linear lamps

Copyright © 1998 by National Electrical Manufacturers Association
1300 North 17th Street, Suite 1847, Rosslyn, VA 22209

Copyright National Electrical Manufacturers Association
Provided by IHS under license with NEMA
No reproduction or networking permitted without license from IHS
Not for Resale

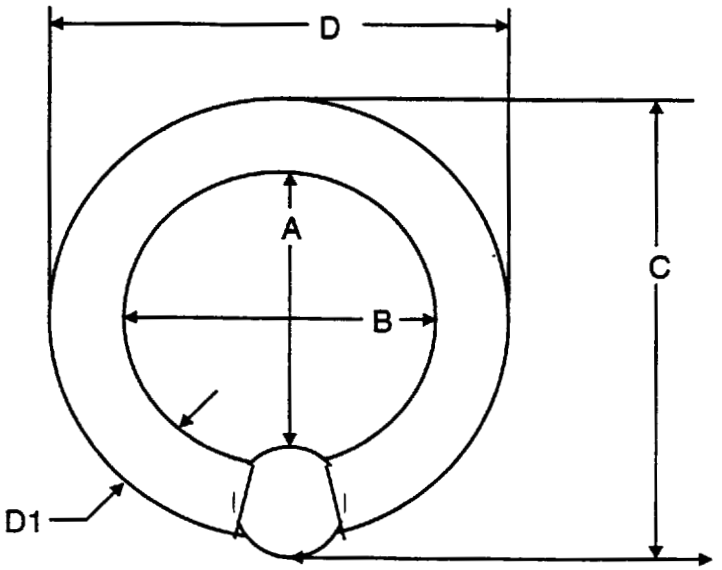

Figure 2 – Circular lamps (G10q base)

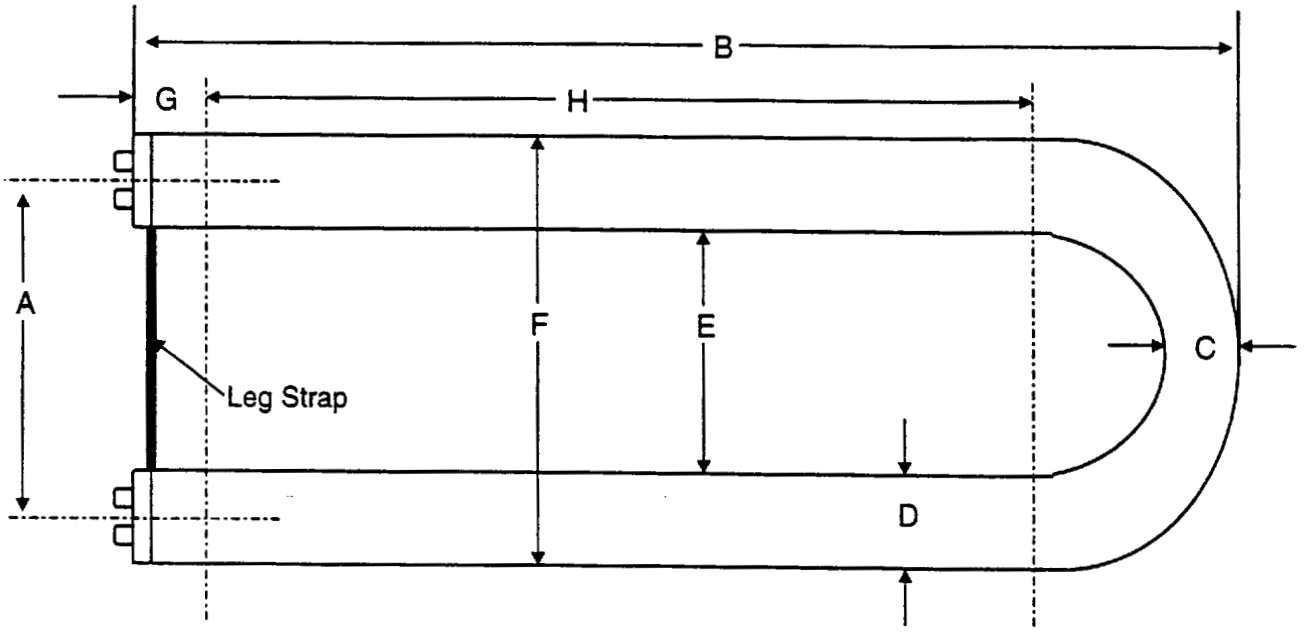

Figure 3 – U-shaped lamps (2G13 base)

Copyright © 1998 by National Electrical Manufacturers Association
1300 North 17th Street, Suite 1847, Rosslyn, VA 22209

First Edition
May 1998

Copyright National Electrical Manufacturers Association
Provided by IHS under license with NEMA
No reproduction or networking permitted without license from IHS
Not for Resale

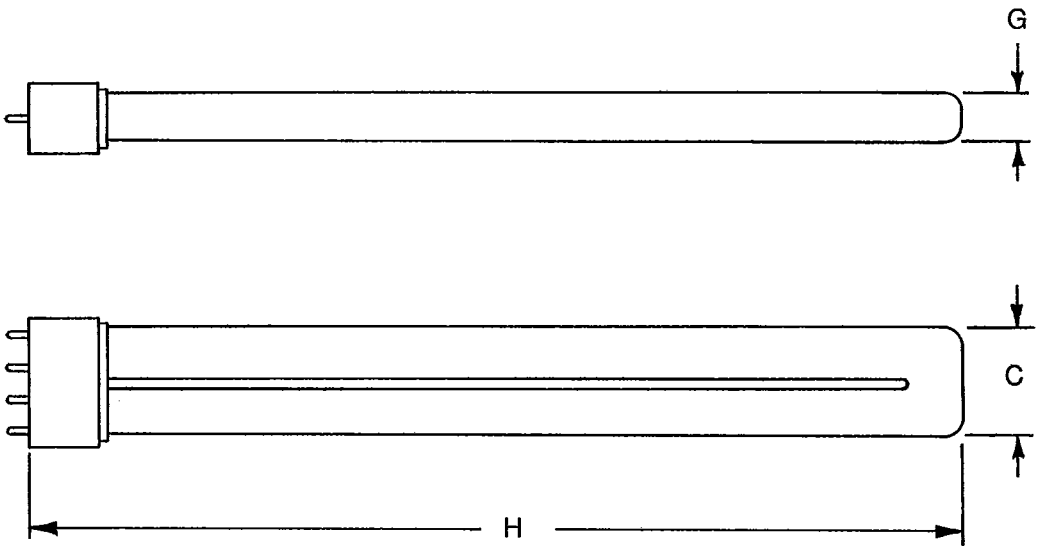

Figure 4 – 2G11 based lamps

Copyright National Electrical Manufacturers Association
Provided by IHS under license with NEMA
No reproduction or networking permitted without license from IHS

Not for Resale

Part III Annexes

Annex A
(normative)

Identification

A.1 General

There is a need to identify lamp abbreviations for the lamps in this standard. These abbreviations will benefit users of the fluorescent lamp data sheets. A lamp, in this designation system, is identified by wattage, length or shape, bulb size, and circuit application.

This guide is intended to provide a set of rules for reference in deriving abbreviations for lamp data sheets, in a consistent manner. There is no implication that abbreviations derived from this system are to be used or required for commercial literature applications.

A.2 Designation system

Only one abbreviation, under this system, is to be applied to a lamp data sheet. No attempt is made to identify lamp colors.

An abbreviation is comprised of six parts:

a) lamp rated or nominal wattage;

b) lamp nominal length;

c) bulb diameter;

d) lamp shape, as required;

e) lamp base, as required;

f) circuit or special description, or both.

The parts of the abbreviation are joined directly together in the above sequence and slashes are used as separators after wattage, bulb diameter, and the lamp shape or lamp base if used. A hyphen may be used if two properties are identified under item (f) above. Otherwise, there are no spaces or other separator marks used.

A.2.1 Wattage

All lamps shall be identified by wattage, even though they may not be marketed by wattage. The wattage values shown shall be the rated or nominal wattage of the lamp. The numerical value of wattage in watts shall be followed directly by the letter "W".

A.2.2 Length

The length of a linear lamp shall be expressed in the designation by a number representing the nominal length of the lamp, in inches. Only the numerical value is entered. This length code is based upon a first-order assumption that fluorescent lamps are linear lamps.

For those special cases in which it is necessary to identify lamp length in metric units, the abbreviations shall contain the letters "mm" immediately following the length value in millimeters.

A.2.3 Bulb diameter

Bulb diameter shall be entered directly following the above length without any separator. The bulb diameter information comprises two sub-parts. The first is a letter to indicate the bulb's cross-sectional shape and the other part is the cross-sectional diameter. The bulb shape is identified by a letter symbol as follows:

T – Round cross-sectional tubular bulb

PG – Power groove indented bulb

Bulb diameter values shall be entered in the conventional eighths-of-an-inch system.

For those special cases in which it is necessary to identify bulb diameter in metric units, the abbreviation shall contain the letters "mm" immediately following the diameter value in millimeters.

A.2.4 Lamp shape

Exceptions to the linear assumption, such as circular, U-shape, and compact single-ended

Copyright National Electrical Manufacturers Association
Provided by IHS under license with NEMA
No reproduction or networking permitted without license from IHS
Not for Resale

lamps, are called out with a special code in this length section of the abbreviation. Special descriptions are defined as follows:

U1 – U-shaped lamp, 1-5/8- inch leg centers

U3 – U-shaped lamp, 3-5/8-inch leg centers

U6 – U-shaped lamp, 6-inch leg centers

C8 – Circular-shaped lamp, 8-inch diameter of circle

C12 – Circular-shaped lamp, 12-inch diameter of circle

C16 – Circular-shaped lamp, 16-inch diameter of circle

T – Twin, two parallel legs with a common base

Q – Quad, four parallel legs, square, with a common base

As new lamps of similar design to the above are standardized, additional numerical values may be used within the established pattern. Radically new lamp shapes will necessitate the establishment of new letter codes and definitions in this subclause.

A.2.5 Lamp base

The lamp's base code may be used as part of the designation in certain cases. Those are the cases where the application of the lamp to the correct auxiliary circuit is controlled by means of the base on the lamp. The compact, single-ended family of lamps, for example, employs a variety of bases for use in particular circuits. Proper base codes are noted in the base standard (ANSI C81.61).

A.2.6 Circuit or special description, or both

This part of the identification shall follow the slashed separator that follows the bulb diameter or the optional shape and base information when they are provided. It is intended to help the user associate the lamp with the correct auxiliary circuit.

This abbreviation system does not necessarily identify all circuits that a lamp manufacturer may have authorized for use with a particular lamp.

Lamps that are specified for operation at two separate wattage or current levels, on the same type of circuit, are identified in the abbreviation by the lower level only.

Typical circuit identifiers are:

RS – Rapid start

PH – Preheat start (starter)

IS – Bipin base, instant start

SP – Single-pin base, instant start

HO – 800 mA and 1000 mA, high output, rapid start

1.5A – 1500 mA, rapid start

Special descriptions may be necessary in certain cases to separate lamps of similar design. These special identifiers may be used in addition to the above circuit identifications, separated by a hyphen. Special descriptions are defined as follows:

B – Bactericidal lamp

CC – Cold cathode

LP – Low pressure

HP – High pressure

Copyright National Electrical Manufacturers Association
Provided by IHS under license with NEMA
No reproduction or networking permitted without license from IHS
Not for Resale

A.3 Sample abbreviations

The following table contains several sample abbreviations with explanations:

Abbreviations	Lamp explanation
30W/36T12/RS	30-watt, 36-inch T12, rapid start
40W/22T12/U6/RS	40-watt, 22-inch T12, U-shaped, 6-inch leg center spacing, rapid start
215W/96T12/1.5A	215-watt, 96-inch T12, 1500-mA, rapid start
37W/24T12/HO	37-watt, 24-inch T12, high output, rapid start
116W/48T12/1.5A	116-watt, 48-inch T12, 1500-mA, rapid start
116W/48PG17/1.5A	116-watt, 48-inch PG17, 1500-mA, rapid start
4W/6T5/PH	4-watt, 6-inch T5, preheat start
30W/36T8/PH-B	30-watt, 36-inch T8, preheat start, bactericidal
40W/60T12/IS	40-watt, 60-inch T12, bipin base, instant start
75W/96T12/SP	75-watt, 96-inch T12 single pin, instant start
5W/4T4/T/G23/PH	5-watt, 4-inch T4, twin, G23 base, preheat start
13W/5T4/Q/G23-2/PH	13-watt, 5-inch T4, quad, G23-2 base, preheat start
36-39W/16T5/T/2G11/PH-RS	36-39-watt, 16-inch T5, twin, 2G11 base, preheat and rapid start

Copyright National Electrical Manufacturers Association
Provided by IHS under license with NEMA
No reproduction or networking permitted without license from IHS
Not for Resale

Annex B
(informative)

Former designations of C78 fluorescent lamp standards

Prior to the 1978 versions of ANSI C78.1 and C78.2, fluorescent lamps were specified in individual American National Standards. Those individual standards are listed below:

Title	Former ANSI designation
30-Watt T-12, Rapid-Start Fluorescent Lamp	C78.708-1975
40-Watt T-10, Rapid-Start Fluorescent Lamp	C78.713-1972
40-Watt T-12, Rapid-Start Fluorescent Lamp	C78.700-1968 (R1973)
40-Watt, 48-Inch, T-12, Preheat-Start Fluorescent Lamp	C78.408-1975
40-Watt T-12, U-Shaped 3-5/8-Inch Center Rapid-Start Fluorescent Lamp	C78.714-1975
40-Watt T-12, U-Shaped 6-Inch Center Rapid-Start Fluorescent Lamp	C78.715-1972
22-Watt T-9, 8-Inch Circular Rapid-Start Fluorescent Lamp	C78.416-1972
32-Watt T-10, 12-Inch Circular Rapid-Start Fluorescent Lamp	C78.413-1972
40-Watt T-10, 16-Inch Circular Rapid-Start Fluorescent Lamp	C78.415-1972
24-Inch (0.800-Ampere) T-12, Rapid-Start Fluorescent Lamp	C78.709-1975
36-Inch (0.800-Ampere) T-12, Rapid-Start Fluorescent Lamp	C78.710-1975
48-Inch (0.800-Ampere and 1.0-Ampere) T-12, Rapid-Start Fluorescent Lamp	C78.704-1968 (R1973)
60-Inch (0.800-Ampere) T-12, Rapid-Start Fluorescent Lamp	C78.712-1968 (R1973)
72-Inch (0.800-Ampere and 1.0-Ampere) T-12, Rapid-Start Fluorescent Lamp	C78.701-1968 (R1973)
84-Inch (0.800-Ampere) T-12, Rapid-Start Fluorescent Lamp	C78.711-1975
96-Inch (0.800-Ampere and 1.0-Ampere) T-12, Rapid-Start Fluorescent Lamp	C78.702-1968 (R1973)
48-Inch T-12 and PG-17, Rapid-Start (1.5-Ampere) Fluorescent Lamps	C78.705-1968 (R1973)
72-Inch T-12 and PG-17, Rapid-Start (1.5-Ampere) Fluorescent Lamps	C78.706-1968 (R1973)
96-Inch T-12 and PG-17, Rapid-Start (1.5-Ampere) Fluorescent Lamps	C78.707-1968 (R1973)

Copyright National Electrical Manufacturers Association
Provided by IHS under license with NEMA
No reproduction or networking permitted without license from IHS
Not for Resale

ANSI C78.1 91 ■ 0724150 0501725 7 ■

Annex C
(informative)

Bibliography

IEC Publication 81, *Tubular fluorescent lamps for general lighting service* [4)]

[4)] Available from the American National Standards Institute, 11 West 42nd Street, New York, NY 10036.

Copyright National Electrical Manufacturers Association
Provided by IHS under license with NEMA
No reproduction or networking permitted without license from IHS
Not for Resale

Part IV Lamp Specification Data Sheets

Copyright National Electrical Manufacturers Association
Provided by IHS under license with NEMA
No reproduction or networking permitted without license from IHS

Not for Resale

16-Watt, U-Shaped, 1-5/8-Inch Center T8, Rapid-Start Fluorescent Lamp

Lamp description

Lamp abbreviation 16W/11T8/U1/RS
Nominal wattage ..... 16 watts
Nominal overall length ..... 11 in (279 mm)
Bulb designation ..... T8 (T25), U-shaped
Base 2G13-41
Circuit application ..... Rapid start

Dimensional characteristics (definitions of Part II apply)

	Inches		Millimeters	
	Min	Max	Min	Max
A (Lamp legs, center to center, nominal)	1-5/8	1-5/8	41	41
B (Base face to lamp end)	10.25	10.60	260.4	269.2
C (Bulb diameter in bend)	0.94	1.10	23.9	27.9
D (Bulb diameter in legs)	0.94	1.10	23.9	27.9
E (Distance between legs)	0.50	–	12.7	–
F (Distance to outside of legs)	–	2.75	–	69.9
G (Base face to beginning of Dimension H)	1.0	–	25.4	–
H (Length over which Dimensions D, E, and F apply)	6.0	–	152.4	–

Lamp legs shall be in the same plane over the unbent portion of the lamp; maximum deviation = 0.13 in (3.3 mm).

Electrical characteristics

Lamp operating characteristics (conditions of clause 11 apply)

Wattage
- Arc wattage (W) 14.5
- Approximate cathode wattage (with 3.6 V on each cathode) (W) 1.7
- Total wattage (W). 16.2

Voltage (V) 65
Current (A) 0.265

Reference ballast characteristics

Rated input voltage (V). 236
Reference current (A) 0.265
Impedance (ohms). 800

Copyright National Electrical Manufacturers Association
Provided by IHS under license with NEMA
No reproduction or networking permitted without license from IHS
Not for Resale

Cathode characteristics

Type.....Low resistance
Resistance (at 3.6 V)
Objective (ohms).....11.0
Minimum (ohms).....8.0

Information for ballast design (conditions of clause 12 apply)

Lamp starting requirements

	Single lamp	Ballasts for two lamps
Voltage between lamp terminals (Note 1)		
at 50°F (10°C) and above, (Vrms) min	140	210
at 50°F (10°C) and above, (Vrms) max	190	285
Voltage lamp terminal to starting aid (Note 2)		
at 50°F (10°C) and above, (Vpeak) min	325	325
Waveshape of starting voltage		
crest factor, maximum	2.0	2.0
Starting capacitor size		
minimum (μF) (at 60 Hz)		0.04
maximum (μF) (at 60 Hz)		0.06

NOTES

1 These values are for lead circuits only. Values for lag circuits are under consideration.
2 These values are for crest factors of 1.55 to 2.0. Add 20% for crest factors less than 1.55.

Cathode heat requirements

Rapid start

Voltage.....3.6 V nominal
Limits during operation.....2.5 V min, 4.4 V max
Dummy load resistor.....11.0 ohms ± 0.1 ohm
Voltage across dummy load.....3.4 V min, 4.5 V max

Copyright National Electrical Manufacturers Association
Provided by IHS under license with NEMA
No reproduction or networking permitted without license from IHS
Not for Resale

17-Watt, 24-Inch T8, Rapid-Start Fluorescent Lamp

Lamp description

Lamp abbreviation 17W/24T8/RS
Nominal wattage ..... 17 watts
Nominal overall length ..... 24 in (600 mm)
Bulb designation T8 (T25)
Base ..... G13, Medium bipin
Circuit application ..... Rapid start

Dimensional characteristics (definitions of Part II apply)

	Inches		Millimeters	
	Min	Max	Min	Max
A (Base face to base face)	–	23.22	–	589.8
B (Base face to end of opposite base pin)	23.40	23.50	594.4	596.9
C (End of base pin to end of opposite pin end)	23.67	23.78	601.2	604.0
D (Bulb, outside diameter)	0.94	1.10	23.9	27.9

Electrical characteristics

Lamp operating characteristics (conditions of clause 11 apply)
Wattage
- Arc wattage (W) 16.0
- Approximate cathode wattage (with 3.6 V on each cathode) (W) 1.5
- Total wattage (W) 17.5

Voltage (V) 70
Current (A) 0.265

Reference ballast characteristics
Rated input voltage (V) 236
Reference current (A) 0.265
Impedance (ohms) 800

Cathode characteristics
Type ..... Low resistance
Resistance (at 3.6 V)
- Objective (ohms) 11.0
- Minimum (ohms) 8.0

Copyright National Electrical Manufacturers Association
Provided by IHS under license with NEMA
No reproduction or networking permitted without license from IHS
Not for Resale

Information for ballast design (conditions of clause 12 apply)

Lamp starting requirements

	Single lamp	Ballasts for two lamps
Voltage between lamp terminals (Note 1)		
at 50°F (10°C) and above, (Vrms) min	140	210
at 50°F (10°C) and above, (Vrms) max	190	285
Voltage lamp terminal to starting aid (Note 2)		
at 50°F (10°C) and above, (Vpeak) min.	325	325
Waveshape of starting voltage		
crest factor, maximum.	2.0	2.0
Starting capacitor size		
minimum (μF) (at 60 Hz).		0.04
maximum (μF) (at 60 Hz).		0.06

NOTES

1 These values are for lead circuits only. Values for lag circuits are under consideration.

2 These values are for crest factors of 1.55 to 2.0. Add 20% for crest factors less than 1.55.

Cathode heat requirements

Rapid start

Voltage	3.6 V nominal
Limits during operation	2.5 V min, 4.4 V max
Dummy load resistor	11.0 ohms ± 0.1 ohm
Voltage across dummy load	3.4 V min, 4.5 V max

Copyright National Electrical Manufacturers Association
Provided by IHS under license with NEMA
No reproduction or networking permitted without license from IHS

Not for Resale

20-Watt, 6-Inch Circular T9, Rapid-Start Fluorescent Lamp

Lamp description

Lamp abbreviation 20W/T9/C6/RS
Nominal wattage ..... 20 watts
Nominal diameter ..... 6-1/2 in (165 mm)
Bulb designation ..... T9 (T28) Circular
Base ..... G10q, Four-pin circular
Circuit application ..... Rapid start or preheat (switch) start

Dimensional characteristics (definitions of Part II apply)

	Inches		Millimeters	
	Min	Max	Min	Max
A (Inside of base to opposite wall)	4.12	4.38	104.6	111.3
B (Inside, other than Dimension A)	4.06	4.44	103.1	112.8
C & D (Lamp outside diameter)	6.25	6.75	158.7	171.5
D1 (Bulb, outside diameter)	1.03	1.22	26.2	31.0

Electrical characteristics

Lamp operating characteristics (conditions of clause 11 apply)

Wattage
- Arc wattage (W) 17.0
- Approximate cathode wattage (with 3.6 V on each cathode) (W) 2.0
- Total wattage (W) 19.0

Voltage (V) 49
Current (A) 0.380

Reference ballast characteristics

Rated input voltage (V) 236
Reference current (A) 0.380
Impedance (ohms) 575

Cathode characteristics

Type ..... Low resistance
Resistance (at 3.6 V)
- Objective (ohms) 9.6
- Minimum (ohms) 7.0

Copyright National Electrical Manufacturers Association
Provided by IHS under license with NEMA
No reproduction or networking permitted without license from IHS
Not for Resale

Information for ballast design (conditions of clause 12 apply)

Lamp starting requirements

	Single lamp	Ballasts for one 6-inch and one 8-inch lamp
Rapid start		
Voltage between lamp terminals (Note 1)		
at 50°F (10°C) and above, (Vrms) min	150	225
Voltage lamp terminal to starting aid (Note 2)		
at 50°F (10°C) and above, (Vpeak) min	290	290
Waveshape of starting voltage		
crest factor, maximum	2.0	2.0
Starting capacitor size		
minimum (μF) (at 60 Hz)		0.008
maximum (μF) (at 60 Hz)		0.06
Preheat (switch) start		
Voltage between lamp terminals		
at 50°F (10°C) and above, (Vrms) min	108	

NOTES

1 These values are for lead circuits only. For lag circuits, add 3%.

2 These values are for crest factors of 1.55 to 2.0. Add 10% for crest factors less than 1.55.

Cathode heat requirements

Rapid start	
Voltage	3.6 V nominal
Limits during operation	2.5 V min, 4.0 V max
Dummy load resistor	9.6 ohms ± 0.1 ohm
Voltage across dummy load	3.4 V min, 4.5 V max
Preheat (switch) start	
Current during preheat	
at rated primary voltage.	0.50 A min, 0.70 A max
Preheat time at 0.60-A	
preheat current	0.75 s min

Copyright National Electrical Manufacturers Association
Provided by IHS under license with NEMA
No reproduction or networking permitted without license from IHS
Not for Resale

22-Watt, 8-Inch Circular T9, Rapid-Start Fluorescent Lamp

This standard data sheet is fully compatible with IEC Publication 81.

Lamp description

Lamp abbreviation 22W/T9/C8/RS
Nominal wattage ..... 22 watts
Nominal diameter ..... 8-1/4 in (210 mm)
Bulb designation ..... T9 (T28) Circular
Base ..... G10q, Four-pin circular
Circuit application ..... Rapid start and preheat (switch)-start

Dimensional characteristics (definitions of Part II apply)

	Inches		Millimeters	
	Min	Max	Min	Max
A (Inside of base to opposite wall)	5.87	6.13	149.1	155.7
B (Inside, other than Dimension A)	5.81	6.19	147.6	157.2
C & D (Lamp outside diameter)	8.00	8.50	203.2	215.9
D1 (Bulb, outside diameter)	1.03	1.22	26.2	31.0

Electrical characteristics

Lamp operating characteristics (conditions of clause 11 apply)

Wattage
- Arc wattage (W) 20.5
- Approximate cathode wattage (with 3.6 V on each cathode) (W) 2.0
- Total wattage (W) 22.5

Voltage (V) 61
Current (A) 0.370

Reference ballast characteristics

Rated input voltage (V) 236
Reference current (A) 0.370
Impedance (ohms) 575

Cathode characteristics

Type ..... Low resistance
Resistance (at 3.6 V)
- Objective (ohms) 9.6
- Minimum (ohms) 7.0

Copyright National Electrical Manufacturers Association
Provided by IHS under license with NEMA
No reproduction or networking permitted without license from IHS
Not for Resale

Information for ballast design (conditions of clause 12 apply)

Lamp starting requirements

	Single lamp	Ballasts for one 8-inch and one 12-inch lamp
Rapid start		
Voltage between lamp terminals (Note 1)		
at 50°F (10°C) and above, (Vrms) min	180	230
Voltage lamp terminal to starting aid (Note 2)		
at 50°F (10°C) and above, (Vpeak) min	290	290
Waveshape of starting voltage crest factor, maximum	2.0	2.0
Starting capacitor size		
minimum (μF) (at 60 Hz)		0.008
maximum (μF) (at 60 Hz)		0.06
Preheat (switch) start		
Voltage between lamp terminals		
at 50°F (10°C) and above, (Vrms) min	108	

NOTES

1 These values are for lead circuits only. For lag circuits, add 3%.

2 These values are for crest factors of 1.55 to 2.0. Add 10% for crest factors less than 1.55.

Cathode heat requirements

Rapid start	
Voltage	3.6 V nominal
Limits during operation	2.5 V min, 4.0 V max
Dummy load resistor	9.6 ohms ± 0.1 ohm
Voltage across dummy load	3.4 V min, 4.5 V max
Preheat (switch) start	
Current during preheat, at rated primary voltage	0.50 A min, 0.7 A max
Preheat time at 0.60-A preheat current	0.75 s min

Copyright National Electrical Manufacturers Association
Provided by IHS under license with NEMA
No reproduction or networking permitted without license from IHS
Not for Resale

24-Watt, U-Shaped, 1-5/8-Inch Center T8, Rapid-Start Fluorescent Lamp

Lamp description

Lamp abbreviation 24W/17T8/U1/RS
Nominal wattage ..... 24 watts
Nominal overall length ..... 17 in (432 mm)
Bulb designation ..... T8 (T25), U-shaped
Base 2G13-41
Circuit application ..... Rapid start

Dimensional characteristics (definitions of Part II apply)

	Inches		Millimeters	
	Min	Max	Min	Max
A (Lamp legs, center to center, nominal)	1-5/8	1-5/8	41	41
B (Base face to lamp end)	16.25	16.60	412.8	421.6
C (Bulb diameter in bend)	0.94	1.10	23.9	27.9
D (Bulb diameter in legs)	0.94	1.10	23.9	27.9
E (Distance between legs)	0.50	–	12.7	–
F (Distance to outside of legs)	–	2.75	–	69.9
G (Base face to beginning of Dimension H)	1.0	–	25.4	–
H (Length over which Dimensions D, E, and F apply)	12.0	–	304.8	–

Lamp legs shall be in the same plane over the unbent portion of the lamp; maximum deviation = 0.13 inch (3.3 mm).

Electrical characteristics

Lamp operating characteristics (conditions of clause 11 apply)
Wattage
Arc wattage (W) 22.5
Approximate cathode wattage
(with 3.6 V on each cathode) (W) 1.7
Total wattage (W) 24.2
Voltage (V) 99
Current (A) 0.265

Reference ballast characteristics
Rated input voltage (V) 236
Reference current (A) 0.265
Impedance (ohms) 733

Copyright National Electrical Manufacturers Association
Provided by IHS under license with NEMA
No reproduction or networking permitted without license from IHS
Not for Resale

Cathode characteristics

Type.....Low resistance

Resistance (at 3.6 V)

Objective (ohms).....11.0

Minimum (ohms).....8.0

Information for ballast design (conditions of clause 12 apply)

Lamp starting requirements

	Single lamp	Ballasts for two lamps
Voltage between lamp terminals (Note 1)		
at 50°F (10°C) and above, (Vrms) min.	170	260
at 50°F (10°C) and above, (Vrms) max	230	355
Voltage lamp terminal to starting aid (Note 2)		
at 50°F (10°C) and above, (Vpeak) min	325	325
Waveshape of starting voltage		
crest factor, maximum	2.0	2.0
Starting capacitor size		
minimum (μF) (at 60 Hz)		0.04
maximum (μF) (at 60 Hz)		0.06

NOTES

1 These values are for lead circuits only. Values for lag circuits are under consideration.

2 These values are for crest factors of 1.55 to 2.0. Add 20% for crest factors less than 1.55.

Cathode heat requirements

Rapid start

Voltage.....3.6 V nominal

Limits during operation.....2.5 V min, 4.4 V max

Dummy load resistor.....11.0 ohms ± 0.1 ohm

Voltage across dummy load.....3.4 V min, 4.5 V max

Copyright National Electrical Manufacturers Association
Provided by IHS under license with NEMA
No reproduction or networking permitted without license from IHS

Not for Resale

25-Watt, 36-Inch T8, Rapid-Start Fluorescent Lamp

Lamp description

Lamp abbreviation 25W/36T8/RS
Nominal wattage ..... 25 watts
Nominal overall length ..... 36 in (900 mm)
Bulb designation T8 (T25)
Base ..... G13, Medium bipin
Circuit application ..... Rapid start

Dimensional characteristics (definitions of Part II apply)

	Inches		Millimeters	
	Min	Max	Min	Max
A (Base face to base face)	–	35.22	–	894.6
B (Base face to end of opposite base pin)	35.40	35.50	899.2	901.7
C (End of base pin to end of opposite pin end)	35.67	35.78	906.0	908.8
D (Bulb, outside diameter)	0.94	1.10	23.9	27.9

Electrical characteristics

Lamp operating characteristics (conditions of clause 11 apply)

Wattage
- Arc wattage (W). 23.5
- Approximate cathode wattage (with 3.6 V on each cathode) (W) 1.5
- Total wattage (W) 25.0

Voltage (V) 100
Current (A) 0.265

Reference ballast characteristics
- Rated input voltage (V) 236
- Reference current (A) 0.265
- Impedance (ohms) 733

Cathode characteristics

Type ..... Low resistance
Resistance (at 3.6 V)
- Objective (ohms) 11.0
- Minimum (ohms). 8.0

Copyright National Electrical Manufacturers Association
Provided by IHS under license with NEMA
No reproduction or networking permitted without license from IHS
Not for Resale

Information for ballast design (conditions of clause 12 apply)

Lamp starting requirements

	Single lamp	Ballasts for two lamps
Voltage between lamp terminals (Note 1)		
at 50°F (10°C) and above, (Vrms) min	170	260
at 50°F (10°C) and above, (Vrms) max	230	355
Voltage lamp terminal to starting aid (Note 2)		
at 50°F (10°C) and above, (Vpeak) min.	325	325
Waveshape of starting voltage		
crest factor, maximum	2.0	2.0
Starting capacitor size		
minimum (μF) (at 60 Hz)		0.04
maximum (μF) (at 60 Hz)		0.06

NOTES

1 These values are for lead circuits only. Values for lag circuits are under consideration.

2 These values are for crest factors of 1.55 to 2.0. Add 20% for crest factors less than 1.55.

Cathode heat requirements

Rapid start

Voltage	3.6 V nominal
Limits during operation	2.5 V min, 4.4 V max
Dummy load resistor	11.0 ohms ± 0.1 ohm
Voltage across dummy load	3.4 V min, 4.5 V max

Copyright National Electrical Manufacturers Association
Provided by IHS under license with NEMA
No reproduction or networking permitted without license from IHS
Not for Resale

30-Watt, 36-Inch T12, Rapid-Start Fluorescent Lamp

This standard data sheet is fully compatible with IEC Publication 81.

Lamp description

Lamp abbreviation 30W/36T12/RS
Nominal wattage ..... 30 watts
Nominal overall length ..... 36 in (900 mm)
Bulb designation T12 (T38)
Base ..... G13, Medium bipin
Circuit application ..... Rapid start

Dimensional characteristics (definitions of Part II apply)

	Inches		Millimeters	
	Min	Max	Min	Max
A (Base face to base face)	–	35.22	–	894.6
B (Base face to end of opposite base pin)	35.40	35.50	899.2	901.7
C (End of base pin to end of opposite pin end)	35.67	35.78	906.0	908.8
D (Bulb, outside diameter)	1.41	1.59	35.8	40.4

Electrical characteristics

Lamp operating characteristics (conditions of clause 11 apply)

Wattage
- Arc wattage (W) 30.5
- Approximate cathode wattage (with 3.6 V on each cathode) (W) 2.0
- Total wattage (W) 32.5

Voltage (V) 77
Current (A) 0.430

Reference ballast characteristics
- Rated input voltage (V) 180
- Reference current (A) 0.430
- Impedance (ohms) 335

Cathode characteristics

Type ..... Low resistance
Resistance (at 3.6 V)
- Objective (ohms) 9.6
- Minimum (ohms) 7.0

Copyright National Electrical Manufacturers Association
Provided by IHS under license with NEMA
No reproduction or networking permitted without license from IHS
Not for Resale

Information for ballast design (conditions of clause 12 apply)

Lamp starting requirements

	Single lamp	Ballasts for two lamps	Ballasts for three lamps
Voltage between lamp terminals (Note 1)			
at 50°F (10°C) and above, (Vrms) min	150	215	305
at 50° (10°C) and above, (Vrms) max	205	290	410
at 0°F (–17.8°C) and above, (Vrms) min	180	245	335
Voltage lamp terminal to starting aid (Note 2)			
at 50°F (10°C) and above, (Vpeak) min	280	280	280
at 0°F (–17.8°C) and above, (Vpeak) min	500	500	500
Waveshape of starting voltage crest factor, maximum	2.0	2.0	2.0
Starting capacitor size			
minimum (μF) (at 60 Hz)		0.04	0.04
maximum (μF) (at 60 Hz)		0.06	0.06

NOTES

1 These values are for lead circuits only. For lag circuits, add 3%.

2 These values are for crest factors of 1.55 to 2.0. Add 10% for crest factors less than 1.55.

Cathode heat requirements

Rapid start

Voltage	3.6 V nominal
Limits during operation	2.5 V min, 4.0 V max
Dummy load resistor	9.6 ohms ± 0.1 ohm
Voltage across dummy load	3.4 V min, 4.5 V max

Copyright National Electrical Manufacturers Association
Provided by IHS under license with NEMA
No reproduction or networking permitted without license from IHS
Not for Resale

31-Watt, U-Shaped, 1-5/8-Inch Center T8, Rapid-Start Fluorescent Lamp

Lamp description

Lamp abbreviation 31W/23T8/U1/RS
Nominal wattage ..... 31 watts
Nominal overall length ..... 23 in (584 mm)
Bulb designation ..... T8 (T25), U-shaped
Base 2G13-41
Circuit application ..... Rapid start

Dimensional characteristics (definitions of Part II apply)

	Inches		Millimeters	
	Min	Max	Min	Max
A (Lamp legs, center to center, nominal)	1-5/8	1-5/8	41	41
B (Base face to lamp end)	22.25	22.60	562.2	574.0
C (Bulb diameter in bend)	0.94	1.10	23.9	27.9
D (Bulb diameter in legs)	0.94	1.10	23.9	27.9
E (Distance between legs)	0.50	–	12.7	–
F (Distance to outside of legs)	–	2.75	–	69.9
G (Base face to beginning of Dimension H)	1.0	–	25.4	–
H (Length over which Dimensions D, E, and F apply)	16.0	–	406.4	–

Lamp legs shall be in the same plane over the unbent portion of the lamp; maximum deviation = 0.13 inch (3.3 mm).

Electrical characteristics

Lamp operating characteristics (conditions of clause 11 apply)
Wattage
Arc wattage (W) 29.5
Approximate cathode wattage (with 3.6 V on each cathode) (W) 1.7
Total wattage (W) 31.2
Voltage (V) 135
Current (A) 0.265

Reference ballast characteristics
Rated input voltage (V) 300
Reference current (A) 0.265
Impedance (ohms) 910

Cathode characteristics
Type ..... Low resistance
Resistance (at 3.6 V)
Objective (ohms) 11.0
Minimum (ohms) 8.0

Copyright National Electrical Manufacturers Association
Provided by IHS under license with NEMA
No reproduction or networking permitted without license from IHS
Not for Resale

Information for ballast design (conditions of clause 12 apply)

Lamp starting requirements

	Single lamp	Ballasts for two lamps in series	
		Option A	Option B
Voltage between lamp terminals (Note 1)			
at 50°F (10°C) and above, (Vrms) min	200	300	315
Voltage lamp terminal to starting aid (Note 2)			
at 60°F (15°C) and above, (Vpeak) min	260	260	260
at 50°F (10°C) and above, (Vpeak) min	290	290	290
Waveshape of starting voltage crest factor, maximum	2.0	2.0	2.0
Starting capacitor size			
minimum (μF) (at 60 Hz).		0.08	0.04
maximum (μF) (at 60 Hz).		0.12	0.06

NOTES

1 These values are for lead circuits only. Values for lag circuits are under consideration.

2 These values are for crest factors of 1.55 to 2.0. Add 20% for crest factors less than 1.55.

Cathode heat requirements

Rapid start

Voltage	3.6 V nominal
Limits during operation	2.5 V min, 4.4 V max
Dummy load resistor	11.0 ohms ± 0.1 ohm
Voltage across dummy load	3.4 V min, 4.5 V max

Ground plane spacing

The requirements of 13.2 apply. However, a spacing of up to 0.75 in (19 mm) is allowed if the ground plane is at least 2 in (51 mm) wide.

Copyright National Electrical Manufacturers Association
Provided by IHS under license with NEMA
No reproduction or networking permitted without license from IHS
Not for Resale

32-Watt, 48-Inch T8, Rapid-Start Fluorescent Lamp

This standard data sheet is fully compatible with IEC Publication 81.

Lamp description

Lamp abbreviation 32W/48T8/RS
Nominal wattage ..... 32 watts
Nominal overall length ..... 48 inches (1200 mm)
Bulb designation T8 (T25)
Base ..... G13, Medium bipin
Circuit application ..... Rapid start

Dimensional characteristics (definitions of Part II apply)

	Inches		Millimeters	
	Min	Max	Min	Max
A (Base face to base face)	–	47.22	–	1199.4
B (Base face to end of opposite base pin)	47.40	47.50	1204.0	1206.5
C (End of base pin to end of opposite pin end)	47.67	47.78	1210.8	1213.6
D (Bulb, outside diameter)	0.94	1.10	23.9	27.9

Electrical characteristics

Lamp operating characteristics (conditions of clause 11 apply)

Wattage
- Arc wattage (W) 30.8
- Approximate cathode wattage (with 3.6 V on each cathode) (W) 1.7
- Total wattage (W) 32.5

Voltage (V) 137
Current (A) 0.265

Reference ballast characteristics
- Rated input voltage (V) 300
- Reference current (A). 0.265
- Impedance (ohms) 910

Cathode characteristics

Type ..... Low resistance
Resistance (at 3.6 V)
- Objective (ohms) 11.0
- Minimum (ohms) 8.0

Copyright National Electrical Manufacturers Association
Provided by IHS under license with NEMA
No reproduction or networking permitted without license from IHS
Not for Resale

Information for ballast design (conditions of clause 12 apply)

Lamp starting requirements

	Single lamp	Ballasts for two lamps in series	
		Option A	Option B
Voltage between lamp terminals (Note 1)			
at 50°F (10°C) and above, (Vrms) min.	200	300	315
Voltage lamp terminal to starting aid (Note 2)			
at 60°F (15.6°C) and above, (Vpeak) min	260	260	260
at 50°F (10°C) and above, (Vpeak) min	290	290	290
Waveshape of starting voltage crest factor, maximum	2.0	2.0	2.0
Starting capacitor size			
minimum (μF) (at 60 Hz)		0.08	0.04
maximum (μF) (at 60 Hz)		0.12	0.06

NOTES

1 These values are for lead circuits only. For lag circuits, the values are under consideration.

2 These values are for crest factors of 1.55 to 2.0. Add 20% for crest factors less than 1.55.

Cathode heat requirements

Rapid start

Voltage	3.6 V nominal
Limits during operation	2.5 V min, 4.4 V max
Dummy load resistor	11.0 ohms ± 0.1 ohms
Voltage across dummy load	3.4 V min, 4.5 V max

Ground plane spacing

The requirements of 13.2 apply. However, a spacing of up to 0.75 in (19 mm) is allowed if the ground plane is at least 2 in (51 mm) wide.

Copyright National Electrical Manufacturers Association
Provided by IHS under license with NEMA
No reproduction or networking permitted without license from IHS
Not for Resale

32-Watt, 12-Inch Circular T9, Rapid-Start Fluorescent Lamp

Lamp description

Lamp abbreviation 32W/T9/C12/RS
Nominal wattage ..... 32 watts
Nominal diameter ..... 12 in (305 mm)
Bulb designation ..... T9 (T28) Circular
Base ..... G10q, Four-pin circular
Circuit application ..... Rapid start and preheat (switch) start

Dimensional characteristics (definitions of Part II apply)

	Inches		Millimeters	
	Min	Max	Min	Max
A (Inside of base to opposite wall)	9.43	9.69	239.5	246.1
B (Inside, other than Dimension A)	9.31	9.69	236.5	246.1
C & D (Lamp outside diameter)	11.50	12.00	292.1	304.8
D1 (Bulb, outside diameter)	1.03	1.22	26.2	31.0

Electrical characteristics

Lamp operating characteristics (conditions of clause 11 apply)

Wattage
- Arc wattage (W) 31.0
- Approximate cathode wattage (with 3.6 V on each cathode) (W) 2.0
- Total wattage (W) 33.0

Voltage (V) 84
Current (A) 0.430

Reference ballast characteristics
- Rated input voltage (V) 236
- Reference current (A) 0.425
- Impedance (ohms) 470

Cathode characteristics

Type ..... Low resistance
Resistance (at 3.6 V)
- Objective (ohms) 9.6
- Minimum (ohms) 7.0

Copyright National Electrical Manufacturers Association
Provided by IHS under license with NEMA
No reproduction or networking permitted without license from IHS
Not for Resale

Information for ballast design (conditions of clause 12 apply)

Lamp starting requirements

	Single lamp	Ballasts for one 8-inch and one 12-inch lamp	Ballasts for one 12-inch and one 16-inch lamp
Rapid start			
Voltage between lamp terminals (Note 1)			
at 50°F (10°C) and above, (Vrms) min	200	230	285
Voltage lamp terminal to starting aid (Note 2)			
at 50°F (10°C) and above, (Vpeak) min	290	290	290
Waveshape of starting voltage crest factor, maximum	2.0	2.0	2.0
Starting capacitor size			
minimum (μF) (at 60 Hz)		0.008	0.008
maximum (μF) (at 60 Hz)		0.06	0.06
Preheat (switch) start			
Voltage between lamp terminals			
at 50°F (10°C) minimum, (Vrms) min	132		

NOTES

1 These values are for lead circuits only. For lag circuits, add 3%.

2 These values are for crest factors of 1.55 to 2.0. Add 10% for crest factors less than 1.55.

Cathode heat requirements

Rapid start

Voltage	3.6 V nominal
Limits during operation	2.5 V min, 4.0 V max
Dummy load resistor	9.6 ohms ± 0.1 ohm
Voltage across dummy load	3.4 V min, 4.5 V max

Preheat (switch) start

Current during preheat, at rated primary voltage	0.55 A min, 0.75 A max
Preheat time at 0.65-A preheat current	1.0 s min

Copyright National Electrical Manufacturers Association
Provided by IHS under license with NEMA
No reproduction or networking permitted without license from IHS
Not for Resale

32-Watt, 12-Inch Circular T10, Rapid-Start Fluorescent Lamp

This standard data sheet is fully compatible with IEC Publication 81.

Lamp description

Lamp abbreviation 32W/T10/C12/RS
Nominal wattage ..... 32 watts
Nominal diameter ..... 12 in (305 mm)
Bulb designation ..... T10 (T32) Circular
Base ..... G10q, Four-pin circular
Circuit application ..... Rapid start and preheat (switch)-start

Dimensional characteristics (definitions of Part II apply)

	Inches		Millimeters	
	Min	Max	Min	Max
A (Inside of base to opposite wall)	9.43	9.69	239.5	246.1
B (Inside, other than Dimension A)	9.31	9.69	236.5	246.1
C & D (Lamp outside diameter)	11.75	12.25	298.5	311.2
D1 (Bulb, outside diameter)	1.16	1.34	29.5	34.0

Electrical characteristics

Lamp operating characteristics (conditions of clause 11 apply)

Wattage
- Arc wattage (W) 31.0
- Approximate cathode wattage (with 3.6 V on each cathode) (W) 2.0
- Total wattage (W) 33.0

Voltage (V) 81
Current (A) 0.425

Reference ballast characteristics

Rated input voltage (V) 236
Reference current (A) 0.425
Impedance (ohms) 470

Cathode characteristics

Type ..... Low resistance
Resistance (at 3.6 V)
- Objective (ohms) 9.6
- Minimum (ohms) 7.0

Copyright National Electrical Manufacturers Association
Provided by IHS under license with NEMA
No reproduction or networking permitted without license from IHS
Not for Resale

Information for ballast design (conditions of clause 12 apply)

Lamp starting requirements

	Single lamp	Ballasts for one 8-inch and one 12-inch lamp	Ballasts for one 12-inch and one 16-inch lamp
Rapid start			
Voltage between lamp terminals (Note 1)			
at 50°F (10°C) and above, (Vrms) min	200	230	285
Voltage lamp terminal to starting aid (Note 2)			
at 50°F (10°C) and above, (Vpeak) min	290	290	290
Waveshape of starting voltage crest factor, maximum	2.0	2.0	2.0
Starting capacitor size			
minimum (μF) (at 60 Hz)		0.008	0.008
maximum (μF) (at 60 Hz)		0.06	0.06
Preheat (switch) start			
Voltage between lamp terminals			
at 50°F (10°C) and above, (Vrms) min	132		

NOTES

1 These values are for lead circuits only. For lag circuits, add 3%.

2 These values are for crest factors of 1.55 to 2.0. Add 10% for crest factors less than 1.55.

Cathode heat requirements

Rapid start

Voltage	3.6 V nominal
Limits during operation	2.5 V min, 4.0 V max
Dummy load resistor	9.6 ohms ± 0.1 ohm
Voltage across dummy load	3.4 V min, 4.5 V max

Preheat (switch) start

Current during preheat, at rated primary voltage	0.55 A min, 0.75 A max
Preheat time at 0.65-A preheat current	1.0 s min

Copyright National Electrical Manufacturers Association
Provided by IHS under license with NEMA
No reproduction or networking permitted without license from IHS
Not for Resale

34-Watt, 48-Inch T12, Rapid-Start Fluorescent Lamp

Lamp description

Lamp abbreviation 34W/48T12/RS
Nominal wattage ..... 34 watts
Nominal overall length ..... 48 in (1200 mm)
Bulb designation T12 (T38)
Base ..... G13, Medium bipin
Circuit application ..... Rapid start

Dimensional characteristics (definitions of Part II apply)

	Inches		Millimeters	
	Min	Max	Min	Max
A (Base face to base face)	–	47.22	–	1199.4
B (Base face to end of opposite base pin)	47.40	47.50	1204.0	1206.5
C (End of base pin to end of opposite pin end)	47.67	47.78	1210.8	1213.6
D (Bulb, outside diameter)	1.41	1.59	35.8	40.4

Electrical characteristics

Lamp operating characteristics (conditions of clause 11 apply)

Wattage
- Arc wattage (W) 32.0
- Approximate cathode wattage (with 3.6 V on each cathode) (W) 2.0
- Total wattage (W) 34.0

Voltage (V) 79
Current (A) 0.460

Reference ballast characteristics
- Rated input voltage (V) 236
- Reference current (A) 0.430
- Impedance (ohms) 439

Cathode characteristics

Type ..... Low resistance
Resistance (at 3.6 V)
- Objective (ohms) 9.6
- Minimum (ohms) 7.0

Copyright National Electrical Manufacturers Association
Provided by IHS under license with NEMA
No reproduction or networking permitted without license from IHS
Not for Resale

Information for ballast design (conditions of clause 12 apply)

Lamp starting requirements

	Single lamp	Ballasts for two lamps	Ballasts for three lamps
Voltage between lamp terminals (Note 1)			
at 60°F (15.5°C) and above, (Vrms) min	200	256	to be determined
at 60°F (15.5°C) and above, (Vrms) max	260	330	to be determined
at 60°F (15.5°C) and above, (Vpeak) min peak	315	380	to be determined
Waveshape of starting voltage crest factor, maximum	2.0	2.0	2.0
Lamp current crest factor, maximum	1.9	1.9	1.9
Starting capacitor size			
minimum (μF) (at 60 Hz)		0.04	0.04
maximum (μF) (at 60 Hz)		0.06	0.06

NOTE

1 These values are for lead circuits only. For lag circuits, the values are under consideration.

Cathode heat requirements

Rapid start

Voltage	3.6 V nominal
Limits during operation	2.5 V min, 4.0 V max
Dummy load resistor.	9.6 ohms ± 0.1 ohm
Voltage across dummy load	3.4 V min, 4.5 V max

Copyright National Electrical Manufacturers Association
Provided by IHS under license with NEMA
No reproduction or networking permitted without license from IHS
Not for Resale

37-Watt, 24-Inch T12, 0.800-Ampere, Rapid-Start Fluorescent Lamp

Lamp description

Lamp abbreviation 37W/24T12/HO
Nominal wattage ..... 37 watts
Nominal overall length ..... 24 in (600 mm)
Bulb designation T12 (T38)
Base ..... R17d, Recessed double contact
Circuit application ..... Rapid start, 0.8 A

Dimensional characteristics (definitions of Part II apply)

	Inches		Millimeters	
	Min	Max	Min	Max
C (Ends of opposite base bosses)	21.72	21.91	551.7	556.5
D (Bulb, outside diameter)	1.41	1.59	35.8	40.4

Electrical characteristics

Lamp operating characteristics (conditions of clause 11 apply)

Wattage
- Arc wattage (W) 30.0
- Approximate cathode wattage (with 3.6 V on each cathode) (W) 7.0
- Total wattage (W). 37.0

Voltage (V) 41
Current (A) 0.800

Reference ballast characteristics

Rated input voltage (V) 230
Reference current (A) 0.800
Impedance (ohms) 275

Cathode characteristics

Type ..... Low resistance
Resistance (at 3.6 V)
- Objective (ohms) 3.2
- Minimum (ohms) 2.5

Copyright National Electrical Manufacturers Association
Provided by IHS under license with NEMA
No reproduction or networking permitted without license from IHS
Not for Resale

Information for ballast design (conditions of clause 12 apply)

Lamp starting requirements

	Single lamp	Ballasts for two lamps	Ballasts for three lamps
Voltage between lamp terminals (Note 1)			
at 50°F (10°C) and above, (Vrms) min	85	145	230
at 0°F (-17.8°C) and above, (Vrms) min	110	195	260
at -20°F (-28.9°C) and above, (Vrms) min	140	225	290
Voltage lamp terminal to starting aid (Note 2)			
at 50°F (10°C) and above, (Vpeak) min	325	325	325
at 0°F (-17.8°C) and above, (Vpeak) min	600	600	600
at -20°F (-28.9°C) and above, (Vpeak) min	700	700	700
Waveshape of starting voltage crest factor, maximum	2.0	2.0	2.0
Starting capacitor size			
minimum (μF) (at 60 Hz)		0.06	0.06
maximum (μF) (at 60 Hz)		0.12	0.12

NOTES

1 These values are for lead circuits only. For lag circuits, add 6%.

2 These values are for crest factors of 1.55 to 2.0. Add 10% for crest factors less than 1.55.

Cathode heat requirements

Rapid start

Voltage	3.6 V nominal
Limits during operation	3.0 V min, 4.0 V max
Dummy load resistor	3.2 ohms ± 0.05 ohm
Voltage across dummy load	3.4 V min, 4.5 V max

Copyright National Electrical Manufacturers Association
Provided by IHS under license with NEMA
No reproduction or networking permitted without license from IHS
Not for Resale

40-Watt, 60-Inch T8, Rapid-Start Fluorescent Lamp

Lamp description

Lamp abbreviation 40W/60T8/RS
Nominal wattage ..... 40 watts
Nominal overall length ..... 60 in (1500 mm)
Bulb designation T8 (T25)
Base ..... G13, Medium bipin
Circuit application ..... Rapid start

Dimensional characteristics (definitions of Part II apply)

	Inches		Millimeters	
	Min	Max	Min	Max
A (Base face to base face)	–	59.05	–	1499.9
B (Base face to end of opposite base pin)	59.24	59.33	1504.7	1507.0
C (End of base pin to end of opposite pin end)	59.50	59.61	1511.3	1514.1
D (Bulb, outside diameter)	0.94	1.10	23.9	27.9

Electrical characteristics

Lamp operating characteristics (conditions of clause 11 apply)

Wattage
- Arc wattage (W) 38.5
- Approximate cathode wattage (with 3.6 V on each cathode) (W) 1.5
- Total wattage (W) 40.0

Voltage (V) 172
Current (A) 0.265

Reference ballast characteristics

Rated input voltage (V) 300
Reference current (A) 0.265
Impedance (ohms) 790

Cathode characteristics

Type ..... Low resistance
Resistance (at 3.6 V)
- Objective (ohms) 11.0
- Minimum (ohms) 8.0

Copyright National Electrical Manufacturers Association
Provided by IHS under license with NEMA
No reproduction or networking permitted without license from IHS
Not for Resale

Information for ballast design (conditions of clause 12 apply)

Lamp starting requirements

	Single lamp	Ballasts for two lamps
Voltage between lamp terminals (Note 1)		
at 50°F (10°C) and above, (Vrms) min.	250	385
at 50°F (10°C) and above, (Vrms) max	340	520
Voltage lamp terminal to starting aid (Note 2)		
at 50°F (10°C) and above, (Vpeak) min	325	325
Waveshape of starting voltage crest factor, maximum	2.0	2.0
Starting capacitor size		
minimum (μF) (at 60 Hz)		0.04
maximum (μF) (at 60 Hz).		0.06

NOTES

1 These values are for lead circuits only. For lag circuits, the values are under consideration.

2 These values are for crest factors of 1.55 to 2.0. Add 20% for crest factors less than 1.55.

Cathode heat requirements

Rapid start

Voltage	3.6 V nominal
Limits during operation	2.5 V min, 4.4 V max
Dummy load resistor	11.0 ohms ± 0.1 ohm
Voltage across dummy load	3.4 V min, 4.5 V max

Copyright National Electrical Manufacturers Association
Provided by IHS under license with NEMA
No reproduction or networking permitted without license from IHS

Not for Resale

40-Watt, 16-Inch Circular T9, Rapid-Start Fluorescent Lamp

Lamp description

Lamp abbreviation 40W/T9/C16/RS
Nominal wattage ..... 40 watts
Nominal diameter ..... 16 in (406 mm)
Bulb designation ..... T9 (T28) Circular
Base ..... G10q, Four-pin circular
Circuit application ..... Rapid start

Dimensional characteristics (definitions of Part II apply)

	Inches		Millimeters	
	Min	Max	Min	Max
A (Inside of base to opposite wall)	13.43	13.69	341.1	347.7
B (Inside, other than Dimension A)	13.31	13.69	338.1	347.7
C & D (Lamp outside diameter)	15.50	16.00	393.7	406.4
D1 (Bulb, outside diameter)	1.03	1.22	26.2	31.0

Electrical characteristics

Lamp operating characteristics (conditions of clause 11 apply)

Wattage
- Arc wattage (W) 39.5
- Approximate cathode wattage (with 3.6 V on each cathode) (W) 2.0
- Total wattage (W) 41.5

Voltage (V) 109
Current (A) 0.420

Reference ballast characteristics

Rated input voltage (V) 236
Reference current (A) 0.430
Impedance (ohms) 439

Cathode characteristics

Type ..... Low resistance
Resistance (at 3.6 V)
- Objective (ohms) 9.6
- Minimum (ohms) 7.0

Copyright National Electrical Manufacturers Association
Provided by IHS under license with NEMA
No reproduction or networking permitted without license from IHS
Not for Resale

Information for ballast design (conditions of clause 12 apply)

Lamp starting requirements

	Single lamp	Ballasts for one 12-inch and one 16-inch lamp
Rapid start		
Voltage between lamp terminals (Note 1)		
at 50°F (10°C) and above, (Vrms) min	205	285
Voltage lamp terminal to starting aid (Note 2)		
at 50°F (10°C) and above, (Vpeak) min	290	290
Waveshape of starting voltage crest factor, maximum	2.0	2.0
Starting capacitor size		
minimum (μF) (at 60 Hz)		0.008
maximum (μF) (at 60 Hz)		0.06

NOTES

1 These values are for lead circuits only. For lag circuits, add 3%.

2 These values are for crest factors of 1.55 to 2.0. Add 10% for crest factors less than 1.55.

Cathode heat requirements

Rapid start

Voltage	3.6 V nominal
Limits during operation	2.5 V min, 4.0 V max
Dummy load resistor	9.6 ohms ± 0.1 ohm
Voltage across dummy load	3.4 V min, 4.5 V max

Copyright National Electrical Manufacturers Association
Provided by IHS under license with NEMA
No reproduction or networking permitted without license from IHS
Not for Resale

40-Watt, 16-Inch Circular T10, Rapid-Start Fluorescent Lamp

This standard data sheet is fully compatible with IEC Publication 81.

Lamp description

Lamp abbreviation 40W/T10/C16/RS
Nominal wattage ..... 40 watts
Nominal diameter ..... 16 in (406 mm)
Bulb designation ..... T10 (T32) Circular
Base ..... G10q, Four-pin circular
Circuit application ..... Rapid start

Dimensional characteristics (definitions of Part II apply)

	Inches		Millimeters	
	Min	Max	Min	Max
A (Inside of base to opposite wall)	13.43	13.69	341.1	347.7
B (Inside, other than Dimension A)	13.31	13.69	338.1	347.7
C & D (Lamp outside diameter)	15.75	16.25	400.0	412.8
D1 (Bulb, outside diameter)	1.16	1.34	29.5	34.0

Electrical characteristics

Lamp operating characteristics (conditions of clause 11 apply)

Wattage
- Arc wattage (W) 39.5
- Approximate cathode wattage (with 3.6 V on each cathode) (W) 2.0
- Total wattage (W) 41.5

Voltage (V) 108
Current (A) 0.415

Reference ballast characteristics

Rated input voltage (V) 236
Reference current (A) 0.430
Impedance (ohms) 439

Cathode characteristics

Type ..... Low resistance
Resistance (at 3.6 V)
- Objective (ohms) 9.6
- Minimum (ohms) 7.0

Copyright National Electrical Manufacturers Association
Provided by IHS under license with NEMA
No reproduction or networking permitted without license from IHS
Not for Resale

Information for ballast design (conditions of clause 12 apply)

Lamp starting requirements

	Single lamp	Ballasts for one12-inch and one 16-inch lamp
Rapid start		
Voltage between lamp terminals (Note 1)		
at 50°F (10°C) and above, (Vrms) min	205	285
Voltage lamp terminal to starting aid (Note 2)		
at 50°F (10°C) and above, (Vpeak) min	290	290
Waveshape of starting voltage crest factor, maximum	2.0	2.0
Starting capacitor size		
minimum (μF) (at 60 Hz)		0.008
maximum (μF) (at 60 Hz)		0.06

NOTES

1 These values are for lead circuits only. For lag circuits, add 3%.

2 These values are for crest factors of 1.55 to 2.0. Add 10% for crest factors less than 1.55.

Cathode heat requirements

Rapid start

Voltage	3.6 V nominal
Limits during operation	2.5 V min, 4.0 V max
Dummy load resistor	9.6 ohms ± 0.1 ohm
Voltage across dummy load	3.4 V min, 4.5 V max

Copyright National Electrical Manufacturers Association
Provided by IHS under license with NEMA
No reproduction or networking permitted without license from IHS
Not for Resale

40-Watt, 48-Inch T10, Rapid-Start Fluorescent Lamp

This standard data sheet is closely comparable with IEC Publication 81.

Lamp description

Lamp abbreviation 40W/48T10/RS
Nominal wattage ..... 40 watts
Nominal overall length ..... 48 in (1200 mm)
Bulb designation T10 (T32)
Base ..... G13, Medium bipin
Circuit application ..... Rapid start

Dimensional characteristics (definitions of Part II apply)

	Inches		Millimeters	
	Min	Max	Min	Max
A (Base face to base face)	–	47.22	–	1199.4
B (Base face to end of opposite base pin)	47.40	47.50	1204.0	1206.5
C (End of base pin to end of opposite pin end)	47.67	47.78	1210.8	1213.6
D (Bulb, outside diameter)	1.16	1.34	29.5	34.0

Electrical characteristics

Lamp operating characteristics (conditions of clause 11 apply)

Wattage
- Arc wattage (W) 40.0
- Approximate cathode wattage (with 3.6 V on each cathode) (W) 2.0
- Total wattage (W) 42.0

Voltage (V) 104
Current (A) 0.420

Reference ballast characteristics

Rated input voltage (V) 236
Reference current (A) 0.430
Impedance (ohms) 439

Cathode characteristics

Type ..... Low resistance
Resistance (at 3.6 V)
- Objective (ohms) 9.6
- Minimum (ohms) 7.0

Copyright National Electrical Manufacturers Association
Provided by IHS under license with NEMA
No reproduction or networking permitted without license from IHS
Not for Resale

Information for ballast design (conditions of clause 12 apply)

Lamp starting requirements

	Single lamp	Ballasts for two lamps	Ballasts for three lamps
Voltage between lamp terminals (Note 1)			
at 50°F (10°C) and above, (Vrms) min	200	256	395
at 0°F (-17.8°C) and above, (Vrms) min	260	330	525
Voltage lamp terminal to starting aid (Note 2)			
at 50°F (10°C) and above, (Vpeak) min	240	240	280
Waveshape of starting voltage crest factor, maximum	2.0	2.0	2.0
Starting capacitor size			
minimum (μF) (at 60 Hz)		0.04	0.04
maximum (μF) (at 60 Hz)		0.06	0.06

NOTES

1 These values are for lead circuits only. For lag circuits, add 3%.

2 These values are for crest factors of 1.55 to 2.0. Add 10% for crest factors less than 1.55.

Cathode heat requirements

Rapid start

Voltage	3.6 V nominal
Limits during operation	2.5 V min, 4.0 V max
Dummy load resistor	9.6 ohms ± 0.1 ohm
Voltage across dummy load	3.4 V min, 4.5 V max

Copyright National Electrical Manufacturers Association
Provided by IHS under license with NEMA
No reproduction or networking permitted without license from IHS
Not for Resale

40-Watt, T12, 1160-Millimeter, Rapid-Start Fluorescent Lamp

This standard data sheet is fully compatible with IEC Publication 81.

Lamp description

Lamp abbreviation 40W/1160mmT12/RS
Nominal wattage ..... 40 watts
Nominal overall length ..... 1160 mm
Bulb designation T12 (T38)
Base ..... G13, Medium bipin
Circuit application ..... Rapid start

Dimensional characteristics (definitions of Part II apply)

	Inches		Millimeters	
	Min	Max	Min	Max
A (Base face to base face)	–	45.67	–	1160.0
B (Base face to end of opposite base pin)	45.85	45.95	1164.6	1167.1
C (End of base pin to end of opposite pin end)	–	46.23	–	1174.2
D (Bulb, outside diameter)	1.41	1.59	35.8	40.4

Electrical characteristics

Lamp operating characteristics (conditions of clause 11 apply)
Wattage
Arc wattage (W) 38.0
Approximate cathode wattage
(with 3.6 V on each cathode) (W) 2.0
Total wattage (W) 40.0
Voltage (V) 98
Current (A) 0.432

Reference ballast characteristics
Rated input voltage (V) 236
Reference current (A) 0.430
Impedance (ohms) 439

Cathode characteristics
Type ..... Low resistance
Resistance (at 3.6 V)
Objective (ohms) 9.6
Minimum (ohms) 7.0

Copyright National Electrical Manufacturers Association
Provided by IHS under license with NEMA
No reproduction or networking permitted without license from IHS
Not for Resale

Information for ballast design (conditions of clause 12 apply)

Lamp starting requirements

	Single lamp	Ballasts for two lamps	Ballasts for three lamps
Voltage between lamp terminals (Note 1)			
at 50°F (10°C) and above, (Vrms) min	200	256	395
at 0°F (-17.8°C) and above, (Vrms) min	260	330	525
Voltage lamp terminal to starting aid (Note 2)			
at 50°F (10°C) and above, (Vpeak) min	240	240	280
Waveshape of starting voltage crest factor, maximum	2.0	2.0	2.0
Starting capacitor size			
minimum (μF) (at 60 Hz)		0.04	0.04
maximum (μF) (at 60 Hz)		0.06	0.06

NOTES

1 These values are for lead circuits only. For lag circuits, add 3%.

2 These values are for crest factors of 1.55 to 2.0. Add 10% for crest factors less than 1.55.

Cathode heat requirements

Rapid start

Voltage	3.6 V nominal
Limits during operation	2.5 V min, 4.0 V max
Dummy load resistor	9.6 ohms ± 0.1 ohm
Voltage across dummy load	3.4 V min, 4.5 V max

Copyright National Electrical Manufacturers Association
Provided by IHS under license with NEMA
No reproduction or networking permitted without license from IHS
Not for Resale

40-Watt, 48-Inch T12, Rapid-Start Fluorescent Lamp

This standard data sheet is fully compatible with IEC Publication 81.

Lamp description

Lamp abbreviation 40W/48T12/RS
Nominal wattage ..... 40 watts
Nominal overall length ..... 48 in (1200 mm)
Bulb Designation T12 (T38)
Base ..... G13, Medium bipin
Circuit application ..... Rapid start and preheat (switch)-start

Dimensional characteristics (definitions of Part II apply)

	Inches		Millimeters	
	Min	Max	Min	Max
A (Base face to base face)	–	47.22	–	1199.4
B (Base face to end of opposite base pin)	47.40	47.50	1204.0	1206.5
C (End of base pin to end of opposite pin end)	47.67	47.78	1210.8	1213.6
D (Bulb, outside diameter)	1.41	1.59	35.8	40.4

Electrical characteristics

Lamp operating characteristics (conditions of clause 11 apply)

Wattage
- Arc wattage (W) 39.0
- Approximate cathode wattage (with 3.6 V on each cathode) (W) 2.0
- Total wattage (W) 41.0

Voltage (V) 101
Current (A) 0.430

Reference ballast characteristics

Rated input voltage (V) 236
Reference current (A) 0.430
Impedance (ohms) 439

Cathode characteristics

Type ..... Low resistance
Resistance (at 3.6 V)
- Objective (ohms) 9.6
- Minimum (ohms) 7.0

Copyright National Electrical Manufacturers Association
Provided by IHS under license with NEMA
No reproduction or networking permitted without license from IHS
Not for Resale

Information for ballast design (conditions of clause 12 apply)

Lamp starting requirements

	Single lamp	Ballasts for two lamps	Ballasts for three lamps
Rapid start			
Voltage between lamp terminals (Note 1)			
at 50°F (10°C) and above, (Vrms) min	200	256	395
at 50°F (10°C) and above, (Vrms) max	260	330	525
Voltage lamp terminal to starting aid (Note 2)			
at 50°F (10°C) and above, (Vpeak) min	240	240	280
Waveshape of starting voltage crest factor, maximum	2.0	2.0	2.0
Starting capacitor size			
minimum (μF) (at 60 Hz)		0.04	0.04
maximum (μF) (at 60 Hz)		0.06	0.06
Preheat (switch) start			
Voltage between lamp terminals			
at 50°F (10°C) and above, (Vrms) min	176		
at 50°F (10°C) and above, (Vrms) max	230		
at 50°F (10°C) and above, (Vpeak) max	375		
Voltage lamp terminal to ground			
(Vrms) max (Note 3)	135		

NOTES

1 These values are for lead circuits only. For lag circuits, add 3%.
2 These values are for crest factors of 1.55 to 2.0. Add 10% for crest factors less than 1.55.
3 Applies unless other means are provided to avoid instant starting.

Cathode heat requirements

Rapid start

Voltage	3.6 V nominal
Limits during operation	2.5 V min, 4.0 V max
Dummy load resistor	9.6 ohms ± 0.1 ohm
Voltage across dummy load	3.4 V min, 4.5 V max

Preheat (switch) start

Current during preheat, at rated primary voltage	0.55 A min, 0.75 A max
Preheat time at 0.65-A preheat current	1.0 s min

Copyright National Electrical Manufacturers Association
Provided by IHS under license with NEMA
No reproduction or networking permitted without license from IHS
Not for Resale

40-Watt, U-Shaped, 3-5/8-Inch Center T12, Rapid-Start Fluorescent Lamp

Lamp description

Lamp abbreviation 40W/23T12/U3/RS
Nominal wattage ..... 40 watts
Nominal overall length ..... 23 in (584 mm)
Bulb designation ..... T12 (T38), U-shaped
Base 2G13-92
Circuit application ..... Rapid start

Dimensional characteristics (definitions of Part II apply)

	Inches		Millimeters	
	Min	Max	Min	Max
A (Lamp legs, center to center, nominal)	3-5/8	3-5/8	92	92
B (Base face to lamp end)	22.13	22.53	562.1	572.3
C (Bulb diameter in bend)	1.33	1.63	33.8	41.4
D (Bulb diameter in legs)	1.41	1.59	35.8	40.4
E (Distance between legs)	1.96	–	49.7	–
F (Distance to outside of legs)	–	5.30	–	134.5
G (Base face to beginning of Dimension H)	1.0	–	25.4	–
H (Length over which Dimensions D, E, and F apply)	16.0	–	406.4	–

Lamp legs shall be in the same plane over the unbent portion of the lamp; maximum deviation = 0.13 in (3.3 mm).

Electrical characteristics

Lamp operating characteristics (conditions of clause 11 apply)
Wattage
Arc wattage (W) 39.0
Approximate cathode wattage
(with 3.6 V on each cathode) (W) 2.0
Total wattage (W) 41.0
Voltage (V) 103
Current (A) 0.420

Reference ballast characteristics
Rated input voltage (V) 236
Reference current (A) 0.430
Impedance (ohms) 439

Copyright National Electrical Manufacturers Association
Provided by IHS under license with NEMA
No reproduction or networking permitted without license from IHS
Not for Resale

Cathode characteristics

Type.....Low resistance

Resistance (at 3.6 V)

Objective (ohms).....9.6

Minimum (ohms).....7.0

Information for ballast design (conditions of clause 12 apply)

Lamp starting requirements

	Single lamp	Ballasts for two lamps	Ballasts for three lamps
Voltage between lamp terminals (Note 1)			
at 50°F (10°C) and above, (Vrms) min	200	256	395
at 50°F (10°C) and above, (Vrms) max	260	330	525
Voltage lamp terminal to starting aid (Note 2)			
at 50°F (10°C) and above, (Vpeak) min	280	240	280
Waveshape of starting voltage crest factor, maximum	2.0	2.0	2.0
Starting capacitor size			
minimum (μF) (at 60 Hz)		0.04	0.04
maximum (μF) (at 60 Hz)		0.06	0.06

NOTES

1 These values are for lead circuits only. For lag circuits, add 3%.

2 These values are for crest factors of 1.55 to 2.0. Add 10% for crest factors less than 1.55.

Cathode heat requirements

Rapid start

Voltage ..... 3.6 V nominal

Limits during operation..... 2.5 V min, 4.0 V max

Dummy load resistor ..... 9.6 ohms ± 0.1 ohm

Voltage across dummy load ..... 3.4 V min, 4.5 V max

Copyright National Electrical Manufacturers Association
Provided by IHS under license with NEMA
No reproduction or networking permitted without license from IHS
Not for Resale

40-Watt, U-Shaped, 6-Inch Center T12, Rapid-Start Fluorescent Lamp

Lamp description

Lamp abbreviation 40W/23T12/U6/RS
Nominal wattage ..... 40 watts
Nominal overall length ..... 23 in (584 mm)
Bulb designation ..... T12 (T38), U-shaped
Base 2G13-152
Circuit application ..... Rapid start

Dimensional characteristics (definitions of Part II apply)

	Inches		Millimeters	
	Min	Max	Min	Max
A (Lamp legs, center to center, nominal)	6	6	152	152
B (Base face to lamp end)	22.25	22.60	565.2	574.0
C (Bulb diameter in bend)	1.33	1.63	33.8	41.4
D (Bulb diameter in legs)	1.41	1.59	35.8	40.4
E (Distance between legs)	4.30	–	109.2	–
F (Distance to outside of legs)	–	7.70	–	195.6
G (Base face to beginning of Dimension H)	1.0	–	25.4	–
H (Length over which Dimensions D, E, and F apply)	16.0	–	406.4	–

Lamp legs shall be in the same plane over the unbent portion of the lamp; maximum deviation = 0.13 in (3.3 mm).

Electrical characteristics

Lamp operating characteristics (conditions of clause 11 apply)

Wattage
- Arc wattage (W) 38.5
- Approximate cathode wattage (with 3.6 V on each cathode) (W) 2.0
- Total wattage (W) 40.5

Voltage (V) 100
Current (A) 0.430

Reference ballast characteristics

Rated input voltage (V) 236
Reference current (A) 0.430
Impedance (ohms) 439

Copyright National Electrical Manufacturers Association
Provided by IHS under license with NEMA
No reproduction or networking permitted without license from IHS
Not for Resale

Cathode characteristics

Type.....Low resistance
Resistance (at 3.6 V)
  Objective (ohms).....9.6
  Minimum (ohms).....7.0

Information for ballast design (conditions of clause 12 apply)

Lamp starting requirements

	Single lamp	Ballasts for two lamps	Ballasts for three lamps
Voltage between lamp terminals (Note 1)			
at 50°F (10°C) and above, (Vrms) min	200	256	395
at 50°F (10°C) and above, (Vrms) max	260	330	525
Voltage lamp terminal to starting aid (Note 2)			
at 50°F (10°C) and above, (Vpeak) min	280	240	280
Waveshape of starting voltage crest factor, maximum	2.0	2.0	2.0
Starting capacitor size			
minimum (μF) (at 60 Hz)		0.04	0.04
maximum (μF) (at 60 Hz)		0.06	0.06

NOTES

1 These values are for lead circuits only. For lag circuits, add 3%.
2 These values are for crest factors of 1.55 to 2.0. Add 10% for crest factors less than 1.55.

Cathode heat requirements

Rapid start

Voltage ..... 3.6 V nominal
Limits during operation ..... 2.5 V min, 4.0 V max
Dummy load resistor ..... 9.6 ohms ± 0.1 ohm
Voltage across dummy load ..... 3.4 V min, 4.5 V max

Copyright National Electrical Manufacturers Association
Provided by IHS under license with NEMA
No reproduction or networking permitted without license from IHS
Not for Resale

50-Watt, 36-Inch T12, 0.800-Ampere, Rapid-Start Fluorescent Lamp

Lamp description

Lamp abbreviation 50W/36T12/HO
Nominal wattage ..... 50 watts
Nominal overall length ..... 36 in (900 mm)
Bulb designation T12 (T38)
Base ..... R17d, Recessed double contact
Circuit application ..... Rapid start, 0.8 A

Dimensional characteristics (definitions of Part II apply)

	Inches		Millimeters	
	Min	Max	Min	Max
C (Ends of opposite base bosses)	33.72	33.91	856.5	861.3
D (Bulb, outside diameter)	1.41	1.59	35.8	40.4

Electrical characteristics

Lamp operating characteristics (conditions of clause 11 apply)
Wattage
- Arc wattage (W) 43.0
- Approximate cathode wattage (with 3.6 V on each cathode) (W) 7.0
- Total wattage (W) 50.0

Voltage (V) 59
Current (A) 0.800

Reference ballast characteristics
Rated input voltage (V) 230
Reference current (A) 0.800
Impedance (ohms) 260

Cathode characteristics
Type ..... Low resistance
Resistance (at 3.6 V)
- Objective (ohms) 3.2
- Minimum (ohms) 2.5

Copyright National Electrical Manufacturers Association
Provided by IHS under license with NEMA
No reproduction or networking permitted without license from IHS
Not for Resale

Information for ballast design (conditions of clause 12 apply)

Lamp starting requirements

	Single lamp	Ballasts for two lamps	Ballasts for three lamps
Voltage between lamp terminals (Note 1)			
at 50°F (10°C) and above, (Vrms) min.	115	195	300
at 0°F (-17.8°C) and above, (Vrms) min	155	235	340
at -20°F (-28.9°C) and above, (Vrms) min	190	260	360
Voltage lamp terminal to starting aid (Note 2)			
at 50°F (10°C) and above, (Vpeak) min	325	325	325
at 0°F (-17.8°C) and above, (Vpeak) min	600	600	600
at -20°F (-28.9°C) and above, (Vpeak) min	700	700	700
Waveshape of starting voltage crest factor, maximum	2.0	2.0	2.0
Starting capacitor size			
minimum (μF) (at 60 Hz)		0.06	0.06
maximum (μF) (at 60 Hz)		0.12	0.12

NOTES

1 These values are for lead circuits only. For lag circuits, add 6%.

2 These values are for crest factors of 1.55 to 2.0. Add 10% for crest factors less than 1.55.

Cathode heat requirements

Rapid start

Voltage	3.6 V nominal
Limits during operation	3.0 V min, 4.0 V max
Dummy load resistor	3.2 ohms ± 0.05 ohm
Voltage across dummy load	3.4 V min, 4.5 V max

Copyright National Electrical Manufacturers Association
Provided by IHS under license with NEMA
No reproduction or networking permitted without license from IHS
Not for Resale

63-Watt, 48-Inch T12, 0.800-Ampere and 1.0-Ampere, Rapid-Start Fluorescent Lamp

This standard data sheet is fully compatible with IEC Publication 81.

Lamp description

Lamp abbreviation 63W/48T12/HO
Nominal wattage ..... 63 watts at 0.800 A, 71 watts at 1.0 A
Nominal overall length ..... 48 in (1200 mm)
Bulb designation T12 (T38)
Base ..... R17d, Recessed double contact
Circuit application ..... Rapid start, 0.8 A and 1.0 A

Dimensional characteristics (definitions of Part II apply)

	Inches		Millimeters	
	Min	Max	Min	Max
C (Ends of opposite base bosses)	45.72	45.91	1161.3	1166.1
D (Bulb, outside diameter)	1.41	1.59	35.8	40.4

Electrical characteristics

Lamp operating characteristics (conditions of clause 11 apply)

Wattage	At 0.800 A	At 1.000 A
Arc wattage (W)	56.0	64.0
Approximate cathode wattage (with 3.6 V on each cathode) (W)	7.0	7.0
Total wattage (W)	63.0	71.0
Voltage (V)	78.0	71.0
Current (A)	0.800	1.000

Reference ballast characteristics

Rated input voltage (V)	230	230
Reference current (A)	0.800	1.000
Impedance (ohms)	244	200

Cathode characteristics

Type ..... Low resistance
Resistance (at 3.6 V)
Objective (ohms) 3.2
Minimum (ohms) 2.5

Copyright National Electrical Manufacturers Association
Provided by IHS under license with NEMA
No reproduction or networking permitted without license from IHS
Not for Resale

Information for ballast design (conditions of clause 12 apply)

Lamp starting requirements

	Single lamp	Ballasts for two lamps	Ballasts for three lamps
Voltage between lamp terminals (Note 1)			
at 50°F (10°C) and above, (Vrms) min	155	256	385
at 0°F (-17.8°C) and above, (Vrms) min	203	290	405
at -20°F (-28.9°C) and above, (Vrms) min	240	310	405
Voltage lamp terminal to starting aid (Note 2)			
at 50°F (10°C) and above, (Vpeak) min	325	325	325
at 0°F (-17.8°C) and above, (Vpeak) min	600	600	600
at -20°F (-28.9°C) and above, (Vpeak) min	700	700	700
Waveshape of starting voltage crest factor, maximum	2.0	2.0	2.0
Starting capacitor size			
minimum (μF) (at 60 Hz)		0.06	0.06
maximum (μF) (at 60 Hz)		0.12	0.12

NOTES

1 These values are for lead circuits only. For lag circuits, add 6%.

2 These values are for crest factors of 1.55 to 2.0. Add 10% for crest factors less than 1.55.

Cathode heat requirements

Rapid start

Voltage, during operation .....3.6 V nominal
Limits.....3.0 V min, 4.0 V max
Dummy load resistor .....3.2 ohms ± 0.05 ohm
Voltage across dummy load .....3.4 V min, 4.5 V max

Copyright National Electrical Manufacturers Association
Provided by IHS under license with NEMA
No reproduction or networking permitted without license from IHS
Not for Resale

75-Watt, 60-Inch T12, 0.800-Ampere, Rapid-Start Fluorescent Lamp

Lamp description

Lamp abbreviation 75W/60T12/HO
Nominal wattage ..... 75 watts
Nominal overall length ..... 60 in (1500 mm)
Bulb designation T12 (T38)
Base ..... R17d, Recessed double contact
Circuit application ..... Rapid start, 0.8 A

Dimensional characteristics (definitions of Part II apply)

	Inches		Millimeters	
	Min	Max	Min	Max
C (Ends of opposite base bosses)	57.72	57.91	1466.1	1470.9
D (Bulb, outside diameter)	1.41	1.59	35.8	40.4

Electrical characteristics

Lamp operating characteristics (conditions of clause 11 apply)

Wattage
- Arc wattage (W) 68.5
- Approximate cathode wattage (with 3.6 V on each cathode) (W) 7.0
- Total wattage (W) 75.5

Voltage (V) 98
Current (A) 0.800

Reference ballast characteristics

Rated input voltage (V) 300
Reference current (A) 0.800
Impedance (ohms) 325

Cathode characteristics

Type ..... Low resistance
Resistance (at 3.6 V)
- Objective (ohms) 3.2
- Minimum (ohms) 2.5

Copyright National Electrical Manufacturers Association
Provided by IHS under license with NEMA
No reproduction or networking permitted without license from IHS
Not for Resale

Information for ballast design (conditions of clause 12 apply)

Lamp starting requirements

	Single lamp	Ballasts for two lamps	Ballasts for three lamps
Voltage between lamp terminals (Note 1)			
at 50°F (10°C) and above, (Vrms) min	210	325	470
at 0°F (-17.8°C) and above, (Vrms) min	240	350	475
at -20°F (-28.9°C) and above, (Vrms) min	290	365	475
Voltage lamp terminal to starting aid (Note 2)			
at 50°F (10°C) and above, (Vpeak) min	325	325	325
at 0°F (-17.8°C) and above, (Vpeak) min	600	600	600
at -20°F (-28.9°C) and above, (Vpeak) min	700	700	700
Waveshape of starting voltage crest factor, maximum	2.0	2.0	2.0
Starting capacitor size			
minimum (μF) (at 60 Hz)		0.06	0.06
maximum (μF) (at 60 Hz)		0.12	0.12

NOTES

1 These values are for lead circuits only. For lag circuits, add 6%.

2 These values are for crest factors of 1.55 to 2.0. Add 10% for crest factors less than 1.55.

Cathode heat requirements

Rapid start

Voltage	3.6 V nominal
Limits during operation	3.0 V min, 4.0 V max
Dummy load resistor	3.2 ohms ± 0.05 ohm
Voltage across dummy load	3.4 V min, 4.5 V max

Copyright National Electrical Manufacturers Association
Provided by IHS under license with NEMA
No reproduction or networking permitted without license from IHS
Not for Resale

87-Watt, 72-Inch T12, G20 Base, 0.800-Ampere and 1.0-Ampere, Rapid-Start Fluorescent Lamp

Lamp description

Lamp abbreviation 87W/72T12/HO
Nominal wattage ..... 87 watts at 0.800 A, 101 watts at 1.0 A
Nominal overall length ..... 72 in (1800 mm)
Bulb designation T12 (T38)
Base ..... G20, Mogul bipin
Circuit application ..... Rapid start, 0.8 A and 1.0 A

Dimensional characteristics (definitions of Part II apply)

	Inches		Millimeters	
	Min	Max	Min	Max
A (Base face to base face)	–	70.30	–	1785.6
B (Base face to end of opposite base pin)	70.72	70.93	1796.3	1801.6
C (End of base pin to end of opposite pin end)	–	71.56	–	1817.6
D (Bulb, outside diameter)	1.41	1.59	35.7	40.5

Electrical characteristics

Lamp operating characteristics (conditions of clause 11 apply)

Wattage	At 0.800 A	At 1.000 A
Arc wattage (W)	80.0	94.0
Approximate cathode wattage (with 3.6 V on each cathode) (W)	7.0	7.0
Total wattage (W)	87.0	101.0
Voltage (V)	117.0	108.0
Current (A)	0.780	0.985

Reference ballast characteristics

Rated input voltage (V)	300	300.0
Reference current (A)	0.800	1.000
Impedance (ohms)	315	257

Cathode characteristics

Type ..... Low resistance
Resistance (at 3.6 V)
Objective (ohms) 3.2
Minimum (ohms) 2.5

Copyright National Electrical Manufacturers Association
Provided by IHS under license with NEMA
No reproduction or networking permitted without license from IHS
Not for Resale

Information for ballast design (conditions of clause 12 apply)

Lamp starting requirements

	Single lamp	Ballasts for two lamps	Ballasts for three lamps
Voltage between lamp terminals (Note 1)			
at 50°F (10°C) and above, (Vrms) min	260	395	550
at 0°F (-17.8°C) and above, (Vrms) min	283	410	550
at -20°F (-28.9'°) and above, (Vrms) min	340	420	550
Voltage lamp terminal to starting aid (Note 2)			
at 50°F (10°C) and above, (Vpeak) min	325	325	325
at 0°F (-17.8°C) and above, (Vpeak) min	600	600	600
at -20°F (-28.9°C) and above, (Vpeak) min	700	700	700
Waveshape of starting voltage crest factor, maximum	2.0	2.0	2.0
Starting capacitor size			
minimum (μF) (at 60 Hz)		0.06	0.06
maximum (μF) (at 60 Hz)		0.12	0.12

NOTES

1 These values are for lead circuits only. For lag circuits, add 6%.

2 These values are for crest factors of 1.55 to 2.0. Add 10% for crest factors less than 1.55.

Cathode heat requirements

Rapid start

Voltage	3.6 V nominal
Limits during operation	3.0 V min, 4.0 V max
Dummy load resistor	3.2 ohms ± 0.05 ohm
Voltage across dummy load	3.4 V min, 4.5 V max

Copyright National Electrical Manufacturers Association
Provided by IHS under license with NEMA
No reproduction or networking permitted without license from IHS
Not for Resale

87-Watt, 72-Inch T12, R17d base, 0.800-Ampere and 1.0-Ampere, Rapid-Start Fluorescent Lamp

This standard data sheet is fully compatible with IEC Publication 81.

Lamp description

Lamp abbreviation 87W/72T12/HO
Nominal wattage ..... 87 watts at 0.800 A, 101 watts at 1.0 A
Nominal overall length ..... 72 in (1800 mm)
Bulb designation T12 (T38)
Base ..... R17d, Recessed double contact
Circuit application ..... Rapid start, 0.8 A and 1.0 A

Dimensional characteristics (definitions of Part II apply)

	Inches		Millimeters	
	Min	Max	Min	Max
C (Ends of opposite base bosses)	69.72	69.91	1770.9	1775.7
D (Bulb, outside diameter)	1.41	1.59	35.8	40.4

Electrical characteristics

Lamp operating characteristics (conditions of clause 11 apply)

Wattage	At 0.800 A	At 1.000 A
Arc wattage (W)	80.0	94.0
Approximate cathode wattage (with 3.6 V on each cathode) (W)	7.0	7.0
Total wattage (W)	87.0	101.0
Voltage (V)	117.0	108.0
Current (A)	0.780	0.985

Reference ballast characteristics

Rated input voltage (V)	300	300
Reference current (A)	0.800	1.000
Impedance (ohms)	315	257

Cathode characteristics

Type ..... Low resistance
Resistance (at 3.6 V)
Objective (ohms) 3.2
Minimum (ohms) 2.5

Copyright National Electrical Manufacturers Association
Provided by IHS under license with NEMA
No reproduction or networking permitted without license from IHS
Not for Resale

Information for ballast design (conditions of clause 12 apply)

Lamp starting requirements

	Single lamp	Ballasts for two lamps	Ballasts for three lamps
Voltage between lamp terminals (Note 1)			
at 50°F (10°C) and above, (Vrms) min	260	395	550
at 0°F (-17.8°C) and above, (Vrms) min	283	410	550
at -20°F (-28.9°C) and above, (Vrms) min	340	420	550
Voltage lamp terminal to starting aid (Note 2)			
at 50°F (10°C) and above, (Vpeak) min	325	325	325
at 0°F (-17.8°C) and above, (Vpeak) min	600	600	600
at -20°F (-28.9°C) and above, (Vpeak) min	700	700	700
Waveshape of starting voltage crest factor, maximum	2.0	2.0	2.0
Starting capacitor size			
minimum (μF) (at 60 Hz)		0.06	0.06
maximum (μF) (at 60 Hz)		0.12	0.12

NOTES

1 These values are for lead circuits only. For lag circuits, add 6%.

2 These values are for crest factors of 1.55 to 2.0. Add 10% for crest factors less than 1.55.

Cathode heat requirements

Rapid start

Voltage	3.6 V nominal
Limits during operation	3.0 V min, 4.0 V max
Dummy load resistor	3.2 ohms ± 0.05 ohm
Voltage across dummy load	3.4 V min, 4.5 V max

Copyright National Electrical Manufacturers Association
Provided by IHS under license with NEMA
No reproduction or networking permitted without license from IHS
Not for Resale

95-Watt, 96-Inch T12, 0.8-Ampere, Rapid-Start Fluorescent Lamp

Lamp description

Lamp abbreviation 95W/96T12/HO
Nominal wattage ..... 95 watts
Nominal overall length ..... 96 in (2400 mm)
Bulb designation T12 (T38)
Base ..... R17d, Recessed double contact
Circuit application ..... Rapid start, 0.8 A

Dimensional characteristics (definitions of Part II apply)

	Inches		Millimeters	
	Min	Max	Min	Max
C (Ends of opposite base bosses)	93.72	93.91	2380.5	2385.3
D (Bulb, outside diameter)	1.41	1.59	35.8	40.4

Electrical characteristics

Lamp operating characteristics (conditions of clause 11 apply)
Wattage
Arc wattage (W) 90.0
Approximate cathode wattage
(with 3.6 V on each cathode) (W).....7.0
Total wattage (W) 97.0
Voltage (V) 126
Current (A) 0.830

Reference ballast characteristics
Rated input voltage (V) 400
Reference current (A) 0.800
Impedance (ohms) 415

Cathode characteristics
Type.....Low resistance
Resistance (at 3.6 V)
Objective (ohms).....3.2
Minimum (ohms) 2.5

Copyright National Electrical Manufacturers Association
Provided by IHS under license with NEMA
No reproduction or networking permitted without license from IHS
Not for Resale

Information for ballast design (conditions of clause 12 apply)

Lamp starting requirements

	Single lamp	Ballasts for two lamps	Ballasts for three lamps
Voltage between lamp terminals (Note 1)			
at 60°F (15.5°C) and above, (Vrms) min	to be determined	465	660
Voltage lamp terminal to starting aid (Note 2)			
at 60°F (15.5°C) and above, (Vpeak) min	600	600	600
Waveshape of starting voltage crest factor, maximum	2.0	2.0	2.0
Lamp current crest factor, maximum	1.90	1.90	1.90
Starting capacitor size			
minimum (μF) (at 60 Hz)		0.06	0.06
maximum (μF) (at 60 Hz)		0.12	0.12

NOTES

1 These values are for lead circuits only. For lag circuits, add 6%.

2 These values are for crest factors of 1.55 to 2.0. Add 10% for crest factors less than 1.55.

Cathode heat requirements

Rapid start

Voltage	3.6 V nominal
Limits during operation	3.0 V min, 4.0 V max
Dummy load resistor	3.2 ohms ± 0.05 ohm
Voltage across dummy load	3.4 V min, 4.5 V max

Copyright National Electrical Manufacturers Association
Provided by IHS under license with NEMA
No reproduction or networking permitted without license from IHS
Not for Resale

100-Watt, 84-Inch T12, 0.800-Ampere, Rapid-Start Fluorescent Lamp

Lamp description

Lamp abbreviation 100W/84T12/HO
Nominal wattage ..... 100 watts
Nominal overall length ..... 84 in (2100 mm)
Bulb designation T12 (T38)
Base ..... R17d, Recessed double contact
Circuit application ..... Rapid start, 0.8 A

Dimensional characteristics (definitions of Part II apply)

	Inches		Millimeters	
	Min	Max	Min	Max
C (Ends of opposite base bosses)	81.72	81.91	2075.7	2080.5
D (Bulb, outside diameter)	1.41	1.59	35.8	40.4

Electrical characteristics

Lamp operating characteristics (conditions of clause 11 apply)

Wattage
- Arc wattage (W) 93.0
- Approximate cathode wattage (with 3.6 V on each cathode) (W) 7.0
- Total wattage (W) 100.0

Voltage (V) 135
Current (A) 0.800

Reference ballast characteristics

Rated input voltage (V) 400
Reference current (A) 0.800
Impedance (ohms) 430

Cathode characteristics

Type ..... Low resistance
Resistance (at 3.6 V)
- Objective (ohms) 3.2
- Minimum (ohms) 2.5

Copyright National Electrical Manufacturers Association
Provided by IHS under license with NEMA
No reproduction or networking permitted without license from IHS
Not for Resale

Information for ballast design (conditions of clause 12 apply)

Lamp starting requirements

	Single lamp	Ballasts for two lamps	Ballasts for three lamps
Voltage between lamp terminals (Note 1)			
at 50°F (10°C) and above, (Vrms) min	280	430	605
at 0°F (-17.8°C) and above, (Vrms) min	330	445	605
at -20°F (-28.9°C) and above, (Vrms) min	360	455	605
Voltage lamp terminal to starting aid (Note 2)			
at 50°F (10°C) and above, (Vpeak) min	325	325	325
at 0°F (-17.8°C) and above, (Vpeak) min	600	600	600
at -20°F (-28.9°C) and above, (Vpeak) min	700	700	700
Waveshape of starting voltage			
crest factor, maximum	2.0	2.0	2.0
Starting capacitor size			
minimum (μF) (at 60 Hz)		0.06	0.06
maximum (μF) (at 60 Hz)		0.12	0.12

NOTES

1 These values are for lead circuits only. For lag circuits, add 6%.

2 These values are for crest factors of 1.55 to 2.0. Add 10% for crest factors less than 1.55.

Cathode heat requirements

Rapid start

Voltage	3.6 V nominal
Limits during operation	3.0 V min, 4.0 V max
Dummy load resistor	3.2 ohms ± 0.05 ohm
Voltage across dummy load	3.4 V min, 4.5 V max

Copyright National Electrical Manufacturers Association
Provided by IHS under license with NEMA
No reproduction or networking permitted without license from IHS
Not for Resale

113-WATT 96-INCH T12, 0.800-AMPERE AND 1.0-AMPERE, RAPID-START FLUORESCENT LAMP

This standard data sheet is fully compatible with IEC Publication 60081.

Lamp Description

Lamp Abbreviation	113W/96T12/HO
Nominal Wattage	113 Watts at 0.800 A, 128 Watts at 1.00 A
Nominal Overall Length	96 in. (2400mm)
Bulb Designation	T12 (T38)
Base	R17d, Recessed double contact
Circuit Application	Rapid Start, 0.8 A and 1.0 A, for cold temperature installation

Dimensional Characteristics (conditions of Part II apply)

	Inches		Millimeters	
	Min	Max	Min	Max
C. (Ends of opposite base bosses)	93.72	93.91	2380.5	2385.3
D. (Bulb, outside diameter)	1.41	1.59	35.8	40.4

Electrical Characteristics

Lamp Operating Characteristics (conditions of clause 11 apply)

Wattage	At 0.800 A	At 1.000 A
Arc wattage (W)	106.0	121.0
Approximate cathode wattage (with 3.6V on each cathode) (W)	7.0	7.0
Total wattage (W)	113.0	128.0
Voltage (V)	153	139
Current (A)	0.790	1.000

Reference Ballast Characteristics

Rated input voltage (V)	400	400
Reference current (A)	0.800	1.000
Impedance (ohms)	415	337

Copyright © 1998 by National Electrical Manufacturers Association
1300 North 17th Street, Suite 1847, Rosslyn, VA 22209

First Edition
April 1999

Copyright National Electrical Manufacturers Association
Provided by IHS under license with NEMA
No reproduction or networking permitted without license from IHS
Not for Resale

Cathode Characteristics

Type ..... Low resistance
Resistance (at 3.6V)
  Objective (ohms) 3.2
  Minimum (ohms) 2.5

Information for Ballast Design (conditions of clause 12 apply)

Lamp Starting Requirements

	Single Lamp	Ballasts for Two Lamps	Ballasts for Three Lamps
Voltage between lamp terminals (Note 1)			
at 50°F (10°C) and above, (Vrms) min.	295	465	660
at 0°F (-17.8°C) and above, (Vrms) min	330	480	660
at -20°F (-28.9°C) and above, (Vrms) min.	360	490	660
Voltage lamp terminal to starting aid (Note 2)			
at 50°F (10°C) and above, (Vpeak) min	325	325	325
at 0°F (-17.8°C) and above, (Vpeak) min	600	600	600
at -20°F (-28.9°C) and above, (Vpeak) min.	700	700	700
Waveshape of starting voltage crest factor, maximum	2.0	2.0	2.0
Starting capacitor size			
minimum (μF) (at 60 Hz)		0.06	0.06
maximum (μF) (at 60 Hz)		0.12	0.12

NOTES:
1. These values are for lead circuits only. For lag circuits, add 6%.
2. These values are for crest factors of 1.55 to 2.0. Add 10% for crest factors less than 1.55.

Cathode Heat Requirements

Rapid Start

Voltage ..... 3.6 V nominal
Limits during operation ..... 3.0 V min., 4.0 V max.
Dummy load resistor ..... 3.2 ohms ± 0.05 ohms
Voltage across dummy load ..... 3.4 V min., 4.5 V max.

Copyright © 1998 by National Electrical Manufacturers Association
1300 North 17th Street, Suite 1847, Rosslyn, VA 22209

Copyright National Electrical Manufacturers Association
Provided by IHS under license with NEMA
No reproduction or networking permitted without license from IHS
Not for Resale

116-Watt, 48-Inch T12, 1.5-Ampere, Rapid-Start Fluorescent Lamp

Lamp description

Lamp abbreviation ..... 116W/48T12/1.5 A
Nominal wattage ..... 116 watts
Nominal overall length ..... 48 in (1200 mm)
Bulb designation T12 (T38)
Base ..... R17d, Recessed double contact
Circuit application ..... Rapid start, 1.5 A

Dimensional characteristics (definitions of Part II apply)

	Inches		Millimeters	
	Min	Max	Min	Max
C (Ends of opposite base bosses)	45.72	45.91	1161.3	1166.1
D (Bulb, outside diameter)	1.41	1.59	35.8	40.4

Electrical characteristics

Lamp operating characteristics (conditions of clause 11 apply)
Wattage
- Arc wattage (W) 109.0
- Approximate cathode wattage (with 3.6 V on each cathode) (W) 7.0
- Total wattage (W) 116.0

Voltage (V) 84
Current (A) 1.500

Reference ballast characteristics
Rated input voltage (V) 300
Reference current (A) 1.500
Impedance (ohms) 179

Cathode characteristics
Type ..... Low resistance
Resistance (at 3.6 V)
- Objective (ohms) 3.2
- Minimum (ohms) 2.0

Copyright National Electrical Manufacturers Association
Provided by IHS under license with NEMA
No reproduction or networking permitted without license from IHS
Not for Resale

Information for ballast design (conditions of clause 12 apply)

Lamp starting requirements

	Single lamp	Ballasts for two lamps	Ballasts for three lamps
Voltage between lamp terminals (Note 1)			
at 50°F (10°C) and above, (Vrms) min	160	250	350
at 0°F (-17.8°C) and above, (Vrms) min	205	265	350
at -20°F (-28.9°C) and above, (Vrms) min	240	300	385
Voltage lamp terminal to starting aid (Note 2)			
at 50°F (10°C) and above, (Vpeak) min	400	400	400
at 0°F (-17.8°C) and above, (Vpeak) min	575	575	575
at -20°F (-28.9°C) and above, (Vpeak) min	650	650	650
Waveshape of starting voltage crest factor, maximum	2.0	2.0	2.0
Starting capacitor size			
minimum (μF) (at 60 Hz)		0.06	0.06
maximum (μF) (at 60 Hz)		0.12	0.12

NOTES

1 These values are for lead circuits only. For lag circuits, add 10%.

2 These values are for crest factors of 1.55 to 2.0. Add 10% for crest factors less than 1.55.

Cathode heat requirements

Rapid start

Voltage	3.6 V nominal
Limits during operation	3.3 V min, 4.3 V max
Dummy load resistor	3.2 ohms ± 0.05 ohm
Voltage across dummy load	3.4 V min, 4.5 V max

Copyright National Electrical Manufacturers Association
Provided by IHS under license with NEMA
No reproduction or networking permitted without license from IHS
Not for Resale

116-Watt, 48-Inch PG17, 1.5-Ampere, Rapid-Start Fluorescent Lamp

Lamp description

Lamp abbreviation ..... 116W/48PG17/1.5 A
Nominal Wattage ..... 116 watts
Nominal overall length ..... 48 in (1200 mm)
Bulb designation TD17 (TD54)
Base ..... R17d, Recessed double contact
Circuit application ..... Rapid start, 1.5 A

Dimensional characteristics (definitions of Part II apply)

	Inches		Millimeters	
	Min	Max	Min	Max
C (Ends of opposite base bosses)	45.72	45.91	1161.3	1166.1
D (Bulb, outside diameter)	2.00	2.22	50.8	56.4

Electrical characteristics

Lamp operating characteristics (conditions of clause 11 apply)

Wattage
- Arc wattage (W) 109.0
- Approximate cathode wattage (with 3.6 V on each cathode) (W) 7.0
- Total wattage (W) 116.0

Voltage (V) 84
Current (A) 1.500

Reference ballast characteristics

Rated input voltage (V) 300
Reference current (A) 1.500
Impedance (ohms) 179

Cathode characteristics

Type ..... Low resistance
Resistance (at 3.6 V)
- Objective (ohms) 3.2
- Minimum (ohms) 2.0

Copyright National Electrical Manufacturers Association
Provided by IHS under license with NEMA
No reproduction or networking permitted without license from IHS
Not for Resale

Information for ballast design (conditions of clause 12 apply)

Lamp starting requirements

	Single lamp	Ballasts for two lamps	Ballasts for three lamps
Voltage between lamp terminals (Note 1)			
at 50°F (10°C) and above, (Vrms) min	160	250	350
at 0°F (-17.8°C) and above, (Vrms) min	205	265	350
at -20°F (-28.9°C) and above, (Vrms) min	240	300	385
Voltage lamp terminal to starting aid (Note 2)			
at 50°F (10°C) and above, (Vpeak) min	400	400	400
at 0°F (-17.8°C) and above, (Vpeak) min	575	575	575
at -20°F (-28.9°C) and above, (Vpeak) min	650	650	650
Waveshape of starting voltage crest factor, maximum	2.0	2.0	2.0
Starting capacitor size			
minimum (μF) (at 60 Hz)		0.06	0.06
maximum (μF) (at 60 Hz)		0.12	0.12

NOTES

1 These values are for lead circuits only. For lag circuits, add 10%.

2 These values are for crest factors of 1.55 to 2.0. Add 10% for crest factors less than 1.55.

Cathode heat requirements

Rapid start

Voltage	3.6 V nominal
Limits during operation	3.3 V min, 4.3 V max
Dummy load resistor	3.2 ohms ± 0.05 ohm
Voltage across dummy load	3.4 V min, 4.5 V max

Copyright National Electrical Manufacturers Association
Provided by IHS under license with NEMA
No reproduction or networking permitted without license from IHS
Not for Resale

168-Watt, 72-Inch T12, 1.5-Ampere, Rapid-Start Fluorescent Lamp

Lamp description

Lamp abbreviation ..... 168W/72T12/1.5 A
Nominal wattage ..... 168 watts
Nominal overall length ..... 72 in (1800 mm)
Bulb designation T12 (T38)
Base ..... R17d, Recessed double contact
Circuit application ..... Rapid start, 1.5 A

Dimensional characteristics (definitions of Part II apply)

	Inches		Millimeters	
	Min	Max	Min	Max
C (Ends of opposite base bosses)	69.72	69.91	1770.9	1775.7
D (Bulb, outside diameter)	1.41	1.59	35.8	40.4

Electrical characteristics

Lamp operating characteristics (conditions of clause 11 apply)

Wattage
- Arc wattage (W) 161.0
- Approximate cathode wattage (with 3.6 V on each cathode) (W) 7.0
- Total wattage (W) 168.0

Voltage (V) 125
Current (A) 1.520

Reference ballast characteristics

Rated input voltage (V) 350
Reference current (A) 1.500
Impedance (ohms) 197

Cathode characteristics

Type ..... Low resistance
Resistance (at 3.6 V)
- Objective (ohms) 3.2
- Minimum (ohms) 2.0

Copyright National Electrical Manufacturers Association
Provided by IHS under license with NEMA
No reproduction or networking permitted without license from IHS
Not for Resale

Information for ballast design (conditions of clause 12 apply)

Lamp starting requirements

	Single lamp	Ballasts for two lamps	Ballasts for three lamps
Voltage between lamp terminals (Note 1)			
at 50°F (10°C) and above, (Vrms) min	225	350	500
at 0°F (-17.8°C) and above, (Vrms) min	270	360	500
at -20°F (-28.9°C) and above, (Vrms) min	310	400	535
Voltage lamp terminal to starting aid (Note 2)			
at 50°F (10°C) and above, (Vpeak) min	400	400	400
at 0°F (-17.8°C) and above, (Vpeak) min	575	575	575
at -20°F (-28.9°C) and above, (Vpeak) min	650	650	650
Waveshape of starting voltage crest factor, maximum	2.0	2.0	2.0
Starting capacitor size			
minimum (μF) (at 60 Hz)		0.06	0.06
maximum (μF) (at 60 Hz)		0.12	0.12

NOTES

1 These values are for lead circuits only. For lag circuits, add 10%.

2 These values are for crest factors of 1.55 to 2.0. Add 10% for crest factors less than 1.55.

Cathode heat requirements

Rapid start

Voltage	3.6 V nominal
Limits during operation	3.3 V min, 4.3 V max
Dummy load resistor	3.2 ohms ± 0.05 ohm
Voltage across dummy load	3.4 V min, 4.5 V max

Copyright National Electrical Manufacturers Association
Provided by IHS under license with NEMA
No reproduction or networking permitted without license from IHS
Not for Resale

168-Watt, 72-Inch PG17, 1.5-Ampere, Rapid-Start Fluorescent Lamp

Lamp description

Lamp abbreviation ..... 168W/72PG17/1.5 A
Nominal wattage ..... 168 watts
Nominal overall length ..... 72 in (1800 mm)
Bulb designation TD17 (TD54)
Base ..... R17d, Recessed double contact
Circuit application ..... Rapid start, 1.5 A

Dimensional characteristics (definitions of Part II apply)

	Inches		Millimeters	
	Min	Max	Min	Max
C (Ends of opposite base bosses)	69.72	69.91	1770.9	1775.7
D (Bulb, outside diameter)	2.00	2.22	50.8	56.4

Electrical characteristics

Lamp operating characteristics (conditions of clause 11 apply)

Wattage
- Arc wattage (W) 161.0
- Approximate cathode wattage (with 3.6 V on each cathode) (W) 7.0
- Total wattage (W) 168.0

Voltage (V) 125
Current (A) 1.520

Reference ballast characteristics

Rated input voltage (V) 350
Reference current (A) 1.500
Impedance (ohms) 197

Cathode characteristics

Type ..... Low resistance
Resistance (at 3.6 V)
- Objective (ohms) 3.2
- Minimum (ohms) 2.0

Copyright National Electrical Manufacturers Association
Provided by IHS under license with NEMA
No reproduction or networking permitted without license from IHS
Not for Resale

Information for ballast design (conditions of clause 12 apply)

Lamp starting requirements

	Single lamp	Ballasts for two lamps	Ballasts for three lamps
Voltage between lamp terminals (Note 1)			
at 50°F (10°C) and above, (Vrms) min	225	350	500
at 0°F (-17.8°C) and above, (Vrms) min	270	360	500
at -20°F (-28.9°C) and above, (Vrms) min	310	400	535
Voltage lamp terminal to starting aid (Note 2)			
at 50°F (10°C) and above, (Vpeak) min	400	400	400
at 0°F (-17.8°C) and above, (Vpeak) min	575	575	575
at -20°F (-28.9°C) and above, (Vpeak) min	650	650	650
Waveshape of starting voltage crest factor, maximum	2.0	2.0	2.0
Starting capacitor size			
minimum (μF) (at 60 Hz)		0.06	0.06
maximum (μF) (at 60 Hz)		0.12	0.12

NOTES

1 These values are for lead circuits only. For lag circuits, add 10%.
2 These values are for crest factors of 1.55 to 2.0. Add 10% for crest factors less than 1.55.

Cathode heat requirements

Rapid start

Voltage	3.6 V nominal
Limits during operation	3.3 V min, 4.3 V max
Dummy load resistor	3.2 ohms ± 0.05 ohm
Voltage across dummy load	3.4 V min, 4.5 V max

Copyright National Electrical Manufacturers Association
Provided by IHS under license with NEMA
No reproduction or networking permitted without license from IHS
Not for Resale

215-Watt, 96-Inch T12, 1.5-Ampere, Rapid-Start Fluorescent Lamp

Lamp description

Lamp abbreviation ..... 215W/96T12/1.5 A
Nominal wattage ..... 215 watts
Nominal overall length ..... 96 in (2400 mm)
Bulb designation T12 (T38)
Base ..... R17d, Recessed double contact
Circuit application ..... Rapid start, 1.5 A

Dimensional characteristics (definitions of Part II apply)

	Inches		Millimeters	
	Min	Max	Min	Max
C (Ends of opposite base bosses)	93.72	93.91	2380.5	2385.3
D (Bulb, outside diameter)	1.41	1.59	35.8	40.4

Electrical characteristics

Lamp operating characteristics (conditions of clause 11 apply)
Wattage
Arc wattage (W) 208.0
Approximate cathode wattage
(with 3.6 V on each cathode) (W) 7.0
Total wattage (W) 215.0
Voltage (V) 163
Current (A) 1.500

Reference ballast characteristics
Rated input voltage (V) 400
Reference current (A) 1.500
Impedance (ohms) 215

Cathode characteristics
Type ..... Low resistance
Resistance (at 3.6 V)
Objective (ohms) 3.2
Minimum (ohms) 2.0

Copyright National Electrical Manufacturers Association
Provided by IHS under license with NEMA
No reproduction or networking permitted without license from IHS
Not for Resale

Information for ballast design (conditions of clause 12 apply)

Lamp starting requirements

	Single lamp	Ballasts for two lamps	Ballasts for three lamps
Voltage between lamp terminals (Note 1)			
at 50°F (10°C) and above, (Vrms) min	300	470	675
at 0°F (-17.8°C) and above, (Vrms) min	355	470	675
at -20°F (-28.9°C) and above, (Vrms) min	400	500	690
Voltage lamp terminal to starting aid (Note 2)			
at 50°F (10°C) and above, (Vpeak) min	400	400	400
at 0°F (-17.8°C) and above, (Vpeak) min	575	575	575
at -20°F (-28.9°C) and above, (Vpeak) min	650	650	650
Waveshape of starting voltage crest factor, maximum	2.0	2.0	2.0
Starting capacitor size			
minimum (μF) (at 60 Hz)		0.06	0.06
maximum (μF) (at 60 Hz)		0.12	0.12

NOTES

1 These values are for lead circuits only. For lag circuits, add 10%.

2 These values are for crest factors of 1.55 to 2.0. Add 10% for crest factors less than 1.55.

Cathode heat requirements

Rapid start

Voltage	3.6 V nominal
Limits during operation	3.3 V min, 4.3 V max
Dummy load resistor	3.2 ohms ± 0.05 ohm
Voltage across dummy load	3.4 V min, 4.5 V max

Additional starting requirements for ballasts for two lamps in series

At 90% of rated line voltage and with the cathode circuits for the ballasts loaded with the specified dummy load resistances, ballast shall supply a minimum of 0.725-A to a 500-ohm noninductive resistor connected across the ballast lamp leads that supply the highest voltage. The measurement shall be made at an ambient temperature of 25°C (77°F).

Copyright National Electrical Manufacturers Association
Provided by IHS under license with NEMA
No reproduction or networking permitted without license from IHS
Not for Resale

215-Watt, 96-Inch PG17, 1.5-Ampere, Rapid-Start Fluorescent Lamp

Lamp description

Lamp abbreviation ..... 215W/96PG17/1.5 A
Nominal wattage ..... 215 watts
Nominal overall length ..... 96 in (2400 mm)
Bulb designation TD17 (TD54)
Base ..... R17d, Recessed double contact
Circuit application ..... Rapid start, 1.5 A

Dimensional characteristics (definitions of Part II apply)

	Inches		Millimeters	
	Min	Max	Min	Max
C (Ends of opposite base bosses)	93.72	93.91	2380.5	2385.3
D (Bulb, outside diameter)	2.00	2.22	50.8	56.4

Electrical characteristics

Lamp operating characteristics (conditions of clause 11 apply)
Wattage
Arc wattage (W) 208.0
Approximate cathode wattage
(with 3.6 V on each cathode) (W) 7.0
Total wattage (W) 215.0
Voltage (V) 163
Current (A) 1.500

Reference ballast characteristics
Rated input voltage (V) 400
Reference current (A) 1.500
Impedance (ohms) 215

Cathode characteristics
Type ..... Low resistance
Resistance (at 3.6 V)
Objective (ohms) 3.2
Minimum (ohms) 2.0

Copyright National Electrical Manufacturers Association
Provided by IHS under license with NEMA
No reproduction or networking permitted without license from IHS
Not for Resale

Information for ballast design (conditions of clause 12 apply)

Lamp starting requirements

	Single lamp	Ballasts for two lamps	Ballasts for three lamps
Voltage between lamp terminals (Note 1)			
at 50°F (10°C) and above, (Vrms) min	300	470	675
at 0°F (-17.8°C) and above, (Vrms) min	355	470	675
at -20°F (-28.9°C) and above, (Vrms) min	400	500	690
Voltage lamp terminal to starting aid (Note 2)			
at 50°F (10°C) and above, (Vpeak) min	400	400	400
at 0°F (-17.8°C) and above, (Vpeak) min	575	575	575
at -20°F (-28.9°C) and above, (Vpeak) min	650	650	650
Waveshape of starting voltage			
crest factor, maximum	2.0	2.0	2.0
Starting capacitor size			
minimum (μF) (at 60 Hz)		0.06	0.06
maximum (μF) (at 60 Hz)		0.12	0.12

NOTES

1 These values are for lead circuits only. For lag circuits, add 10%.

2 These values are for crest factors of 1.55 to 2.0. Add 10% for crest factors less than 1.55.

Cathode heat requirements

Rapid start

Voltage	3.6 V nominal
Limits during operation	3.3 V min, 4.3 V max
Dummy load resistor	3.2 ohms ± 0.05 ohm
Voltage across dummy load	3.4 V min, 4.5 V max

Additional starting requirements for ballasts for two lamps in series

At 90% of rated line voltage and with the cathode circuits for the ballasts loaded with the specified dummy load resistances, ballast shall supply a minimum of 0.725-A to a 500-ohm noninductive resistor connected across the ballast lamp leads that supply the highest voltage. The measurement shall be made at an ambient temperature of 25°C (77°F).

Copyright National Electrical Manufacturers Association
Provided by IHS under license with NEMA
No reproduction or networking permitted without license from IHS
Not for Resale