ADOPTION NOTICE

ANSI C57.12.70, "Terminal Markings and Connections for Distribution and Power Transformers," was adopted on 26 August 1994 for use by the Department of Defense (DoD). Proposed changes by DoD activities must be submitted to the DoD Adopting Activity: Naval Construction Battalion Center, 1000 23rd Avenue, Code 156, Port Hueneme, CA 93043-4301. DoD activities may obtain copies of this standard from the Defense Printing Service Detachment Office, Bldg. 4D (Customer Service), 700 Robbins Avenue, Philadelphia, PA 19111-5094. The private sector and other Government agencies may purchase copies from the American National Standards Institute, 11 West 42nd Street, New York, NY 10036.

Custodians:
Army - ME
Navy - YD1
Air Force - 99

Review Activity:
DLA - GS

Adopting Activity:
Navy - YD1

(Project 6120-0033)

FSC 5950

DISTRIBUTION STATEMENT A. Approved for public release; distribution is unlimited.

Copyright National Electrical Manufacturers Association
Provided by IHS under license with NEMA
No reproduction or networking permitted without license from IHS
Not for Resale

ANSI C57.12.70 78 ■ 0724150 0005078 7 ■

A-39-63
A-39-05
A-39-67

American National Standard

terminal markings and connections for distribution and power transformers

ANSI C57.12.70-1978

american national standards institute, inc.
1430 broadway, new york, new york 10018

Copyright National Electrical Manufacturers Association
Provided by IHS under license with NEMA
No reproduction or networking permitted without license from IHS

Not for Resale

ANSI®
C57.12.70-1978
Revision of
ANSI C57.12.70-1964 (R1971)

American National Standard Terminal Markings and Connections for Distribution and Power Transformers

Secretariat

Edison Electric Institute
Institute of Electrical and Electronics Engineers
National Electrical Manufacturers Association

Approved May 2, 1978

American National Standards Institute, Inc

Copyright National Electrical Manufacturers Association
Provided by IHS under license with NEMA
No reproduction or networking permitted without license from IHS

Not for Resale

American National Standard

An American National Standard implies a consensus of those substantially concerned with its scope and provisions. An American National Standard is intended as a guide to aid the manufacturer, the consumer, and the general public. The existence of an American National Standard does not in any respect preclude anyone, whether he has approved the standard or not, from manufacturing, marketing, purchasing, or using products, processes, or procedures not conforming to the standard. American National Standards are subject to periodic review and users are cautioned to obtain the latest editions.

CAUTION NOTICE: This American National Standard may be revised or withdrawn at any time. The procedures of the American National Standards Institute require that action be taken to reaffirm, revise, or withdraw this standard no later than five years from the date of publication. Purchasers of American National Standards may receive current information on all standards by calling or writing the American National Standards Institute.

Published by

American National Standards Institute
1430 Broadway, New York, New York 10018

Copyright © 1978 by American National Standards Institute, Inc
All rights reserved.

No part of this publication may be reproduced in any form, in an electronic retrieval system or otherwise, without the prior written permission of the publisher.

Printed in the United States of America

P1½M1278/5

Copyright National Electrical Manufacturers Association
Provided by IHS under license with NEMA
No reproduction or networking permitted without license from IHS

Not for Resale

Foreword

(This Foreword is not a part of American National Standard Terminal Markings and Connections for Distribution and Power Transformers, ANSI C57.12.70-1978.)

This standard has evolved from a series of predecessor documents prepared by NEMA and ANSI.

Significant revisions of this edition involve changes to utilize modern terminology, addition of zigzag phasor diagrams, inclusion of figures showing additional grounding connections, addition of figures showing "standard" and "reverse" arrangements commonly used in unit substations, and inclusion of a new "preferred" connection arrangement for three-phase delta-connected windings with a mid-tap in one winding. This last change was included to clarify and reconcile potential interference problems between this standard and American National Standard National Electrical Code ANSI/NFPA 70-1978 (formerly known as ANSI C1).

This standard was revised by an Ad Hoc Task Force consisting of John C. Dutton, who was appointed by H. D. Lewis, then the Chairman of ANSI Committee C57. The applicable rules and procedures of ANSI for the preparation and approval of voluntary consensus standards were followed. These specify procedures for voting, review and attempted reconciliation of dissenting viewpoints, a 60-day public review period, and final review and approval by the American National Standards Institute Board of Standards Review.

This American National Standard is a voluntary consensus standard. Its use may become mandatory only when required by a duly constituted legal authority, or when specified in a contractual relationship. To meet specialized needs and to allow for innovation, specific changes are permissible when mutually determined by the user and the producer, provided such changes do not violate existing laws, and are considered technically adequate for the function intended.

Suggestions for improvement of this standard will be welcome. They should be sent to American National Standards Institute, Inc, 1430 Broadway, New York, N.Y. 10018.

This standard was processed and approved for submittal to ANSI by American National Standards Committee on Transformers, Regulators, and Reactors, C57. Committee approval of the standard does not necessarily imply that all committee members voted for its approval. At the time it approved this standard, the C57 Committee had the following members.

I. H. Koponen, Chairman
C. R. Willmore, Secretary

Organization Represented	*Name of Representative*
Bonneville Power Administration	G. W. Iliff
Electric Light and Power Group (The Association of Edison Illuminating Companies and the Edison Electric Institute)	R. R. Bast
	I. O. Berkhan
	I. H. Koponen
	P. H. Philippidis
	B. F. Smith
	E. A. Villasuso
	J. P. Markey (Alt)
Institute of Electrical and Electronics Engineers	S. Bennon
	W. P. Burt
	J. C. Dutton
	L. W. Long
	D. E. Massey
	D. C. Johnson (Alt)

Copyright National Electrical Manufacturers Association
Provided by IHS under license with NEMA
No reproduction or networking permitted without license from IHS

Not for Resale

Organization Represented	*Name of Representative*
National Electrical Manufacturers Association (NEMA)	L. C. Aicher
	W. R. Courtade
	J. D. Douglass
	W. C. Kendall
	W. J. McNutt
	R. L. Schwab
	R. E. Uptegraff, Jr
	G. W. Mayall (Alt)
	N. M. Neagle (Alt)
	G. C. Wilburn (Alt)
Tennessee Valley Authority	L. R. Smith
U.S. Department of Agriculture, Rural Electrification Administration	J. C. Arnold, Jr
U.S. Department of the Interior, Bureau of Reclamation	S. J. Baxter
U.S. Department of the Navy, Naval Facilities Engineering Command	L. W. Johnson
Underwriters Laboratories, Inc	E. J. Huber
	R. W. Seelbach (Alt)

Copyright National Electrical Manufacturers Association
Provided by IHS under license with NEMA
No reproduction or networking permitted without license from IHS

Not for Resale

Contents

SECTION PAGE

1. Scope 7

2. Reference Standards 7

3. Markings of Terminals and Identification of Windings 8
   - 3.1 General 8
   - 3.2 Sequence Designation 8
   - 3.3 External Terminal Designation 8
   - 3.4 Neutral Terminal Designation 8
   - 3.5 Grounded Terminal Designation 8

4. Polarity and Terminal Markings of Single-Phase Transformers 8
   - 4.1 Polarity and Terminal Marking 8
   - 4.2 Subtractive and Additive Polarity 9
   - 4.3 Order of Numbering Terminals of Any Winding 9
   - 4.4 Order of Numbering Terminals of Different Windings 9
   - 4.5 Location of H_1 Terminal 9
   - 4.6 Parallel Operation 9

5. Angular Displacement and Connections for Single-Phase Transformers in Three-Phase Banks 13

6. Phase Relationships and Terminal Markings for Three-Phase Transformers 13
   - 6.1 Relation between Highest Voltage Winding and Other Windings 13
   - 6.2 Phase Relationships and Terminal Markings 13
   - 6.3 Marking of Full Winding Terminals 13
   - 6.4 Tap Leads 13
   - 6.5 Location of External Terminals 13
   - 6.6 Interphase Connections Made Outside of Case 14
   - 6.7 Parallel Operation 14

7. Terminal Markings for Three-Phase to Six-Phase Transformers 15
   - 7.1 General 15
   - 7.2 Marking of Full Winding Terminals 15
   - 7.3 Relation between Three-Phase and Six-Phase Windings 15
   - 7.4 Tap Leads 15

8. Use of Transformers with Standard Voltage in Connecting Systems of Various Phase Displacements 16
   - 8.1 General 16
   - 8.2 0° Phase Displacement — Δ-Δ or Y-Y 16
   - 8.3 30° Phase Displacement — Δ-Y or Y-Δ 16
   - 8.4 30° Phase Displacement — Δ-Y or Y-Δ (continued) 16
   - 8.5 180° Phase Displacement 16
   - 8.6 Summary of Preceding Examples 16

Figures

- Fig. 1 Single-Phase Transformer Terminal Markings (Simple H and X Windings without Taps) 10
- Fig. 2 Single-Phase Transformer Terminal Markings (Simple H and X Windings with Taps) 10
- Fig. 3 Single-Phase Transformer Terminal Markings (Series Multiple X Winding without Taps) 10
- Fig. 4 Single-Phase Transformer Terminal Markings (Series Multiple X Winding with Taps) 10
- Fig. 5 Single-Phase Transformer Terminal Markings (Autotransformer) 10

Copyright National Electrical Manufacturers Association
Provided by IHS under license with NEMA
No reproduction or networking permitted without license from IHS

Not for Resale

Fig. 6 Single-Phase Transformer Terminal Markings (Three-Wire Series Connection) (Transformers Having Neutral Brought Out between Outside Terminals) 10
Fig. 7 Single-Phase Transformer Terminal Markings (Two-Wire Multiple Connection) 11
Fig. 8 Single-Phase Transformer Terminal Markings (Three-Wire Series Connection) (Transformers Having Neutral Brought Out between Outside Terminals) 11
Fig. 9 Single-Phase Transformer Terminal Markings (Three-Wire Series Connection) (Transformers Having Neutral Brought Out between Outside Terminals) 11
Fig. 10 Single-Phase Transformer Terminal Markings (Three-Wire Series Connection) (Transformers Having Neutral Brought Out between Outside Terminals) 11
Fig. 11 Single-Phase Transformer Terminal Markings (Two-Wire Multiple Connection) 12
Fig. 12 Single-Phase Transformer Terminal Markings (Two-Wire Series Connection) 12
Fig. 13 Single-Phase Transformer Terminal Markings (Two-Wire Multiple Connection) 12
Fig. 14 Connections for Single-Phase Transformers in Parallel 12
Fig. 15 Single-Phase Transformers Connected Δ-Δ and Y-Y in Three-Phase Banks with 0° Angular Displacement 14
Fig. 16 Single-Phase Transformers Connected Δ-Y and Y-Δ in Three-Phase Banks with 30° Angular Displacement 14
Fig. 17 Single-Phase Transformers When Transforming Three to Six Phase with 0° Angular Displacement 15
Fig. 18 Single-Phase Transformers When Transforming Three to Six Phase with 30° Angular Displacement 15
Fig. 19 Terminal Markings and Voltage Diagrams for Three-Phase Transformer Connections 17
Fig. 20 Angular Displacement and Terminal Markings for Three-Phase Transformers . . . 18
Fig. 21 Terminal Markings and Locations for Unit Substation Transformers with High- and Low-Voltage Sidewall Bushings 19
Fig. 22 Terminal Markings and Locations for Unit Substation Transformers with High-Voltage Cover Bushings 19
Fig. 23 Terminal Markings and Voltage Phasor Diagrams for Usual Six-Phase Transformer Connections 20

Copyright National Electrical Manufacturers Association
Provided by IHS under license with NEMA
No reproduction or networking permitted without license from IHS
Not for Resale

American National Standard Terminal Markings and Connections for Distribution and Power Transformers

1. Scope

This standard describes the terminal markings and connections for distribution and power transformers covered in American National Standards C57.12.00, C57.12.01, C57.12.10, C57.12.20, C57.12.21, C57.12.22, C57.12.23 C57.12.24, C57.12.25, C57.12.26, C57.12.30, and C57.12.40.

This standard does not describe terminal markings and connections of rectifier transformers; these are described in American National Standard Requirements, Terminology, and Test Code for Pool-Cathode Mercury-Arc Rectifier Transformers, ANSI C57.18-1964 (R1971).

2. Reference Standards[1]

When the following American National Standards referred to in this document are superseded by a revision approved by the American National Standards Institute, the revision shall apply:

American National Standard National Electrical Code, ANSI/NFPA 70-1978 (formerly known as ANSI C1)

American National Standard Dictionary of Electrical and Electronics Terms, ANSI/IEEE Std 100-1977

American National Standard General Requirements for Distribution, Power, and Regulating Transformers, ANSI C57.12.00-1973 (IEEE Std 462-1973)

American National Standard General Requirements for Dry-Type Distribution and Power Transformers, ANSI/IEEE C57.12.01-1979

American National Standard Requirements for Transformers 230 000 Volts and Below, 833/958 through 8333/10 417 kVA, Single-Phase; and 750/862 through 60 000/80 000/100 000 kVA, Three-Phase, ANSI C57.12.10-1977, including Supplement ANSI C57.12.10a-1978

American National Standard Requirements for Overhead-Type Distribution Transformers 67 000 Volts and Below; 500 kVA and Smaller, ANSI C57.12.20-1974, including Supplement ANSI C57.12.20a-1978

American National Standard Requirements for Pad-Mounted, Compartmental-Type, Single-Phase Distribution Transformers (High Voltage 16 340GrdY/9430 Volts and Below; Low Voltage 240/120; 167 kVA and Smaller), ANSI C57.12.21-1969*

American National Standard Requirements for Pad-Mounted, Compartmental-Type, Self-Cooled, Three-Phase Distribution Transformers, High Voltage 16 340 Volts and Below; 2500 kVA and Smaller, ANSI C57.12.22-1969*

American National Standard Requirements for Underground-Type Single-Phase Distribution Transformers, with Separable Insulated High-Voltage Connectors, 100 kVA and Smaller; High Voltage 24 940GrdY/14 400 Volts and Below; Low Voltage 240/120, ANSI C57.12.23-1978

American National Standard Requirements for Underground-Type Three-Phase Distribution Transformers, 2500 kVA and Smaller; High Voltage 24 940GrdY/14 400 Volts and Below; Low Voltage 480 Volts and Below, ANSI C57.12.24-1978

American National Standard Requirements for Pad-Mounted, Compartmental-Type, Distribution Transformers, with Separable Insulated High-Voltage Connectors, High Voltage 24 940GrdY/14 400 Volts and Below; Low Voltage 240/120 Volts and Below; 167 kVA and Smaller, ANSI C57.12.25-1975

American National Standard Requirements for Pad-Mounted, Compartmental-Type, Self-Cooled, Three-Phase Distribution Transformers for Use with Separable Insulated High-Voltage Connectors, High Voltage 24 940GrdY/14 400 Volts and Below; 2500 kVA and Smaller, ANSI C57.12.26-1975

American National Standard Requirements for Load-Tap-Changing Transformers, 230 000 Volts and Below, 3750/4687 through 60 000/100 000 kVA, Three-Phase, ANSI C57.12.30-1977

American National Standard Requirements for Second-

[1] Available from American National Standards Institute, 1430 Broadway, New York, N.Y. 10018.

*These standards are currently being revised.

Copyright National Electrical Manufacturers Association
Provided by IHS under license with NEMA
No reproduction or networking permitted without license from IHS
Not for Resale

ary Network Transformers, Subway and Vault Types (Liquid-Immersed), ANSI C57.12.40-1975

American National Standard Terminology for Power and Distribution Transformers, ANSI/IEEE C57.12.80-1978

American National Standard Test Code for Distribution, Power, and Regulating Transformers, ANSI C57.12.90-1973 (IEEE Std 262-1973), including Supplement ANSI/IEEE C57.12.90a-1978

American National Standard Test Code for Dry-Type Distribution and Power Transformers, ANSI/IEEE C57.12.91-1979

Documents are currently in preparation in the following subject areas:

Requirements for Ventilated Dry-Type Distribution Transformers 5 to 500 kVA, Single-Phase; and 15 to 500 kVA, Three-Phase; with High Voltage 2400 to 34 500 Volts

Requirements for Ventilated Dry-Type Power Transformers 750/1000 to 7500/10 000 kVA, Three-Phase, with High Voltage 2400 to 34 500 Volts

Requirements for Sealed Dry-Type Power Transformers, 750 to 5000 kVA, Three-Phase, with High Voltage 2400 to 34 500 Volts

3. Marking of Terminals and Identification of Windings

3.1 General. The windings of a transformer shall be distinguished from one another as specified in 3.1.1 and 3.1.2.

3.1.1 Two-winding transformers shall have their windings designated as high voltage (HV or H) and low voltage (LV or X).

3.1.2 Transformers with more than two windings shall have their windings designated as H, X, Y, and Z.

3.2 Sequence Designation

3.2.1 The highest voltage winding shall be designated as HV or H, except for transformers designed for three-phase to six-phase transformation (see Section 7).

3.2.2 The other windings, in order of decreasing voltage, are designated as X, Y, and Z.

3.2.3 If two (or more) windings have the same voltage and different kVA (kilovolt-ampere) ratings, the higher kVA winding receives the prior letter designation of the two (or more) letters available, according to the sequence by voltage as explained above.

3.2.4 If two or more windings have the same kVA and voltage rating, the designations of these windings are arbitrarily assigned.

3.3 External Terminal Designation. In general, external terminals shall be distinguished from one another by marking each terminal with a capital letter, followed by a subscript number. The terminals of the H winding are marked H_1, H_2, H_3. The terminals of the X winding are marked X_1, X_2, X_3, etc.

The identification of external terminals shall be accomplished either by the use of the sketches on the nameplate showing locations of specific terminals, or by physically marking terminals. Internal winding terminations shall be marked with numbers in any manner that will permit convenient reference and that cannot be confused with the markings of the external transformer terminals.

3.4 Neutral Terminal Designation. A neutral terminal of a three-phase transformer shall be marked with the proper letter followed by the subscript 0, for example, H_0, X_0, etc. A neutral terminal common to two or more windings of a single- or three-phase transformer shall be marked with the combination of the proper winding letters, each followed by the subscript 0; for example, H_0X_0, as in the case of autotransformers. A terminal brought out from the winding for some other use than that of a neutral terminal (for example, a 50% starting tap) shall be marked as a tap terminal.

3.5 Grounded Terminal Designation. If a transformer has a two-terminal winding with one terminal grounded and the other ungrounded, the subscript 2 terminal shall be the grounded terminal.

4. Polarity and Terminal Markings of Single-Phase Transformers

4.1 Polarity and Terminal Markings. Polarity and terminal markings of single-phase transformers shall be as described in 4.1 through 4.4.

4.1.1 Distribution Transformers, Liquid-Insulated

4.1.1.1 Polarity shall be subtractive for all liquid-insulated distribution transformers except as otherwise described in applicable sections of ANSI C57.12.00-1973 and ANSI C57.12.20-1974, including Supplement ANSI C57.12.20a-1978 (which specify additive polarity for single-phase transformers in sizes 200 kVA and smaller having high-voltage windings 8660 volts and below).

4.1.1.2 Terminal markings shall be as shown in this standard except as otherwise specified in ANSI C57.12.21-1969, ANSI C57.12.23-1978, and ANSI C57.12.25-1975.

NOTE: 4.1.1.1 and 4.1.1.2 above are in agreement with ANSI C57.12.00-1973 and ANSI C57.12.20-1974, including Supplement ANSI C57.12.20a-1978, which refer to this standard.

Copyright National Electrical Manufacturers Association
Provided by IHS under license with NEMA
No reproduction or networking permitted without license from IHS
Not for Resale

4.1.2 Power Transformers, Liquid-Insulated

4.1.2.1 Polarity shall be subtractive.

4.1.2.2 Terminal markings not described in ANSI C57.12.00-1973 or in ANSI C57.12.10-1976, including Supplement ANSI C57.12.10a-1978, shall be in accordance with Section 4 of this standard.

NOTE: 4.1.2.1 and 4.1.2.2 above are in agreement with ANSI C57.12.00-1973 and ANSI C57.12.10-1976, including Supplement ANSI C57.12.10a-1978, which refer to this standard.

4.1.3 Dry-Type Transformers

4.1.3.1 Polarity shall be subtractive.

4.1.3.2 Terminal markings not described in ANSI/IEEE C57.12.01-1979 shall be in accordance with Section 4 of this standard.

NOTE: 4.1.3.1 and 4.1.3.2 above are in agreement with ANSI/IEEE C57.12.01-1979, which refers to this standard.

4.1.4 Autotransformers. Single-phase autotransformer terminals shall, as far as practicable, be marked in accordance with the requirements for subtractive polarity. (See Fig. 5.)

4.2 Subtractive and Additive Polarity. When terminals of any winding are brought outside the tank and marked as described below, the polarity of a transformer is:

(1) Subtractive when H_1 and X_1 are adjacent. [See Figs. 1(a), 2(a), 3(a), 4(a), 5, 6(a), 7(a), 8(a), 9(a), 10(a), 11(a), 12(a), and 13(a).]

(2) Additive when H_1 is diagonally located with respect to X_1. [See Figs. 1(b), 2(b), 3(b), 4(b), 6(b), 7(b), 8(b), 9(b), 10(b), 11(b), 12(b), and 13(b).]

(3) The same rule applies between the H and Y winding and between the H and Z winding; for example, when Y_1 or Z_1 is on the left when facing the Y or Z side of the case, respectively, the polarity is subtractive; conversely, when Y_1 or Z_1 is on the right when facing the Y or Z side of the case, respectively, the polarity is additive.

4.3 Order of Numbering Terminals of Any Winding

4.3.1 The terminals of any winding whose leads are brought out of the cases shall be numbered 1, 2, 3, 4, 5, etc, the lowest and highest numbers marking the full winding and the intermediate numbers marking fractions of windings or taps. All numbers shall be so applied that the voltage difference from any terminal having a lower number toward any terminal having a higher number shall have the same sign at any instant. (See Figs. 1 and 2.)

4.3.2 If a winding is divided into two or more parts for series-multiple connections and the leads of these parts are brought out of the case, the above rule shall apply for the series connection with the addition that the terminations of each portion of the winding shall be given consecutive numbers. (See Figs. 1 and 2 for four or more leads brought out and Figs. 6 through 11 for two or more leads brought out.)

4.3.3 When two leads are brought out of the case through one bushing (to minimize inductive effect), such terminals shall be physically identified by stamping or tagging in compliance with 4.3.1.

4.4 Order of Numbering Terminals of Different Windings

4.4.1 The numbering of the terminals of the H winding and the terminals of the X winding shall be applied so that when H_1 and X_1 are connected together and voltage is applied to the transformer, the voltage between the highest numbered H terminal and the highest numbered X terminal is less than the voltage of the H winding.

4.4.2 When more than two windings are used, the same relationship shall apply between each pair of windings.

4.5 Location of H_1 Terminal

4.5.1 The H_1 lead shall be brought out as the right-hand terminal of the high-voltage group as seen when facing the highest voltage side of the case; other H terminals shall be in numerical order from right to left, except as modified by specific product standards (for example, ANSI C57.12.21-1969, ANSI C57.12.23-1978, and ANSI C57.12.25-1975).

4.5.2 When only one lead of the high-voltage winding is brought out (the other lead being connected to the tank internally), it shall be designated as H_1. For polarity marking and testing, this H_1 terminal shall be regarded as located on the right, when facing the high-voltage side of the case, regardless of its actual location.

4.5.3 When the high-voltage leads are brought out through two bushings of different insulation levels, the bushing having the higher voltage level shall be designated as H_1 and shall be located on the right-hand side when facing the high-voltage side of the case, except as modified by specific product standards (for example, ANSI C57.12.21-1969, ANSI C57.12.23-1978, and ANSI C57.12.25-1975).

4.6 Parallel Operation. Transformers having terminals marked in accordance with this standard may be operated in parallel by connecting similarly marked terminals together, provided their ratios, voltages, resistances, reactances, and ground connections are such as to permit parallel operation. (See Fig. 14 for connections for transformers in parallel.)

NOTE: In some cases, designs may be such as to permit parallel operation, although, due to a difference in the number of tap terminals, the terminals to be connected together may not be similarly marked.

(text continued on page 13)

Copyright National Electrical Manufacturers Association
Provided by IHS under license with NEMA
No reproduction or networking permitted without license from IHS

Not for Resale

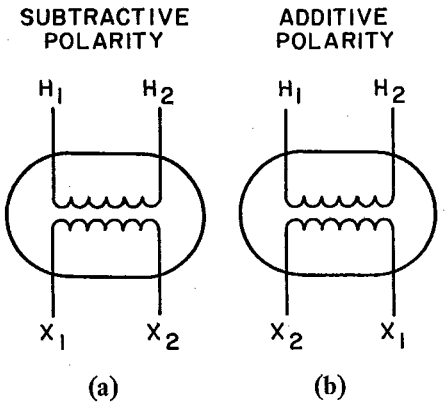

Fig. 1
Single-Phase Transformer Terminal Markings
(Simple H and X Windings without Taps)

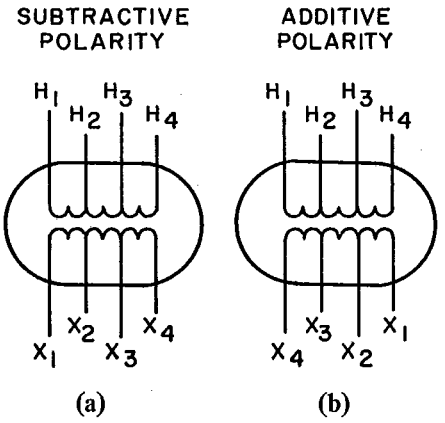

Fig. 2
Single-Phase Transformer Terminal Markings
(Simple H and X Windings with Taps)

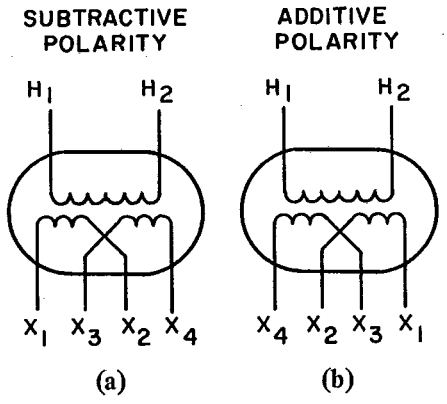

Fig. 3
Single-Phase Transformer Terminal Markings
(Series Multiple X Winding without Taps)

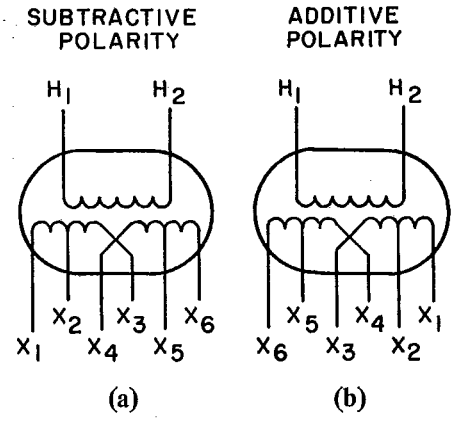

Fig. 4
Single-Phase Transformer Terminal Markings
(Series Multiple X Winding with Taps)

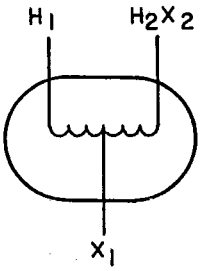

Fig. 5
Single-Phase Transformer Terminal Markings
(Autotransformer)

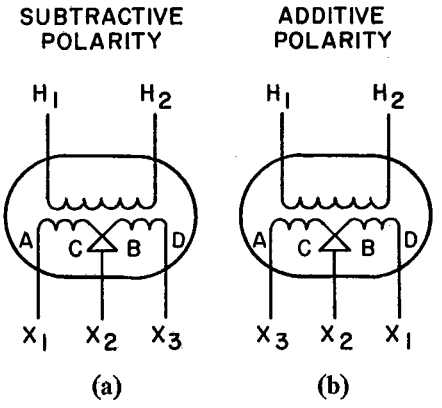

Fig. 6
Single-Phase Transformer Terminal Markings
(Three-Wire Series Connection)
(Transformers Having Neutral Brought Out
between Outside Terminals)

Copyright National Electrical Manufacturers Association
Provided by IHS under license with NEMA
No reproduction or networking permitted without license from IHS
Not for Resale

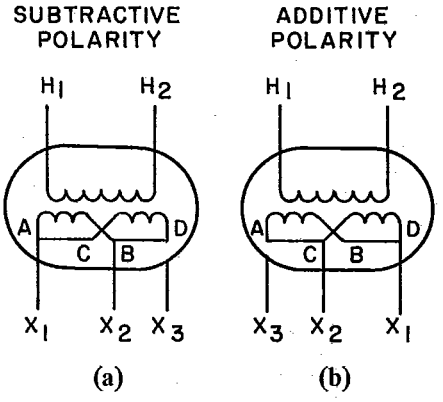

Fig. 7
Single-Phase Transformer Terminal Markings
(Two-Wire Multiple Connection)

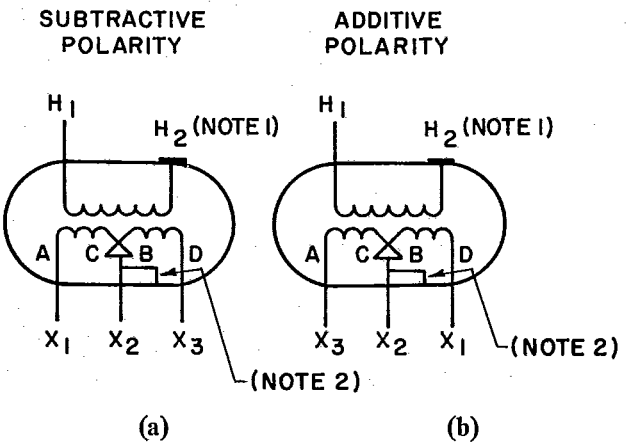

NOTES:
(1) Tank grounding connector.
(2) Bolted to case internally.

Fig. 9
Single-Phase Transformer Terminal Markings
(Three-Wire Series Connection)
(Transformers Having Neutral Brought Out
between Outside Terminals)

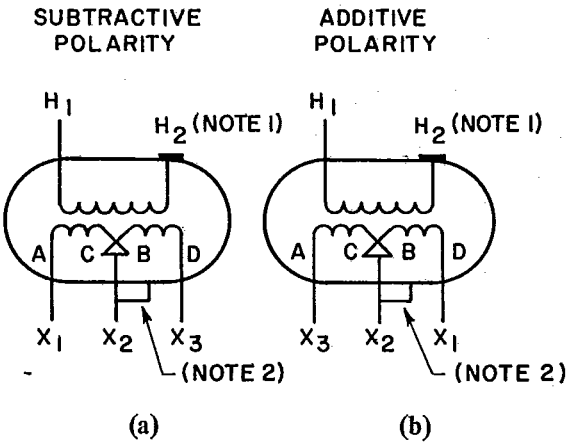

NOTES:
(1) Tank grounding connector.
(2) Bolted to case externally. (Connection to be furnished by user.)

Fig. 8
Single-Phase Transformer Terminal Markings
(Three-Wire Series Connection)
(Transformers Having Neutral Brought Out
between Outside Terminals)

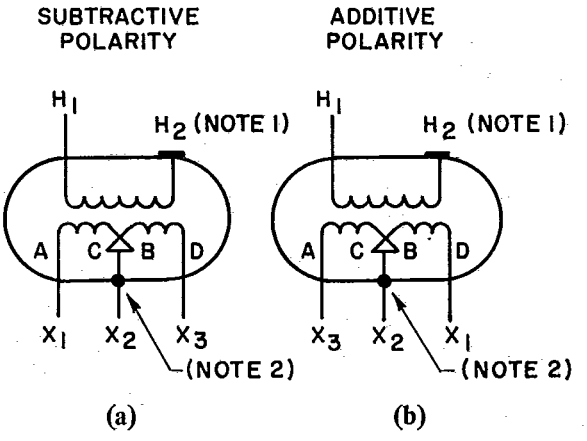

NOTES:
(1) Tank grounding connector.
(2) Bolted to case internally.
(3) Fig. 10(a) and 10(b) are related to single-phase submersible transformers with secondary cable lead bushings which require internal neutral grounding to tank but externally appear to be an insulated neutral cable.

Fig. 10
Single-Phase Transformer Terminal Markings
(Three-Wire Series Connection)
(Transformers Having Neutral Brought Out
between Outside Terminals)

Copyright National Electrical Manufacturers Association
Provided by IHS under license with NEMA
No reproduction or networking permitted without license from IHS
Not for Resale

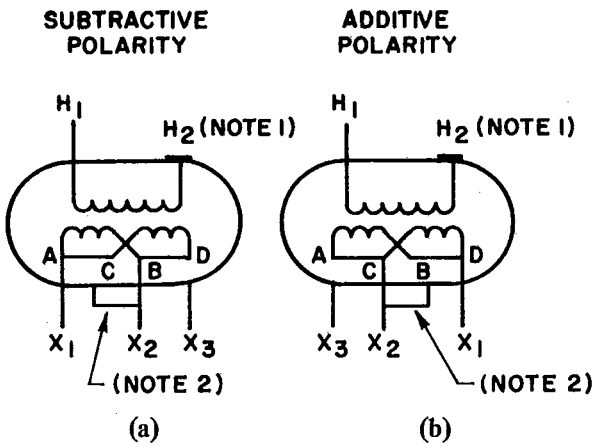

NOTES:
(1) Tank grounding connector.
(2) Bolted to case externally. (Connection to be furnished by user.)

Fig. 11
Single-Phase Transformer Terminal Markings
(Two-Wire Multiple Connection)

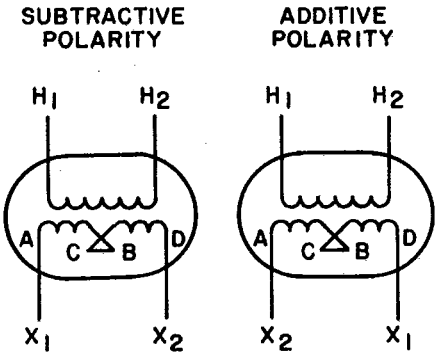

Fig. 12
Single-Phase Transformer Terminal Markings
(Two-Wire Series Connection)

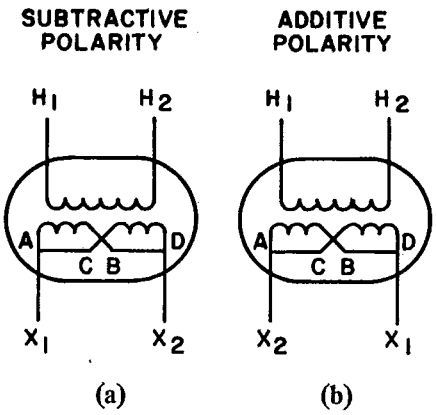

Fig. 13
Single-Phase Transformer Terminal Markings
(Two-Wire Multiple Connection)

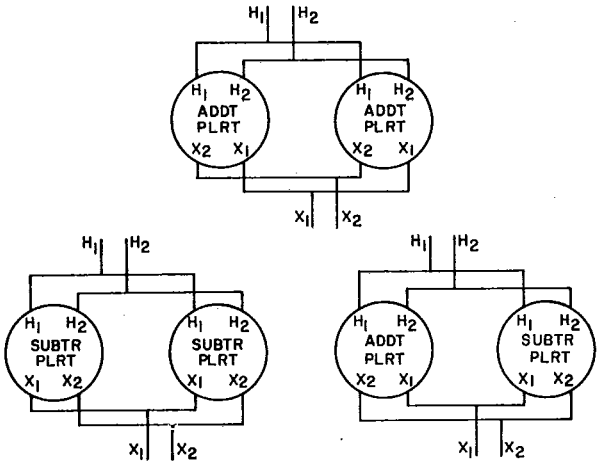

NOTE: This figure is included as information to illustrate the connection in parallel of single-phase transformers of additive polarity, additive and subtractive polarity, and subtractive polarity in banks.

Fig. 14
Connections for Single-Phase Transformers in Parallel

Copyright National Electrical Manufacturers Association
Provided by IHS under license with NEMA
No reproduction or networking permitted without license from IHS
Not for Resale

5. Angular Displacement and Connections for Single-Phase Transformers in Three-Phase Banks

See Figs. 15 through 18.

6. Phase Relationships and Terminal Markings for Three-Phase Transformers

6.1 Relation between Highest Voltage Winding and Other Windings

6.1.1 Phase Sequence Markings. The markings shall be so applied that if the phase sequence of voltage on the highest voltage winding is in the time order H_1, H_2, H_3, it will be in the time order of X_1, X_2, X_3, and Y_1, Y_2, Y_3, etc, on the other windings.

6.1.2 Phase Relationship Markings. In order that the markings of terminals shall indicate definite phase relations, they shall be made in accordance with one of the three-phase groups shown in Fig. 19. The angular displacement between the H winding and the X winding is the angle in each of the voltage phasor diagrams (see Fig. 19), between the lines passing from its neutral point through H_1 and X_1, respectively.

6.2 Phase Relationships and Terminal Markings

6.2.1 Phase relationships and terminal markings for liquid-insulated distribution transformers shall be as specified in general and product standards ANSI C57.12.00-1973, ANSI C57.12.20-1974, including Supplement ANSI C57.12.20a-1978, ANSI C57.12.22-1969, ANSI C57.12.24-1978, ANSI C57.12.26-1975, and ANSI C57.12.40-1975.

6.2.2 Phase relationships and terminal markings for liquid-insulated power transformers shall be as specified in general and product standards ANSI C57.12.00-1973, ANSI C57.12.10-1976, including Supplement C57.12.10a-1978, and ANSI C57.12.30-1977.

6.2.3 Phase relationships and terminal markings for dry-type distribution and power transformers shall be as specified in ANSI/IEEE C57.12.01-1979.

NOTE: The standards listed in 6.2.2 and 6.2.3 are in agreement with, and refer to, this standard.

6.3 Marking of Full Winding Terminals

6.3.1 General. The three leads for each winding that connect to the full phase windings of a three-phase transformer shall have their terminals marked H_1, H_2, H_3, X_1, X_2, X_3, Y_1, Y_2, Y_3, etc, respectively.

6.3.2 Autotransformers. Three-phase autotransformer terminals shall be marked in accordance with the requirements for corresponding multiwinding transformers. (See Fig. 20, Group 3.)

6.4 Tap Leads

6.4.1 In general, where tap leads are brought out of the case (neutral lead excepted) their terminals shall be marked with the proper letter followed by the figures 4, 7, etc, for one phase; 5, 8, etc, for another phase; and 6, 9, etc, for the third phase. (See Fig. 19, Group 3.)

6.4.2 For delta connections, the order of numbering tap terminals shall be as follows: 4, 7, etc, from terminal 1 toward terminal 2; 5, 8, etc, from terminal 2 toward terminal 3; and 6, 9, etc, from terminal 3 toward terminal 1. (See Fig. 19, Group 3.)

6.4.3 For wye connections, the order of numbering tap terminals shall be as follows: 4, 7, etc, from terminal 1 toward neutral; 5, 8, etc, from terminal 2 toward neutral; and 6, 9, etc, from terminal 3 toward neutral. (See Fig. 19, Group 3.)

6.4.4 For a delta-connected winding with a center-tap in one leg, two connections are in common use as described below:

(1) Unless otherwise specified, a center-tap X_6 shall be provided in leg X_1X_3, as shown in Fig. 20(b) or (g).

NOTE: This connection has been added to ANSI C57.12.70-1978 to provide improved coordination with ANSI/NFPA 70-1978 (formerly known as ANSI C1) paragraph 384-3(f), which requires that the B phase (commonly connected to X_2) shall have the higher voltage to ground.

(2) When specified, a center tap X_4 shall be provided in leg X_1X_2, as shown in Fig. 20(c) or (h).

NOTE: This was the only connection shown in ANSI C57.12.70 in the period 1964 to 1977. This winding will also conform to ANSI/NFPA 70-1978 (formerly known as ANSI C1) paragraph 384-3(f) if the B phase is connected to X_3.

6.5 Location of External Terminals

6.5.1 High Voltage, Low Voltage and Neutral Terminals. The H_1 lead shall be brought to a terminal on the right-hand side of the case when facing the highest voltage side. The H_2 and H_3 terminals shall be arranged in numerical order reading from right to left when facing the highest voltage side. The H_0 terminal, if present, shall be located on the right of the H_1 terminal when facing the highest voltage side of the case. (See Fig. 20, Group 1.)

The X_1 lead shall be brought to a terminal on the left-hand side of the case when facing the low-voltage side. The X_2 and X_3 terminals shall be arranged in numerical order, reading from left to right, when facing the X winding side of the case. The X_0 terminal, if present, shall be located to the left of the X_1 terminal when facing the X winding side of the case. (See Fig. 20, Group 2.)

NOTE: Exceptions to the normal locations described above may occur in secondary network, subway, and vault-type transformers as described in 6.5.1.1 and in transformers for unit substations as described in 6.5.1.2.

Copyright National Electrical Manufacturers Association
Provided by IHS under license with NEMA
No reproduction or networking permitted without license from IHS

Not for Resale

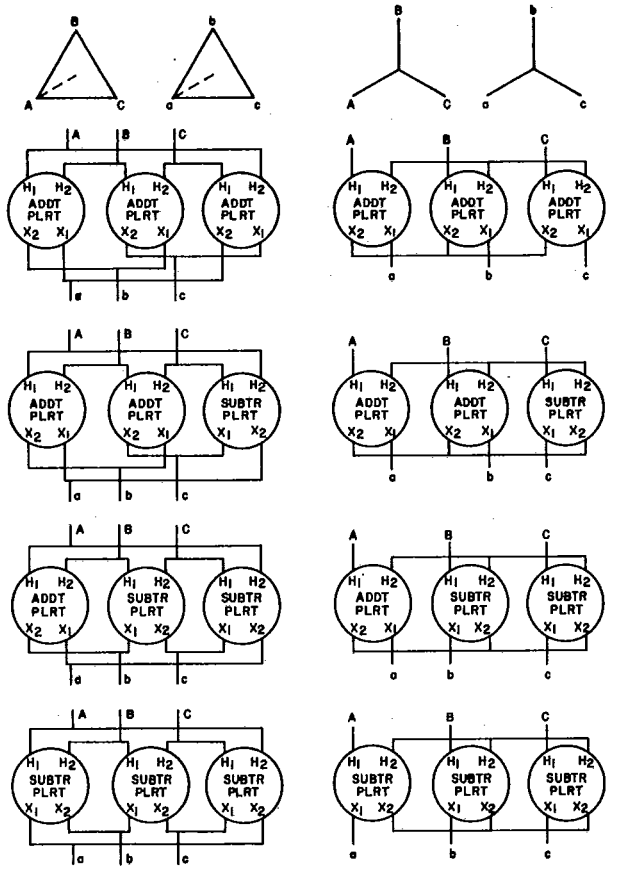

NOTE: This figure is included to illustrate connections of single-phase transformers of additive polarity, additive and subtractive polarity, and subtractive polarity in banks.

Fig. 15
Single-Phase Transformers Connected Δ-Δ and Y-Y in Three Phase Banks with 0° Angular Displacement

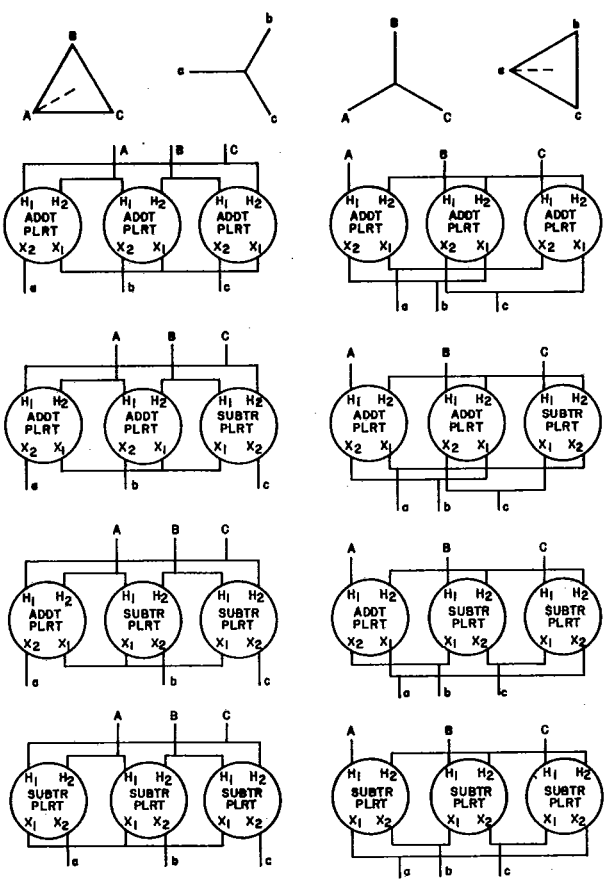

NOTE: This figure is included to illustrate connections of single-phase transformers of additive polarity, additive and subtractive polarity, and subtractive polarity in banks.

Fig. 16
Single-Phase Transformers Connected Δ-Y and Y-Δ in Three-Phase Banks with 30° Angular Displacement

6.5.1.1 Secondary Network, Subway, and Vault-Type Transformers. Locations of line and neutral terminals of secondary network, subway, and vault-type transformers differs from the locations above and are shown in ANSI C57.12.40-1975.

6.5.1.2 Unit Substation Transformers. The winding terminals of "standard" and "reverse" unit substation transformers shall be located in accordance with Fig. 21 or 22.

When specified, winding terminals of "standard" and "reverse," or "right" and "left"-hand units, may have other terminal markings or arrangements.

6.5.2 Y Winding and Z Winding Terminals. The Y winding and Z winding terminals, if present, shall be numbered in the same manner as the low-voltage terminals.

6.6 Interphase Connections Made Outside of Case

6.6.1 Where the interphase connections are made outside the case, the terminals shall be marked with the proper letter followed by the numbers 1, 4, 7, 10, etc, for one phase; 2, 5, 8, 11, etc, for the second phase; and 3, 6, 9, 12, etc, for the third phase.

6.6.2 The markings shall be so applied that when a wye connection is made by joining together the highest numbered terminals of each phase, the requirements in this standard will apply except for 3.4.

6.7 Parallel Operation. Transformers having terminals marked in accordance with this standard may be operated in parallel by connecting similarly marked terminals together, provided that their angular displacements are the same and also provided that their ratios, voltages,

Copyright National Electrical Manufacturers Association
Provided by IHS under license with NEMA
No reproduction or networking permitted without license from IHS
Not for Resale

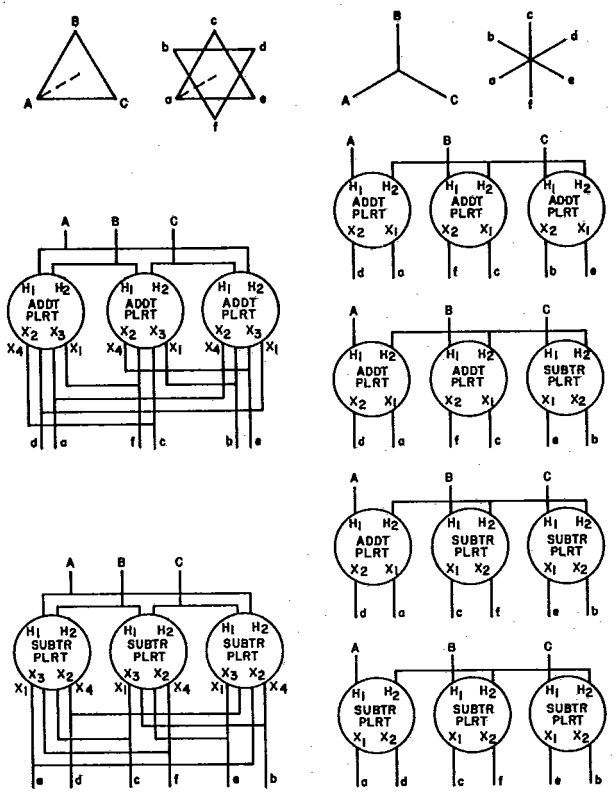

NOTE: This figure is included to illustrate connections of single-phase transformers of additive polarity, additive and subtractive polarity, and subtractive polarity in banks.

Fig. 17
Single-Phase Transformers When Transforming Three to Six Phase with 0° Angular Displacement

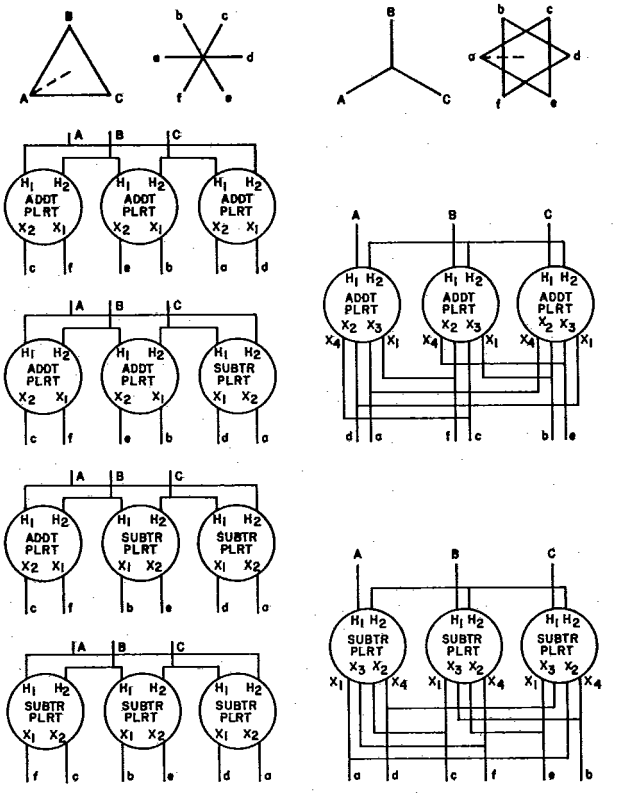

NOTE: This figure is included to illustrate connections of single-phase transformers of additive polarity, additive and subtractive polarity, and subtractive polarity in banks.

Fig. 18
Single-Phase Transformers When Transforming Three to Six Phase with 30° Angular Displacement

resistances, reactances, and ground connections are such as to permit parallel operation.

NOTE: In some cases designs may be such as to permit parallel operation, although, owing to a difference in the number of tap terminals, the terminals to be connected together may not be similarly marked.

7. Terminal Markings for Three-Phase to Six-Phase Transformers

7.1 General. The requirements for three-phase to six-phase transformers are set up on the basis that the three-phase winding is always the H winding.

7.2 Marking of Full Winding Terminals. The three terminals that connect to the three-phase winding shall be marked H_1, H_2, H_3, and the six terminals that connect to the full six-phase winding shall be marked X_1, X_2, X_3, X_4, X_5, X_6. (See Fig. 23, Groups 1 and 2.)

7.3 Relation between Three-Phase and Six-Phase Windings

7.3.1 The markings shall be so applied that if the phase sequence of voltage on the three-phase terminals is in the order H_1, H_2, H_3, it is in the time order X_1, X_2, X_3, X_4, X_5, X_6 on the six-phase terminals.

7.3.2 In order that the markings of terminal connections between phases will indicate definite phase relations, they shall be made in accordance with one of the four six-phase groups shown in Fig. 23, Groups 1 and 2. The angular displacement between the three-phase and six-phase windings is the angle in each of the voltage phasor diagrams from its neutral through H_1 and X_1, respectively.

7.4 Tap Leads. Where tap leads from the six-phase windings are brought out of the case (neutral lead excepted), they shall have terminal markings as designated in 7.4.1 and 7.4.2.

Copyright National Electrical Manufacturers Association
Provided by IHS under license with NEMA
No reproduction or networking permitted without license from IHS

Not for Resale

7.4.1 Diametrical Connections. Tap terminals shall be marked from the two ends of each phase winding toward the middle or neutral point in the following order:

X_7, X_{13}, etc, from X_1 toward neutral
X_8, X_{14}, etc, from X_2 toward neutral
X_9, X_{15}, etc, from X_3 toward neutral
X_{10}, X_{16}, etc, from X_4 toward neutral
X_{11}, X_{17}, etc, from X_5 toward neutral
X_{12}, X_{18}, etc, from X_6 toward neutral

[See Fig. 23(e).]

A tap from the middle point of any phase winding not intended as a neutral shall be given a number determined by counting from X_1, X_2, or X_3 and not from X_4, X_5, or X_6; for example, if the only taps brought out are 50% starting taps, they shall be numbered X_7, X_9, and X_{11}.

7.4.2 Double-Delta Connection. Tap terminals shall be marked in the following order:

X_7, X_{13}, etc, from X_1 toward X_3
X_8, X_{14}, etc, from X_2 toward X_4
X_9, X_{15}, etc, from X_3 toward X_5
X_{10}, X_{16}, etc, from X_4 toward X_6
X_{11}, X_{17}, etc, from X_5 toward X_1
X_{12}, X_{18}, etc, from X_6 toward X_2

[See Fig. 23(f).]

NOTE: For starting purposes, it is generally customary to bring out only two taps from one delta and start three phase.

8. Use of Transformers with Standard Voltage Diagrams in Connecting Systems of Various Phase Displacements

8.1 General. On the basis of two systems, one with phase terminals arbitrarily designated by A, B, C, and the other by a, b, c, the phase displacement of "a" with respect to "A" may be from 0° to 330° in steps of 30° Examples are given in 8.2 through 8.5 of transformer connections that may be made for any of these displacements.

8.2 0° Phase Displacement – Δ-Δ or Y-Y. The following examples are for Δ-Δ connections with system displacements of 0°, 120°, 240°.

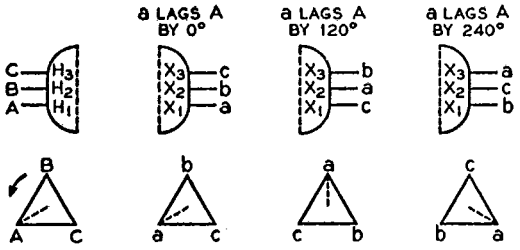

8.3 30° Phase Displacement – Δ-Y or Y-Δ. The following examples are for Δ-Y connections with system displacements of 30°, 150°, 270°.

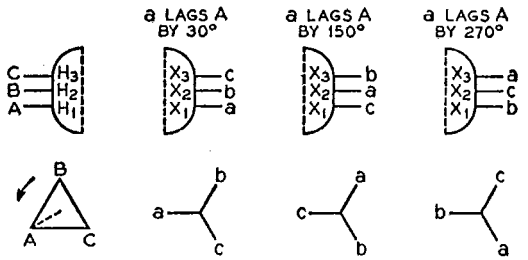

8.4 30° Phase Displacement – Δ-Y or Y-Δ (*continued*). To connect systems with 90°, 210°, or 330° displacements, the procedure given in 8.3 is followed, except that the sequence of connecting system terminals to the transformer is reversed by reversing any pair of terminals on both systems, such as B, C and b, c.

For example, using again the Δ-Y diagram, when the diagram is shown in the usual form, the change in the sequence of connections results in a reversal of phase rotation. Expressed in the recognized counterclockwise rotation, the equivalent diagrams are:

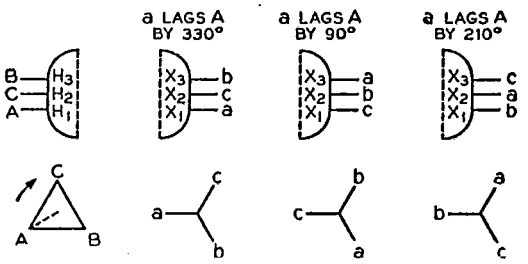

8.5 180° Phase Displacement. To connect systems of 60°, 180°, or 300° phase displacements, two consecutive, similar "30° phase-displacement" transformations can be made. This can be done in one transformation by the "180° phase-displacement" Δ-Δ or Y-Y voltage diagrams which are no longer considered standard. In either case, the methods given in 8.2 and 8.3 can be followed to obtain all three angles.

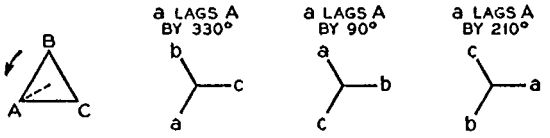

8.6 Summary of Preceding Examples

System Displacement, Degrees			See Section
0	120	240	8.2
30	150	270	8.3
60	180	300	8.4
90	210	330	8.5

Copyright National Electrical Manufacturers Association
Provided by IHS under license with NEMA
No reproduction or networking permitted without license from IHS
Not for Resale

Group 1
Angular Displacement 0°

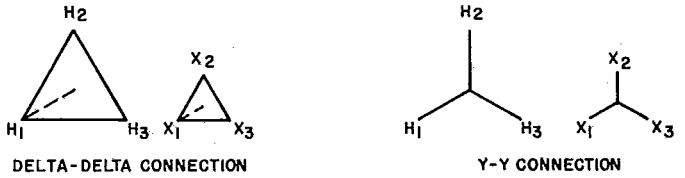

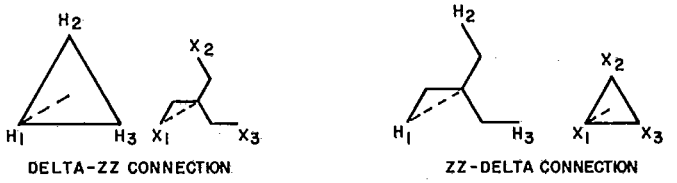

Group 2
Angular Displacement 30°

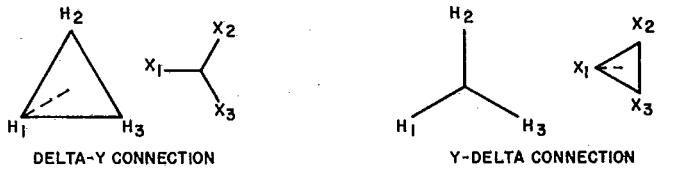

Three-Phase Transformers without Taps

Group 3
Angular Displacement 30°



Three-Phase Transformers with Taps

NOTES:
(1) This figure is included to illustrate the method of marking transformer terminals that are brought out of the case. Dash lines show angular displacement between high- and low-voltage windings.
(2) Angular displacement is the angle between a line drawn from neutral to H_1 and a line drawn from neutral to X_1 measured in a clockwise direction from H_1 to X_1.
(3) The zig-zag connections shown in Group 1 may also be achieved using the following internal connections:

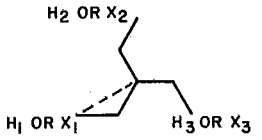

Fig. 19
Terminal Markings and Voltage Diagrams for Three-Phase Transformer Connections

Copyright National Electrical Manufacturers Association
Provided by IHS under license with NEMA
No reproduction or networking permitted without license from IHS

Not for Resale

Group 1
Angular Displacement 0°

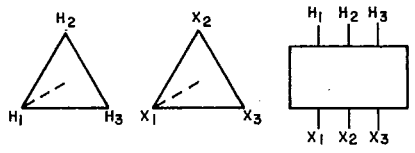

(a)

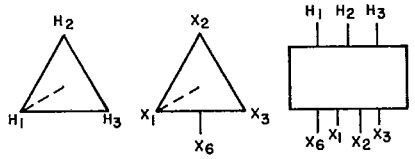

(b)

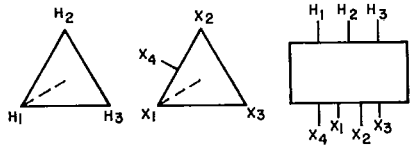

(c)

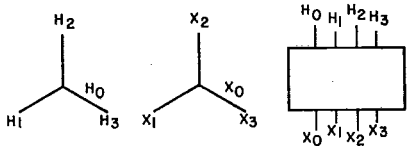

(d)

Group 2
Angular Displacement 30°

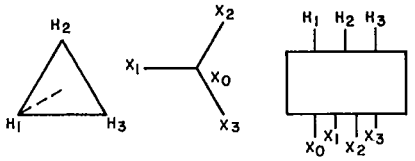

(e)

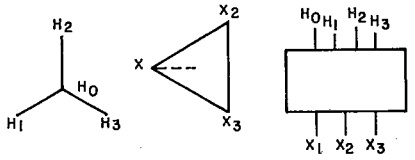

(f)

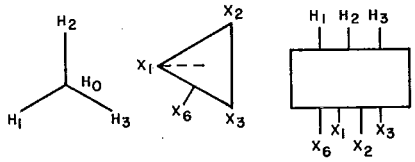

(g)

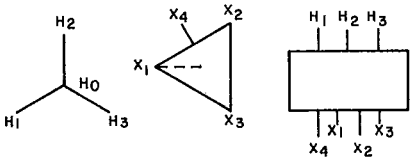

(h)

Group 3
Autotransformers

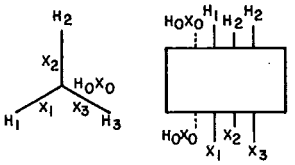

(i)

(IF NEUTRAL TERMINAL IS BROUGHT OUT)

NOTES:

(1) Dash lines show angular displacement between high- and low-voltage windings.

(2) Angular displacement is the angle between a line drawn from neutral to H_1 and a line drawn from neutral to X_1 measured in a clockwise direction from H_1 to X_1.

(3) (b), (c), (g), and (h) show mid tap brought out of one phase on the low-voltage side.

Fig. 20
Angular Displacement and Terminal Markings for Three-Phase Transformers

Copyright National Electrical Manufacturers Association
Provided by IHS under license with NEMA
No reproduction or networking permitted without license from IHS
Not for Resale

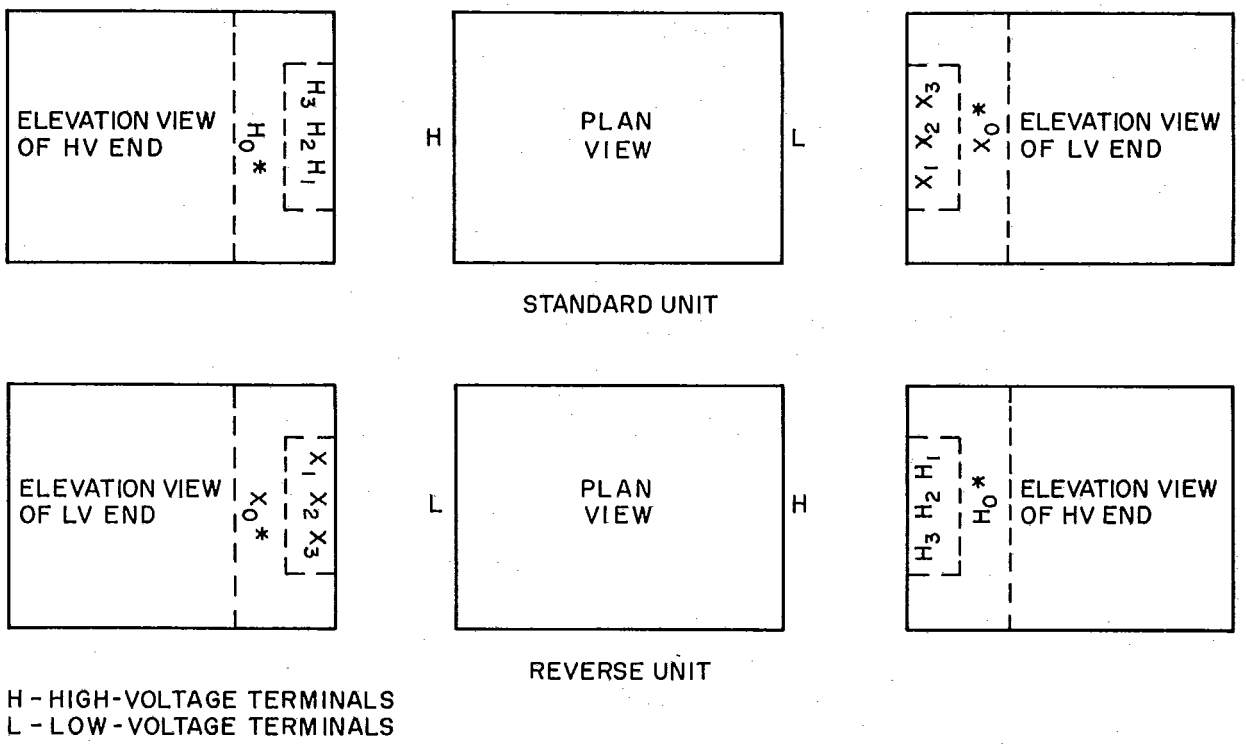

*Neutral shall be located within dotted zone.

Fig. 21
Terminal Markings and Locations for Unit Substation Transformers with High- and Low-Voltage Sidewall Bushings

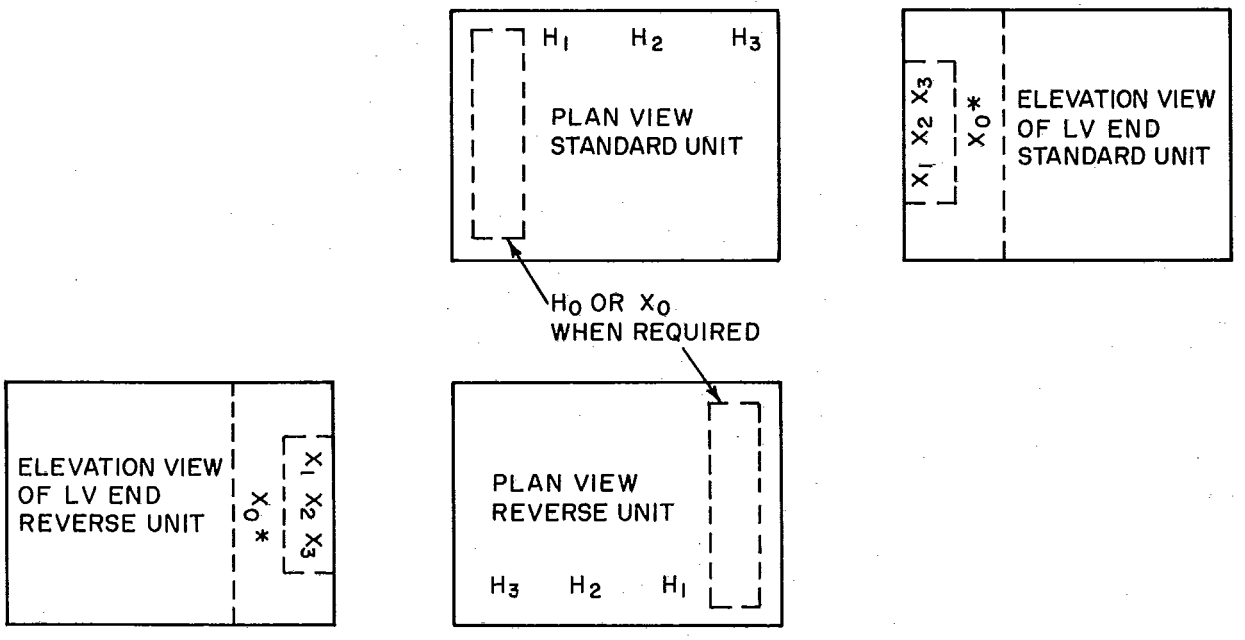

*Neutral shall be located within dotted zone.

Fig. 22
Terminal Markings and Locations for Unit Substation Transformers with High-Voltage Cover Bushings

Copyright National Electrical Manufacturers Association
Provided by IHS under license with NEMA
No reproduction or networking permitted without license from IHS

Not for Resale

Group 1
Angular Displacement 0°

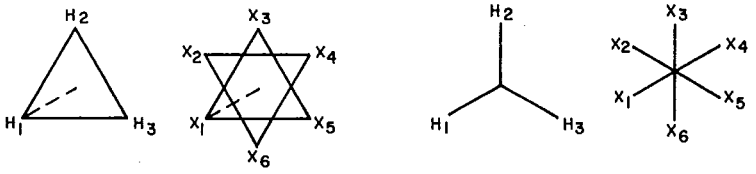

(a) (b)

Group 2
Angular Displacement 30°

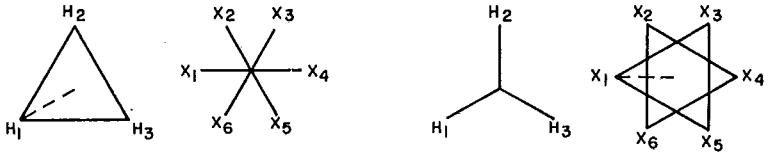

(c) (d)

Six-Phase Transformers without Taps

Group 3
Angular Displacement 30°

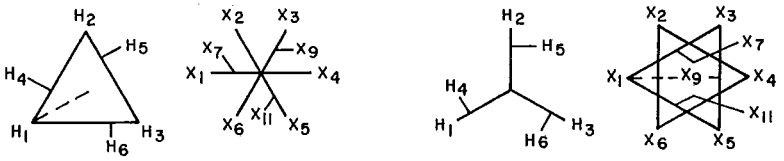

(e) (f)

Six-Phase Transformers with Taps

NOTES:

(1) This figure is included to illustrate the method of marking transformer terminals that are brought out of the case. Dash lines show angular displacement between high- and low-voltage windings.

(2) Angular displacement is the angle between a line drawn from neutral to H_1 and a line drawn from neutral to X_1 measured in a clockwise direction from H_1 to X_1.

Fig. 23
Terminal Markings and Voltage Phasor Diagrams for Usual Six-Phase Transformer Connections

Copyright National Electrical Manufacturers Association
Provided by IHS under license with NEMA
No reproduction or networking permitted without license from IHS

Not for Resale

American National Standards in the C57 Series

ANSI C57.12.00-1973 General Requirements for Distribution, Power, and Regulating Transformers (IEEE Std 462-1973)

ANSI C57.12.00a-1977 Temperature Tests for Transformers with Auxiliary Cooling (IEEE Std 462a-1977), Supplement to C57.12.00-1973 (IEEE Std 462-1973)

ANSI/IEEE C57.12.01-1979 American National Standard General Requirements for Dry-Type Distribution and Power Transformers

ANSI C57.12.10-1977 Requirements for Transformers 230 000 Volts and Below, 833/958 through 8333/10 417 kVA, Single-Phase, and 750/862 through 60 000/80 000/100 000 kVA, Three-Phase, including Supplement ANSI C57.12.10a-1978

ANSI C57.12.20-1974 Requirements for Overhead-Type Distribution Transformers 67 000 Volts and Below; 500 kVA and Smaller, including Supplement ANSI C57.12.20a-1978

ANSI C57.12.21-1969 Requirements for Pad-Mounted Compartmental Type Single-Phase Distribution Transformers (High-Voltage, 16 340GrdY/9430 Volts and Below; Low-Voltage, 240/120; 167 kVA and Smaller)

ANSI C57.12.22-1969 Requirements for Pad-Mounted Compartmental-Type, Self-Cooled, Three-Phase Distribution Transformers, High-Voltage, 16 340 Volts and Below; 2500 kVA and Smaller

ANSI C57.12.23-1978 Requirements for Underground-Type Single-Phase Distribution Transformers, 100 kVA and Smaller; High-Voltage 16 340GrdY/9430 Volts and Below; Low-Voltage 240/120

ANSI C57.12.24-1978 Requirements for Underground-Type Three-Phase Distribution Transformers; 2500 kVA and Smaller; High-Voltage 24 940GrdY/14 400 Volts and Below; Low Voltage 480 Volts and Below

ANSI C57.12.25-1975 Requirements for Pad-Mounted Compartmental-Type Single-Phase Distribution Transformers with Separable Insulated High-Voltage Connectors, High-Voltage, 24 940GrdY/14 400 Volts and Below; Low-Voltage, 240/120 Volts and Below; 167 kVA and Smaller

ANSI C57.12.26-1975 Requirements for Pad-Mounted Compartmental-Type, Self-Cooled, Three-Phase Distribution Transformers for Use with Separable Insulated High-Voltage Connectors, High-Voltage, 24 940GrdY/14 400 Volts and Below; 2500 kVA and Smaller

ANSI C57.12.30-1977 Requirements for Load-Tap-Changing Transformers 230 000 Volts and Below, 3750/4687 through 60 000/80 000/100 000 kVA, Three Phase

ANSI C57.12.40-1975 Requirements for Secondary Network Transformers, Subway and Vault Types (Liquid Immersed)

ANSI C57.12.70-1978 Terminal Markings and Connections for Distribution and Power Transformers

ANSI/IEEE C57.12.80-1978 Terminology for Power and Distribution Transformers

ANSI C57.12.90-1973 Test Code for Distribution, Power, and Regulating Transformers (IEEE Std 262-1973), including Supplement ANSI/IEEE C57.12.40a-1978

ANSI/IEEE C57.12.91-1979 American National Standard Test Code for Dry-Type Distribution and Power Transformers

ANSI C57.13-1968 Requirements for Instrument Transformers

ANSI C57.15-1968 Requirements, Terminology, and Test Code for Step-Voltage and Induction-Voltage Regulators

ANSI C57.16-1958 (R1971) Requirements, Terminology, and Test Code for Current-Limiting Reactors

ANSI C57.17-1965 (R1971) Requirements for Arc Furnace Transformers

ANSI C57.18-1964 (R1971) Requirements, Terminology, and Test Code for Pool-Cathode Mercury-Arc Rectifier Transformers

ANSI C57.21-1971 Requirements, Terminology, and Test Code for Shunt Reactors

ANSI C57.100-1974 Test Procedure for Thermal Evaluation of Oil-Immersed Distribution Transformers (IEEE Std 345-1972)

Appendixes to C57 Standards

(Not approved as American National Standards)

C57.91 Guide for Loading Mineral Oil-Immersed Overhead-Type Distribution Transformers with 55°C or 65°C Average Winding Rise, Appendix to C57.12.00-1973 (IEEE Std 462-1973)

C57.92 Guide for Loading Oil-Immersed Distribution and Power Transformers, Appendix to C57.12 standards

C57.93 Guide for the Installation and Maintenance of Oil-Immersed Transformers (NEMA TR5-1956), Appendix to C57.12 standards

C57.94 Guide for Installation and Maintenance of Dry-Type Transformers, Appendix to C57.12 standards

C57.95 Guide for Loading Oil-Immersed Step-Voltage and Induction-Voltage Regulators, Appendix to C57.15-1968

C57.96 Guide for Loading Dry-Type Distribution and Power Transformers, Appendix to C57.12 standards

C57.97 Guide for Preparation of Specifications for Large Power Transformers, With or Without Load-Tap-Changing, Appendix to C57.12 standards

C57.98 Guide for Transformer Impulse Tests (IEEE Std 93-1968), Appendix to C57.12.90

C57.99 Guide for Loading Dry-Type and Oil-Immersed Current-Limiting Reactors, Appendix to C57.16-1968 (R1971)

American National Standards Institute, Inc
1430 Broadway New York, N.Y. 10018

Copyright National Electrical Manufacturers Association
Provided by IHS under license with NEMA
No reproduction or networking permitted without license from IHS
Not for Resale