American National Standard

ANSI C57.12.40-1994

for Secondary Network Transformers

Subway and Vault Types (Liquid Immersed)—Requirements

National Electrical Manufacturers Association

1300 N. 17th Street
Suite 1847
Rosslyn, Virginia 22209
(703) 841-3200

American National Standard

Copyright National Electrical Manufacturers Association
Provided by IHS under license with NEMA
No reproduction or networking permitted without license from IHS

Not for Resale

STD.NEMA C57.12.40-ENGL 1994 ■ 6470247 0521145 763 ■

ANSI® C57.12.40-1994

AMERICAN NATIONAL STANDARD

for Secondary Network Transformers

Subway and Vault Types (Liquid Immersed)—Requirements

Prepared by:

Working Group 40 of the Underground Transformers and Network Protectors Subcommittee
IEEE Transformers Committee

National Electrical Manufacturers Association

Approved by:

American National Standards Institute

Copyright National Electrical Manufacturers Association
Provided by IHS under license with NEMA
No reproduction or networking permitted without license from IHS
Not for Resale

American National Standard

Approval of an American National Standard requires verification by ANSI that the requirements for due process, consensus, and other criteria for approval have been met by the standards developer.

Consensus is established when, in the judgment of the ANSI Board of Standards Review, substantial agreement has been reached by directly and materially affected interests. Substantial agreement means much more than a simple majority, but not necessarily unanimity. Consensus requires that all views and objections be considered, and that a concerted effort be made toward their resolution.

The use of American National Standards is completely voluntary; their existence does not in any respect preclude anyone, whether he has approved the standards or not, from manufacturing, marketing, purchasing, or using products, processes, or procedures not conforming to the standards.

The American National Standards Institute does not develop standards and will in no circumstances give an interpretation of any American National Standard. Moreover, no person shall have the right or authority to issue an interpretation of an American National Standard in the name of the American National Standards Institute. Requests for interpretations should be addressed to the secretariat or sponsor whose name appears on the title page of this standard.

CAUTION NOTICE: This American National Standard may be revised or withdrawn at any time. The procedures of the American National Standards Institute require that action be taken periodically to reaffirm, revise, or withdraw this standard. Purchasers of American National Standards may receive current information on all standards by calling or writing the American National Standards Institute.

Published by

National Electrical Manufacturers Association
1300 N. 17th Street, Rosslyn, Virginia 22209

© Copyright 1996 by the National Electrical Manufacturers Association. All rights including translation into other languages, reserved under the Universal Copyright Convention, the Berne Convention or the Protection of Literary and Artistic Works, and the International and Pan American Copyright Conventions.

No part of this publication may be reproduced in any form, in an electronic retrieval system or otherwise, without prior written permission of the publisher.

Printed in the United States of America

Copyright National Electrical Manufacturers Association
Provided by IHS under license with NEMA
No reproduction or networking permitted without license from IHS

Not for Resale

CONTENTS

Page

Foreword ... iii

1 Scope ... 1

2 Referenced and related American National Standards ... 1
2.1 Referenced American National Standards ... 1
2.2 Related American National Standards ... 2

Part I: Transformers With Three-Position Disconnecting and Grounding Switch ... 3

3 Ratings ... 3
3.1 Kilovolt-ampere ratings ... 3
3.2 Voltage ratings and tap ratings ... 3

4 Basic lightning impulse insulation levels and dielectric test levels ... 4

5 Percent impedance ... 4
5.1 Percent impedance ... 4
5.2 Tolerance on impedance ... 4
5.3 Tolerance on impedance on a tap ... 4

6 Audible sound levels ... 4

7 Tests ...
7.1 General ... 4
7.2 Dielectric tests ... 4
7.3 Reference temperature ... 4

8 Construction ... 5
8.1 Bushings and terminals ... 5
8.2 Switch and terminal chambers ... 11
8.3 Accessory equipment for transformer tanks ... 14
8.4 Angular displacement and terminal markings ... 15
8.5 Nameplate ... 15
8.6 Connection of transformer for shipment by the manufacturer ... 15
8.7 Tank ... 15

Part II: Transformers With Two-Position Grounding Switch ... 18

9 Rating ... 18
9.1 Kilovolt-ampere ratings ... 18
9.2 Voltage ratings and tap ratings ... 18

10 Basic lightning impulse insulation levels and dielectric test levels ... 18

11 Percent impedance ... 18
11.1 Percent impedance ... 18
11.2 Tolerance on impedance ... 19
11.3 Tolerance on impedance on a tap ... 19

Copyright National Electrical Manufacturers Association
Provided by IHS under license with NEMA
No reproduction or networking permitted without license from IHS
Not for Resale

12 Tests 19
12.1 General 19
12.2 Dielectric tests 19
12.3 Reference temperature 19

13 Construction 19
13.1 Bushings and terminals 19
13.2 High-voltage grounding switch 25
13.3 Accessory equipment 27
13.4 Angular displacement and terminal markings 29
13.5 Nameplate 31
13.6 Connection of transformer for shipment by the manufacturer 31
13.7 Tank 31

14 Audible sound levels 32

Copyright National Electrical Manufacturers Association
Provided by IHS under license with NEMA
No reproduction or networking permitted without license from IHS
Not for Resale

Foreword (This Foreword is not part of American National Standard C57.12.40-1994)

The Accredited Standards Committee on Transformers, Regulators, and Reactors, C57, has for a number of years been developing and correlating standards on transformers and regulators. The data used in this work have been gathered from many sources, including the standards of the Institute of Electrical and Electronics Engineers and the National Electrical Manufacturers Association, reports of committees of the Edison Electric Institute, and others.

The graphics and detailed work required to produce this standard were provided by Frank Paladino and Anibal Rosa, both from Consolidated Edison Company of New York.

Suggestions for improvement of this standard will be welcome. They should be sent to the National Electrical Manufacturers Association, 1300 N. 17th Street, Rosslyn, Virginia 22209.

This standard was processed and approved for submittal to ANSI by Accredited Standards Committee C57 on Transformers, Regulators, and Reactors. Committee approval of the standard does not necessarily imply that all committee members voted for its approval. At the time it approved this standard, the C57 Committee had the following members:

P. J. Hopkinson, Chairman
J. A. Gauthier, Secretary

Organization Represented	*Name of Representative*
U.S. Dept. of Energy Western Area Power Administration	Kenneth C. Wolohon
Dept. of the Navy, Civil Engineer Corps.	Howard Stickley
Dept. of the Interior, Bureau of Reclamation	R. Chadwick
Dept. of Agriculture, R.E.A.	J. Bohlk
Tennessee Valley Authority	F. Lewis
Underwriters Laboratories, Inc.	W. O'Grady
Electric Light & Power Company (EL&P)	P. E. Orehek T. Diamantis K. S. Hanus J. W. Howard M. Mingoia (Alt.) G. Paiva J. Sullivan
Institute of Electrical and Electronics Engineers	L. Savio J. D. Borst J. Davis J. H. Harlow H. Smith (Alt.) R. A. Veitch

Copyright National Electrical Manufacturers Association
Provided by IHS under license with NEMA
No reproduction or networking permitted without license from IHS
Not for Resale

National Electrical Manufacturers Association	P. J. Hopkinson
	G. D. Coulter
	P. Dewever
	S. Douglas (Alt.)
	K. R. Linsley
	A. Ghafourian
	R. Plaster (Alt.)
	Harral Robin
	Susan Endersbe

Copyright National Electrical Manufacturers Association
Provided by IHS under license with NEMA
No reproduction or networking permitted without license from IHS
Not for Resale

for Secondary Network Transformers Subway and Vault Types (Liquid Immersed)—Requirements

1 Scope

1.1 This standard is intended for use as a basis for establishing the performance, interchangeability, and safety of the equipment covered and to assist in the proper selection of such equipment.

1.2 This standard covers certain electrical, dimensional, and mechanical characteristics and takes into consideration certain safety features of three-phase, 60Hz, liquid-immersed, secondary network transformers, subway and vault types, rated 2500 kVA and smaller; high voltage 34 400 volts and below; low-voltage 216Y/125 volts and 480Y/277 volts.

A subway-type network transformer is one that is suitable for frequent or continuous submerged operation.

A vault-type network transformer is one that is suitable for occasional submerged operation.

2 Referenced and related American National Standards

This standard is intended to be used in conjunction with the following American National Standards.

2.1 Referenced American National Standards

When an American National Standard referred to in this document is superseded by a revision approved by the American National Standards Institute, Inc., the revision shall not apply. The referenced standard and the specific referenced edition shall be the applicable referenced standard until the new version of the referenced document is incorporated by formal action or appropriate revision of the citing standard. All characteristics, definitions, tests and voltage designations, except as specifically covered in this Standard, shall be in accordance with the American National Standards listed below.

ANSI/ASME B1.1-1989, *Unified Inch Screw Threads (UN and UNR Thread Form)*

ANSI/IEEE C17.12.00-1987, *General Requirements for Liquid-Immersed Distribution, Power and Regulating Transformers*

ANSI/IEEE C57.12.80-1978 (R 1986), *Terminology for Power and Distribution Transformers*[1]

ANSI/IEEE C57.12.90-1987, *Liquid-Immersed Distribution, Power and Regulating Transformers, and Distribution and Power Transformer Shop-Circuit Test Guide*

ANSI/IEEE C57.92-1981, *Guide for Loading Mineral Oil-Immersed Power Transformers Up to and Including 100 MVA with 55°C or 65°C Winding Rise*

[1] Transformer terminology as set forth in ANSI/IEEE C57.12.40-1978 shall apply. Other electrical terms are defined in ANSI/IEEE 100-1988.

Copyright National Electrical Manufacturers Association
Provided by IHS under license with NEMA
No reproduction or networking permitted without license from IHS Not for Resale

2.2 Related American National Standards

These standards are listed here for information only and are not essential for the completion of the requirements of this standard.

ANSI C57.12.70-1978 (R 1987), *Terminal Markings and Connections for Distribution and Power Transformers*

ANSI/ASME B1.20.1-1983, *Pipe Threads-General Purpose (Inch)*

ANSI/IEEE 100-1988, *Dictionary of Electrical and Electronics Terms*

Copyright National Electrical Manufacturers Association
Provided by IHS under license with NEMA
No reproduction or networking permitted without license from IHS
Not for Resale

Part I: Transformers With Three-Position Disconnecting and Grounding Switch

3 Ratings

3.1 Kilovolt-ampere ratings

Kilovolt-ampere ratings at 55°C and 65°C average winding temperature rises shall be as follows.

55°C	65°C
300	336
500	560
750	840
1000	1120
1500	1680
2000	2240
2500	2800

The 55°C rating is based on not exceeding a 55°C average winding temperature rise above standard ambient, as specified in ANSI/IEEE C57.12.00. The 65°C rating is based on not exceeding a 65°C average winding temperature rise or an 80°C hot-spot temperature rise. The temperature rise of the insulating liquid shall not exceed 65°C, measured near the top of the tank.

These dual-rated transformers are based on the use of insulation systems that allow continuous operation at a 65°C rise and 112% of the 55°C base rating.[2]

The base rating shall be the 55°C average winding temperature rise. All operating characteristics are referred to the base rating.

3.2 Voltage rating and tap ratings

Preferred voltage ratings and taps shall be in accordance with table 1. All taps shall be at rated kilovolt-amperes.

Table 1 – Preferred ratings for subway and vault-type secondary network transformers

Preferred Nominal System Voltage	BIL kV	Rating	Transformer High-Voltage Taps		kVA Ratings for Low-Voltage Ratings of:	
			Above	Below	216Y/125	480Y/277
2400/4160Y	60	4160	None	None	300–1000	500–1000
		4160Y/2400	None	None	300–1000	500–1000
12 000	95	12 200	None	11 700/11 400/11 100/10 800	- - -	500–2500
			12 600/ 12 300	11 700/11 400	- - -	500–2500
13 200 or 7620/13 200Y	95	13 200	None	12 870/12 540/12 210/11 880	300–1000	- - -
			13 860/13 530	12 870/12 540	- - -	500–2500
	95	13200Y/7620*	None	12 870/12 540/12 210/11 880	300–1000	- - -
			13 860/13 530	12 870/12 540	- - -	500–2500
14 400	95	14 400	None	14 040/13 680/13 320/12 960	300–1000	- - -
			15 120/14 760	14 040/13 680	- - -	500–2500
23 000	150	22 900	24 100/23 500	22 300/21 700	500–1000	500–2500
34 500	200	34 400	36 200/35 300	33 500/32 600	500–1000	500–2500

*High-voltage and low-voltage neutrals are internally connected by means of a removable link.

NOTES

1 Kilovolt-ampere ratings are 300, 500, 750, 1000, 1500, 2000, and 2500. Kilovolt-ampere ratings separated by a dash indicate that all intervening ratings are included.

2 All windings are delta-connected unless otherwise indicated.

[2] For loading conditions, see *Guide for Loading Mineral Oil-Immersed Power Transformers with 55° or 65°C Winding Rise*, C57.92, using the method for transformers with known specific characteristics covered therein. Available from the National Electrical Manufacturers Association, 1300 N. 17th Street, Rosslyn, Virginia 22209.

Copyright National Electrical Manufacturers Association
Provided by IHS under license with NEMA
No reproduction or networking permitted without license from IHS
Not for Resale

4 Basic lightning impulse insulation levels and dielectric test levels

4.1 Basic lightning impulse insulation levels (BIL) shall be in accordance with table 1.

4.2 Dielectric test levels shall be in accordance with distribution transformer levels in ANSI/IEEE C57.12.00.

NOTE—Cable terminations supplied by the user should provide suitable coordination with the transformer insulation level.

5 Percent impedance

5.1 Percent impedance

The percent impedance on the rated voltage connection shall be as follows.

kVA Rating	Percent Impedance
300–1000	5.0
1500–2500	7.0

5.2 Tolerance on impedance

The tolerance shall be as specified in ANSI/IEEE C57.12.00.

5.3 Tolerance on impedance on a tap

The percent departure of the actual impedance at the rated voltage shall not be greater than the total tap voltage range expressed as a percentage of the rated voltage.

6 Audible sound levels

Transformers shall be designed so that the average sound level does not exceed the values given in table 2, measured according to ANSI/IEEE C57.12.90.

Table 2 – Audible sound levels

Equivalent Two-Winding kVA* 200 kV BIL and Below	Average Sound Level (decibels) dB(A)
300	55
500	56
750	57
1000	58
1500	60
2000	61
2500	62

*Class OA Ratings

7 Tests

7.1 General

Routine tests shall be made in accordance with ANSI/IEEE C57.12.00 and ANSI/IEEE C57.12.90.

7.2 Dielectric tests

The applied potential test and the induced potential test as specified in ANSI/IEEE C57.12.00 shall both be performed.

7.3 Reference temperature

The reference temperature to which load losses, impedance, regulation and efficiency are corrected shall be 75°C.

Copyright National Electrical Manufacturers Association
Provided by IHS under license with NEMA
No reproduction or networking permitted without license from IHS
Not for Resale

8 Construction

8.1 Bushings and terminals

8.1.1 Bushings

8.1.1.1 The high-voltage bushings between the main tank and the switch chamber shall be sealed to prevent interchange of liquids between compartments. The insulators of the bushings shall be replaceable from the switch chamber.

8.1.1.2 The high-voltage bushings between the switch chamber and the terminal chamber (item 30, figure 1) shall be sealed to prevent interchange of liquids or compounds between compartments. They shall be the stud type, and the interior distance from the top of the stud to the top of the terminal chamber shall be as specified in figure 1.

8.1.1.3 Low-voltage bushings shall be brazed or welded to the tank. Bushings shall be located as indicated in figure 2. The bushings shall be externally replaceable.

8.1.1.4 Low-voltage bushings shall be mounted in a flanged throat (item 10, figure 2) suitable for connecting to a network protector. A gasket shall be provided for use between the throat and the protector. Bushings spacing, throat dimensions, terminal details, and application shall be as follows.

Low-Voltage Rating (kVA)		
216Y/125	**480Y/277**	**Figure Number**
300, 500	500, 750, 1000	3
750, 1000	1500, 2000, 2500	4

Copyright National Electrical Manufacturers Association
Provided by IHS under license with NEMA
No reproduction or networking permitted without license from IHS
Not for Resale

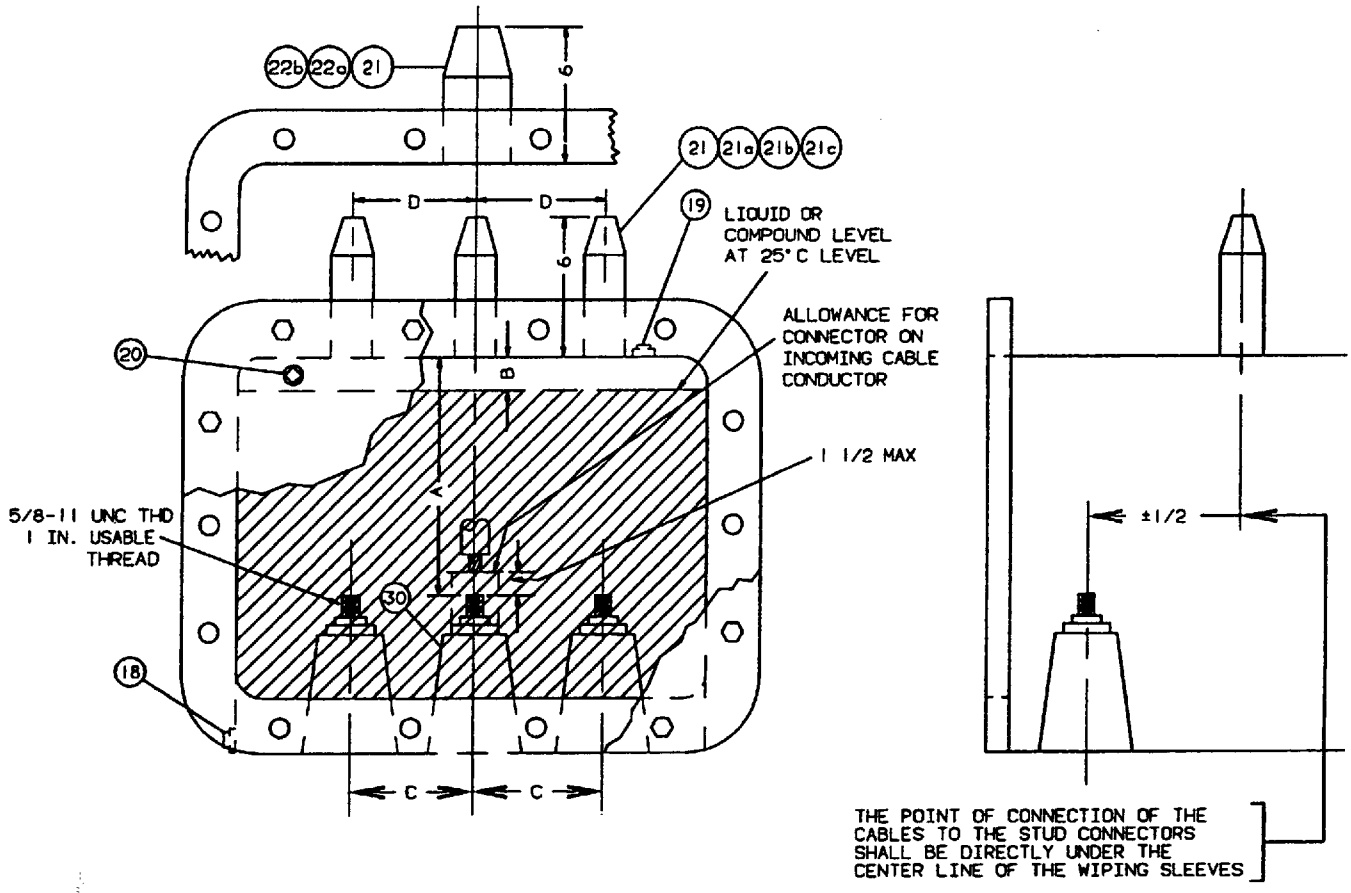

High Voltage BIL (kV)	Dimensions		
	A (min.)	B (max.)	C (min.)
95 and below	10-1/2	1/2	4-1/2
150	14-1/2	1	6
200	18-1/2	1	6-1/2

Item Number	Section Reference	Description
18	8.2.5.1.1	Drain plug
19	8.2.5.1.1	Filling plug
20	8.2.5.1.2	Vent and level plug
21	8.2.5.2	High-voltage cable entrance
21a	8.2.5.2.1	Three single-conductor wiping sleeves (brazed or welded on)
21b	8.2.5.2.2	Three single-conductor entrance fittings (bolted on)
21c	8.2.5.2.3	Separable insulated connectors (plug-in bushings or wells)
22a	8.2.5.2.1	One three-conductor wiping sleeve (brazed or welded on)
22b	8.2.5.2.2	One three-conductor entrance fitting (bolted on)
30	8.1.1.2	High-voltage bushings

NOTES

1 All dimensions are in inches.

2 Dimension "C" = "D" when wiping sleeves are used and may vary by ±1/2" when wiping sleeves are not used.

(a)
Chamber

Figure 1 – High-voltage terminal chamber details

Copyright National Electrical Manufacturers Association
Provided by IHS under license with NEMA
No reproduction or networking permitted without license from IHS
Not for Resale

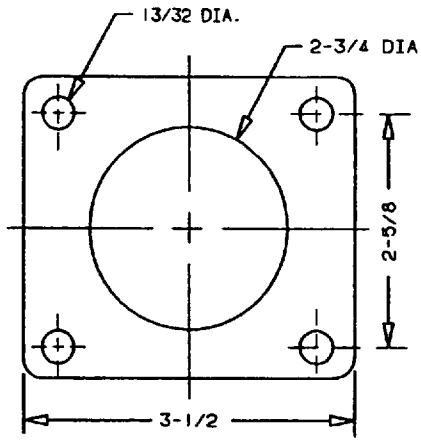

(b)
BASE SIZE 3

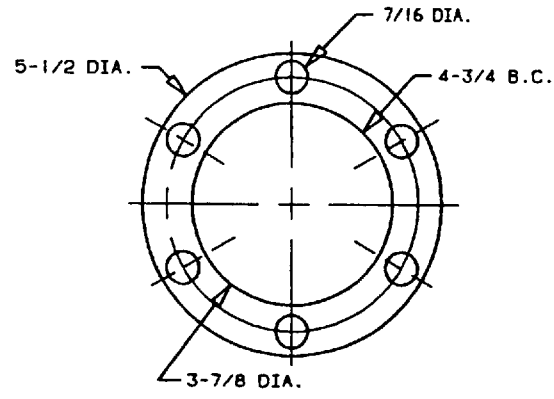

(c)
BASE SIZE 4

Wiping sleeve dimensions (brazed or welded on)

	Inside Diameter	Taper to	Length of Taper
Three single-conductor wiping sleeves (item 21a)	1-3/4	1-1/8	1-1/2
One three-conductor wiping sleeve (item 22a)	3-1/2	1-1/2	2-1/4

Entrance fitting (bolted on)

Three single-conductor entrance fittings (item 21b)	maximum base size 3 (fig. 1b)
One three-conductor entrance fitting (item 22b)	maximum base size 4 (fig. 1c)

NOTE: All dimensions are in inches.

Figure 1 - continued

Copyright National Electrical Manufacturers Association
Provided by IHS under license with NEMA
No reproduction or networking permitted without license from IHS
Not for Resale

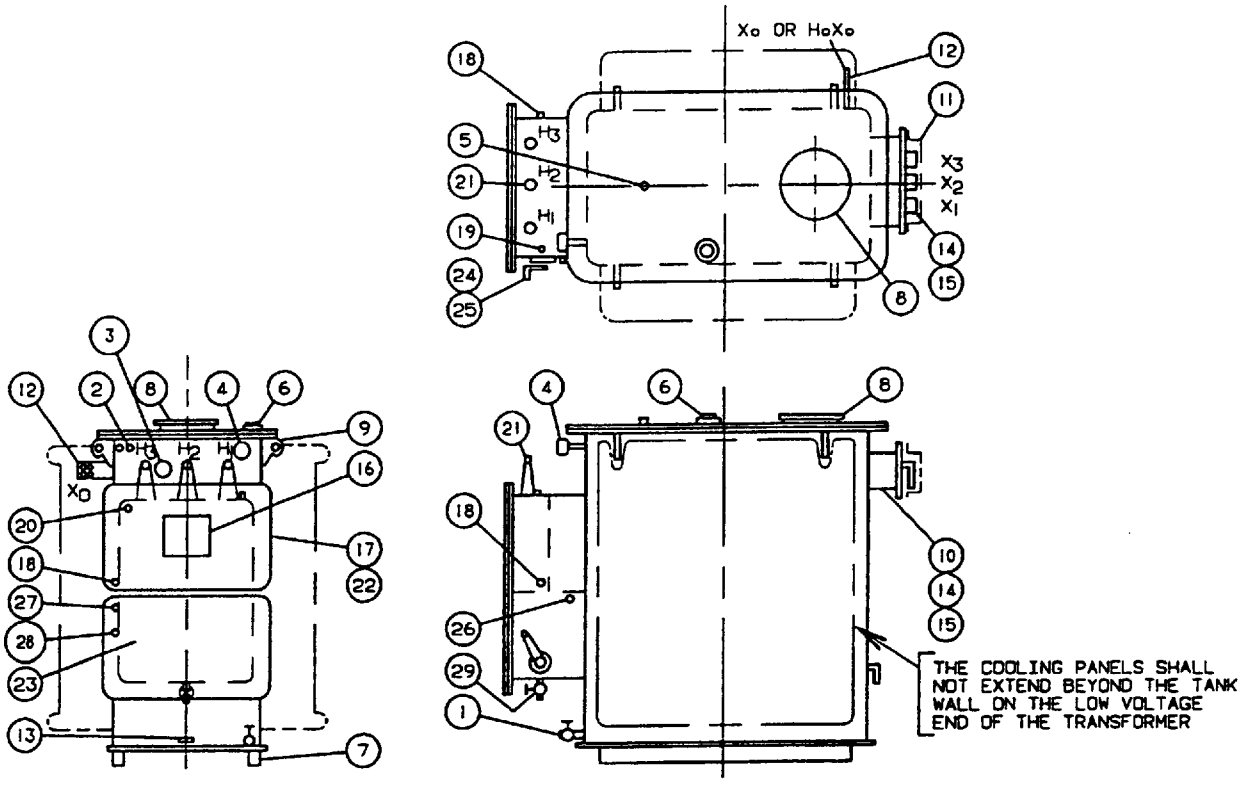

Compartment	Item Number	Section Reference	Description
Transformer tank	1	8.3.5.1	Combination drain and bottom filler valve
	2	8.3.2	Provision for air test
	3	8.3.3	Welded-on non-gasketed type magnetic liquid-level indicator
	4	8.3.4	Dial-type thermometer without alarm contacts
	5	8.3.5.2	Filling plug and upper filter press connection
	6	8.3.1	Tap changer
	7	8.3.7	Transformer subbase
	8	8.7.1	Handhole
	9	8.3.6.2	Lifting lugs
	10	8.1.1.4	Throat
	11	8.1.1.5	Shipping guard
	12	8.1.2.2	Low-voltage neutral grounded to tank
	13	8.7.5	External grounding provision
	14	Figure 3	Low-voltage throat for mounting network protector
	15	Figure 4	Low-voltage throat for mounting network protector
High-voltage Terminal chamber	16	8.5	Nameplate location
	17	8.2.5	High-voltage terminal chamber
	18	8.2.5.1.1	Drain plug
	19	8.2.5.1.1	Filling plug
	20	8.2.5.1.2	Vent and level plug
	21	8.2.5.2	High-voltage cable entrance
	22	Figure 1	High-voltage terminal chamber details
High-voltage Switch chamber	23	8.2.1	High-voltage switch chamber
	24	8.2.2, 8.2.3	Electrical and mechanical features of the switch
	25	8.2.3.4	Operating handle
	26	8.2.4.1	Filling plug
	27	8.2.4.2	Provision for air test
	28	8.2.4.3	Welded-on non-gasketed type magnetic liquid-level indicator
	29	8.2.4.4	Drain valve

Figure 2 – Location of accessories (three-position disconnecting and grounding switch)

Copyright National Electrical Manufacturers Association
Provided by IHS under license with NEMA
No reproduction or networking permitted without license from IHS
Not for Resale

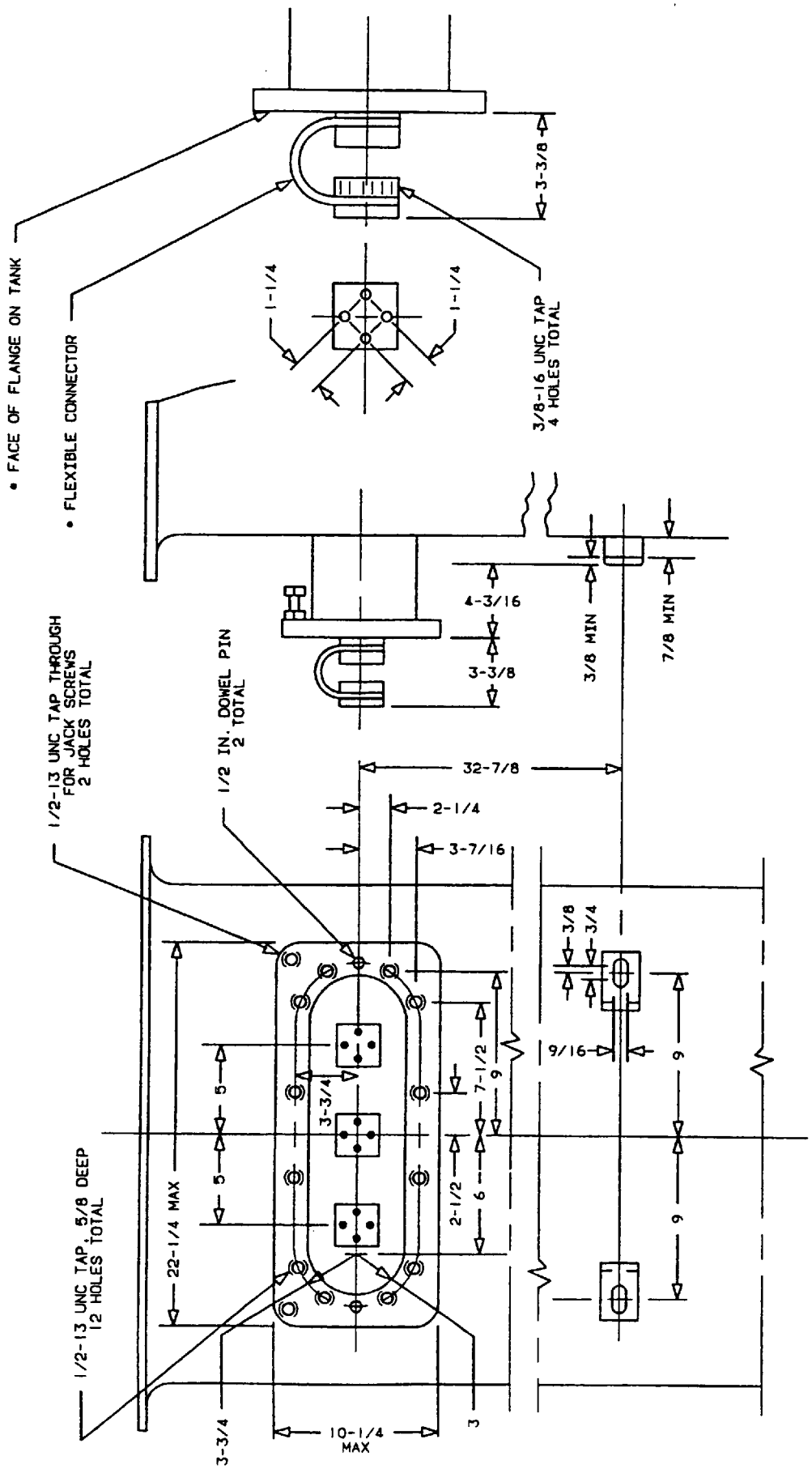

Figure 3 – Transformer throat for mounting network protector

Low-voltage 216Y/250 volts, 300–500 kVA
Low-voltage 480Y/277 volts, 500–1000 kVA

Copyright National Electrical Manufacturers Association
Provided by IHS under license with NEMA
No reproduction or networking permitted without license from IHS

Not for Resale

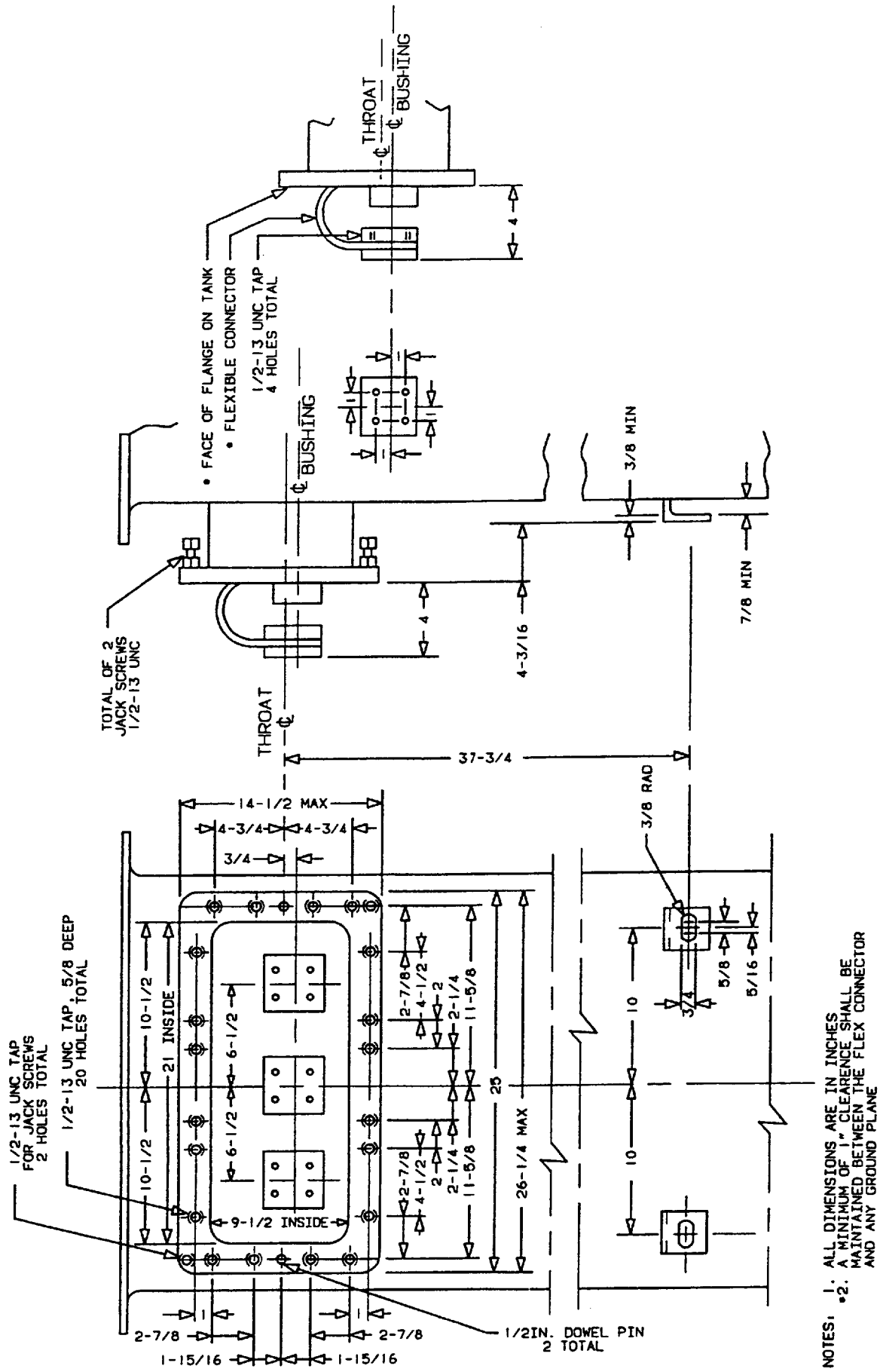

Figure 4 — Transformer throat for mounting network protector

Low-voltage 216Y/250 volts, 750–1000 kVA
Low-voltage 480Y/277 volts, 1500–2500 kVA

Copyright National Electrical Manufacturers Association
Provided by IHS under license with NEMA
No reproduction or networking permitted without license from IHS
Not for Resale

8.1.1.5 LV throat shipping cover (item 11, figure 2)

A sealed sheet steel cover pan, fully flat gasketed, shall be installed over the LV throat to prevent mechanical and corrosive damage to the LV bushings, external connectors and throat flange during shipment and storage outdoors. The throat cover shall be bolted securely to the flange of the LV throat. The cover shall be completely enclosed to prevent entrance of air-borne chemicals or moisture that may corrode these external parts. The cover shall be painted.

8.1.2 Neutral termination

8.1.2.1 High and low-voltage neutral

Transformers having wye-connected high-voltage windings shall have the high-voltage neutral internally connected to the low-voltage neutral with provision for opening this connection for testing.

8.1.2.2 Low-voltage neutral (item 12, figure 2)

The neutral of the low-voltage winding shall be bolted to a boss brazed or welded to the inside of the tank wall. An external terminal shall be provided, solidly bonded to the tank wall directly opposite the internal boss, as shown in figure 2. The current rating of the neutral connection and terminal shall be not less than that of the low-voltage phase connection. The terminal shall be provided with 9/16-inch holes on 1-3/4-inch centers, as follows:

Low-Voltage Rating (kVA)		
216Y/125	480Y/277	Number of Holes
300, 500, 750, 1000	500, 750, 1000, 1500, 2000, 2500	4 6

8.2 Switch and terminal chambers

The high-voltage switch chamber shall be in accordance with 8.2.1 through 8.2.4; the high-voltage terminal chamber shall be in accordance with 8.2.5.

8.2.1 High-voltage switch chamber (item 23, figure 2)

The high-voltage disconnecting and grounding switch chamber shall contain a three-pole, three-position switch for disconnecting the high-voltage feeder from the transformer and for connecting the incoming feeder to the ground position. The chamber shall be welded on the high-voltage end of the transformer. Chamber components shall provide corrosion resistance equivalent to not less than 5/16-inch-thick copper bearing steel (minimum copper content, 0.20%). A bolted and gasketed cover shall be provided. Covers shall be equipped with handles and guide pins. Where cemented gaskets are used, means for breaking the seal shall be provided.

8.2.2 Electrical characteristic of the switch (item 24, figure 2)

8.2.2.1 Continuous rating

The 60-Hz rating of the switch shall be 200 amperes.

8.2.2.2 Short-circuit rating

In the ground position, the switch shall be capable of withstanding a short-circuit current of 15,000 amperes rms symmetrical for 5 seconds without damage. In the closed position, it shall carry the full short-circuit duty of the transformer winding.

8.2.2.3 Interrupting rating

The disconnecting and grounding switch has no interrupting rating.

8.2.2.4 Dielectric strength in closed position

The switch shall be connected to the transformer while dielectric tests are being performed on the transformer.

Copyright National Electrical Manufacturers Association
Provided by IHS under license with NEMA
No reproduction or networking permitted without license from IHS
Not for Resale

8.2.2.5 Dielectric strength in open position
The dielectric strength of the switch in open position shall be such as to permit dc 5-minute cable tests in the field as follows:

15 kV switches	45kV
24 kV switches	65kV
34.5kV switches	85 kV

8.2.3 Mechanical features of the switch (item 24, figure 2)

8.2.3.1 Switch position
The switch shall be provided with three operating positions: open, closed, and ground. These positions shall be indicated by suitable markings located near the external operating handle and visible from the high-voltage end of the transformer.

8.2.3.2 Operating sequence
The sequence of operation shall be open, closed, and ground, and the switch shall be so designed that when it is moved from open to ground or from ground to open a pause is enforced in the closed position to allow time for the electrical interlock to engage if the transformer is energized.

8.2.3.3 Electrical interlock
An electrical interlock shall prevent movement of the switch from any position when the transformer is energized.

8.2.3.3.1 Interlock testing
The electrical interlock coil shall be tested with, and shall withstand, the same 60-Hz, 1-minute dielectric test as the low-voltage winding.

8.2.3.3.2 Operating values
The interlock shall pick up and dropout at the following voltages:

Coil Voltage	Maximum Pick-Up Voltage	Minimum Drop-Out Voltage	Maximum Excitation Voltage
125	90	15	140
277	200	33	310

8.2.3.3.3 Interlock assembly
The interlock assembly shall be such that, with the locking lug or latch mechanism blocked and the coil energized at the voltage indicated, the functional performance of the coil will not be impaired.

8.2.3.4 Operating handle (item 25, figure 2)
The switch operating handle shall be provided with a latch to prevent accidental movement of the switch. Means shall be provided for padlocking the switch in each position.

8.2.4 Accessory equipment for high voltage switch chamber
Accessory equipment for the high-voltage switch chamber shall be included and shall be located approximately as shown in figure 2.

8.2.4.1 Filling plug (item 26, figure 2)
The filling plug shall consist of a 1-inch NPT female opening with a 1-inch NPT plug.

8.2.4.2 Air test provision (item 27, figure 2)
The air test provision shall consist of a 1/2-inch NPT opening equipped with a 1/2-inch NPT pipe plug and shall be located above the 85°C liquid level.

Copyright National Electrical Manufacturers Association
Provided by IHS under license with NEMA
No reproduction or networking permitted without license from IHS
Not for Resale

8.2.4.3 Welded-on nongasketed-type magnetic liquid-level Indicator (item 28, figure 2)
The diameter of the dial (inside bezel) shall be 3-1/4 inches ±1/4 inch. The gage shall be the submersible type and shall be welded to the tank, eliminating tank gaskets. The gage shall have a dark dial face with light markings and a light indicating hand. The dial markings shall show the 25°C level and the minimum and maximum levels. The words "Liquid Level" shall be on the dial or on a suitable nameplate mounted adjacent to the indicator.

8.2.4.4 Drain valve (item 29, figure 2)
The valve shall be of the globe type and shall be suitable for use with the insulating fluid used. The drain valve shall be 1 inch in size and shall have 1-inch NPT threads and a pipe plug in the outer end.

8.2.4.5 Material and installation
All valves and pipe fittings shall be of corrosion-resistant material and shall be installed with nonconducting thread sealer.

8.2.5 High-voltage terminal chamber (item 17, figure 2)
The high-voltage terminal chamber shall be welded to the high-voltage switch chamber or the tank, or both. Chamber components shall provide corrosion resistance equivalent to not less than 5/16-inch-thick copper-bearing steel (minimum copper content, 0.20%). A bolted and gasketed cover shall be provided. Covers shall be equipped with handles and guide pins. Where cemented gaskets are used, means for breaking the seal shall be provided. Liquid or compound for the terminal chamber is not supplied.

8.2.5.1 Accessory equipment for high-voltage terminal chamber
Accessory equipment for the high-voltage terminal chamber shall be included and shall be located as shown in figure 1.

8.2.5.1.1 Filling and drain plugs (items 18 and 19, figures 1 and 2)
The high-voltage terminal chamber shall have 1-inch NPT female openings provided with pipe plugs.

8.2.5.1.2 Vent and level plug (item 20, figures 1 and 2)
A 1/4-inch NPT opening with a pipe plug shall be provided at the 25°C liquid or compound level.

8.2.5.1.3 Material and installation
Pipe fittings and plugs shall be of corrosion-resistant material and shall be installed with nonconducting thread sealer.

8.2.5.2 High-voltage cable entrance (item 21, figures 1 and 2)
The high-voltage cable entrance shall be located as shown in figures 1 and 2.

8.2.5.2.1 Sleeves (items 21a and 22a, figure 1)
Entrance shall be by means of either three single-conductor or one three-conductor straight, tinned, tapered wiping sleeve or sleeves of brass, bronze, or copper that are brazed or welded to the terminal chamber. Three single conductor sleeves or one three-conductor sleeve shall be provided as specified.

8.2.5.2.2 Fittings (items 21b and 22b, figure 1)
Entrance shall be by means of either three single-conductor or one three-conductor bolted-on entrance fittings. Three single-conductor or one three-conductor fitting shall be provided as specified.

8.2.5.2.3 Bushings and bushing wells (item 21c, figure 1)
Entrance shall be by means of bushings or bushing wells for connection to the distribution system through adapters or separable insulated connectors, or both. Adapters and separable insulated connectors are not covered by this standard.

Copyright National Electrical Manufacturers Association
Provided by IHS under license with NEMA
No reproduction or networking permitted without license from IHS
Not for Resale

8.3 Accessory equipment for transformer tanks

Accessory equipment is that equipment which shall be provided as part of the transformer. The approximate location of such equipment is shown in figure 2.

8.3.1 Tap changer (item 6, figure 2)

A tap changer for de-energized operation shall be provided. Each tap changer position and the associated tap voltage shall be clearly identifiable by reference to nameplate information. All positions of the tap changer shall be operative positions. The tap changer shall be of sealed construction such that the integrity of the main tank seal is not compromised at any time. The tap changer shall be designed with an external operating means available under a protective cap on top of the main tank. An indicator shall clearly show the tap position when the cap is removed.

8.3.2 Air test provision (item 2, figure 2)

The air test provisions shall consist of 1/2-inch NPT opening equipped with 1/2-inch NPT pipe plug and shall be located above the 85°C liquid level.

8.3.3 Welded-on nongasketed-type magnetic liquid-level indicator (item 3, figure 2)

The diameter of the dial (inside bezel) shall be 3-1/4 inches ±1/4 inch. The gage shall be the submersible type and welded to the tank, eliminating tank gaskets. The gage shall have a dark dial face with light markings and a light indicating hand. The dial markings shall show the 25°C level and the minimum and maximum levels. The words "Liquid Level" shall be on the dial or on a suitable nameplate mounted adjacent to the indicator.

8.3.4 Dial-type thermometer without alarm contacts (item 4, figure 2)

The diameter of the dial (inside bezel) shall be 4-1/2 inches ±1 inch. The thermometer shall be the direct-stem type, mounted in a closed well at a suitable level to indicate the top liquid temperature. The thermometer shall have a dark dial face with light markings, a light-colored indicating hand, and an orange-red maximum indicating hand, with provision for resetting. The dial markings shall cover the range from 0°C to 120°C. The words "Liquid Temperature" shall be on the dial or on a suitable nameplate mounted adjacent to the indicator.

8.3.5 Valves, sampling devices, and filter press connections

8.3.5.1 Combination drain and bottom filter valve (item 1, figure 2)

The valve shall be of the globe type and shall be suitable for use with the insulating fluid of the transformer. The drain valve shall be 1 inch in size and shall have 1-inch NPT threads and a pipe plug in the outer end.

8.3.5.2 Filling plug and upper filter press connection (item 5, figure 2)

The filling plug and upper filter press connection shall be located in the cover and shall consist of a 1-inch NPT female opening with 1-inch NPT plug.

8.3.5.3 Material and installation

All valves, fittings, pipe plugs, and bushings shall be of corrosion-resistant material and shall be installed with nonconducting thread sealer.

Copyright National Electrical Manufacturers Association
Provided by IHS under license with NEMA
No reproduction or networking permitted without license from IHS
Not for Resale

8.3.6 Lifting, moving, and jacking provisions

8.3.6.1 Safety factor

Lifting provisions shall be designed to provide a safety factor of 5. This safety factor is the ratio of the ultimate stress of the material used to the working stress. The working stress is the maximum combined stress developed in the lifting provisions by the static load of the completely assembled transformer.

8.3.6.2 Lifting lugs (item 9, figure 2)

Four lifting lugs shall be arranged to facilitate lifting the transformer with or without the network protector attached. The lugs shall be provided with a suitable hole for attaching a 1-inch clevis.

8.3.7 Transformer with subbase (item 7, figure 2)

The transformer subbase shall consist of bars parallel to the long axis of the transformer. The subbase shall provide a 1-1/2-inch minimum clearance from the floor to the tank bottom, with corners left clear for jacking.

8.4 Angular displacement and terminal markings

8.4.1 Angular displacement

The angular displacement between high-voltage and low-voltage terminal voltages of three-phase transformers with wye-wye connections shall be 0 degrees. The angular displacement between high-voltage and low-voltage terminal voltages of three-phase transformers with delta-wye connections shall be 30 degrees, with the high-voltage leading the low voltage. The angular displacement between voltages shall be in accordance with figure 5.

8.4.2 Terminal markings

External high-voltage and low-voltage terminal markings shall be in accordance with figure 5.

8.5 Nameplate (item 16, figure 2)

The nameplate shall conform to the requirements of the nameplate "C" as described in ANSI/IEEE C57.12.00, modified to include the following:

a) type (subway or vault)
b) the words "Network Transformer"
c) approximate gallons of liquid in switch
d) approximate gallons of liquid in transformer
e) interlock coils and connections
f) type of high-voltage switch

8.6 Connections of transformer for shipment by the manufacturer

The transformer shall be shipped connected for the rated high voltage.

8.7 Tank

The transformer tank shall be of sealed construction, consisting of a welded main cover equipped with a handhole cover (see 8.7.1). The tank shall be of sufficient strength to withstand a pressure of 7 psig without permanent deformation. The completely assembled transformer shall be designed to withstand, without permanent deformation, a pressure resulting from operation at rated kilovolt-amperes and ambient temperature as specified in 3.1, which pressure shall not exceed 7 psig.

The completely assembled transformer shall be tested for leaks at a minimum of 7 psig above the static head of liquid for not less than 6 hours. Alternative methods for leak detection may be specified.

Copyright National Electrical Manufacturers Association
Provided by IHS under license with NEMA
No reproduction or networking permitted without license from IHS
Not for Resale

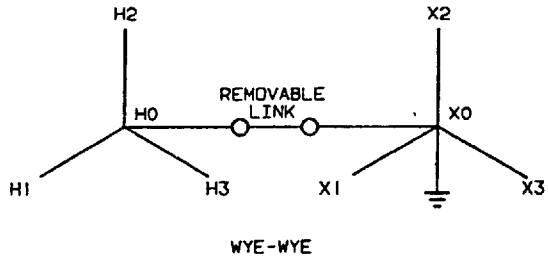

WYE-WYE

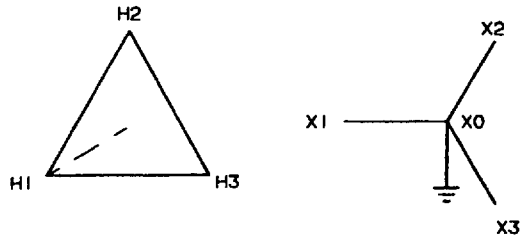

DELTA-WYE

(a)

ANGULAR DISPLACEMENTS

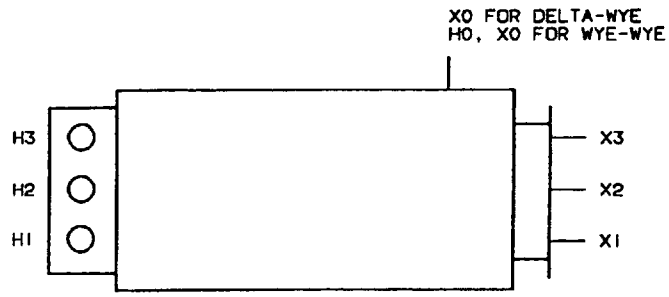

(b)

TERMINAL MARKINGS

Figure 5 – Angular displacement and terminal markings (three-position disconnecting and grounding switch)

Copyright National Electrical Manufacturers Association
Provided by IHS under license with NEMA
No reproduction or networking permitted without license from IHS

Not for Resale

8.7.1 Handhole cover (item 8, figure 2)

A handhole with a welded cover shall be provided for disconnecting the neutral or neutrals for test and for mounting pressure-relief device when present. A welded cover shall be furnished unless a gasketed cover is specified.

8.7.2 Corrosion resistance

Tank components shall provide corrosion resistance equivalent to not less than the following thicknesses of copper-bearing steel (minimum copper content, 0.20%):

Component	Subway Type (inches)	Vault Type (inches)
Tank wall	5/16	5/16
Auxiliary coolers	5/16	3/32
Cover	1/2	1/2
Tank bottom	1/2	1/2

8.7.3 Dimensions

Dimensions, including the low-voltage flexible connectors, (without the network protector attached), shall not exceed those shown in table 3. These dimensions are intended to guide the user in planning vaults capable of accommodating all current designs of the network transformers covered by this standard.

Table 3 – Maximum tank dimensions (inches)

For Mineral Oil-Filled Units												
15 000 Volts and Below					22 900 Volts				34 400 Volts			
kVA Rating	W	L	H_c*	Throat H †	W	L	H_c*	Throat H †	W	L	H_c*	Throat H †
300	39	78	67	42	—	—	—	—	—	—	—	—
500	44	78	70	48	46	87	70	55	49	94	77	58
750	47	84	74	55	48	93	74	61	51	100	80	68
1000	52	86	84	57	55	97	78	60	58	105	90	73
1500	56	96	86	62	60	100	86	65	63	109	93	77
2000	64	105	97	70	70	115	89	70	77	117	105	84
2500	70	105	101	75	75	129	95	75	84	131	115	90
For Silicone-Filled Units												
300	42	80	70	42	—	—	—	—	—	—	—	—
500	48	82	72	48	49	87	70	55	52	94	75	58
†† 750	50	86	80	55	51	93	75	61	54	100	85	68
1000	54	88	84	57	55	97	85	60	58	105	90	73
500	56	96	85	62	62	101	85	65	65	109	93	77
2000	64	105	97	70	70	115	98	70	77	120	103	84
2500	70	120	101	75	77	129	105	75	84	131	113	90

* H_c is the height from floor to cover.

† Maximum height from floor to centerline of throat.

†† Submersible

NOTE: Transformers with other insulating liquids may require different dimensions.

8.7.4 Finish

The finish shall be a dark color and shall be resistant to chipping and deterioration under normal underground operating conditions.

8.7.5 Ground pads (item 13, figure 2)

Tank-grounding provisions shall consist of a copper-faced-steel or stainless-steel pad with two holes horizontally spaced on 1-3/4 inch centers and drilled and tapped for 1/2-inch-13-UNC thread (see ANSI/ASME B1.1). The ground pad shall be welded to the tank. The minimum thickness of the copper facing shall be 0.015 inch. The minimum threaded depth of the holes shall be 1/2 inch. Thread protection for the ground pad shall be provided.

Copyright National Electrical Manufacturers Association
Provided by IHS under license with NEMA
No reproduction or networking permitted without license from IHS
Not for Resale

Part II: Transformers With Two-Position Grounding Switch

9 Ratings

9.1 Kilovolt-ampere ratings

Kilovolt-ampere ratings shall be as follows:

500	1500
750	2000
1000	2500

These ratings shall be based on not exceeding a 55°C average winding temperature rise above standard ambient as specified in ANSI/IEEE C57.12.00.

9.2 Voltage ratings and tap ratings

Preferred voltage ratings and taps shall be in accordance with table 4. When required, these high-voltage ratings may be specified without taps, or with four rated kilovolt-ampere, equally spaced taps. The total tap range shall not exceed 10%. The percent tap range shall be calculated as follows.

$$\text{Percent tap range} = \frac{(\text{max. tap voltage} - \text{minimum tap voltage}) \times 100}{\text{rated tap voltage}}$$

All taps shall be at rated kilovolt-amperes.

Table 4 – Preferred ratings for subway and vault-type secondary network transformers

Rating	BIL kV	Transformer High-Voltage		kVA Ratings for Taps for Low-Voltage Ratings of	
		Above	Below	216Y/125	480Y/277
13 750	95	None	13 573/13 406 13 234/13 063	500–1000	1000–2500
27 060	200	None	26 730/26 400 26 070/25 740	500–1000	1000–2500
		29 090/28 414 27 737	26 383	500–1000	1000–2500
33 312	200	None	32 906/32 500 32 094/31 688	500–1000	1000–2500

NOTES
1 Kilovolt-ampere ratings are 500, 750, 1000, 2000, and 2500.
2 Kilovolt-ampere ratings separated by a dash indicate that all intervening ratings are included.
3 All high-voltage windings are delta connected.
4 For 200 kV BIL ratings, the molded type apparatus bushing terminals may limit the test levels applied.

10 Basic lightning impulse insulation levels and dielectric test levels

10.1 Basic lightning impulse insulation levels (BIL) shall be in accordance with table 4.

NOTE—Cable terminations supplied by the user should provide suitable coordination with the transformer insulation level.

10.2 Dielectric test levels shall be in accordance with distribution transformer levels in ANSI/IEEE C57.12.00.

11 Percent impedance

11.1 Percent impedance

The percent impedance on the rated voltage connection shall be as follows.

Copyright National Electrical Manufacturers Association
Provided by IHS under license with NEMA
No reproduction or networking permitted without license from IHS
Not for Resale

kVA Rating	Percent Impedance
500 – 750	4.0
1000 – 2500	7.0

11.2 Tolerance on impedance

The tolerance shall be as specified in ANSI/IEEE C57.12.00.

11.3 Tolerance on impedance on a tap

The percent departure of the actual impedance at the rated voltage shall not be greater than the total tap voltage range expressed as a percent of the rated voltage.

12 Tests

12.1 General

Routine tests shall be made in accordance with ANSI/IEEE C57.12.00 and ANSI/IEEE C57.12.90.

12.2 Dielectric tests

The applied potential test and the induced potential test as specified in ANSI/IEEE C57.12.00 shall both be performed.

12.3 Reference temperature

The reference temperature to which load losses, impedance, regulation, and efficiency are corrected shall be 75°C.

13 Construction

13.1 Bushings and terminals

13.1.1 Bushings

13.1.1.1 Low-voltage bushings (item 10, figure 7) shall be welded to the tank. Vault-type transformers shall have the bushings located approximately as shown in figure 7 and dimensioned as shown in figure 8. Subway-type transformers shall have the bushings located approximately as shown in figure 6 and dimensioned as shown in figures 9 and 10. Bushings shall be externally replaceable.

13.1.1.2 On subway-type transformers, low-voltage bushings shall be mounted in a flanged throat (item 11, figure 6) suitable for connecting to a network protector. Bushings spacing, throat dimensions, and terminal details shall be as indicated in figures 9 and 10.

A gasket for use between the throat and the protector shall be furnished. Cap screws for attaching the protector to the throat are not covered by this standard.

13.1.1.3 LV throat shipping cover (item 12, figure 6)

A sealed sheet steel cover pan, fully flat gasketed, shall be installed over the LV throat to prevent mechanical and corrosive damage to the LV bushings, external connectors and throat flange during shipment and storage outdoors. The throat cover shall be bolted securely to the flange on the LV throat. The cover shall be completely enclosed to prevent entrance of air-borne chemicals or moisture that may corrode these external parts. The cover shall be painted.

Copyright National Electrical Manufacturers Association
Provided by IHS under license with NEMA
No reproduction or networking permitted without license from IHS
Not for Resale

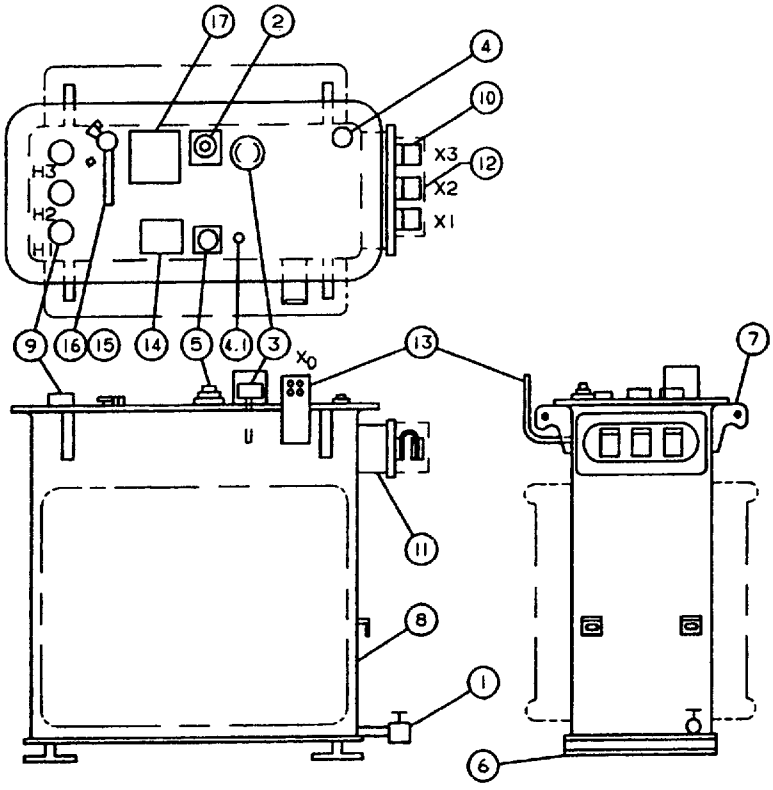

Item Reference	Section Reference	Description
1	13.3.4.1	Combination drain valve and bottom filler valve
2	13.3.2.1	Provision for liquid-level indication (see figure 12)
3	13.3.3	Dial-type thermometer without alarm contacts
4	13.3.4.2	Liquid filling and upper filter-press connection
4.1	13.3.4.3	Provision for pressure test
5	13.3.1	Tap changer
6	13.3.6	Transformer subbase
7	13.3.5.2	Lifting lugs
8	13.7	Tank
9	13.1.3	High-voltage cable entrance
10	13.1.1.1	Low-voltage bushings
11	13.1.1.2	Throat (see figures 3 and 4)
12	13.1.1.3	Shipping cover
13	13.1.2	Low-voltage neutral (see figure 11)
14	13.5	Nameplate location
15	13.2	High-voltage grounding switch
16	13.2.3.3	Operating handle
17	13.2.3.2.3	Handhole

Figure 6 – Location of accessories, subway type (two-position grounding switch)

Copyright National Electrical Manufacturers Association
Provided by IHS under license with NEMA
No reproduction or networking permitted without license from IHS
Not for Resale

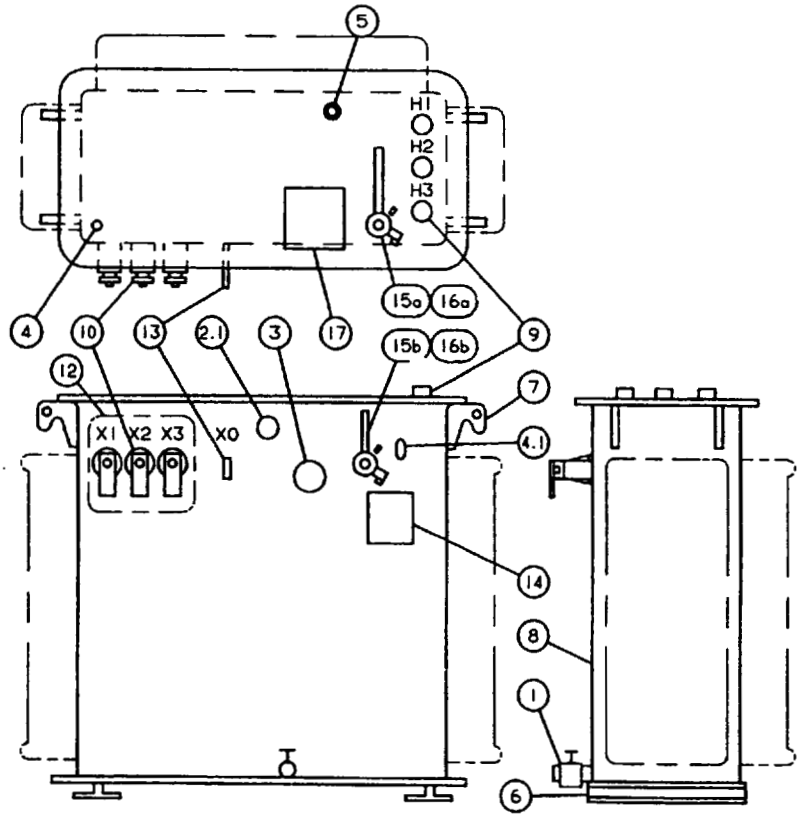

Item Reference	Section Reference	Description
1	13.3.4.1	Combination drain valve and filler valve
2.1	13.3.2.2	Liquid-level indicator
3	13.3.3	Dial-type thermometer without alarm contacts
4	13.3.4.2	Liquid filling and upper filter-press connection
4.1	13.3.4.3	Provision for pressure test
5	13.3.1	Tap changer
6	13.3.6	Transformer subbase
7	13.3.5.2	Lifting lugs
8	13.7	Tank
9	13.1.3	High-voltage cable entrance
10	13.1.1.1	Low-voltage bushings (see figure 8)
12	13.1.1.3	Shipping cover
13	13.1.2	Low-voltage neutral (see figure 11)
14	13.5	Nameplate location
15a	13.2	High-voltage grounding switch, 500 and 750 kVA
15b	13.2	High-voltage grounding switch, 1000 kVA and larger
16a	13.2.3.3	Operating handle, 500 and 750 kVA
16b	13.2.3.3	Operating handle, 1000 kVA and larger
17	13.2.3.2.3	Handhole

Figure 7 – Location of accessories, vault type (two-position grounding switch)

Copyright National Electrical Manufacturers Association
Provided by IHS under license with NEMA
No reproduction or networking permitted without license from IHS
Not for Resale

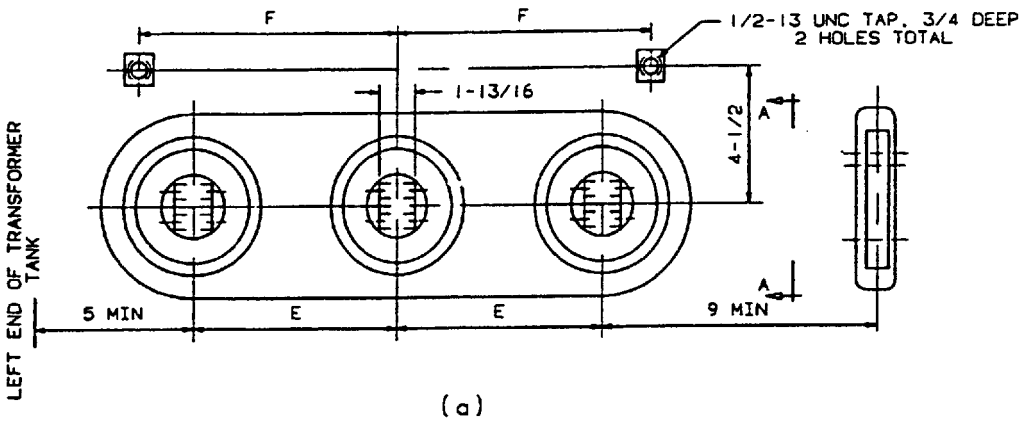

(a)
FRONT VIEW

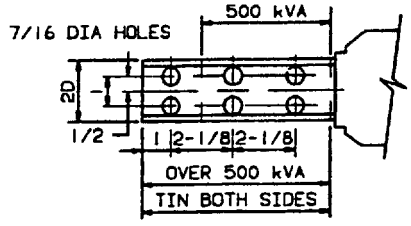

(b)
VIEW A-A

Transformer kVA	Low Voltage	Dimension	
		E	F
500	216Y/125	6	8-11/16
750 – 1000	216Y/125	11	14-1/2
1000 – 2500	480Y/277	11	14-1/2

NOTE— All dimensions are in inches.

Figure 8 – Low-voltage bushing arrangement vault type

Copyright National Electrical Manufacturers Association
Provided by IHS under license with NEMA
No reproduction or networking permitted without license from IHS
Not for Resale

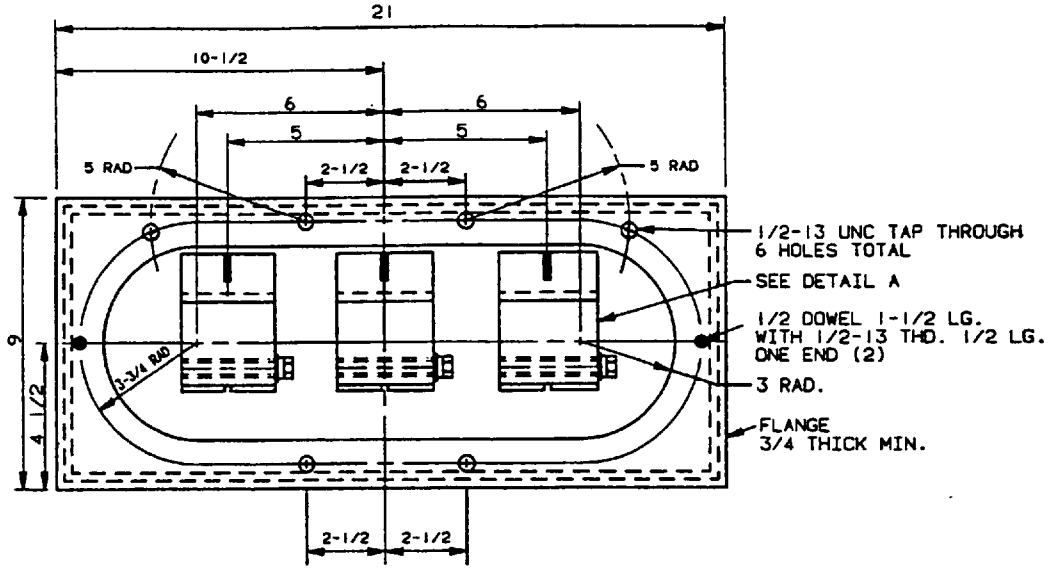

500KVA NETWORK TRANSFORMER THROAT
FOR MOUNTING NETWORK PROTECTOR

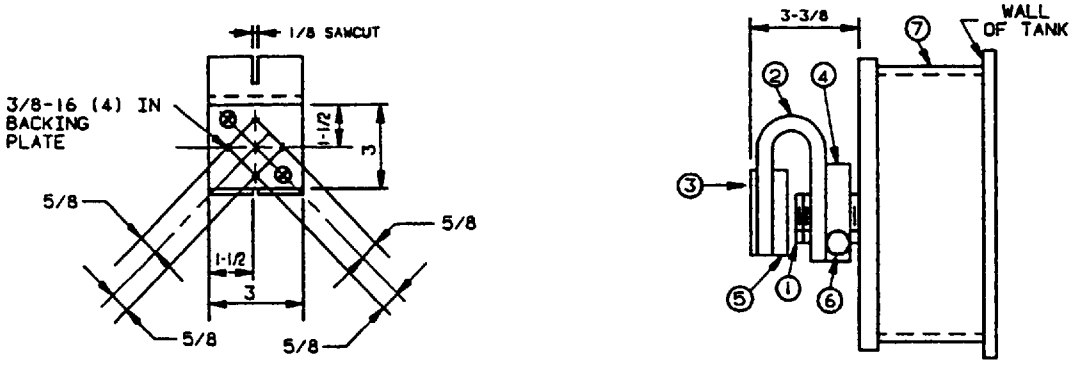

DETAIL - A

Item No.	Description
7	Transformer throat
6	Galvanized steel bolt fl. & lock washer
5	Steel backing plate 1/2 thk., & fl. hd. screws
4	clamping block
3	contact plate silver plated 0.001 thick
2	low voltage flexible terminal
1	stud 1/2 dia. 12 threads per inch

NOTES
1 Edge of throat flange to be free of paint and rust mask off with suitable masking material (peel off type.
2 Item #3 shall be smoothly rounded, flexible and protected from corrosion during shipping and storage.
3 All dimensions are in inches.

Figure 9 – Transformer throat for 500 kVA low voltage terminals on 5" centers

Copyright National Electrical Manufacturers Association
Provided by IHS under license with NEMA
No reproduction or networking permitted without license from IHS
Not for Resale

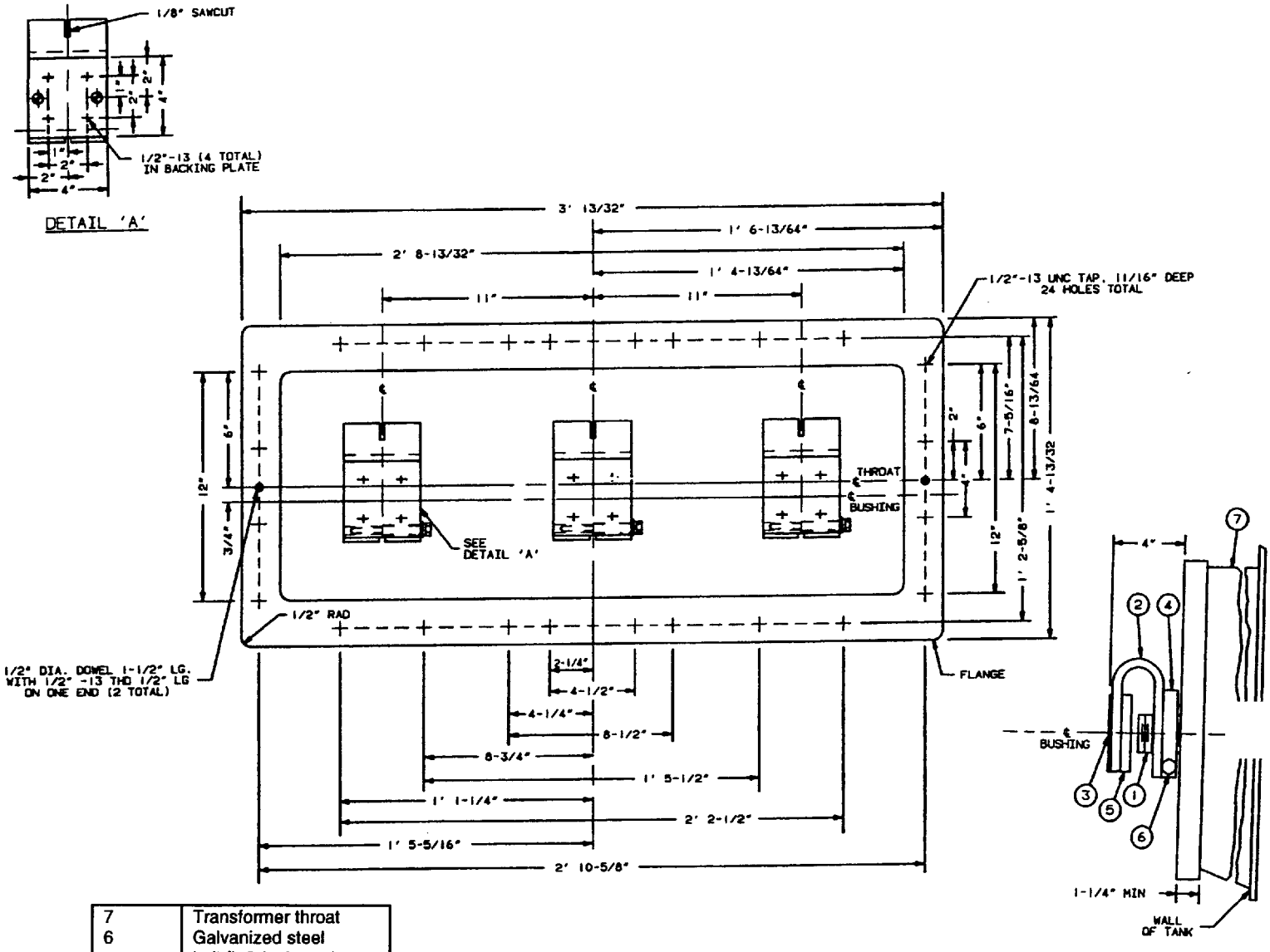

Item No.	Description
7	Transformer throat
6	Galvanized steel bolt fl. & lock washer
5	Steel backing plate 1/2 thk., & fl. hd. screws
4	clamping block
3	contact plate silver plated 0.001 thick
2	low voltage flexible terminal
1	stud 1/2 dia. 12 threads per inch

NOTES

1 Edge of throat flange to be free of paint and rust mask off with suitable masking material (peel off type.

2 Item #3 shall be smoothly rounded, flexible and protected from corrosion during shipping and storage.

3 This drawing to be used in conjunction with protectors rated 1120 kVA.

4 All dimensions are in inches.

Figure 10 – Transformer throat for 1000 kVA low voltage terminals on 11" centers

Copyright National Electrical Manufacturers Association
Provided by IHS under license with NEMA
No reproduction or networking permitted without license from IHS
Not for Resale

13.1.2 Low-voltage neutral termination (item 13, figures 6 and 7)

The neutral of the low-voltage winding shall be connected to a suitable boss brazed or welded to the inside of the tank wall. An external terminal shall be provided, solidly bonded to the tank wall approximately opposite the internal boss and provided with drillings for external connection, as shown in figure 11, and shall be located as shown in figures 6 and 7. The current rating of the neutral connection and terminal shall not be less than that of the low-voltage phase connection.

13.1.3 High-voltage cable entrance (item 9, figures 6 and 7)

Transformers with a high-voltage rating of 33 312 volts shall be provided with three entrances for single conductor, lead-covered cables in the main cover, as shown in figures 6 and 7. Insulating guide tubes shall be provided for each cable termination. An internal bayonet-type contact shall be provided at the lower end of each guide tube. A set of cable bayonets and connectors shall be furnished. Transformers with high-voltage ratings of 27 060 or 13 750 volts shall be provided with three molded-type high-voltage 600-ampere apparatus bushing terminals on the main cover, as shown in figures 6 and 7.

13.2 High-voltage grounding switch

13.2.1 Location

A three-pole grounding switch (item 15, figures 6 and 7) shall be located at the transformer tank.

13.2.2 Electrical characteristics of the switch

In the grounding position, the switch shall be capable of withstanding a short-circuit current of 15,000 amperes rms symmetrical for 5 seconds and 45,000 amperes rms symmetrical for 0.2 second without damage.

13.2.3 Mechanical features of the switch

13.2.3.1 Switch positions

The switch shall be provided with two operating positions: clear and ground. These positions shall be indicated by suitable markings located near the external operating handle.

13.2.3.2 Electrical interlock

An electrical interlock shall prevent movement of the switch from the clear position when the transformer is energized.

13.2.3.2.1 Operating values

The interlock shall pick up and drop out at the following voltages:

Coil Voltage	Maximum Pick-Up Voltage	Minimum Drop-Out Voltages	Maximum Excitation Voltages
125	90	15	145
277	200	33	320

Copyright National Electrical Manufacturers Association
Provided by IHS under license with NEMA
No reproduction or networking permitted without license from IHS
Not for Resale

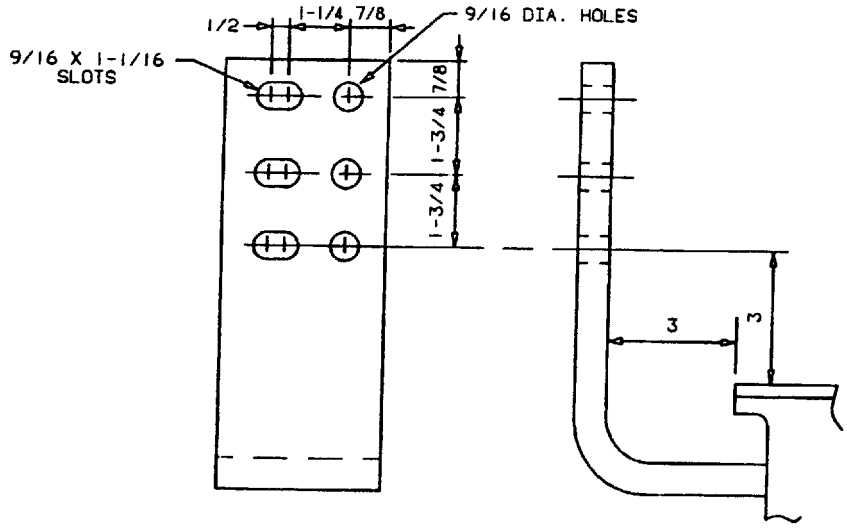

(a)
SUBWAY TYPE

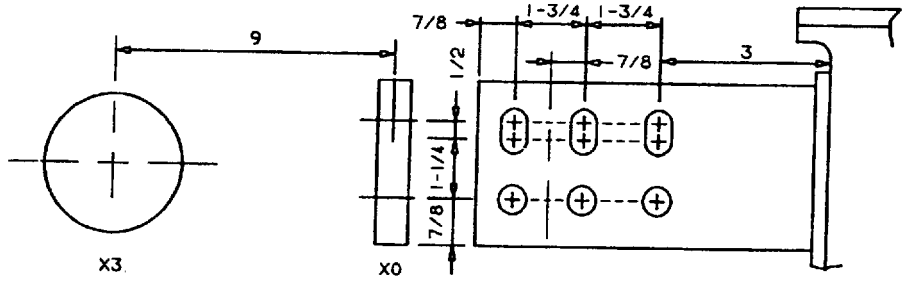

(b)
VAULT TYPE

Low-Voltage 216Y/125		Low-Voltage 480Y/277	
kVA	Number of Holes	kVA	Number of Holes
500	4	1000	4
750	4	1500	4
1000	6	2000	6
		2500	6

NOTE—All dimensions are in inches.

Figure 11 – Low-voltage neutral

Copyright National Electrical Manufacturers Association
Provided by IHS under license with NEMA
No reproduction or networking permitted without license from IHS
Not for Resale

13.2.3.2.2 Interlock assembly

The interlock assembly shall be such that, with the locking lug or latch mechanism blocked and the coil energized at the voltage indicated, the functional performance of the coil will not be impaired.

13.2.3.2.3 Interlock coil replacement

A handhole (item 17, figures 6 and 7) shall be provided in the main cover, with adequate opening for removal and replacement of the electrical interlock coil. The handhole cover shall be welded to the main cover.

13.2.3.3 Operating handle (item 16, figures 6 and 7)

The grounding switch shall extend through the main cover on subway-type transformers of all ratings and vault-type transformers rated 500 and 750 kVA, and through the wall on vault-type transformers 1000 kVA and larger, in accordance with figure 6 and figure 7. Provision shall be made for padlocking the handle in either of these positions. The switch assembly shall be designed so that the force of gravity cannot move the switch blades from either position when the handle is not padlocked.

13.3 Accessory equipment

Accessory equipment is that equipment which shall be provided as part of the transformer. The approximate location of such equipment is shown in figures 6 and 7.

13.3.1 Tap changer (item 5, figures 6 and 7)

A tap changer for de-energized operation shall be provided. Each tap changer position and the associated tap voltage shall be clearly identifiable by reference to nameplate information. All positions of the tap changer shall be operative positions. The tap changer shall be of sealed construction such that the integrity of the main tank seal is not compromised at any time. The tap changer shall be designed with an external operating means available under a protective cap on top of the main tank. An indicator shall clearly show the tap position when the cap is removed.

13.3.2 Liquid-level indicator

13.3.2.1 Subway-type transformers (item 2, figure 6)

On subway-type transformers, provision for magnetic liquid-level indication shall be as shown in figure 12 and shall be located as shown in figure 6.

13.3.2.2 Vault-type transformers (item 2.1, figure 7)

On vault-type transformers, a welded-on nongasketed-type magnetic liquid-level indicator shall be located as shown in figure 7. The diameter of the dial (inside bezel) shall be 3-1/4 inches ±1/4 inch. The gage shall have a dark dial face with light markings and a light indicating hand. The dial markings shall show the maximum 85°C, 50°C, 25°C, 10°C, and minimum levels.

13.3.3 Dial-type thermometer without alarm contacts (item 3, figures 6 and 7)

On vault-type transformers, the thermometer shall be located as shown in figure 7. On subway-type transformers, the thermometer shall be located as shown in figure 6. The diameter on the dial (inside bezel) shall be 4-1/2 inches ±1 inch. The thermometer shall be the direct-stem type, mounted in a closed well at a suitable level to indicate the top liquid temperature. The thermometer shall have a dark dial face with light markings, a light-colored indicating hand, and an orange-red maximum indicating hand, with provision for resetting. The dial markings shall cover the range from 0°C to 160°C. The words "liquid temperature" shall be on the dial or on a suitable nameplate mounted adjacent to the indicator.

Copyright National Electrical Manufacturers Association
Provided by IHS under license with NEMA
No reproduction or networking permitted without license from IHS
Not for Resale

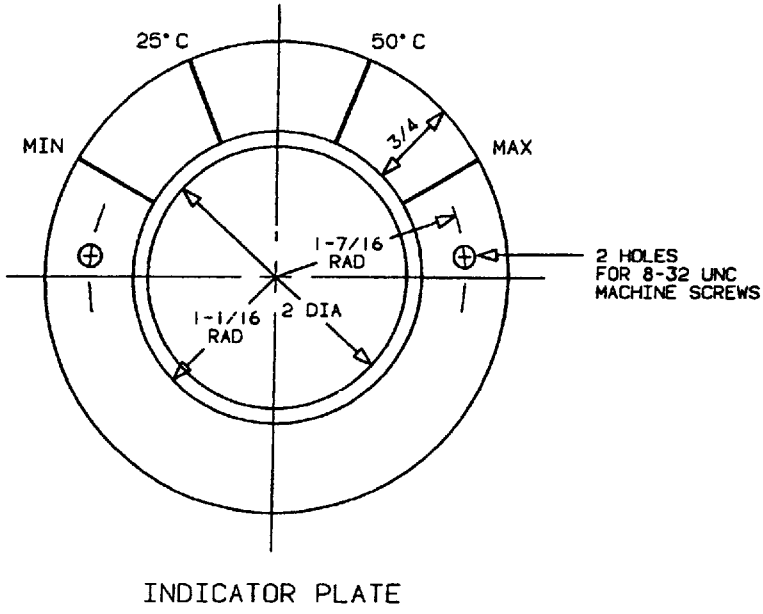

INDICATOR PLATE

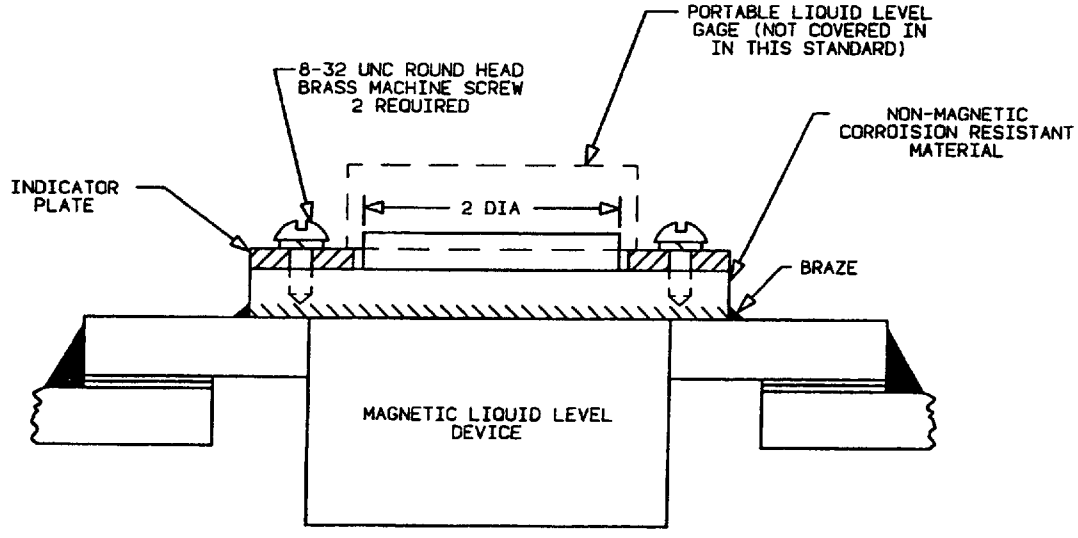

Figure 12 – Provision for magnetic liquid-level indicator, subway type

Copyright National Electrical Manufacturers Association
Provided by IHS under license with NEMA
No reproduction or networking permitted without license from IHS
Not for Resale

13.3.4 Valves, sampling devices, and filter press connections

13.3.4.1 Combination drain and bottom filter valve (item 1, figures 6 and 7)

The valve shall be of the globe type and shall be suitable for use with the insulating fluid of the transformer. The drain valve shall be 1-inch in size and shall have 1-inch NPT threads and a pipe plug in the outer end.

13.3.4.2 Liquid filling and upper filter press connection (item 4, figures 6 and 7)

The liquid filling and upper filter press connection shall consist of a 1-inch NPT opening with a plug in the cover.

13.3.4.3 Provision for pressure test (item 4.1, figures 6 and 7)

On subway-type transformers, provision for pressure test shall consist of a 1/2-inch NPT opening with a 1/2-inch NPT liquid-sampling fitting, located in the cover as shown in figure 6. On vault-type transformers, the same provision shall be located on the front wall as shown in figure 7.

13.3.4.4 Material and installation

All valves, fittings, pipe plugs, and bushings shall be of corrosion-resistant material and shall be installed with nonconducting thread sealer.

13.3.5 Lifting, moving and jacking provisions

13.3.5.1 Safety factor

Lifting provisions shall be designed to provide a safety factor of 5. This safety factor is the ratio of the ultimate stress of the material used to the working stress. The working stress is the maximum combined stress developed in the lifting provisions by the static load of the completely assembled transformer.

13.3.5.2 Lifting lugs (item 7, figures 6 and 7)

Four lifting lugs shall be arranged to facilitate lifting the transformer with or without the network protector attached. The lugs shall be provided with a suitable hole for attaching a 1-inch clevis.

13.3.6 Transformer subbase (item 6, figures 6 and 7)

The transformer subbase shall consist of bars parallel to the short axis of the transformer. The subbase shall provide a 1-1/2-inch minimum clearance from the floor to the tank bottom, with corners left clear for jacking.

13.4 Angular displacement and terminal markings

13.4.1 Angular displacement

The angular displacement between high-voltage and low-voltage terminal voltages shall be in accordance with figure 13.

13.4.2 Terminal markings

External high-voltage and low-voltage terminal markings shall be in accordance with figure 13.

Copyright National Electrical Manufacturers Association
Provided by IHS under license with NEMA
No reproduction or networking permitted without license from IHS
Not for Resale

Figure 13 – Angular displacement and terminal markings (two-position grounding switch)

Copyright National Electrical Manufacturers Association
Provided by IHS under license with NEMA
No reproduction or networking permitted without license from IHS

Not for Resale

13.5 Nameplate (item 14, figures 6 and 7)

The nameplate shall conform to the requirements of nameplate as described in ANSI/IEEE C57.12.00, modified to include the following:

a) type (subway or vault)
b) the words "Network Transformer"
c) approximate gallons of liquid in transformer
d) interlock coils and connections
e) type of high-voltage switch

13.6 Connection of transformer for shipment by the manufacturer

The transformer shall be shipped connected for the rated high voltage.

13.7 Tank (item 8, figures 6 and 7)

The transformer tank shall be of sealed construction, consisting of a welded main cover, welded handhole cover, and welded or brazed high-voltage wiping sleeves of brass, bronze, or copper. The tank shall be of sufficient strength to withstand a pressure of 7 psig without permanent deformation.

The completely assembled transformer shall be designed to withstand, without permanent deformation, a pressure resulting from operation at rated kilovolt-amperes and ambient temperature as specified in 3.1, which pressure shall not exceed 7 psig. The completely assembled transformer shall be tested for leaks at a minimum of 7 psig above the static head of liquid for no fewer than 6 hours. Alternative methods for leak detection may be specified.

13.7.1 Dimensions

Dimensions, including the low-voltage flexible connectors, (without the network protector attached), shall not exceed those shown in table 5. These dimensions are intended to guide the user in planning vaults capable of accommodating all current designs of the network transformers covered by this standard.

Table 5 – Maximum tank dimensions (inches)

Mineral Oil-Filled Units												
kVA Rating	13 750 Volts and Below				27 060 Volts				33 312 Volts			
	W	L	H_c*	Throat H ±0.5" †	W	L	H_c*	Throat H ±0.5" †	W	L	H_c*	Throat H ±0.5" †
+ 500	42	70	55	46.5	44	70	61	48.5	44	70	61	46.5
500	39	76	60	—	42	79	66	—	42	79	66	—
+1000	49	76	79	67	49	76	79	66.5	49	76	79	66.5
1000	45	80	83	—	47	84	89	—	47	84	89	—
2000	60	100	98	—	66	102	102	—	66	100	102	—
+2000	60	100	102	—	66	102	102	—	66	102	102	—
2500	62	105	102	—	66	102	102	—	66	102	102	—
For Silicone-Filled Units												
300	39	56	61	—	—	—	—	—	—	—	—	—
500	39	76	60	—	42	79	66	—	42	79	66	—
+ 500	—	—	—	—	44	70	61	48.5	—	—	—	—
1000	45	80	83	—	47	84	89	—	47	84	89	—
+1000	—	—	—	—	49	76	79	66.5	—	—	—	—
2500	62	120	102	—	66	102	102	—	66	102	102	—

* H_c is the height from floor to cover

† Maximum height from floor to centerline of throat

\+ Submersible

NOTE—Transformers with other insulating liquids may require different dimensions.

Copyright National Electrical Manufacturers Association
Provided by IHS under license with NEMA
No reproduction or networking permitted without license from IHS
Not for Resale

13.7.2 Corrosion resistance

Tank components shall provide corrosion resistance equivalent to not less than the following thickness of copper-bearing steel (minimum copper content, 0.20%):

Tank wall	5/16 inch
Auxiliary coolers	5/16 inch
Cover	1/2 inch
Tank bottom	1/2 inch

13.7.3 Finish

The finish shall be a dark color and shall be resistant to chipping and deterioration under normal underground operating conditions.

14 Audible sound levels

Transformers shall be designed so that the average sound level does not exceed the values given in table 6, when measured according to ANSI/IEEE C57.12.90.

Table 6 – Audible sound levels (two-position grounding switch)

Equivalent Two Winding kVA* 200 kV BIL and Below	Average Sound Level (decibels) dB(A)
500	56
750	57
1000	58
1500	60
2000	61
2500	62

*Class OA ratings

Copyright National Electrical Manufacturers Association
Provided by IHS under license with NEMA
No reproduction or networking permitted without license from IHS
Not for Resale