Setting Standards for Excellence

To: Holders of ANSI C57.12.29-1999
From: NEMA Communications Department
Date: January 18, 2000
Subject: Errata

Attached is an errata for the recently published ANSI C57.12.29-1999. The Communications Dept. was provided incorrect figures for this standard. Please note that the correct figures are those that are included in the errata.

We apologize for any inconvenience this may have caused.

Copyright National Electrical Manufacturers Association
Provided by IHS under license with NEMA
No reproduction or networking permitted without license from IHS
Not for Resale

ANSI C57.12.29-1999 *Errata*
Replacement Figures

AMERICAN NATIONAL STANDARD

Pad-Mounted Equipment—
Enclosure Integrity for Coastal Environments

Errata

Secretariat

National Electrical Manufacturers Association

Approved July 1, 1999

American National Standards Institute, Inc.

These six figures (illustrations) of test panels required to conduct testing specified in the standard. Please disregard the figures included within the standard.

Copyright National Electrical Manufacturers Association
Provided by IHS under license with NEMA
No reproduction or networking permitted without license from IHS
Not for Resale

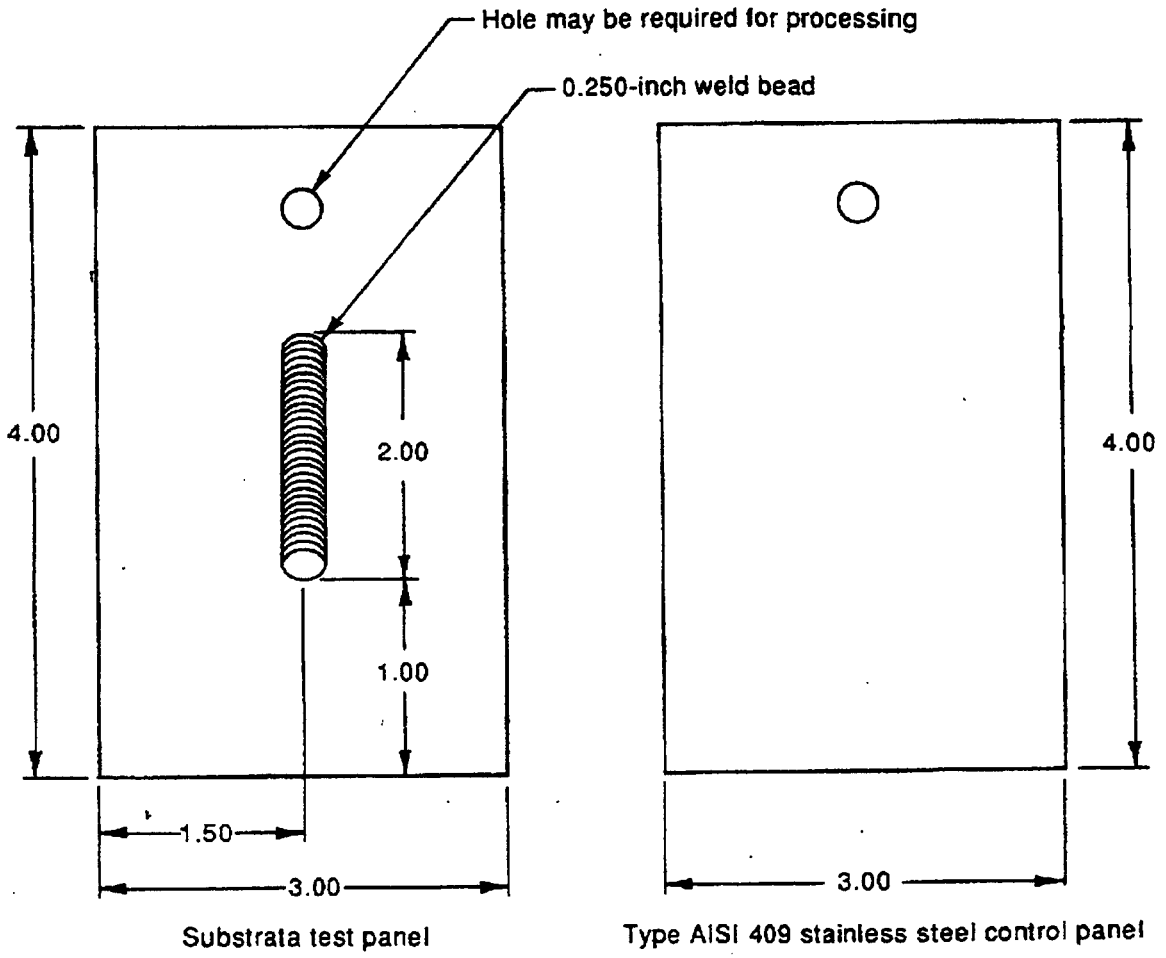

Figure 1

Figure 2

NOTES:

1. **Panel thickness to be of typical production stock used in the manufacture of devices for which test is intended.**
2. **Weld bead to be the type metal composition as used in production.**
3. **Both panels are to be cleaned and uncoated.**

Figures 1 and 2

Copyright National Electrical Manufacturers Association
Provided by IHS under license with NEMA
No reproduction or networking permitted without license from IHS
Not for Resale

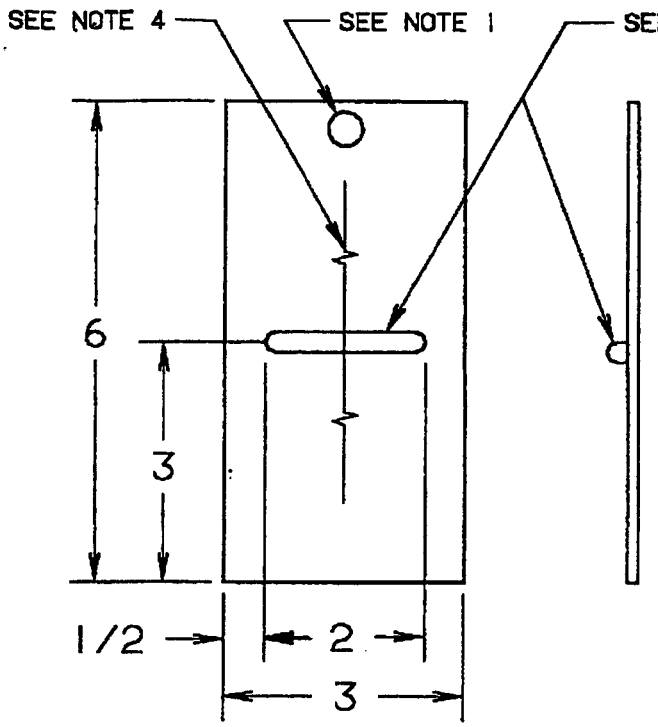

Figure 3

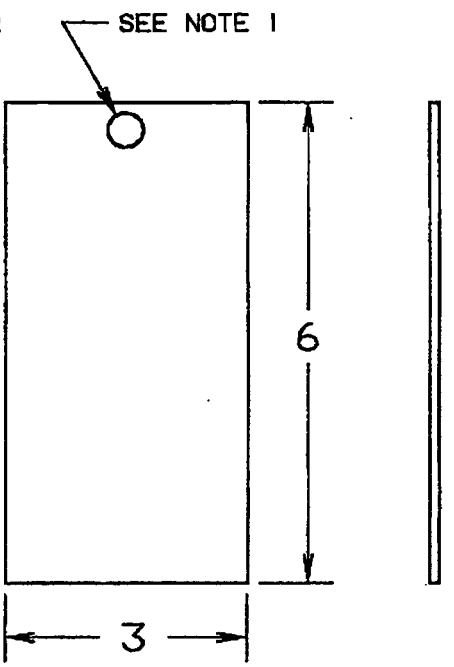

Figure 4

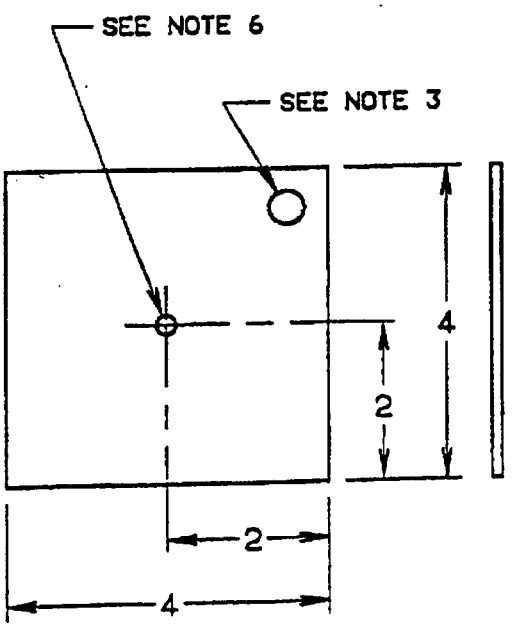

Figure 5

1. Hole can be placed in panel for hanging for paint operations if required. Locate centered on short dimension and 1/8" to edge of hole on long dimension. Recommended maximum hole size 9/16" diameter.
2. Weld bead to be the same metal composition as used in production.
3. Hole can be placed in panel for hanging. To be located in one corner. Recommended maximum hole size 9/16".
4. Scribe per ASTM D1654 across weld approximately 4" scribe length.
5. Panel thickness to be of typical production stock used in the manufacture of devices test is intended for.
6. 1/4" diameter hole may require reaming to fit Taber abrader post.

Figure 3, 4, and 5

Copyright National Electrical Manufacturers Association
Provided by IHS under license with NEMA
No reproduction or networking permitted without license from IHS
Not for Resale

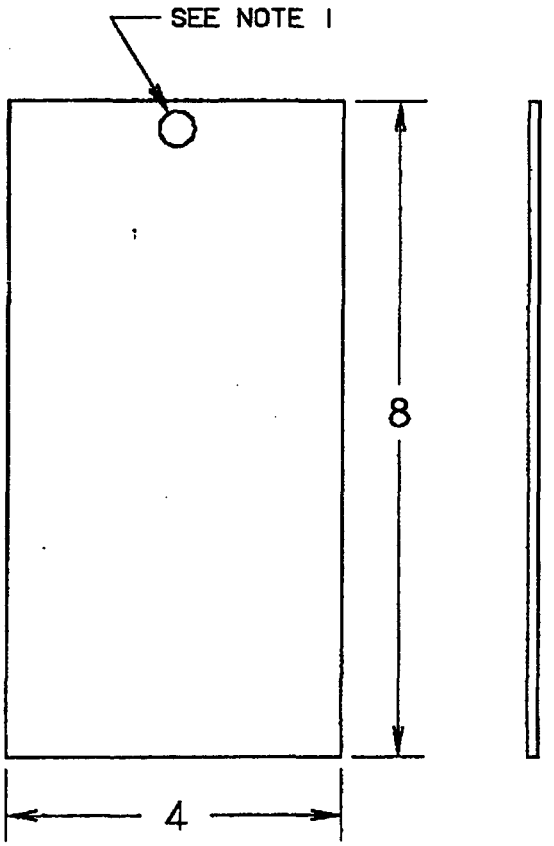

Figure 6

Notes:

1. **Hole can be placed in panel for hanging for paint operations if required Locate centered on short dimension and 1/8" to edge of hole on long dimension. Recommended maximum hole size is 9/16" diameter**

2. **Panel thickness to be of typical production stock used in the manufacture of devices for which test is intended.**

Figure 6

Copyright National Electrical Manufacturers Association
Provided by IHS under license with NEMA
No reproduction or networking permitted without license from IHS
Not for Resale

AMERICAN NATIONAL STANDARD



ANSI C57.12.29

American National Standard

Pad-Mounted Equipment— Enclosure Integrity for Coastal Environments

Copyright National Electrical Manufacturers Association
Provided by IHS under license with NEMA
No reproduction or networking permitted without license from IHS
Not for Resale

NATIONAL ELECTRICAL MANUFACTURERS ASSOCIATION
1300 NORTH 17TH STREET, SUITE 1847, ROSSLYN, VA 22209
(703) 841-3200 FAX: (703) 841-3300

AMERICAN NATIONAL STANDARD

Pad-Mounted Equipment— Enclosure Integrity for Coastal Environments

Secretariat

National Electrical Manufacturers Association

Approved July 1, 1999

American National Standards Institute, Inc.

Copyright National Electrical Manufacturers Association
Provided by IHS under license with NEMA
No reproduction or networking permitted without license from IHS

Not for Resale

American National Standard

Approval of an American National Standard requires verification by ANSI that the requirements for due process, consensus, and other criteria for approval have been met by the standards developer.

Consensus is established when, in the judgment of the ANSI Board of Standards Review, substantial agreement has been reached by directly and materially affected interests. Substantial agreement means much more than a simple majority, but not necessarily unanimity. Consensus requires that all views and objections be considered, and that a concerted effort be made toward their resolution.

The use of American National Standards is completely voluntary; their existence does not in any respect preclude anyone, whether he has approved the standards or not, from manufacturing, marketing, purchasing, or using products, processes, or procedures not conforming to the standards.

The American National Standards Institute does not develop standards and will in no circumstances give an interpretation of any American National Standard. Moreover, no person shall have the right or authority to issue an interpretation of an American National Standard in the name of the American National Standards Institute. Requests for interpretations shall be addressed to the secretariat or sponsor whose name appears on the title page of this standard.

CAUTION NOTICE: This American National Standard may be revised or withdrawn at any time. The procedures of the American National Standards Institute require that action be taken to reaffirm, revise, or withdraw this standard no later than five years from the date of approval. Purchasers of American National Standards may receive current information on all standards by calling or writing the American National Standards Institute.

Published by

National Electrical Manufacturers Association
1300 N. 17th Street, Rosslyn, Virginia 22209

Copyright © 1999 National Electrical Manufacturers Association
All rights reserved.

No part of this publication may be reproduced in any form, in an electronic retrieval system or otherwise, without prior written permission of the publisher.

Printed in the United States of America

Copyright National Electrical Manufacturers Association
Provided by IHS under license with NEMA
No reproduction or networking permitted without license from IHS

Not for Resale

CONTENTS

Page

Foreword iii
1 Scope and purpose 1
1.1 Scope 1
1.2 Purpose 1

2 Referenced and related standards 1
2.1 Referenced standards 1
2.1.1 ASTM standards 1
2.1.2 Society of Automotive Engineers standards 2
2.1.3 Related American National standards (ANSI) 2

3 Definitions 2
3.1 Routine tests 2
3.2 Design tests 2
3.3 Conformance tests 3
3.4 Pad-mounted enclosure 3
3.5 Dry film thickness 3
3.6 Pad lock 3
3.7 Enclosure security 3
3.8 Axial force 3
3.9 Prying leverage 3
3.10 Coastal environment 3
3.11 Substrate 3
3.12 Gel coat 3
3.13 Above grade 3

4 Enclosure security 4

5 Enclosure design and coating system requirements 4
5.1 Enclosure design requirements objective 4
5.1.1 Accessibility 4
5.1.2 Contaminate accumulation 4
5.1.3 Welds–surface preparation 4
5.2 Substrate requirements 4
5.2.1 General 4
5.2.2 Specification of substrate characteristics 4
5.2.3 Substrate performance requirements 4
5.3 Coating substrate requirements 6
5.3.1 General 6
5.3.2 Specification of coating characteristics 6
5.3.3 Enclosure color 6
5.4 Coating system test specimens 6
5.5 Coating system performance requirements 6
5.5.1 Exposure test 6
5.5.2 Cross hatch adhesion test 10
5.5.3 Humidity test 10
5.5.4 Insulating fluid resistance test (for liquid filled units only) 10
5.5.5 Ultraviolet accelerated weathering test 10
5.5.6 Abrasion resistance tabor abrader 10
5.5.7 Gravelometer test 12

6 Labels 12
6.1 Purpose 12
6.2 Application 12

Copyright National Electrical Manufacturers Association
Provided by IHS under license with NEMA
No reproduction or networking permitted without license from IHS
Not for Resale

7 General 12
7.1 Shipment 12
7.2 Coating repair procedure 12

Test procedure A 13

Copyright National Electrical Manufacturers Association
Provided by IHS under license with NEMA
No reproduction or networking permitted without license from IHS
Not for Resale

Foreword (This Foreword is not part of American National Standard C57.12.29-1999.)

The Accredited Standards Committee on Transformers, Regulators, and Reactors, C57, has for a number of years been developing and correlating standards on transformers and regulators. The data used in this work have been gathered from many sources, including the standards of the Institute of Electrical and Electronics Engineers and the National Electrical Manufacturers Association, reports of committees of the Edison Electric Institute, and others.

This standard and the related standards on three- and single-phase distribution transformers were prepared by the Joint C57/C37 Working Group on Enclosures.

Suggestions for improvement of this standard will be welcome. They should be sent to the National Electrical Manufacturers Association, 1300 N. 17th Street, Rosslyn, Virginia 22209.

This standard was processed and approved for submittal to ANSI by Accredited Standards Committee on Transformers, Regulators, and Reactors, C57, and Accredited Standards Committee, C37, Switchgear. Approval of the standard does not necessarily imply that all committee members voted for its approval.

At the time of approval, the working group members were as follows:

Joseph Martin, Chair

R. Olen	T. Diamantis	R. Stahara
K. Hanus	D. Elzey	T. Kaley
J. Malloy	R. Scheu	J. Carulli
A. Worland		

Accredited Standards Committee on Transformers, Regulators, and Rectors, C57:

John D. Borst, IEEE Delegation, Chairman
D. Rollings, NEMA Delegation, Vice Chairman
John A. Gauthier, NEMA, Secretary

Organization	*Committee Member*
U.S. Dept. of Energy, Western Area Power Admin.	K. C. Wolohon
Dept. of the Navy, Civil Engineer Corps.	C. M. Mandeville
Dept. of the Interior, Bureau of Reclamation	D. J. Mulligan
Department of Agriculture, R.E.A.	M. Eskandry
Tennessee Valley Authority	F. Lewis
Underwriters Laboratories, Inc.	M. Schacker

Copyright National Electrical Manufacturers Association
Provided by IHS under license with NEMA
No reproduction or networking permitted without license from IHS
Not for Resale

Electric Light & Power Company (EL&P)	P. E. Orehek, Chairman of Delegation
	T. Diamantis
	G. Anderson
	G. Miller (Alternate)
	K. S. Hanus
	J. Sullivan
	C. G. Nieman
Institute of Electrical and Electronics Engineers (IEEE)	W. Binder, Chairman of Delegation
	J. D. Borst
	J. Matthews
	B. Patel
	H. Jin Sim (Alternate)
	T. Prevost
National Electrical Manufacturers Association (NEMA)	D. Rollings, Chairman of Delegation
	G. D. Coulter
	P. J. Hopkinson
	R. Plaster
	Harral Robin
	H. Jin Sim (Alternate)

Accredited Standards Committee for Switchgear, C37:

E. Byron, Chairman
A. K. McCabe, Executive Vice-Chairman, HV Standards
J. C. Scott, Executive Vice-Chairman, LV Standards
D. L. Swindler, Executive Vice-Chairman, IEC Activities
M. Calwise, Secretary

Organization	*Committee Member*
Association of Iron and Steel Engineers	Vacant
Electric Light and Power Group	D. J. Borchart
	T. E. Bruck (Alternate)
	D. E. Galicia
	J. L. Koepfinger
	J. H. Provanzana
Institute of Electrical and Electronics Engineers	D. F. Peelo (Chairman)
	L. B. Beard
	P. W. Dwyer
	A. Monroe
	D. Sigmon
	S. C. Atkinson (Alternate)
	D. G. Kumbera (Alternate)
	L. V. McCall (Alternate)

Copyright National Electrical Manufacturers Association
Provided by IHS under license with NEMA
No reproduction or networking permitted without license from IHS
Not for Resale

National Electrical Manufacturers Association	R. Garzon (Chairman) W. Kracht H. L. Miller T. Olsen S. Stone E. Byron (Alternate) G. T. Jones (Alternate) G. Sakats (Alternate) D. L. Swindler (Alternate)
Testing Laboratory Group	L. Frier, MET Electrical Testing Association P. Notarian, Underwriters Laboratories, Inc.
Tennessee Valley Authority	D. N. Reynolds
U.S. Dept. of the Army–Office of the Chief of Engineers	J. A. Gilson
U.S. Dept. of the Navy–Naval Construction Battalion Center	R. R. Nicholas
Western Area Power Administration	G. D. Birney

Copyright National Electrical Manufacturers Association
Provided by IHS under license with NEMA
No reproduction or networking permitted without license from IHS
Not for Resale

Pad-mounted equipment—enclosure integrity for coastal environments

1 Scope and purpose

1.1 Scope

This standard covers conformance tests and requirements for the integrity of above grade pad-mounted enclosures intended for installation in coastal environments containing apparatus energized in excess of 600 volts that may be exposed to the public including, but not limited to, the following types of equipment enclosures:

a) Pad-mounted capacitors or inductors
b) Pad-mounted distribution transformers
c) Pad-mounted junction enclosures
d) Pad-mounted metering equipment
e) Pad-mounted switch gear

This standard does not cover installations that are under the exclusive control of electric utilities and that are located in such a manner that access to the equipment is controlled exclusively by the utility.

1.2 Purpose

The purpose of this standard is to describe the requirements for a comprehensive integrity system for pad-mounted enclosures providing long field life with minimum maintenance and positive safety features.

2 Referenced and related standards

2.1 Referenced standards

This standard is intended to be used with the following standards.

2.1.1 ASTM standards

(Copies are available from ASTM 100 Bar Harbor Drive, West Conshohocken, PA 19426.)

ASTM B117-95, *Standard Method of Salt Spray (Fog) Testing*

ASTM D523-94, *Standard Test Method for Specular Gloss*

ASTM D714-94, *Method of Evaluating Degree of Blistering of Paints*

ASTM D1654-92, *Method for Evaluation of Painted or Coated Specimens Subjected to Corrosive Environments*

ASTM D3170-91, *Test Method for Chip Resistance of Coatings*

ASTM D3359-95, *Standard Methods for Measuring Adhesion by Tape Test*

ASTM D3363-92, *Test Method for Film Harness by Pencil Test*

ASTM D4060-95, *Standard Test Method for Abrasion Resistance of Organic Coatings by the Tabor Abrader*

Copyright National Electrical Manufacturers Association
Provided by IHS under license with NEMA
No reproduction or networking permitted without license from IHS
Not for Resale

ASTM D4585-92, *Standard Practice for Testing Water Resistance of Coatings Using Controlled Condensation*

ASTM G53-95, *Standard Recommended Practice for Operating Light and Water Exposure Apparatus (Fluorescent UV-Condensation Type) for Exposure of Nonmetallic Materials*

2.1.2 Society of Automotive Engineers standards

(Copies available from the Society of Automotive Engineers, 400 Commonwealth Blvd, Warrendale, PA 15906.)

SAE J400, *Test for Chip Resistance of Surface Coatings*

2.1.3 Related American National standards (ANSI)

The following standards are listed here for information only and are not essential for the completion of the requirements of this standard.

ANSI C2-97, *National Electrical Safety Code*

ANSI C57.12.10 through C57.12.39, *ANSI Standards for Distribution Transformers*

ANSI/IEEE C42.100, *Standard Dictionary of Electrical Electronics Terminology*

3 Definitions

3.1 Routine tests

Tests are made for quality control by the manufacturer on every device or representative samples, or on parts or materials, as required to verify during production that the product meets the design specifications and applicable standards.

NOTES

1 Certain quality assurance tests on identified critical parts of repetitive high-production devices may be tested on a planned statistical sampling basis.
2 "Routine Tests" are sometimes called "Production Tests."

3.2 Design tests

Tests made by the manufacturer to determine the adequacy of the design of a particular type or model of equipment, or its component parts, to meet its assigned ratings, and to operate satisfactorily under normal conditions and under special conditions if specified. These tests may be used to demonstrate compliance with applicable standards of the industry.

NOTE—Design tests, sometimes called type tests, are made on representative apparatus or prototypes to verify the validity of design analysis and calculation methods and to substantiate the ratings assigned to all other apparatus of basically the same design. These tests may also be used to evaluate the modification of a previous design and to ensure that performance has not been adversely affected. Test data from previous similar designs may be used for current designs, where appropriate. Once made, the tests need not be repeated unless the design is changed so as to modify performance.

Copyright National Electrical Manufacturers Association
Provided by IHS under license with NEMA
No reproduction or networking permitted without license from IHS
Not for Resale

3.3 Conformance tests

Certain performance tests are conducted to demonstrate compliance with the applicable standards. The test specimen is normally subjected to all planned routine tests prior to initiation of the conformance test program.

NOTE—The conformance tests may, or may not, be similar to certain design tests. Demonstration of margins (capabilities) beyond the standard requirements is unnecessary.

3.4 Pad-mounted enclosure

An enclosure containing electrical apparatus, typically located outdoors at ground level where the general public has direct contact with the exterior surfaces of the equipment. The general construction of this equipment shall be such that authorized personnel may obtain access to the apparatus inside the equipment compartment(s).

3.5 Dry film thickness

Thickness of any applied coating(s) measured after curing.

3.6 Pad lock

A locking device specified by the user that will prevent the disengagement of the penta head device (e.g., key or combination lock, one time or twist lock, single-use lock, or similar device.)

3.7 Enclosure security

The completely assembled apparatus will resist unauthorized entry when tested in accordance with the procedures of this standard.

3.8 Axial force

A force applied along the axis of the pry bar from its handle to its pry tip.

3.9 Prying leverage

A force at right angles to the handle times the distance from this force to the point of insertion of the pry tip into a joint, crevice, or similar opening in enclosure.

3.10 Coastal environment

The land area within 762 meters (2500 feet) of the mean high water line.

3.11 Substrate

The material that provides structural integrity to the enclosure.

3.12 Gel coat

The material that provides the inhibition for ultraviolet protection and color to the fiber reinforced plastic (FRP).

3.13 Above grade

A term referring to an equipment use location above the high water line not intended for partial or total submersion.

Copyright National Electrical Manufacturers Association
Provided by IHS under license with NEMA
No reproduction or networking permitted without license from IHS
Not for Resale

4 Enclosure security

(Refer to clause 4 of ANSI C57.12.28-1999.)

This clause is intended to comply with clause 4 of ANSI C57.12.28-1999 in its entirety, including text, tables, and figures.

5 Enclosure design and coating system requirements

5.1 Enclosure design requirements objective

The objective of this section is to describe the design and performance requirements for pad-mounted enclosures for coastal environments. Other performance requirements may be needed to provide long field life in other environments.

5.1.1 Accessibility

The enclosure shall be designed such that all exterior surfaces are accessible for proper surface preparation and the application of a uniform amount of the coating materials. Additionally, all exterior surfaces of the enclosure are to be accessible for the purposes of inspection and maintenance of the enclosure over the life of the equipment.

5.1.2 Contaminate accumulation

The enclosure shall be designed to shed water and minimize areas where corrosive elements can accumulate.

5.1.3 Welds—surface preparation

All welds shall be treated to prepare the weld area and the heat affected zones for coating. Weld spatter shall be removed. All welds are to be made in accordance with appropriate industrial welding standards.

5.2 Substrate requirements

5.2.1 General

The substrate shall be of a material that, when coated or otherwise processed, will maintain the structural integrity of the enclosure over the life of the apparatus.

5.2.2 Specification of substrate characteristics

The apparatus enclosure substrate shall exhibit a general corrosion rate not to exceed 1 mil (.001) per year and a maximum pit depth not to exceed 5 mil (.005) over the life of the apparatus, when exposed to natural corrosive environments.

5.2.3 Substrate performance requirements

Five (5) uncoated, welded substrate specimen (Figure 1) test panels and five (5) AISI 409 (Figure 2) stainless steel, unwelded, control test panels, when exposed to 1500 hours of salt spray in accordance with ASTM B117, shall be evaluated for percent weight loss. The average weight loss of each set of test panels shall not exceed 2.5% after the 1500 hours exposure. In addition, the ratio of the average percent weight loss between the specimen test panel and the control test panel sets shall not exceed 5 to 1. (It is not uncommon for the welded specimen test panel to exhibit greater weight loss due to the galvanic action between the weldment and the base metal.)

Copyright National Electrical Manufacturers Association
Provided by IHS under license with NEMA
No reproduction or networking permitted without license from IHS
Not for Resale

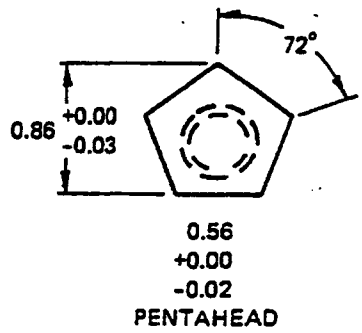

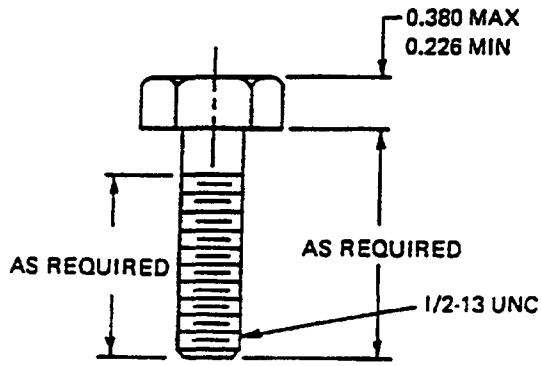

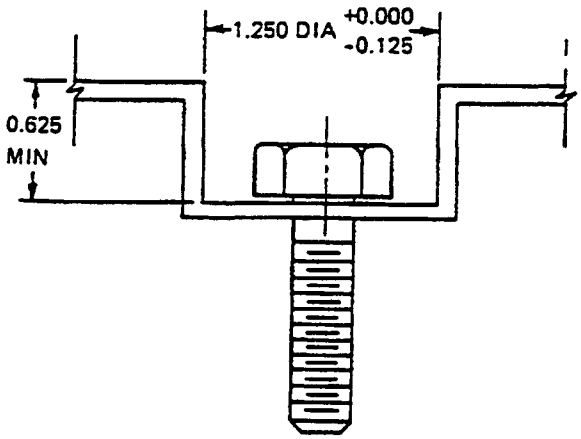

Cross Section of
Recessed Nonrotating Cup –
Preferred Method

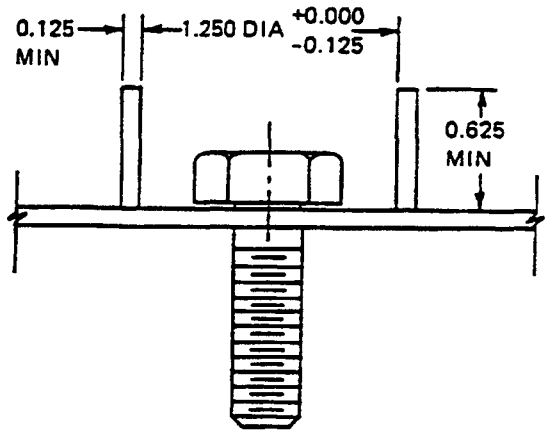

Cross Section of
Recessed Nonrotating Cup –
Acceptable Alternative

NOTES:
(1) All dimensions are in inches unless otherwise specified.
(2) The captive method is not shown.

Figure 1 – Captive and recessed pentahead bolts

Copyright National Electrical Manufacturers Association
Provided by IHS under license with NEMA
No reproduction or networking permitted without license from IHS
Not for Resale

The welded test panel shall be fabricated in accordance with Figure 1 using standard production welding, fabrication, and cleaning practices. The AISI 409 control test panel shall be unwelded but fabricated and pretreated using standard production practices prior to testing.

See Test Method A for the procedure for comparative weight loss analysis of the test panels.

5.3 Coating system requirements

5.3.1 General

All coated or gel-coated surfaces on the exterior or interior of the enclosure that may be exposed to the atmosphere shall be capable of meeting the performance tests required by this standard.

5.3.2 Specification of coating characteristics

If more than one coating system is used for different areas of the enclosure, the areas in which each is used shall be identified. The laboratory test performance data of each coating system shall be identified. The laboratory test performance data of each coating system shall be submitted for approval upon request. This data shall be resubmitted whenever there are changes in the method and/or materials.

5.3.3 Enclosure color

Unless otherwise specified, the topcoat color shall be Munsell 7GY3.29/1.5 pad-mount green.

5.4 Coating system test specimens

Test specimens shall consist of panels of the same material composition used in production. Test specimens shall be in accordance with Figures 1, 2, 3, 4, 5, and 6 as to size and type. Quantity and type of panels in each test is identified under the specific test. All panels shall be cleaned, coated, and cured using the production coating system. Coated test panels shall be conditioned at room temperature and humidity for a minimum of seven days prior to any testing.

5.5 Coating system performance requirements

5.5.1 Exposure test

5.5.1.1 Exposure test site

A marine environment for natural accelerated testing, located on the ocean or Gulf of Mexico, with a view of the surf-line that is unrestricted by buildings. Corrosion rate for an ingot of iron of AISI 1008 carbon steel shall be greater than 10 mils per year as determined by annual evaluation. Monitoring for chloride deposition (monthly), iron ingot corrosion rate (annual), temperature, and rainfall shall be maintained and historical data provided upon request.

NOTE—Examples of test sites that meet this criteria are Battelle Memorial Institute's Florida Materials Research Facility (Daytona Beach, Florida) and LaQue Corrosion Service's (Wrightsville Beach, NC) Marine Atmospheric Test Site.

5.5.1.2 Exposure test criteria

Three (3) coated panels, per Figure 3, shall be scribed per ASTM D1654 and tested for 12 weeks at a test site that meets the criteria in 5.5.1.1. The panels shall be exposed in a rack facing the ocean at a 30° angle from the horizontal and positioned to ensure that moisture runs down the length of the scribe line during the exposure period.

Copyright National Electrical Manufacturers Association
Provided by IHS under license with NEMA
No reproduction or networking permitted without license from IHS
Not for Resale

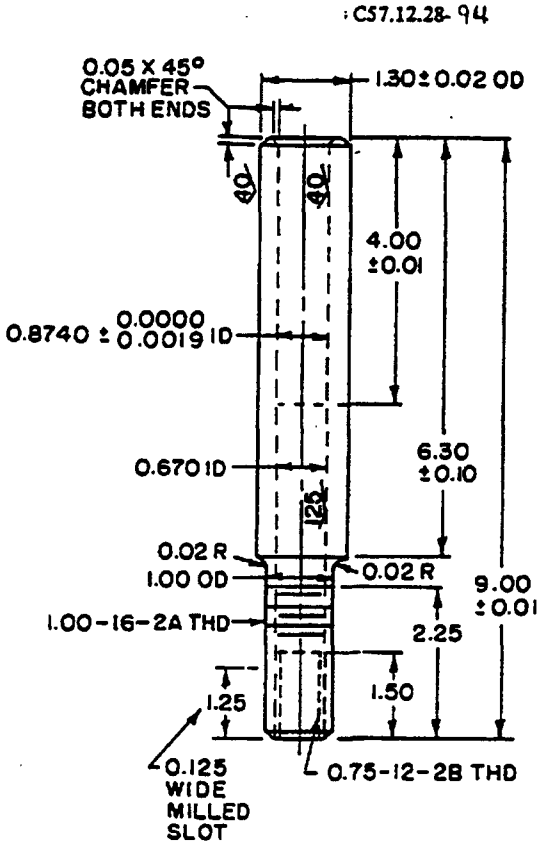

Part Number 02 – Steel 1.30 × 9.00

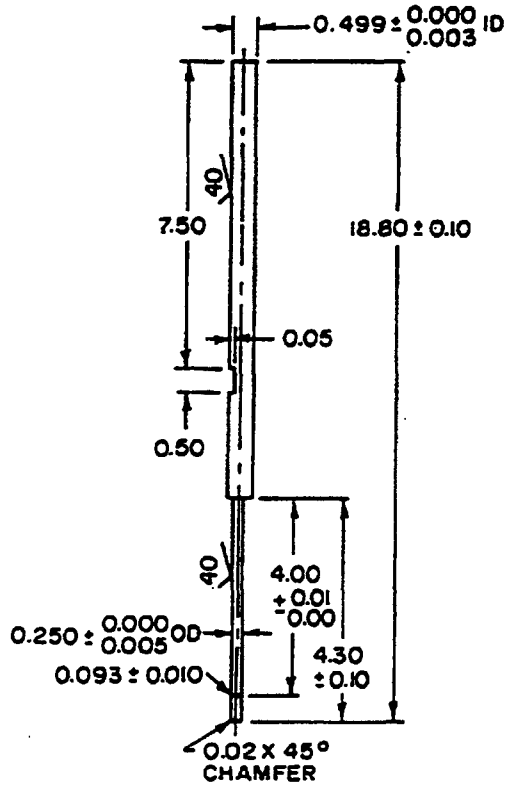

Part Number 07 – Drill Rod 0.50 × 18.80

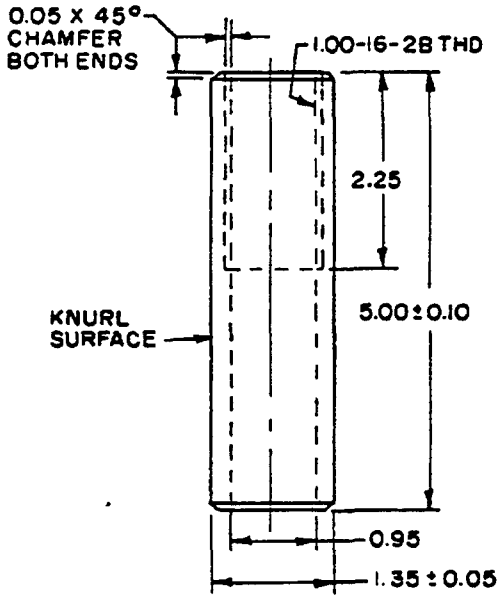

Part Number 01 – Steel 1.35 OD × 5.00

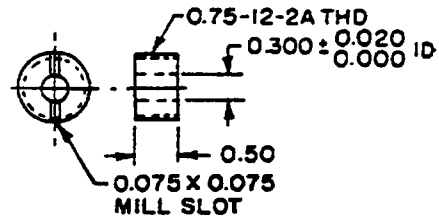

Part Number 03 – Steel 0.75 OD × 0.50

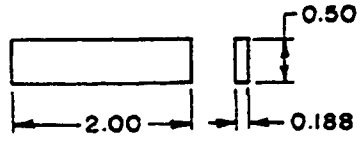

Part Number 09 – Steel 0.188 × 0.50 × 2.00

Figure 2 – Pry test bar

Copyright National Electrical Manufacturers Association
Provided by IHS under license with NEMA
No reproduction or networking permitted without license from IHS
Not for Resale

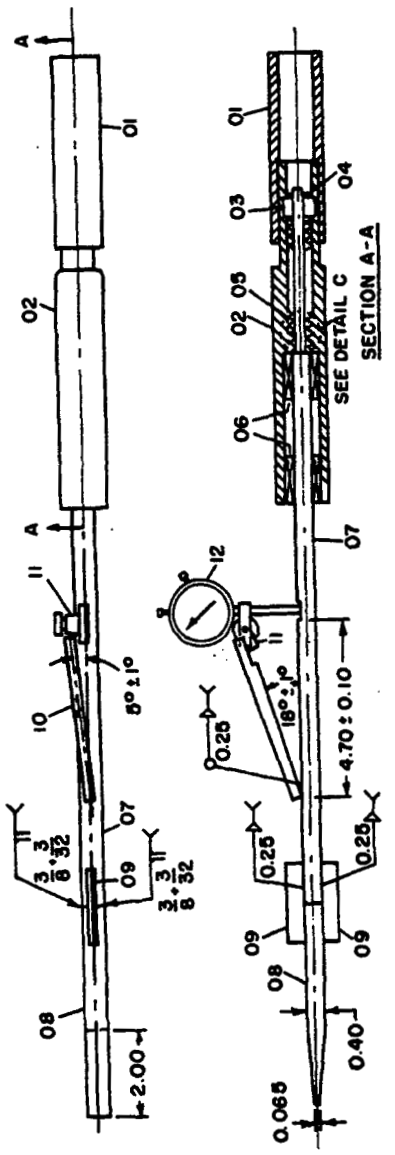

Bill of Materials

Part No.	Name	Quantity	Description
01	Handle	1	–
02	Spring Housing	1	–
03	Spring Housing	1	–
04	Roll Pin	1	Steel 0.093 OD x 0.750 Long
05	Spring Washer	100	Belleville Catalog #1B0500-022
06	Ball Bushing	2	Thompson Ball Bushing Catalog #A-81420
07	Shaft	1	–
08	Chisel	1	1/2 inch
09	Weld Pad	2	–
10	Hold Rod	1	Brown & Sharpe Catalog #599-7900
11	Slide Swivel	1	Brown & Sharpe Catalog #599-7906
12	Torque Indicator	1	Brown & Sharpe Catalog #8241-942

NOTES:
(1) Quantity of Part Number 05 may vary from 90 to 100.
(2) Part Number 04 must extend into slot to restrict turning motion of Part Number 07.
(3) Calibration Instruction – Before the pry (test) bar can be used to measure the axial and prying leverage forces described in the standard, the bar must be calibrated. This calibration is accomplished for the axial force by applying standard forces at the end of the handle (Part Number 01) and marking the compression of the pry bar handle along the pry bar shaft (Part Number 07). Suggested markings would be in 25-pound steps.
Next, the prying leverage must be calibrated by holding the pry bar tip (Part Number 08) in place and applying a standard force on the handle (Part Number 12) is recorded for steps in force on the handle. The results can be used to develop a calibration curve of deflection versus prying leverage. So, when the pry bar is used in a test, the calibration curve is used to determine the inch-pounds of force.

Figure 2 (*Continued*)

Figure 2 (*continued*)

Copyright National Electrical Manufacturers Association
Provided by IHS under license with NEMA
No reproduction or networking permitted without license from IHS
Not for Resale

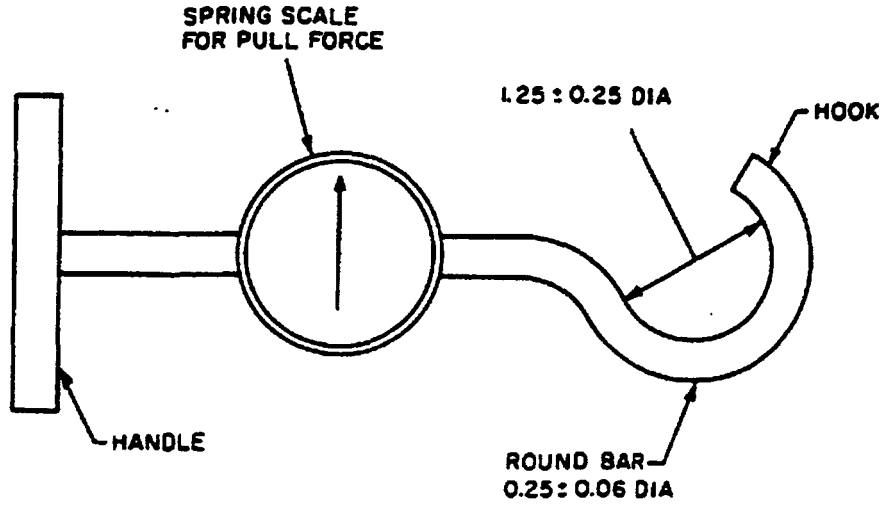

NOTES:
(1) All dimensions are in inches.
(2) Typical device: Iron Man scales, capacity: 200 lb, No. 1756T4, or the equivalent.

Figure 3 – Pull hook

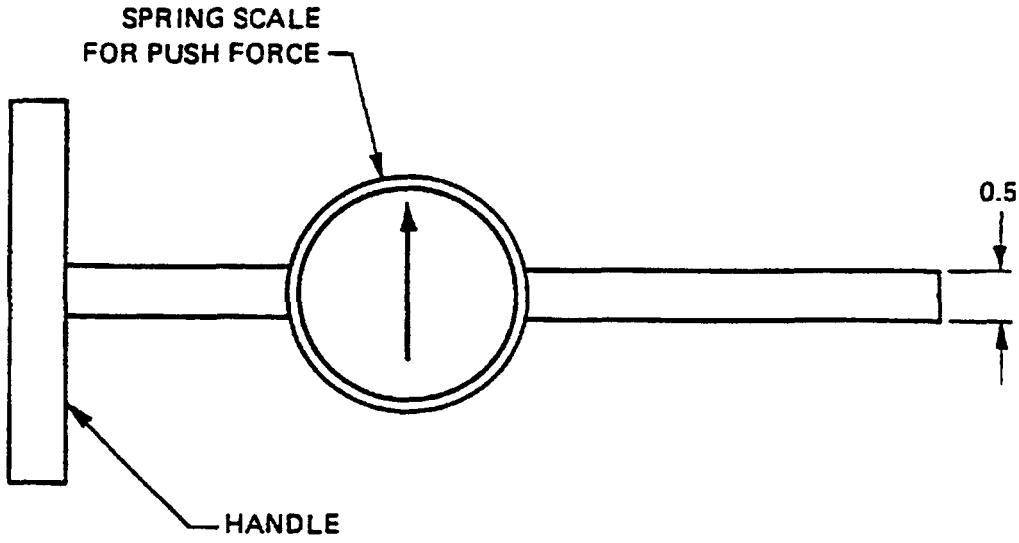

NOTE: All dimensions are in inches.

Figure 4 – Pushing tool

Copyright National Electrical Manufacturers Association
Provided by IHS under license with NEMA
No reproduction or networking permitted without license from IHS
Not for Resale

5.5.1.3 Exposure test evaluation

After the twelve (12) week exposure, prepare the scribe for evaluation per ASTM D1654, procedure A, method 2. The scribe shall be divided into fourteen (14) ¼ zones and the worst spot in each zone will be evaluated (exclude the first ¼ inch of the scribe at each end of the scribe line). The average of the fourteen (14) readings shall be rated per ASTM D 1654, Table 1. After a rating has been set for each of the three (3) panels, the average rating of the three (3) panels shall not be less than a 9 rating. The area away from the scribe shall have no blisters and be free of any corrosion bleed through. The ¼ inch area around the perimeter of the panel and hanging hole shall not be included in the rating of the face of the panel.

5.5.2 Cross hatch adhesion test

One (1) coated panel, per Figure 4, shall be scribed to bare metal in accordance with ASTM D3359. Method A shall be used for films thicker than 5 mils. Method B shall be used for films less than or equal to 5 mils. There shall be 100% adhesion to the substrate and between layers. A rating of 5A for Method A and 5B for Method B per ASTM D3359 is required.

5.5.3 Humidity test

Two (2) coated panels, per Figure 3, shall be tested for 1000 hours in accordance with ASTM D4585 except that the test shall be conducted at 45°C ± 1°C (113°F ± 2°F). Upon completion of the test, panels shall be evaluated for:

a) Blistering—There shall be no blistering observed on the surface of the panel when inspected within 15 minutes after removal from the cabinet.
b) Softening—After removal from the cabinet, allow the panels to air dry at room temperature for 24 ± 1 hours. There shall be no more than one (1) pencil hardness change when tested per ASTM D3363. Any color change shall be noted.

5.5.4 Insulating fluid resistance test (for liquid filled units only)

Partially immerse one (1) coated panel, per Figure 4, in the insulating liquid for 72 hours, at 100°C -105°C (212°F - 221°F). On the immersed portion of the panel, there shall be no loss of adhesion per ASTM D3359, no blisters, no streaking, and no more than one (1) pencil harness change when tested in accordance with ASTM D3363. Any color change shall be noted.

5.5.5 Ultraviolet accelerated weathering test

The following test is required only for coated surfaces on the exterior of the enclosure. Expose two (2) test panels, per Figure 4, for 500 hours in accordance with ASTM G53, utilizing the FS-40 bulb with a cycle of four hours ultraviolet at 60°C (140°F) followed by four hours condensation at 50°C (122°F). Loss of gloss shall not exceed 50% of original gloss as measured per ASTM D523. The coating shall not exhibit cracking or crazing under unaided visual inspection.

5.5.6 Abrasion resistance tabor abrader

The following test is required only for coated surfaces on the exterior of the enclosure. One (1) coated panel, per Figure 5, having the minimum dry film thickness of total coating system shall be tested using a CS-10 wheel and 1000 gram weight in accordance with ASTM D4060. A total number of 3000 cycles shall be run with the wheels resurfaced before testing and after each 500 cycle run. Upon completion of the test, no bare metal shall be present.

Copyright National Electrical Manufacturers Association
Provided by IHS under license with NEMA
No reproduction or networking permitted without license from IHS
Not for Resale

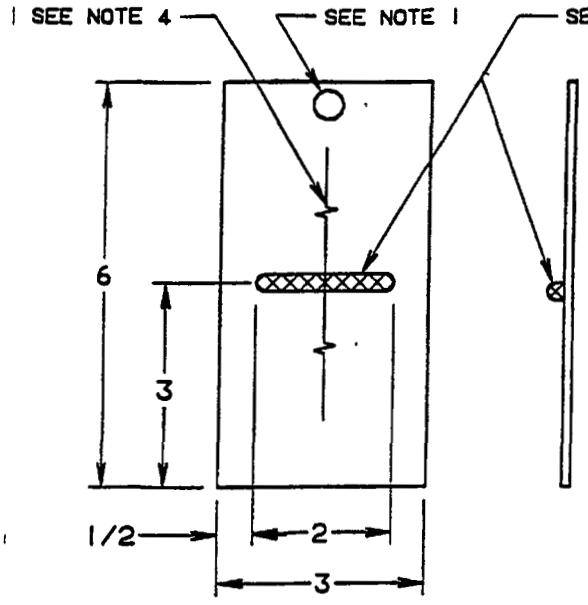

FIG 5

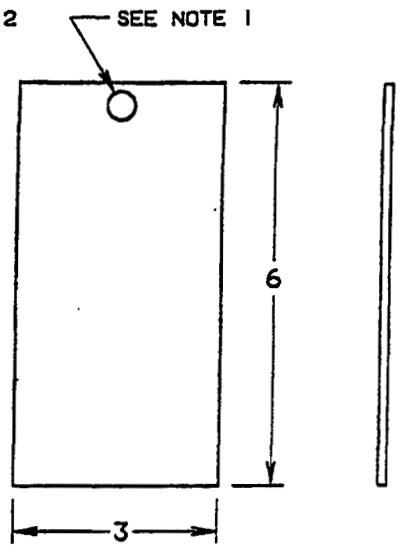

FIG 6

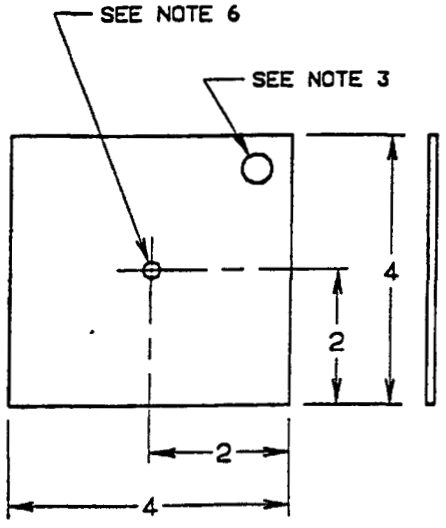

FIG 7

NOTES:

1. HOLE CAN BE PLACED IN PANEL FOR HANGING FOR PAINT OPERATIONS IF REQUIRED. LOCATE CENTERED ON SHORT DIMENSION AND 1/8" TO EDGE OF HOLE ON LONG DIMENSION. RECOMMENDED MAXIMUM HOLE SIZE 9/16" DIAMETER.
2. WELD BEAD TO BE THE TYPE METAL COMPOSITION AS THE PANEL. WELD BEAD TO BE 1/4" WIDE AND 1/4" HIGH.
3. HOLE CAN BE PLACED IN PANEL FOR HANGING, TO BE LOCATED IN ONE CORNER. RECOMMENDED MAXIMUM HOLE SIZE 9/16" DIAMETER.
4. SCRIBE PER ASTM D1654 ACROSS WELD APPROXIMATELY 4" SCRIBE LENGTH.
5. PANEL THICKNESS TO BE OF TYPICAL PRODUCTION STOCK USED IN THE MANUFACTURE OF DEVICES TEST IS INTENDED FOR.
6. 1/4" DIA. HOLE MAY REQUIRE REAMING TO FIT TABER ABRADER POST.

Figures 5, 6, and 7

Copyright National Electrical Manufacturers Association
Provided by IHS under license with NEMA
No reproduction or networking permitted without license from IHS
Not for Resale

5.5.7 Gravelometer test

Two (2) coated panels per Figure 6, are to be tested per ASTM D3170 at room temperature using 60 psi air pressure. The panels shall be evaluated for chips. Chip size shall not exceed 3 millimeters (greatest dimension).

6 Labels

6.1 Purpose

Labeling can be an important aspect of pad-mounted enclosure integrity. Labeling can alert or inform an individual of potential hazard. Pad-mounted enclosures should be designed to achieve a high degree of integrity. When labels are attached to pad-mounted enclosures, they should be located as near the hazard as practicable. Labels should be concise and simple to understand, and should accurately communicate the type and degree of hazard.

6.2 Application

The application of any labels, whether intended for interior or exterior use, shall be subject to an agreement between the purchaser and the manufacturer.

7 General

7.1 Shipment

The manufacturer shall provide a method of shipment that will allow the enclosure to be received by the purchaser such that it still meets the performance tests required by this standard.

7.2 Coating repair procedure

A coating system repair procedure shall be recommended by the manufacturer.

Copyright National Electrical Manufacturers Association
Provided by IHS under license with NEMA
No reproduction or networking permitted without license from IHS
Not for Resale

Test Method A

Procedure for comparative weight loss on welded and non-welded unpainted stainless steel

a) Inspect welded panels to assure that welds are smooth and will not collect salt in any area when exposed in accordance with ASTM B117 with the major axis of the weld upright.

b) Ensure that all test panels are thoroughly dry. Record the weight of each panel to the nearest 0.0001 gram.

c) Expose all test panels to 1500 hours salt spray in accordance with ASTM B117.

d) After exposure, immediately remove the test specimen and immerse in warm water.

e) Manually scour each panel while wet using a nonmetallic, abrasive pad such as Scotchbrite #86 heavy-duty pads or equivalent. Remove rust from pits with a sharp tool.

f) After scouring all panels, rinse in clean warm water (never let the panels dry until rinsing is complete).

g) Ensure the test panels are thoroughly dry.

h) Reweigh the panels to the nearest 0.0001 gram and calculate the percent weight loss.

Copyright National Electrical Manufacturers Association
Provided by IHS under license with NEMA
No reproduction or networking permitted without license from IHS
Not for Resale