STD·NEMA C57·12·28-ENGL 1996 ■ 6470247 0514869 347 ■

AMERICAN NATIONAL STANDARD

American National Standard

ANSI C57.12.28-1996

American National Standard

Pad-Mounted Equipment— Enclosure Integrity

NATIONAL ELECTRICAL MANUFACTURERS ASSOCIATION
1300 NORTH 17TH STREET, SUITE 1847, ROSSLYN, VA 22209
(703) 841-3200 FAX: (703) 841-3300

Copyright National Electrical Manufacturers Association
Provided by IHS under license with NEMA
No reproduction or networking permitted without license from IHS
Not for Resale

ANSI/IEEE C57.12.28-1996

AMERICAN NATIONAL STANDARD

Pad-Mounted Equipment—Enclosure Integrity

Secretariat

National Electrical Manufacturers Association

Approved September 23, 1996

American National Standards Institute, Inc.

Copyright National Electrical Manufacturers Association
Provided by IHS under license with NEMA
No reproduction or networking permitted without license from IHS

Not for Resale

American National Standard

Approval of an American National Standard requires verification by ANSI that the requirements for due process, consensus, and other criteria for approval have been met by the standards developer.

Consensus is established when, in the judgment of the ANSI Board of Standards Review, substantial agreement has been reached by directly and materially affected interests. Substantial agreement means much more than a simple majority, but not necessarily unanimity. Consensus requires that all views and objections be considered, and that a concerted effort be made toward their resolution.

The use of American National Standards is completely voluntary; their existence does not in any respect preclude anyone, whether he has approved the standards or not, from manufacturing, marketing, purchasing, or using products, processes, or procedures not conforming to the standards.

The American National Standards Institute does not develop standards and will in no circumstances give an interpretation of any American National Standard. Moreover, no person shall have the right or authority to issue an interpretation of an American National Standard in the name of the American National Standards Institute. Requests for interpretations shall be addressed to the secretariat or sponsor whose name appears on the title page of this standard.

CAUTION NOTICE: This American National Standard may be revised or withdrawn at any time. The procedures of the American National Standards Institute require that action be taken to reaffirm, revise, or withdraw this standard no later than five years from the date of approval. Purchasers of American National Standards may receive current information on all standards by calling or writing the American National Standards Institute.

Published by

National Electrical Manufacturers Association
1300 N. 17th Street, Rosslyn, Virginia 22209

Copyright © 1998 National Electrical Manufacturers Association
All rights reserved.

No part of this publication may be reproduced in any form, in an electronic retrieval system or otherwise, without prior written permission of the publisher.

Printed in the United States of America

Copyright National Electrical Manufacturers Association
Provided by IHS under license with NEMA
No reproduction or networking permitted without license from IHS

Not for Resale

CONTENTS

Page

Foreword iii
1 Purpose and scope 1
1.1 Purpose 1
1.2 Scope 1

2 Referenced and related standards 1
2.1 Referenced standards 1
2.1.1 ASTM standards 1
2.1.2 Society of Automotive Engineers standards 2
2.1.3 Related American National standards (ANSI) 2

3 Definitions 2
3.1 Routine tests 2
3.2 Design tests 2
3.3 Conformance tests 3
3.4 Pad-mounted enclosure 3
3.5 Dry film thickness 3
3.6 Carbon steel 3
3.7 Padlock 3
3.8 Enclosure security 3
3.9 Axial force 3
3.10 Prying leverage 3

4 Enclosure security 3
4.1 Test requirements 3
4.1.1 Enclosure mounting 4
4.1.2 Water resistance 4
4.1.3 Sharp corners 4
4.1.4 Panel assembly 4
4.1.5 Door hardware 4
4.1.6 Handhole covers 4
4.1.7 Locking/latching devices 4
4.1.8 Enclosure access 4
4.1.9 Fire resistance 4
4.2 Test equipment 6
4.2.1 Pry bar 6
4.2.2 Pull tool 6
4.2.3 Push tool 9
4.2.4 Probe wire 10
4.3 Resistance to foreign objects 10
4.3.1 General 10
4.3.2 Pry tests 10
4.3.3 Pull tests 10
4.3.4 Wire probe tests 10
4.3.5 Deflection tests 11
4.3.6 Operation test 11
4.4 Test values 11

5 Enclosure design and coating system requirements 11
5.1 Enclosure design requirements objective 11
5.1.1 Accessibility 11
5.1.2 Contaminate accumulation 11
5.1.3 Welds–surface preparation 11
5.2 Coating system requirements 11

Copyright National Electrical Manufacturers Association
Provided by IHS under license with NEMA
No reproduction or networking permitted without license from IHS
Not for Resale

5.2.1 General 11
5.2.2 Specifications of coating characteristics 11
5.2.3 Coating touch-up prior to shipment 12
5.2.4 Enclosure color 12
5.3 Coating system test specimens 12
5.4 Coating system performance requirements 12
5.4.1 Salt spray test 12
5.4.2 Cross hatch adhesion test 12
5.4.3 Humidity test 12
5.4.4 Impact test 14
5.4.5 Insulating fluid resistance test (for liquid filled units only) 14
5.4.6 Ultraviolet accelerated weathering test 14
5.4.7 Ultraviolet accelerated weathering (QUV) and simulated corrosive atmospheric breaking (SCAB) 14
5.4.8 Abrasion resistance tabor abrader 14
5.4.9 Gravelometer test 14

6 Labels 16
6.1 Purpose 16
6.2 Application 16

7 General 16
7.1 Shipment 16
7.2 Coating repair procedure 16

Appendix 1 17

Figures

Figure 1 Captive and recessed pentahead bolts 5
Figure 2 Pry test bar 7
Figure 3 Pull hook 9
Figure 4 Pushing tool 9
Figure 5 13
Figure 6 13
Figure 7 13
Figure 8 15

Tables

Table 1 Test values 10

Copyright National Electrical Manufacturers Association
Provided by IHS under license with NEMA
No reproduction or networking permitted without license from IHS
Not for Resale

Foreword (This Foreword is not part of American National Standard C57.12.28-1996.)

The Accredited Standards Committee on Transformers, Regulators, and Reactors, C57, has for a number of years been developing and correlating standards on transformers and regulators. The data used in this work have been gathered from many sources, including the standards of the Institute of Electrical and Electronics Engineers and the National Electrical Manufacturers Association, reports of committees of the Edison Electric Institute, and others.

This standard and the related standards on three- and single-phase distribution transformers were prepared by the Joint C57/C37 Working Group on Enclosures.

Suggestions for improvement of this standard will be welcome. They should be sent to the National Electrical Manufacturers Association, 1300 N. 17th Street, Rosslyn, Virginia 22209.

This standard was processed and approved for submittal to ANSI by Accredited Standards Committee on Transformers, Regulators, and Reactors, C57, and Accredited Standards Committee, C37, Switchgear. Approval of the standard does not necessarily imply that all committee members voted for its approval.

At the time of approval, the Working Group members were as follows:

Gerald A. Paiva, Chair

A. Ghafourian	M. Mingoia	R. Stahara
K. Hanus	D. Peters	J. Valdes
J. Malloy	R. Scheu	D. Whitley

Accredited Standards Committee on Transformers, Regulators and Rectors, C57:

P. J. Hopkinson, NEMA Delegation, Chairman
J. C. Thompson, EL&P Delegation, Vice Chairman
John A. Gauthier, NEMA, Secretary

Organization	*Committee Member*
U.S. Dept. of Energy, Western Area Power Admin.	Kenneth C. Wolohon
Dept. of the Navy, Civil Engineer Corps.	Howard Stickley
Dept. of the Interior, Bureau of Reclamation	R. Chadwick
Department of Agriculture, R.E.A.	J. Bohlk
Tennessee Valley Authority	F. Lewis
Underwriters Laboratories, Inc.	W. O'Grady

Copyright National Electrical Manufacturers Association
Provided by IHS under license with NEMA
No reproduction or networking permitted without license from IHS
Not for Resale

Electric Light & Power Company (EL&P)	P. E. Orehek, Chairman of Delegation
	T. Diamantis
	J. W. Howard
	M. Mingoia (Alternate)
	G. Paiva
	J. Sullivan
	J. Thompson
Institute of Electrical and Electronics Engineers (IEEE)	L. Savio, Chairman of Delegation
	J. D. Borst
	J. Davis
	J. H. Harlow
	H. Smith (Alternate)
	R. A. Veitch
National Electrical Manufacturers Association (NEMA)	G. D. Coulter
	P. Dewever (Alternate)
	S. Douglas
	P. J. Hopkinson (Alternate)
	K. R. Linsley
	J. J. Nay (Alternate)
	A. Ghafourian
	R. Plaster
	Harral Robin
	Susan Endersbe

Accredited Standards Committee for Switchgear, C37:

E. Byron, Chairman
A. K. McCabe, Executive Vice-Chairman, HV Standards
J. C. Scott, Executive Vice-Chairman, LV Standards
D. L. Swindler, Executive Vice-Chairman, IEC Activities
M. Calwise, Secretary

Organization	*Committee Member*
Association of Iron and Steel Engineers	Vacant
Electric Light and Power Group	M. C. Mingoia (Acting Chairman)
	D. J. Borchart
	T. E. Bruck (Alt.)
	D. E. Galicia
	J. L. Koepfinger
	J. H. Provanzana
Institute of Electrical and Electronics Engineers	D. F. Peelo (Chairman)
	L. B. Beard
	P. W. Dwyer
	A. Monroe
	D. Sigmon
	S. C. Atkinson (Alt.)
	D. G. Kumbera (Alt.)
	L. V. McCall (Alt.)

Copyright National Electrical Manufacturers Association
Provided by IHS under license with NEMA
No reproduction or networking permitted without license from IHS
Not for Resale

National Electrical Manufacturers Association	R. Garzon (Chairman) W. Kracht H. L. Miller T. Olsen S. Stone E. Byron (Alt.) G. T. Jones (Alt.) G. Sakats (Alt.) D. L. Swindler (Alt.)
Testing Laboratory Group	L. Frier, MET Electrical Testing Association P. Notarian, Underwriters Laboratories, Inc.
Tennessee Valley Authority	D. N. Reynolds
U.S. Dept. of the Army–Office of the Chief of Engineers	J. A. Gilson
U.S. Dept. of the Navy–Naval Construction Battalion Center	R. R. Nicholas
Western Area Power Administration	G. D. Birney

Copyright National Electrical Manufacturers Association
Provided by IHS under license with NEMA
No reproduction or networking permitted without license from IHS
Not for Resale

AMERICAN NATIONAL STANDARD **ANSI C57.12.28-1996**

Pad-mounted equipment—enclosure integrity

1 Purpose and scope

1.1 Purpose

This standard covers conformance tests and requirements for the integrity of above grade pad-mounted enclosures containing apparatus energized in excess of 600 volts that may be exposed to the public including, but not limited to, the following types of equipment enclosures:

a) Pad-mounted capacitors or inductors
b) Pad-mounted distribution transformers
c) Pad-mounted junction enclosures
d) Pad-Mounted metering equipment
e) Pad-mounted switchgear

This standard does not cover installations that are under the exclusive control of electric utilities and that are located in such a manner that access to the equipment is controlled exclusively by the utility.

1.2 Scope

The purpose of this standard is to describe the requirements for a comprehensive integrity system for pad-mounted enclosures providing long field life with minimum maintenance and positive safety features.

2 References and related standards

2.1 Referenced standards

This standard is intended to be used with the following standards.

2.1.1 ASTM standards

ASTM B117-90, *Standard Method of Salt Spray (Fog Testing)*

ASTM D523-89, *Standard Test Method for Specular Gloss*

ASTM D660-87, *Method for Evaluating Degree of Checking of Exterior Paint*

ASTM D714-87, *Method of Evaluating Degree of Blistering Paints*

ASTM D1654-92, *Method for Evaluation of Painted or Coated Specimens Subjected to Corrosive Environments*

ASTM D2794-92, *Standard Test Method for Resistance or Organic Coatings to the Effects of Rapid Deformation (Impact)*

ASTM D3170-91, *Test Method for Chip Resistance of Coatings*

ASTM D3359-92, *Standard Methods for Measuring Adhesion by Tape Test*

ASTM D3363-92, *Test Method for Film Hardness by Pencil Test*

Copyright National Electrical Manufacturers Association
Provided by IHS under license with NEMA
No reproduction or networking permitted without license from IHS
Not for Resale

ASTM D4060-93, *Standard Test Method for Abrasion Resistance of Organic Coatings by the Tabor Abrader*

ASTM D4585-92, *Standard Practice for Testing Water Resistance of Coatings Using Controlled Condensation*

ASTM G53-91, *Standard Recommended Practice for Operating Light and Water Exposure Apparatus (Fluorescent UV-Condensation Type) for Exposure of Nonmetallic Materials*

2.1.2 Society of Automotive Engineers standards

Society of Automotive Engineers
400 Commonwealth Boulevard
Warrendale, PA 15906

SAE J400, *Test for Chip Resistance of Surface Coatings*

2.1.3 Related American National standards (ANSI)

ANSI C2-93, *National Electrical Safety Code*

ANSI C57.12.20 through C57.12.39, *ANSI Standards for Distribution Transformers*

ANSI/IEEE C42.100-84, *Standard Dictionary of Electrical Electronics Terminology*

3 Definitions

3.1 Routine tests

Tests made for quality control by the manufacturer on every device or representative samples, or on parts or materials as required to verify during production that the product meets the design specifications and applicable standards.

NOTES

1 Certain quality assurance tests on identified critical parts of repetitive high-production devices may be tested on a planned statistical sampling basis.

2 "Routine tests" are sometimes called "Production tests."

3.2 Design tests

Tests made by the manufacturer to determine the adequacy of the design of a particular type or model of equipment, or its component parts, to meet its assigned ratings and to operate satisfactorily under normal conditions and under special conditions, if specified. These tests may be used to demonstrate compliance with applicable standards in the industry.

NOTE—Design tests, sometimes called type tests, are made on representative apparatus or prototypes to verify the validity of design analysis and calculation methods and to substantiate the ratings assigned to all other apparatus of basically the same design. These tests may also be used to evaluate the modification of a previous design and to ensure that performance has not been adversely affected. Test data from previous similar designs may be used for current designs, where appropriate. Once made, the tests need not be repeated unless the design is changed so as to modify performance.

Copyright National Electrical Manufacturers Association
Provided by IHS under license with NEMA
No reproduction or networking permitted without license from IHS
Not for Resale

3.3 Conformance tests

Certain performance tests are conducted to demonstrate compliance with the applicable standards. The test specimen is normally subjected to all planned routine tests prior to initiation of the conformance test program.

NOTE—The conformance tests may, or may not, be similar to certain design tests. Demonstration of margins (capabilities) beyond the standard requirements is unnecessary.

3.4 Pad-mounted enclosure

An enclosure containing electrical apparatus, typically located outdoors at ground level where the general public has direct contact with the exterior surfaces of the equipment. The general construction of this equipment shall be such that authorized personnel may obtain access to the apparatus inside the equipment compartment(s).

3.5 Dry film thickness

Thickness of any applied coating(s) measured after curing.

3.6 Carbon steel

A steel containing only residual quantities of elements other than carbon, except those added for deoxidation or to counter the deleterious effects of residual sulfur. Silicon is usually limited to about 0.60%, and manganese to about 1.65%. Also termed plain carbon steel, ordinary steel, straight carbon steel. (Reference: The Metals Black Book VI, Ferrous Edition.)

3.7 Padlock

A locking device specified by the user that will prevent the disengagement of the penta head device (e.g., key or combination lock, one time or twist lock, single use lock, or similar device.)

3.8 Enclosure security

The completely assembled apparatus will resist unauthorized entry when tested in accordance with the procedures of this standard.

3.9 Axial force

A force applied along the axis of the pry bar from its handle to its pry tip.

3.10 Prying leverage

A force at right angles to the handle times the distance from this force to the point of insertion of the pry tip into a joint, crevice, or similar opening in enclosure.

4 Enclosure security

4.1 Test requirements

In addition to passing the tests defined in this standard, the construction of pad-mounted enclosure shall comply with the requirements of 4.1.1 through 4.1.9.

Copyright National Electrical Manufacturers Association
Provided by IHS under license with NEMA
No reproduction or networking permitted without license from IHS
Not for Resale

4.1.1 Enclosure mounting

The bottom edge of the enclosure shall provide for flush mounting on a flat, rigid mounting surface.

4.1.2 Water resistance

The enclosure shall restrict the entry of water (other than flood water) into the enclosure so as not to impair the operation of the apparatus inside.

4.1.3 Sharp corners

External sharp corners and projections shall be minimized.

4.1.4 Panel assembly

Panels shall be fastened or hinged to resist disassembly, breaking, or prying open from the outside with the doors in the closed and locked position. Normal entry shall be possible only with the use of proper access tools. There shall be no exposed screws, bolts, or other fastening devices that are externally removable (with the exception of penta head bolts provided for extra security) that would provide access to energized parts in the enclosure.

4.1.5 Door hardware

Locking bolts and associated threaded receptacles, hinges, and hinge pins shall be AISI type 304 stainless steel or material of equivalent corrosion resistance.

4.1.6 Handhole covers

If handhole covers are exposed, they shall be secured from the inside of the enclosure.

4.1.7 Locking/latching devices

The latching device(s) shall be designed and constructed of such a material so as to resist breaking or bending. The provision for locking device(s) on the enclosure door(s) shall be designed and located as to comply with the defined tests.

4.1.8 Enclosure access

All access doors shall be fastened with a device that uses a penta head tool to permit unlatching the door only after the padlock has been removed. This penta head device or bolt shall be coordinated such that the padlock may not be inserted into hasp until the access door is fully latched and the penta head device is secured. Enclosures without latches shall have padlock and penta head bolt provisions, and shall be coordinated to prevent insertion of the padlock into the hasp until the bolt head is completely seated. The padlock shall be removed before the penta head bolt can be disengaged. A minimum of one penta head device or bolt and padlocking means shall be provided. The penta head device or bolt shall be surrounded by a non-rotating guard or shall be recessed such that the penta head device or bolt can be engaged only by a proper tool. The dimensions of the penta head bolt and non-rotating recess shall comply with Figure 1. The penta head device or bolt shall not be readily removable during normal operation of the door(s) or hood(s), and, if removed or disengaged, there shall be no holes remaining that would permit entry of a wire into the enclosure. More than one door may be fastened with a single padlock and penta head device or bolt.

4.1.9 Fire resistance

The enclosure shall be constructed of fire-resistant material.

Copyright National Electrical Manufacturers Association
Provided by IHS under license with NEMA
No reproduction or networking permitted without license from IHS
Not for Resale

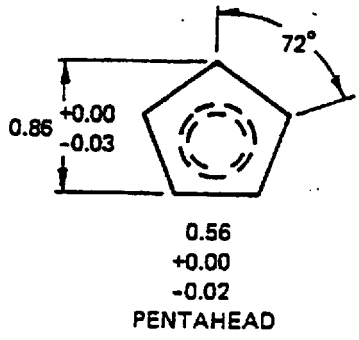

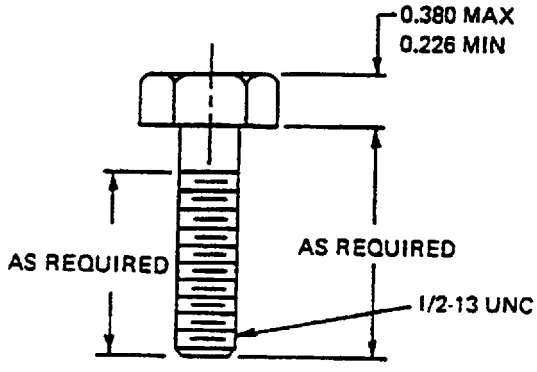

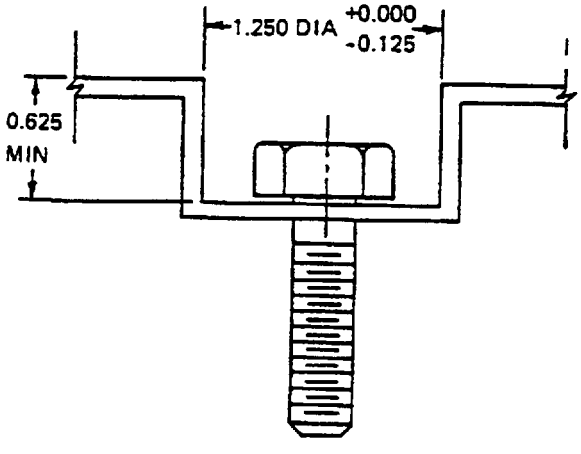

Cross Section of
Recessed Nonrotating Cup –
Preferred Method

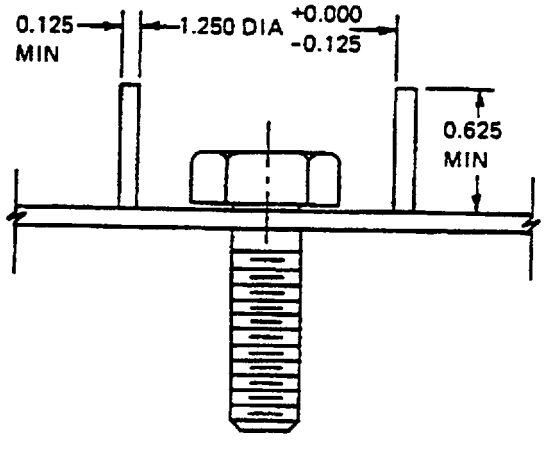

Cross Section of
Recessed Nonrotating Cup –
Acceptable Alternative

NOTES:
(1) All dimensions are in inches unless otherwise specified.
(2) The captive method is not shown.

Figure 1 – Captive and recessed pentahead bolts

Copyright National Electrical Manufacturers Association
Provided by IHS under license with NEMA
No reproduction or networking permitted without license from IHS
Not for Resale

4.2 Test equipment

The tests for enclosure security shall be conducted with the following equipment or equivalent.

4.2.1 Pry bar

The pry bar, constructed according to Figure 2, shall be used for the pry tests. The force described in 4.2.1.1 and 4.2.1.2 shall be applied to the handle.

4.2.1.1 When an axial force is applied to the handle, the stack of Belleville washers is compressed. The amount of compression is a measure of the magnitude of the axial force applied. Using a scale or other force-measuring device, the pry bar shall be calibrated to measure the axial force used to force the tip into the joint under test.

4.2.1.2 The prying leverage applied can be measured indirectly by measuring the deflection of the pry bar. The indicator is mounted on the pry bar and set to measure the deflection of a certain length of the bar. A calibration can be made that will result in a table or curve showing prying leverage versus reading of the indicator.

4.2.2 Pull tool

The device shown in Figure 3 shall be used in the pull tests.

Copyright National Electrical Manufacturers Association
Provided by IHS under license with NEMA
No reproduction or networking permitted without license from IHS
Not for Resale

C57.12.28-94

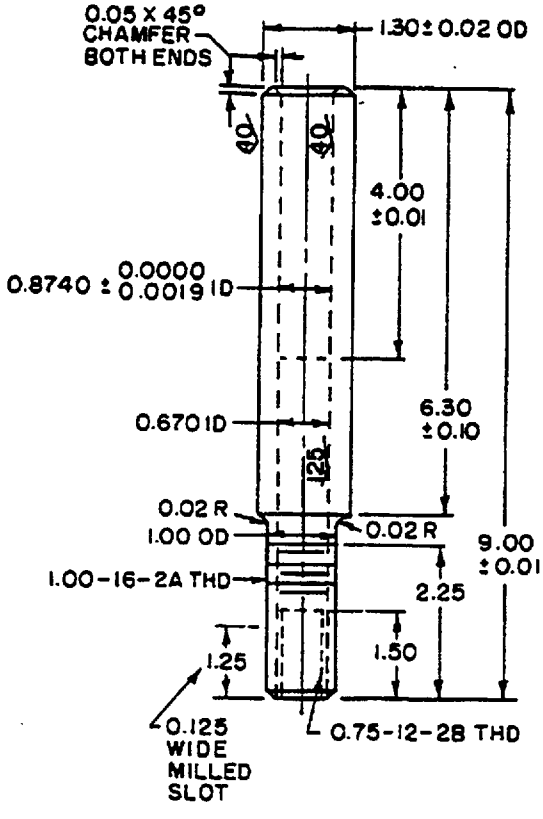

Part Number 02 – Steel 1.30 × 9.00

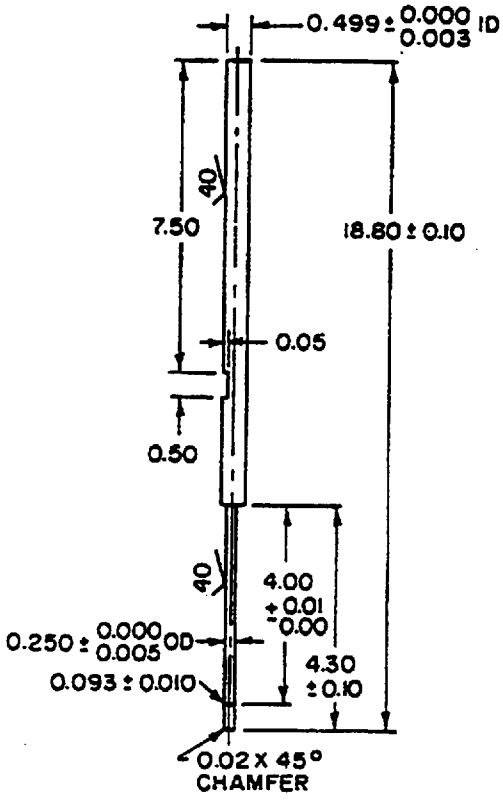

Part Number 07 – Drill Rod 0.50 × 18.80

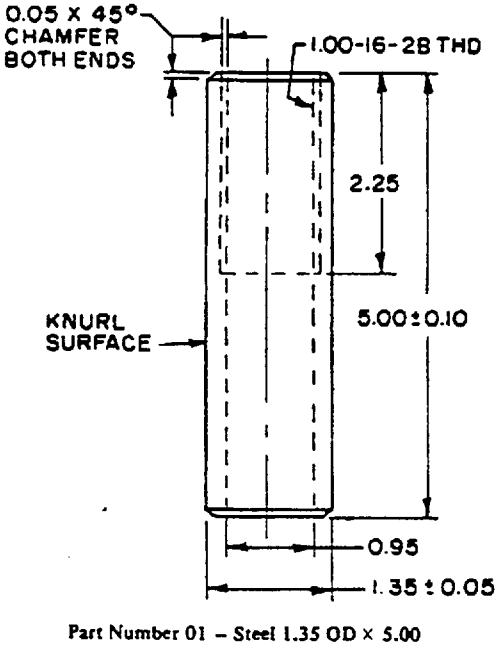

Part Number 01 – Steel 1.35 OD × 5.00

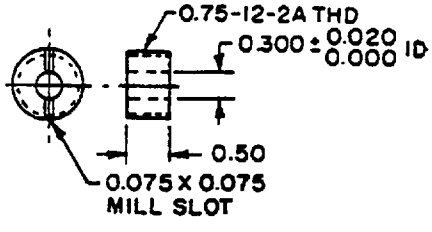

Part Number 03 – Steel 0.75 OD × 0.50

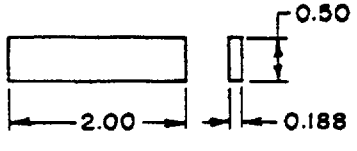

Part Number 09 – Steel 0.188 × 0.50 × 2.00

Figure 2 – Pry test bar

Copyright National Electrical Manufacturers Association
Provided by IHS under license with NEMA
No reproduction or networking permitted without license from IHS
Not for Resale

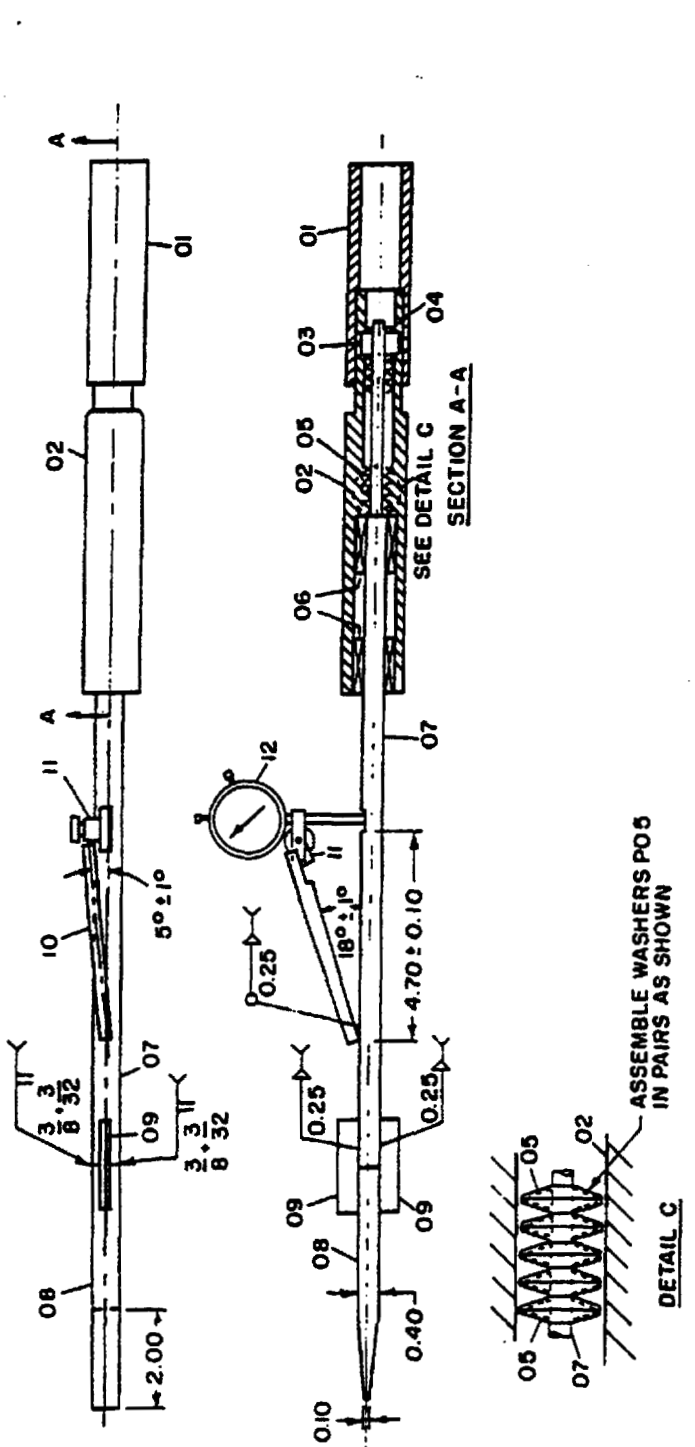

Bill of Materials

Part No.	Name	Quantity	Description
01	Handle	1	–
02	Spring Housing	1	–
03	Spring Housing	1	–
04	Roll Pin	1	Steel 0.093 OD × 0.750 Long
05	Spring Washer	100	Belleville Catalog #180500-022
06	Ball Bushing	2	Thompson Ball Bushing Catalog #A-81420
07	Shaft	1	–
08	Chisel	1	1/2 inch
09	Weld Pad	2	–
10	Hold Rod	1	Brown & Sharpe Catalog #599-7900
11	Slide Swivel	1	Brown & Sharpe Catalog #599-7906
12	Torque Indicator	1	Brown & Sharpe Catalog #8241-942

NOTES:
(1) Quantity of Part Number 05 may vary from 90 to 100.
(2) Part Number 04 must extend into slot to restrict turning motion of Part Number 07.
(3) Calibration Instruction – Before the pry (test) bar can be used to measure the axial and prying leverage forces described in the standard, the bar must be calibrated. This calibration is accomplished for the axial force by applying standard forces at the end of the handle (Part Number 01) and marking the compression of the pry bar handle along the pry bar shaft (Part Number 07). Suggested markings would be in 25-pound steps.
Next, the prying leverage must be calibrated by holding the pry bar tip (Part Number 08) in place and applying a standard force on the handle (Part Number 02). The deflection of the dial indicator (Part Number 12) is recorded for steps in force on the handle. The results can be used to develop a calibration curve of *deflection versus prying leverage*. So, when the pry bar is used in a test, the calibration curve is used to determine the inch-pounds of force.

Figure 2 (*continued*)

Copyright National Electrical Manufacturers Association
Provided by IHS under license with NEMA
No reproduction or networking permitted without license from IHS
Not for Resale

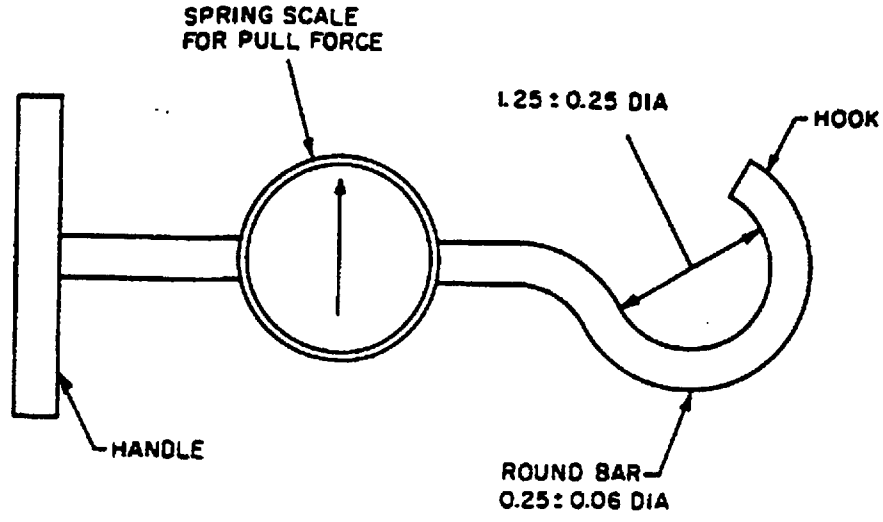

NOTES:
(1) All dimensions are in inches.
(2) Typical device: Iron Man scales, capacity: 200 lb, No. 1756T4, or the equivalent.

Figure 3 – Pull hook

4.2.3 Push tool

A device that has an 0.5 inch x 0.5 inch square face as shown in Figure 4 with associated indicator to measure axial force shall be used to perform the deflection test.

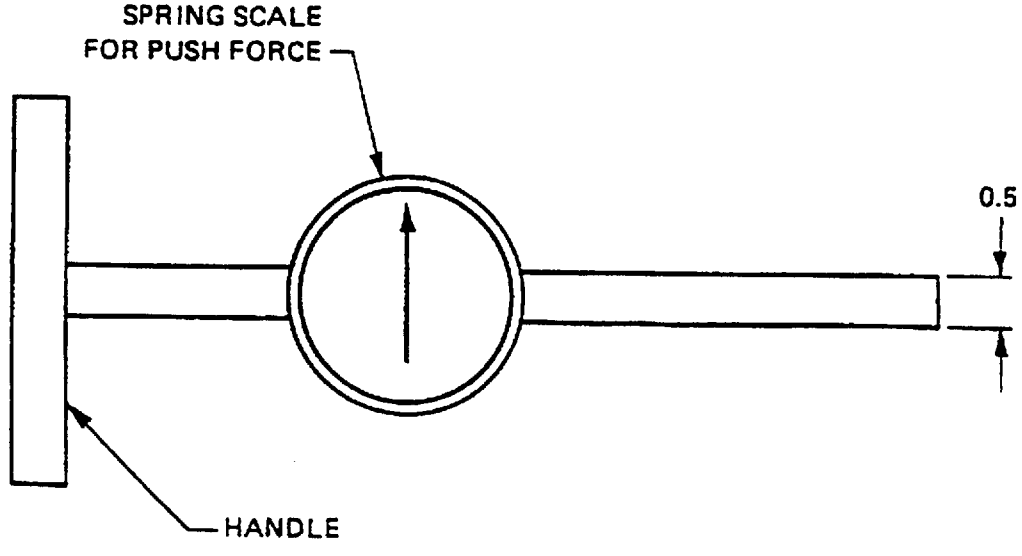

NOTE: All dimensions are in inches.

Figure 4 – Pushing tool

Copyright National Electrical Manufacturers Association
Provided by IHS under license with NEMA
No reproduction or networking permitted without license from IHS
Not for Resale

4.2.4 Probe wire

The probing wire shall be bare number 14 AWG soft-drawn solid copper wire 10 feet long.

4.3 Resistance to foreign objects

The following tests are to be performed on the enclosure. The enclosure shall resist the entry of foreign objects such as sticks, rods, or wires.

4.3.1 General

The pad-mounted enclosure shall be mounted on a flat surface according to the manufacturer's specification. With the access doors closed and locked, the following sequence of tests shall be performed:

a) Pry tests
b) Wire probe tests
c) Pull tests
d) Wire probe tests
e) Deflection tests
f) Operation test

Table 1—Test values

Inward axial force	50 pounds
Prying leverage tests	900 inch pounds
Pull test	150 pounds
Deflection test	200 pounds

4.3.2 Pry tests

The pry bar shall be used on all joints, crevices, hinges, locking means, and other objects that exist between the enclosure components, including the enclosure/pad interface. The pry bar shall be permitted to be placed at any angle to the enclosure surface. The tip of the bar shall first be inserted in the opening being tested using the value of axial force specified in Table 1. Then, with that axial force being maintained, the prying force specified in Table 1 applied alternatively first in one direction and then in the opposite direction (i.e., once in each direction). Application of either or both axial and prying force shall be maintained so long as relaxation is occurring. When relaxation ceases, or if no relaxation occurs, the pry bar shall be removed and pry test reapplied at the same location. When relaxation ceases or no relaxation occurs after the second test, the pry bar shall be removed and applied at an untested location.

4.3.3 Pull tests

A pulling force shall be applied to the critical points of all enclosure parts that can be engaged by the pulling hook. A pulling force not exceeding the values in Table 1 shall be permitted to be exerted at any angle to the enclosure surface. This force is to be maintained during any relaxation. When relaxation ceases, or if no relaxation occurs, the pull test shall be terminated. The hook shall then be inserted into any other part in which it can engage, and the test shall be repeated at the new location. All parts that can be engaged by the pull hook shall be tested once.

4.3.4 Wire probe tests

Following the pry tests and pull tests described in 4.3.2 and 4.3.3, an attempt to penetrate the enclosure with the probe wire shall be made. This penetration shall be attempted at all crevices and joints. The wire shall be straight with no prebends and shall be gripped by the tester with his or her bare hands. If the wire enters the joint, the wire shall be continually pushed and bent until either it can no longer be pushed or it

Copyright National Electrical Manufacturers Association
Provided by IHS under license with NEMA
No reproduction or networking permitted without license from IHS
Not for Resale

has entered the enclosure completely. This test is passed if an inspection determines the probing wire either has not entered the enclosure, or if visible, the probing wire is restricted by a barrier from intrusion into the interior.

4.3.5 Deflection tests

The deflection test shall be applied to all sides and walls of the enclosure. This test is passed if the specific force (see Table 1) applied perpendicularly to the surface of the enclosure does not impair the dielectric, mechanical, or corrosion performance of the equipment.

4.3.6 Operation test

Following all of the above tests, the enclosure shall be easily unlocked and opened and shall be easily closed and locked.

4.4 Test values

The minimum test values for which entry shall be prevented are provided in Table 1.

5 Enclosure design and coating system requirements

5.1 Enclosure design requirements objective

The objective of this section is to describe the design and performance requirements for carbon steel pad-mounted enclosures not situated in severe environments. Other performance requirements may be needed to provide long field life in other environments.

5.1.1 Accessibility

The enclosure shall be designed such that all exterior surfaces are accessible for proper surface preparation and the application of a uniform amount of the coating materials. Additionally, all exterior surfaces of the enclosure are to be accessible for the purposes of inspection and maintenance of the enclosure over the life of the equipment.

5.1.2 Contaminate accumulation

The enclosure shall be designed to shed water and minimize areas where corrosive elements can accumulate.

5.1.3 Welds—surface preparation

All welds shall be treated to prepare the weld area and the heat affected zones for coating. Weld spatter shall be removed. All welds are to be made in accordance with appropriate industrial welding standards.

5.2 Coating system requirements

5.2.1 General

All coated surfaces on the exterior or interior of the enclosure that may be exposed to the atmosphere shall be capable of meeting the performance tests required by this standard.

5.2.2 Specifications of coating characteristics

If more than one coating system is used for different areas of the enclosure, the areas in which each is used shall be identified. The laboratory test performance data of each coating system shall be identified.

Copyright National Electrical Manufacturers Association
Provided by IHS under license with NEMA
No reproduction or networking permitted without license from IHS
Not for Resale

The laboratory test performance data of each coating system shall be submitted for approval upon request. This data shall be resubmitted whenever there are changes in the method and/or materials.

5.2.3 Coating touch-up prior to shipment

Touch-up, when required, shall be done at final inspection before any equipment is shipped. In areas where the integrity of the coating system is violated, the touch-up system shall blend smoothly and meet all performance criteria of the original coating system.

5.2.4 Enclosure color

Unless otherwise specified, the topcoat color shall be Munsell 7GY 3.29/1.5 padmount green.

5.3 Coating system test specimens

Test specimens shall consist of panels of the same material composition used in production. Test specimens shall be in accordance with Figures 5, 6, 7, and 8 as to size and type. Quantity and type of panels in each test is identified under the specific test. All panels shall be cleaned, coated, and cured using the production coating system. Coated test panels shall be conditioned at room temperature and humidity for a minimum of 7 days prior to any testing.

5.4 Coating system performance requirements

5.4.1 Salt spray test

Three (3) coated panels, per Figure 5, shall be scribed per ASTM D1654 and tested for 1500 hours in a 5% salt spray in accordance with ASTM B117. The scribe shall be prepared for evaluating using ASTM 1654, procedure A, method 2. The scribe shall be divided into 1/4 inch zones and the worst spot in each zone will be evaluated (except the first 1/4 inch of the scribe at each end of the scribe line). The average of the 14 readings shall be rated per ASTM D1654-92, Table 1. After a rating has been set for each of the three panels, the average rating of the three (3) panels shall not be less than a 6 rating. The area away from the scribe shall have no blisters.

5.4.2 Cross hatch adhesion test

One (1) coated panel, per Figure 6, shall be scribed to bare metal in accordance with ASTM D3359. Method A shall be used for films thicker than 5 mils. Method B shall be used for films less than or equal to 5 mils. There shall be 100% adhesion to the substrate and between layers. A rating of 5A for Method A and 5B for Method B per ASTM D3359 is required.

5.4.3 Humidity test

Two (2) coated panels, per Figure 5, shall be tested for 1000 hours in accordance with ASTM D4485 except that the test shall be conducted at 45° C ± 1° C (113° F ± 2° F). Upon completion of the test, panels shall be evaluated for:

a) Blistering—There shall be no blistering observed on the surface of the panel when inspected within 15 minutes after removal from the cabinet.
b) Softening—After removal from the cabinet, allow the panels to air dry at room temperature for 24 ± 1 hours. There shall be no more than one (1) pencil hardness change when tested per ASTM D3363. Any color change shall be noted.

Copyright National Electrical Manufacturers Association
Provided by IHS under license with NEMA
No reproduction or networking permitted without license from IHS
Not for Resale

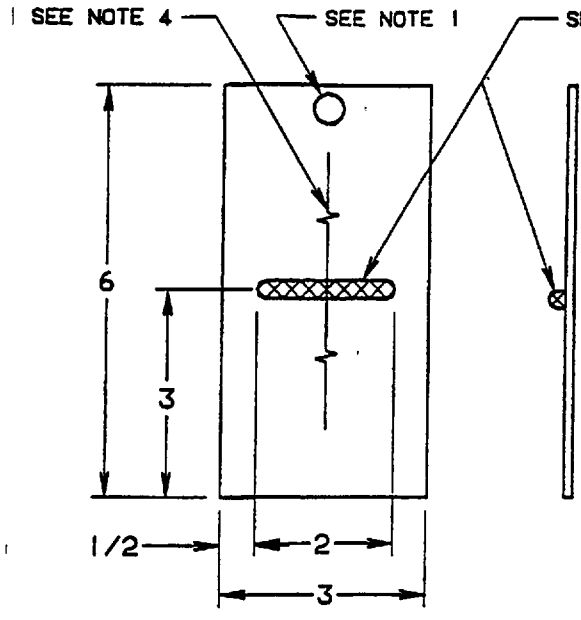

FIG 5

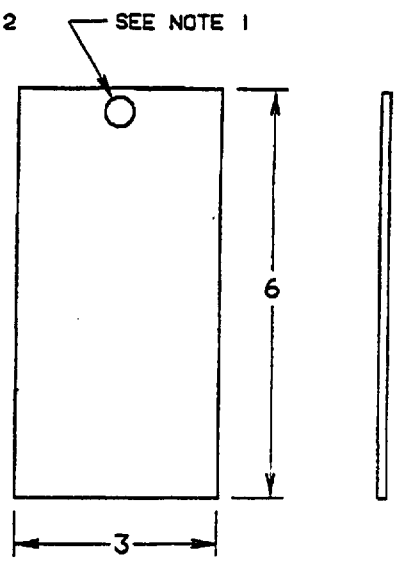

FIG 6

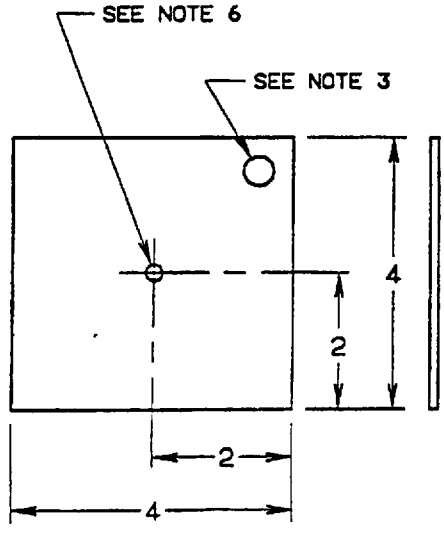

FIG 7

NOTES:

1. HOLE CAN BE PLACED IN PANEL FOR HANGING FOR PAINT OPERATIONS IF REQUIRED. LOCATE CENTERED ON SHORT DIMENSION AND 1/8" TO EDGE OF HOLE ON LONG DIMENSION. RECOMMENDED MAXIMUM HOLE SIZE 9/16" DIAMETER.
2. WELD BEAD TO BE THE TYPE METAL COMPOSITION AS THE PANEL. WELD BEAD TO BE 1/4" WIDE AND 1/4" HIGH.
3. HOLE CAN BE PLACED IN PANEL FOR HANGING, TO BE LOCATED IN ONE CORNER. RECOMMENDED MAXIMUM HOLE SIZE 9/16" DIAMETER.
4. SCRIBE PER ASTM D1654 ACROSS WELD APPROXIMATELY 4" SCRIBE LENGTH.
5. PANEL THICKNESS TO BE OF TYPICAL PRODUCTION STOCK USED IN THE MANUFACTURE OF DEVICES TEST IS INTENDED FOR.
6. 1/4" DIA. HOLE MAY REQUIRE REAMING TO FIT TABER ABRADER POST.

Figures 5, 6 and 7

Copyright National Electrical Manufacturers Association
Provided by IHS under license with NEMA
No reproduction or networking permitted without license from IHS
Not for Resale

5.4.4 Impact test

One (1) coated panel, prepared per Figure 6, shall be impacted at room temperature on a concrete floor per ASTM D2794 at a value of 80 inch pounds. The impacted test panel shall be exposed to 24 hours of salt spray exposure per ASTM B117. There shall be no red rust visible in the impact (intrusion) area of the panel.

5.4.5 Insulating fluid resistance test (for liquid filled units only)

Partially immerse one (1) coated panel, per Figure 6, in the insulating liquid for 72 hours at 100° C, 212° F–221° F). On the immersed portion of the panel, there shall be no loss of adhesion (per ASTM D3359), no blisters, no streaking, and no more than one (1) pencil harness change when tested in accordance with ASTM D3363, using either method. Any color change shall be noted.

5.4.6 Ultraviolet accelerated weathering test

The following test is required only for coated surfaces on the exterior of the enclosure. Expose two (2) test panels, per Figure 6, for 500 hours in accordance with ASTM G53, utilizing the Fs-40 bulb, with a cycle of four hours ultraviolet at 60° C (140° F), followed by four hours condensation at 50° C (122° F). Loss of gloss shall not exceed 50% of original gloss as measured per ASTM D523. The coating shall not exhibit cracking or crazing under unaided visual inspection.

5.4.7 Ultraviolet accelerated weathering (QUV) and simulated corrosive atmospheric breaking (SCAB)

The following test is required only for coated surfaces on the exterior of the enclosure. Three (3) coated panels, per Figure 5, shall be prepared and tested in accordance with the procedure described in Appendix 1. The scribe shall be prepared for evaluation using ASTM 1654, procedure A, method 2. Upon completion of 15 cycles of SCAB, the scribe shall be divided into 1/4 inch zones and the worst spot in each zone will be evaluated by measuring the amount of creepage along the scribe line (except the first 1/4" of the scribe at each end of the scribe line). The average of the 14 readings shall be rated per ASTM D1654, Table 1. After a rating has been set for each of the three panels, the average rating of the three (3) panels shall not be less than a six rating. The area away from the scribe shall have no blisters.

5.4.8 Abrasion resistance tabor abrader

The following test is required only for coated surfaces on the exterior of the enclosure. One (1) coated panel, per Figure 7, having a minimum dry film thickness of total coating system, shall be tested using a CS-10 wheel and 1000 gram weight in accordance with ASTM D4060. A total number of 3000 cycles shall be run with the wheels resurfaced before testing and after each 500 cycle run. The abraded panel shall be exposed to 24 hours of salt spray per ASTM B117. There shall be no red rust.

5.4.9 Gravelometer test

The following test is required only for coated surfaces on the exterior of the enclosure. Two (2) coated panels, per Figure 8, are to be tested per ASTM D3170 at room temperature using 60 psi air pressure. Expose the test panels for 24 hours in salt spray per ASTM B117. Remove from salt spray, rinse, and dry panels. Evaluate panels per SAE J400 for quantity and size of rusted chipped areas. Minimum rating shall be 4B per SAE J400.

Copyright National Electrical Manufacturers Association
Provided by IHS under license with NEMA
No reproduction or networking permitted without license from IHS
Not for Resale

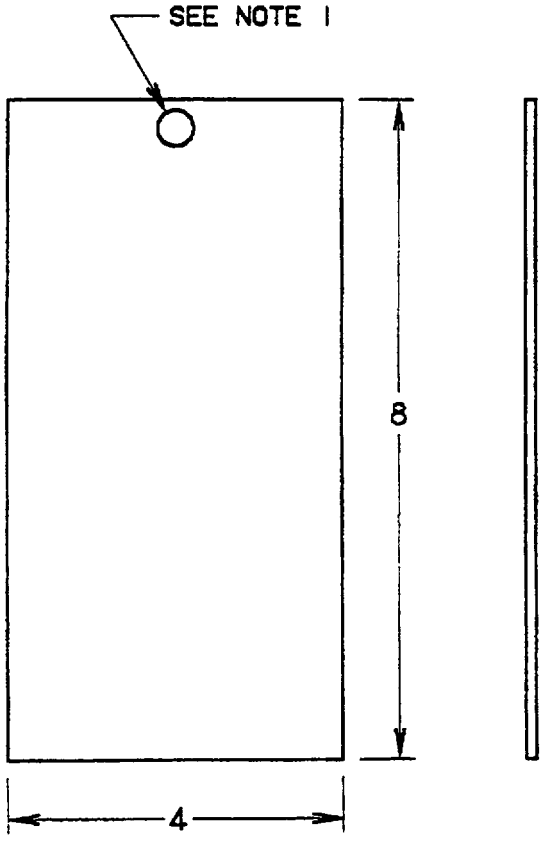

FIG 8

NOTES:

1. HOLE CAN BE PLACED IN PANEL FOR HANGING FOR PAINT OPERATIONS IF REQUIRED. LOCATE CENTERED ON SHORT DIMENSION AND 1/8" TO EDGE OF HOLE ON LONG DIMENSION. RECOMMENDED MAXIMUM HOLE SIZE 9/16" DIAMETER

2. PANEL THICKNESS TO BE OF TYPICAL PRODUCTION STOCK USED IN THE MANUFACTURE OF DEVICES TEST IS INTENDED FOR.

Figure 8

Copyright National Electrical Manufacturers Association
Provided by IHS under license with NEMA
No reproduction or networking permitted without license from IHS
Not for Resale

6 Labels

6.1 Purpose

Labeling can be an important aspect of pad-mounted enclosure integrity. Labeling can alert or inform an individual of potential hazard. Pad-mounted enclosures should be designed to achieve a high degree of integrity. When labels are attached to pad-mounted enclosures, they should be located as near the hazard as practicable. Labels should be concise and simple to understand, and should accurately communicate the type and degree of hazard.

6.2 Application

The application of any labels, whether intended for interior or exterior use, shall be subject to an agreement between the purchaser and the manufacturer.

7 General

7.1 Shipment

The manufacturer shall provide a method of shipment that will allow the enclosure to be received by the purchaser such that it still meets the performance tests required by this standard.

7.2 Coating repair procedure

A coating system repair procedure shall be recommended by the manufacturer.

Copyright National Electrical Manufacturers Association
Provided by IHS under license with NEMA
No reproduction or networking permitted without license from IHS
Not for Resale

Appendix 1

Ultraviolet accelerated weathering (QUV) and simulated corrosive atmospheric breakdown (SCAB) procedure

a) The three (3) panels prepared per 5.3 and evaluated per 5.4.7, are to be tested per ASTM G53 (Ultraviolet Accelerated Weathering) for 504 hours. Test equipment with FS-40 bulbs and the cycle set for four hours ultraviolet at 60° C ± 2° C (140° F ± 4° F), followed by four hours condensation at 50° C ± 2° C (122° F ± 4° F) is to be used. No evaluation is necessary after test as this is a conditioning step.

b) Scribe the panels in accordance with ASTM D1654 and as shown in Figure 1.

c) Place the test panel (scribed side facing up) in a plastic or wood rack with the scribe line in a vertical position. The rack shall hold the panels at a 15 degree (± 5 degree) angle from the vertical. Multiple panels in the test rack should not touch one another.

d) Expose the panels for the specified number of cycles. (One weekday equals one cycle.)

1) Mondays only

a. 1 hour in oven at 60° C ± 2° C (140° F ± 4° F).
b. 30 minutes in freezer at -23° C ± 2° C (-10° F ± 4° F). Panel should be transferred into freezer within one minute after removal from the oven.
c. Remove the panels from the freezer and immerse in a 5% NaCl solution for 15 minutes. The NaCl solution should be at room temperature. The panel transfer time from the freezer to the NaCl immersion should be less than one minute.
d. Removal from NaCl bath and let hang in room temperature and humidity atmosphere for one hour, 15 minutes.
e. Place panel in 60° C ± 2° C (140° F ± 4° F) and 85% ± 3% relative humidity cabinet for 21 hours

2) Tuesday through Friday

a. Test panels to be immersed in 5% NaCl solution for 15 minutes. The NaCl solution should be at room temperature.
b. Allow the test panels to age at room temperature and humidity for one hour, 15 minutes.
c. Place the test panels in 60° C ± 2° C (140° F ± 4° F) and 85% ± 3% relative humidity cabinet for 22 hours, 30 minutes.

3) Saturdays and Sundays

a. Leave the test panel in the humidity cabinet at 60° C ± 24° C (140° F ± 4° F) and 85% relative humidity.

4) Monday (Last Day)

a. Remove the test panels from the humidity cabinet and evaluate per 5.4.7.

Copyright National Electrical Manufacturers Association
Provided by IHS under license with NEMA
No reproduction or networking permitted without license from IHS
Not for Resale