AMERICAN NATIONAL STANDARD

American National Standard

ANSI C57.12.25-1990

American National Standard

Pad-Mounted, Compartmental Type, Self-Cooled, Single Phase Distribution Transformers with Separable Insulated High Voltage Connectors, High Voltage 34500 Grd Y/19920 Volts and Below; Low Voltage, 240/120; 167 kVA and Smaller, Requirements for

NATIONAL ELECTRICAL MANUFACTURERS ASSOCIATION
1300 NORTH 17TH STREET, SUITE 1847, ROSSLYN, VA 22209
(703) 841-3200 FAX: (703) 841-3300

Copyright National Electrical Manufacturers Association
Provided by IHS under license with NEMA
No reproduction or networking permitted without license from IHS
Not for Resale

American National Standard

Approval of an American National Standard requires verification by ANSI that the requirements for due process, consensus, and other criteria for approval have been met by the standards developer.

Consensus is established when, in the judgment of the ANSI Board of Standards Review, substantial agreement has been reached by directly and materially affected interests. Substantial agreement means much more than a simple majority, but not necessarily unanimity. Consensus requires that all views and objections be considered, and that a concerted effort be made toward their resolution.

The use of American National Standards is completely voluntary; their existence does not in any respect preclude anyone, whether he has approved the standards or not, from manufacturing, marketing, purchasing, or using products, processes, or procedures not conforming to the standards.

The American National Standards Institute does not develop standards and will in no circumstances give an interpretation of any American National Standard. Moreover, no person shall have the right or authority to issue an interpretation of an American National Standard in the name of the American National Standards Institute. Requests for interpretations shall be addressed to the secretariat or sponsor whose name appears on the title page of this standard.

CAUTION NOTICE: This American National Standard may be revised or withdrawn at any time. The procedures of the American National Standards Institute require that action be taken to reaffirm, revise, or withdraw this standard no later than five years from the date of approval. Purchasers of American National Standards may receive current information on all standards by calling or writing the American National Standards Institute.

Published by

National Electrical Manufacturers Association
1300 N. 17th Street, Rosslyn, Virginia 22209

Copyright © 1990 National Electrical Manufacturers Association
All rights reserved.

No part of this publication may be reproduced in any form, in an electronic retrieval system or otherwise, without prior written permission of the publisher.

Printed in the United States of America

Copyright National Electrical Manufacturers Association
Provided by IHS under license with NEMA
No reproduction or networking permitted without license from IHS

Not for Resale

ANSI ®
C57.12.25-1990
Revision of
ANSI C57.12.25-1981

American National Standard
for Transformers –

Pad-Mounted, Compartmental-Type, Self-Cooled, Single-Phase Distribution Transformers with Separable Insulated High-Voltage Connectors; High Voltage, 34 500 GrdY/ 19 920 Volts and Below; Low Voltage, 240/120 Volts; 167 kVA and Smaller – Requirements

Secretariat
National Electrical Manufacturers Association

Approved May 11, 1990
American National Standards Institute, Inc

Copyright National Electrical Manufacturers Association
Provided by IHS under license with NEMA
No reproduction or networking permitted without license from IHS
Not for Resale

Contents

Page

Foreword iii

1 Scope 1

2 Normative references 1

3 Ratings 2

4 Basic lightning impulse insulation levels and dielectric test levels 2

5 Tests 2

6 Construction 2

7 Storage and installation 12

8 Other requirements that may be specified for some applications 12

Table 1 Transformer and connector high-voltage ratings and electrical characteristics 7

Figures

1 Interchangeability dimensions – Type-1 arrangement 3

2 Interchangeability dimensions – Type-2 arrangement 5

3 Captive and recessed pentahead and hex-head bolts 9

4 Low-voltage terminals 10

Copyright National Electrical Manufacturers Association
Provided by IHS under license with NEMA
No reproduction or networking permitted without license from IHS
Not for Resale

Foreword (This Foreword is not part of American National Standard C57.12.25-1990.)

Accredited Standards Committee on Transformers, Regulators, and Reactors, C57, has for many years been developing and correlating standards on transformers and regulators. The data used in this work have been gathered from many sources, including the standards of the Institute of Electrical and Electronics Engineers and the National Electrical Manufacturers Association, reports of committees of the Edison Electric Institute, and others.

This standard was prepared by the Subcommittee on Distribution Transformers, Overhead and Pad-Mounted, C57.12.2.

Suggestions for improvement of this standard will be welcome. They should be sent to the National Electrical Manufacturers Association, 2101 L Street, NW, Washington, DC 20037.

This standard was processed and approved for submittal to ANSI by the Accredited Standards Committee on Transformers, Regulators, and Reactors, C57. Committee approval of this standard does not necessarily imply that all committee members voted for its approval. At the time it approved this standard, the C57 Committee had the following members:

(Vacant), Chairman
(Vacant), Vice-Chairman
C. H. White, Secretary

Organization Represented	*Name of Representative*
Electric Light and Power Group	W. Cole
	G. Gunnels
	P. Orehek
	A. Velazquez
	D. Soffrin (Alt.)
	J. Sullivan (Alt.)
Institute of Electrical and Electronics Engineers	J. Bonnucchi
	O. Compton
	J. Dutton
	L. McCormick
	W. Neiswender
	F. Huber, Jr. (Alt.)
	H. Smith (Alt.)
National Electrical Manufacturers Association	J. Douglas
	P. Hopkinson
	W. Kendall
	K. Linsley
	W. McNutt
	H. Robin
	R. Schew
	R. Uptegraff, Jr.
	N. Mohesky (Alt.)
	J. Nay (Alt.)
	D. Strang (Alt.)
Testing Laboratory Group	W. O'Grady
	R. Seelbach (Alt.)
Tennessee Valley Authority	L. Smith
U.S. Department of Agriculture – Rural Electrification Administration	J. Arnold, Jr.
U.S. Department of Energy	D. Torgenson
U.S. Department of the Interior	F. Cook, Sr.
U.S. Department of the Navy	H. Stickley

Copyright National Electrical Manufacturers Association
Provided by IHS under license with NEMA
No reproduction or networking permitted without license from IHS
Not for Resale

Subcommittee C57.12.2, on Distribution Transformers, Overhead and Pad-Mounted, which developed this standard, had the following members:

W. E. Cole, Chairman
C. H. White, Secretary

J. C. Arnold, Jr.
A. E. Bolin, Jr.
T. P. Copper
A. A. Ghafourian
M. E. Gruber
K. S. Hanus
J. Hunt
R. D. Jordan
J. P. Lazar
D. S. Lyon
J. H. Malloy, Jr.
P. A. Manos
J. R. Miller
R. P. Miller, Sr
N. L. Mohesky
G. A. Paiva
J. W. Sanders
R. W. Scheu
R. J. Stahara
F. Stevens
R. S. Sumrall
J. C. Thompson
A. M. Velazquez
A. L. Wilks
C. W. Williams, Jr.
L. E. Williams
J. L. Corkran (Alt.)
K. D. Edwards (Alt.)
T. N. Freeland (Alt.)
C. A. Larson (Alt.)
D. MacKintosh (Alt.)
R. J. Manes (Alt.)
M. C. Mingoia (Alt.)
D. W. Whitley (Alt.)

Copyright National Electrical Manufacturers Association
Provided by IHS under license with NEMA
No reproduction or networking permitted without license from IHS
Not for Resale

American National Standard
for Transformers –

Pad-Mounted, Compartmental-Type, Self-Cooled, Single-Phase Distribution Transformers with Separable Insulated High-Voltage Connectors; High Voltage, 34 500 GrdY/ 19 920 Volts and Below; Low Voltage, 240/120 Volts; 167 kVA and Smaller – Requirements

1 Scope

1.1 This standard is intended for use as a basis for determining performance, interchangeability, and safety of the equipment covered, and to assist in the proper selection of such equipment.

1.2 This standard covers certain electrical, dimensional, and mechanical characteristics, and takes into consideration certain safety features of single-phase, 60-Hz, mineral-oil-immersed, self-cooled, pad-mounted, compartmental-type distribution transformers with separable insulated high-voltage connectors. These transformers are rated 167 kVA and smaller, with high voltages of 34 500 GrdY/ 19 920 volts and below for operation between one phase and grounded neutral, and low voltages of 240/120 volts. These transformers are generally used for step-down purposes from an underground primary cable supply.

NOTE – Refer to latest federal regulations concerning PCB contamination in transformers.

1.3 This standard covers two connector and terminal arrangements for loop feed systems. Either Type 1 (see Figure 1) or Type 2 (see Figure 2) arrangements shall be specified.

1.4 This standard does not cover the electrical and mechanical requirements of any accessory devices that may be supplied with the transformer.

2 Normative references

2.1 General

All characteristics, definitions, terminology, voltage designation, and tests, except as otherwise specified herein, shall be in accordance with the following American National Standards. The following standards contain provisions which, through reference in this text, constitute provisions of this American National Standard. At the time of publication, the editions indicated were valid. All standards are subject to revision, and parties to agreements based on this American National Standard are encouraged to investigate the possibility of applying the most recent editions of the standards indicated below.

ANSI C57.12.20-1988, Transformers – Overhead-Type Distribution Transformers, 500 kVA and Smaller: High Voltage, 34 500 Volts and Below; Low Voltage, 7970/13 800Y Volts and Below

ANSI C57.12.28-1988, Switchgear and Transformers – Pad-Mounted Equipment – Enclosure Integrity

ANSI C57.12.70-1978 (R1986) Terminal Markings and Connections for Distribution and Power Transformers

ANSI/IEEE C57.12.00-1987, General Requirements for Liquid-Immersed Distribution, Power, and Regulating Transformers

Copyright National Electrical Manufacturers Association
Provided by IHS under license with NEMA
No reproduction or networking permitted without license from IHS
Not for Resale

ANSI/IEEE C57.12.80-1978 (R1986) Terminology for Power and Distribution Transformers

ANSI/IEEE C57.12.90-1987, Test Code for Liquid-Immersed Distribution, Power, and Regulating Transformers and Guide for Short-Circuit Testing of Distribution and Power Transformers

ANSI/IEEE C57.91-1981, Guide for Loading Mineral-Oil-Immersed Overhead and Pad-Mounted Distribution Transformers Rated 500 kVA and Less with 65°C or 55°C Average Winding Rise

ANSI/IEEE 386-1985, Separable Insulated Connector Systems for Power Distribution Systems above 600 V

3 Ratings

3.1 Kilovolt-ampere ratings

Kilovolt-ampere ratings are continuous and based on not exceeding either a 65°C average winding temperature rise or an 80°C hot-spot conductor temperature rise. The temperature rise of the insulating oil shall not exceed 65°C when measured near the top of the tank. These kilovolt-ampere ratings are based on the usual temperature and altitude service conditions specified in ANSI/IEEE C57.12.00-1987. The kilovolt-ampere ratings shall be as follows:

25	75
37.5	100
50	167

3.2 Voltage ratings and tap ratings

3.2.1 Voltage ratings shall be in accordance with Table 1 and 6.2.1. For series-multiple transformers, the voltage change shall be made with a switch handle located in the high-voltage portion of the terminating compartment. The handle shall be designed to prevent accidental operation by requiring a preliminary step before the voltage setting can be changed. Actual voltages or position numbers corresponding to the nameplate shall be clearly identifiable near the handle. There shall be located on or adjacent to the operating mechanism a caution to de-energize the transformer before operating.

3.2.2 High-voltage windings designed for series-multiple operation shall be connected for the series voltage prior to shipment.

3.2.3 No taps shall be provided.

4 Basic lightning impulse insulation levels and dielectric test levels

4.1 Basic lightning impulse insulation levels (BILs) shall be in accordance with Table 1 and 6.2.1.

4.2 Dielectric test levels shall be in accordance with the distribution levels in Table 4 of ANSI/IEEE C57.12.00-1987.

5 Tests

5.1 General

Except as specified in 5.2, tests shall be performed as specified in ANSI/IEEE C57.12.00-1987 and ANSI/IEEE C57.12.90-1987.

5.2 Dielectric tests

No applied voltage test is required on the high-voltage winding. Induced voltage tests shall be performed by applying between the terminals of one winding a voltage that will develop from the high-voltage line terminals to ground a voltage of 1000 volts plus 3.46 times the rated transformer winding voltage, but in no case shall the line-to-ground voltage developed exceed 40 000 volts for 125 kV BIL and 50 000 volts for 150 kV BIL. For this test, the neutral terminal shall be grounded.

6 Construction

6.1 General

A pad-mounted compartmental-type transformer shall conform to ANSI C57.12.28-1988 and consist of the tank with a high-voltage and low-voltage cable terminating compartment, as shown in Figures 1 and 2.

6.1.1 The high-voltage and low-voltage portions of the compartment shall be located side-by-side on one side of the transformer tank. When viewed from the front, the low-voltage portion shall be on the right.

Copyright National Electrical Manufacturers Association
Provided by IHS under license with NEMA
No reproduction or networking permitted without license from IHS
Not for Resale

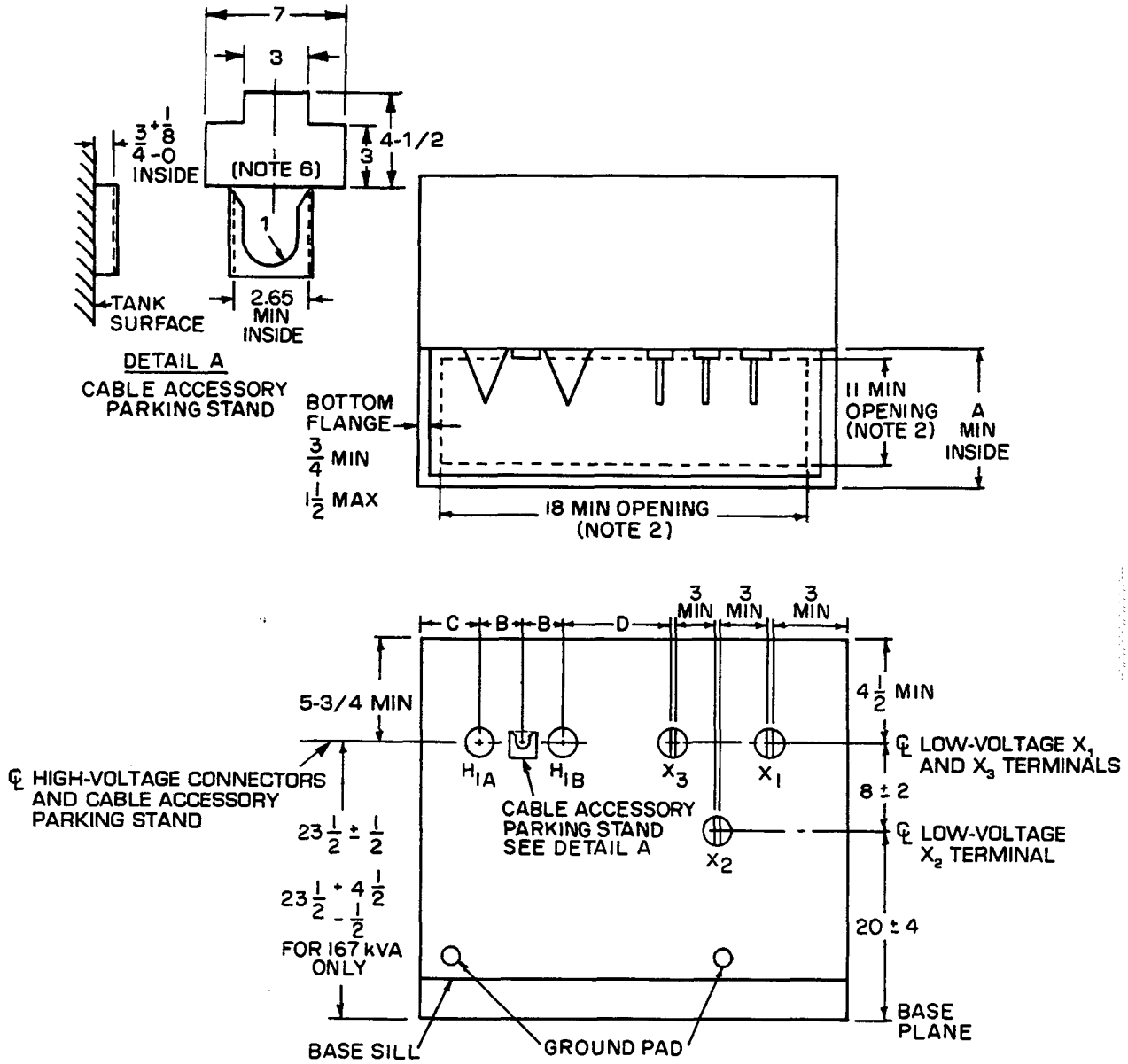

(a)

Separable insulated connector high-voltage rating kV	Figure	A min	B min	C min	D min
8.3 and 8.3/14.4	1(a)	13	5	3-1/4	4-1/2
15.2 and 15.2/26.3	1(a)	16	6	3-1/4	4-1/2
21.1 and 21.1/36.6	1(a)	16	6	4	6
21.1 and 21.1/36.6 (when specified; see Note 7)	1(b)	19	5	4	6

Figure 1 – Interchangeability dimensions – Type-1 arrangement

Copyright National Electrical Manufacturers Association
Provided by IHS under license with NEMA
No reproduction or networking permitted without license from IHS
Not for Resale

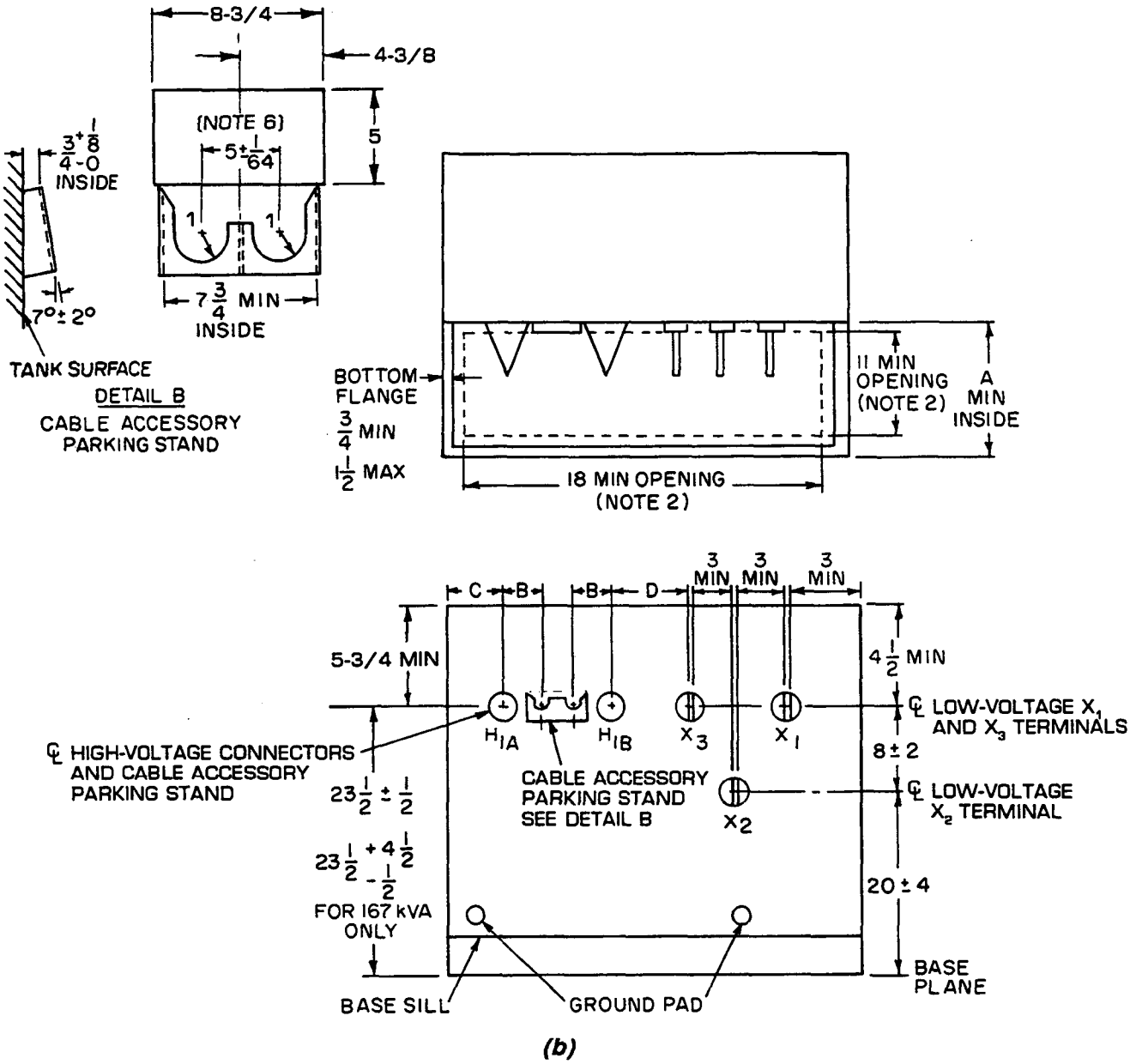

(b)

NOTES

1 All dimensions are in inches unless otherwise specified.

2 This minimum opening in the bottom of the compartment is provided for cable entrance.

3 When a loop feed is not required, omit one high-voltage connector.

4 The low-voltage is shown for additive polarity transformers. The location of X_1 and X_3 is reversed for subtractive polarity.

5 The location of H_{1A} and H_{1B} shall be such that the separable connectors can be operated with the base still in place.

6 Minimum clear space, excluding area required for H_{1A} and H_{1B}, required for installing accessory devices in parking stand.

7 These dimensions are required for certain separable insulated connectors.

Figure 1 (*continued*)

Copyright National Electrical Manufacturers Association
Provided by IHS under license with NEMA
No reproduction or networking permitted without license from IHS
Not for Resale

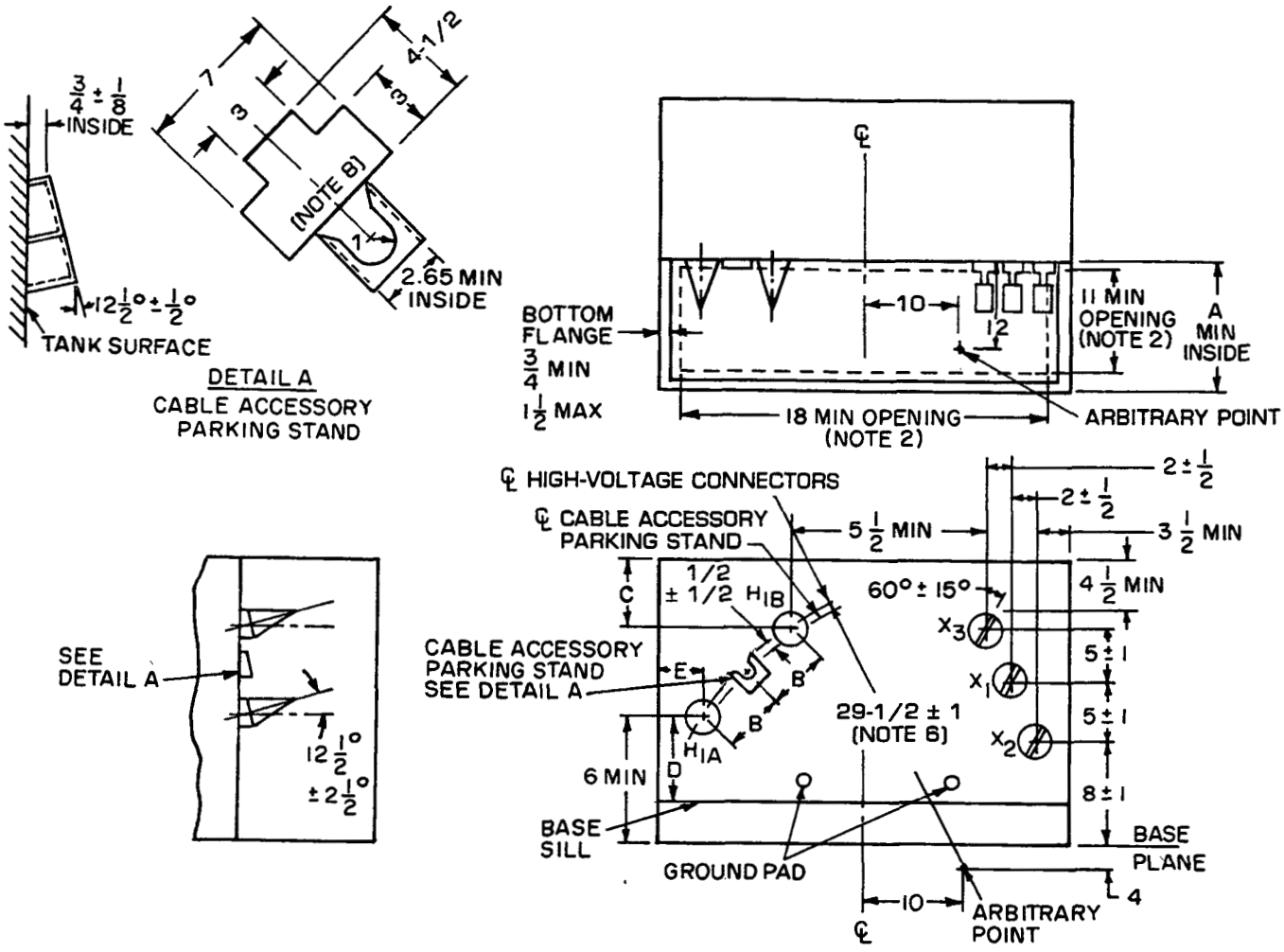

(a)

Separable insulated connector high-voltage rating kV	Figure	A min	B min	C min	D min	E min
8.3 and 8.3/14.4	2(a)	13	5	4	0	3-1/4
15.2 and 15.2/26.3	2(a)	16	6	5-3/4	0	3-1/4
21.1 and 21.1/36.6	2(a)	16	6	5-3/4	0	4
21.1 and 21.1/36.6 (when specified; see Note 9)	2(b)	19	5	6-3/4	3	4

Figure 2 – Interchangeability dimensions – Type-2 arrangement

Copyright National Electrical Manufacturers Association
Provided by IHS under license with NEMA
No reproduction or networking permitted without license from IHS
Not for Resale

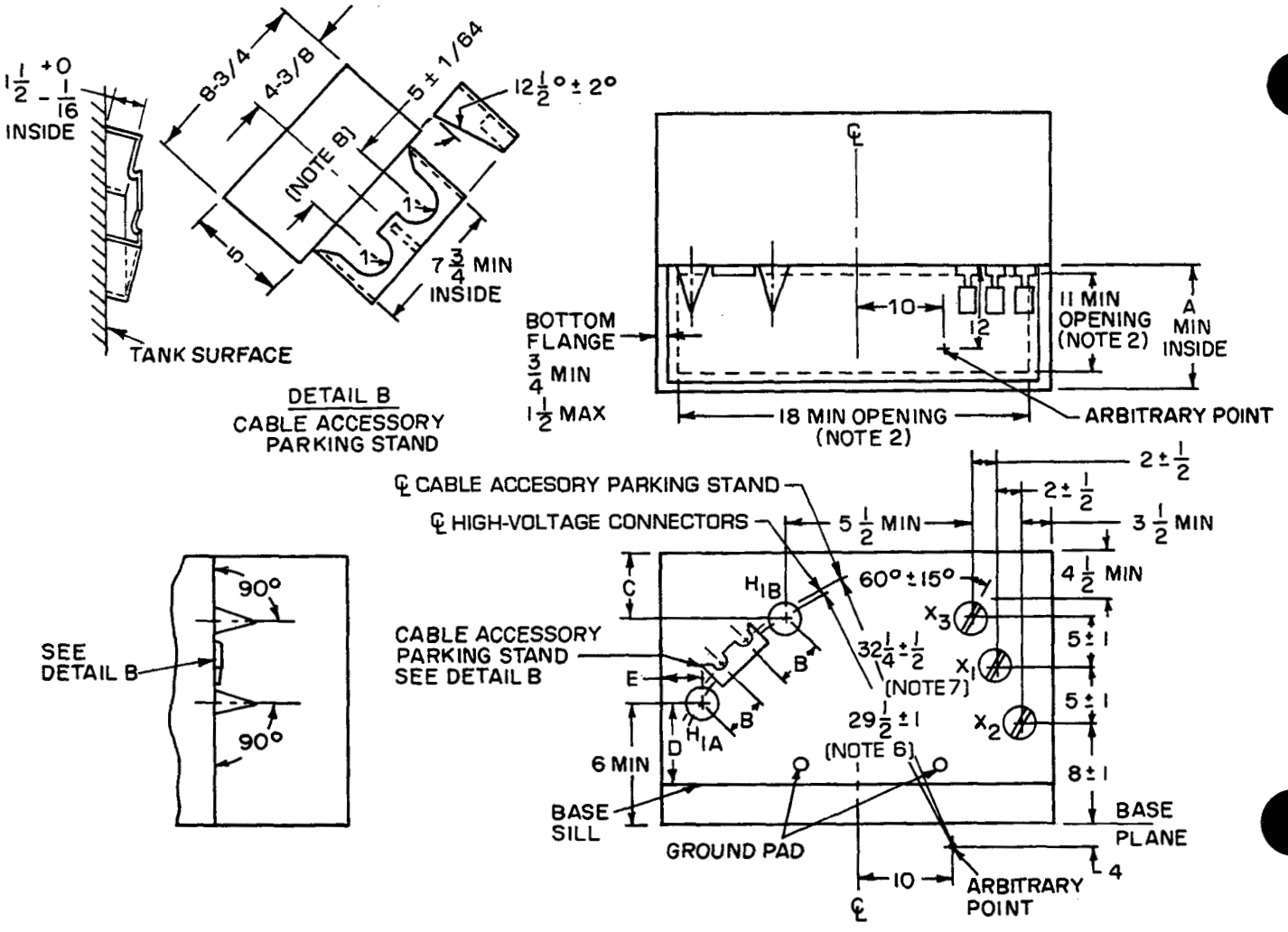

(b)

NOTES

1 All dimensions are in inches unless otherwise specified.

2 This minimum opening in the bottom of the compartment is provided for cable entrance.

3 When loop feed is not required, omit one high-voltage connector.

4 The low-voltage is shown for additive polarity transformers. The location of X_1 and X_3 is reversed for subtractive polarity.

5 The location of H_{1A} shall be such that the separable connector can be operated with the base still in place.

6 Radius of the arc through the centerline of the high-voltage connectors H_{1A} and H_{1B} with its origin at the arbitrary point.

7 Radius of the arc through the centerline of the cable accessory parking stand, shown in detail B, with its origin at the arbitrary point, Figure 2(b).

8 Minimum clear space, excluding area required for H_{1A} and H_{1B}, required for installing accessory devices in parking stand.

9 These dimensions are required for certain separable insulated connectors.

Figure 2 (*continued*)

Copyright National Electrical Manufacturers Association
Provided by IHS under license with NEMA
No reproduction or networking permitted without license from IHS
Not for Resale

Copyright National Electrical Manufacturers Association
Provided by IHS under license with NEMA
No reproduction or networking permitted without license from IHS
Not for Resale

Table 1 – Transformer and connector high-voltage ratings and electrical characteristics

Transformer		Electrical characteristics of the completely assembled high-voltage connectors[1]			
		High-Voltage Rating[2]			
High-voltage ratings volts	Minimum BIL[3] kV	Phase-to-ground kV	Phase-to-ground/phase-to-phase kV	BIL kV	60-Hz dry one minute withstand kV
Single High-Voltage					
4 160 GrdY/2 400	60	8.3	8.3/14.4	95	34
8 320 GrdY/4 800	75	8.3	8.3/14.4	95	34
12 000 GrdY/6 930	95	8.3	8.3/14.4	95	34
12 470 GrdY/7 200	95	8.3	8.3/14.4	95	34
13 200 GrdY/7 620	95	8.3	8.3/14.4	95	34
13 800 GrdY/7 970	95	8.3	8.3/14.4	95	34
16 340 GrdY/9 430	95	(8.3 or 15.2)[4]	(8.3/14.4 or 15.2/26.3) [4]	(95 or 125)[4]	(34 or 40)[4]
22 860 GrdY/13 200	125	15.2	15.2/26.3	125	40
23 900 GrdY/13 800	125	15.2	15.2/26.3	125	40
24 940 GrdY/14 400	125	15.2	15.2/26.3	125	40
34 500 GrdY/19 920	150	21.1	21.1/36.6	150	50
Series – Multiple High-Voltage					
4 160 GrdY/2 400 × 12 470 GrdY/7 200	60 × 95	8.3	8.3/14.4	95	34
4 160 GrdY/2 400 × 13 200 GrdY/7 600	60 × 95	8.3	8.3/14.4	95	34
8 320 GrdY/4 800 × 24 940 GrdY/14 400	75 × 125	15.2	15.2/26.3	125	40
12 470 GrdY/7 200 × 24 940 GrdY/14 400	95 × 125	15.2	15.2/26.3	125	40
13 200 GrdY/7 620 × 24 940 GrdY/14 400	95 × 125	15.2	15.2/26.3	125	40

1) For complete connector rating, see ANSI/IEEE 386-1985.
2) Transformers are suitable for connectors with phase-to-ground or phase-to-ground/phase-to-phase high-voltage ratings as listed.
3) Arrester coordination may require higher BIL on multiple connection than indicated to achieve a minimum protection level of 20%.
4) The required connector rating is to be specified.

6.1.2 Access to the termination compartment shall be provided by a single door or by individual compartment doors. If individual compartment doors are provided, they shall be so constructed as to provide access to the high-voltage portion of the compartment only after the door to the low-voltage portion of the compartment has been opened. There shall be one or more additional captive fastening devices that must be disengaged before the high-voltage door can be opened. Where the low-voltage compartment door is of a flat panel design, or where only a single door is provided, the door shall have three-point latching with a handle provided for a locking device. If a lift-up hood or a single door provides access to both the high-voltage and low-voltage portions of the compartment, one-point latching with provision for a locking device shall be provided. (See Figure 3 for typical construction).

6.1.3 The bottom edges of the compartment shall be so constructed as to provide for the use of hold-down devices accessible only from inside the compartment.

6.1.4 The construction of the unit shall be such that it can be lifted, skidded, or slid, or any combination of these, into place on the mounting surface without disturbing the high-voltage or low-voltage cables.

6.1.5 The transformer shall be arranged for rolling in two directions; parallel to and at right angles to one side of the transformer.

6.1.6 The lifting provisions shall be arranged on the tank to provide a distributed balanced lift in a vertical direction for the completely assembled transformer and shall be designed to provide a safety factor of 5. The safety factor of 5 is the ratio of the ultimate stress of the material used to the working stress. The working stress is the maximum combined stress developed in the lifting provisions by the static load of the completely assembled transformer.

6.2 Connectors and terminals

6.2.1 The electrical characteristics of the completely assembled high-voltage connectors shall be as shown in Table 1. The electrical characteristics and clearance of the completely assembled low-voltage terminals shall be as follows:

Low-voltage rating	240/120 volts
BIL	30 kV
60-Hz dry 1-minute withstand voltage	10 kV
Minimum clearance of live parts to ground	1 inch

NOTE – The minimum clearance of live parts to ground should be increased wherever possible to allow the user ease in making connections.

6.2.2 The number, location, and arrangement of the high-voltage connectors and low-voltage terminals shall be as shown in Figures 1 or 2.

6.2.3 High-voltage separable insulated connectors shall be provided for connection to the distribution system. The high-voltage connectors shall consist of either bushing wells, bushing wells with bushing inserts, or integral bushings, as specified. A cable accessory parking stand shall be provided. For specific details concerning high-voltage separable connectors and cable accessory parking stands, refer to ANSI/IEEE 386-1985. Separable insulated high-voltage connectors that are designed for operation after the transformer is in place shall be located so that they can be operated with hot-line tools.

6.2.4 The H_2 end of the high-voltage winding shall be securely connected internally to the grounded clamping structure or to the tank. This connection shall be independent of all other electrical connections.

6.2.5 The low-voltage line and neutral terminals for Type-1 transformers (see Figure 1) shall be in accordance with Figure 4(a). Low-voltage line and neutral terminals for Type-2 transformers (see Figure 2) shall be in accordance with Figures 4(a), 4(b), or 4(c), as specified.

6.2.6 The low-voltage neutral shall be either a blade connected directly to the tank or a fully insulated terminal. If a fully insulated terminal is used, a ground pad shall be provided on the outer surface of the tank. One or more removable ground straps suitably sized for the short-circuit rating of the transformer, as defined in ANSI/IEEE C57.12.00-1987, shall be provided and connected between the low-voltage neutral terminal and the ground pad.

Copyright National Electrical Manufacturers Association
Provided by IHS under license with NEMA
No reproduction or networking permitted without license from IHS
Not for Resale

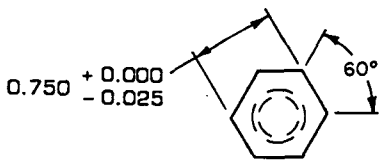

Hex Head

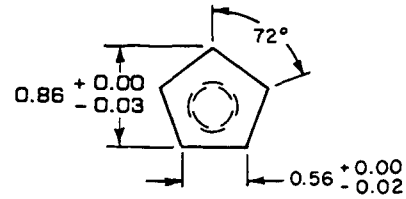

Pentahead

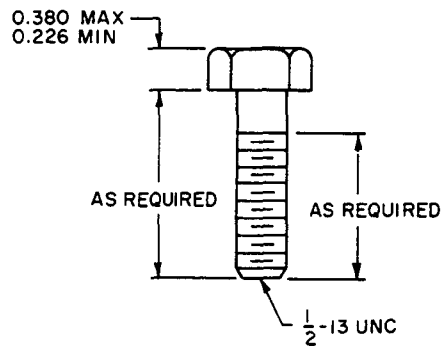

Side View of Bolt

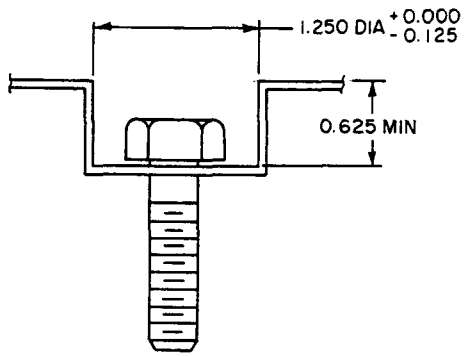

Cross Section of
Recessed Nonrotating Cup,
Preferred Method

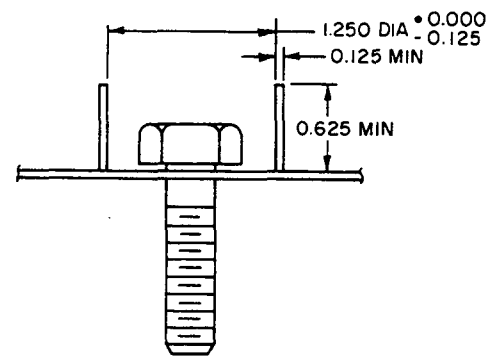

Cross Section of
Recessed Nonrotating Cup,
Alternate Method

NOTES

1 All dimensions are in inches unless otherwise specified.

2 The captive method is not shown.

Figure 3 – Captive and recessed pentahead and hex-head bolts

Copyright National Electrical Manufacturers Association
Provided by IHS under license with NEMA
No reproduction or networking permitted without license from IHS
Not for Resale

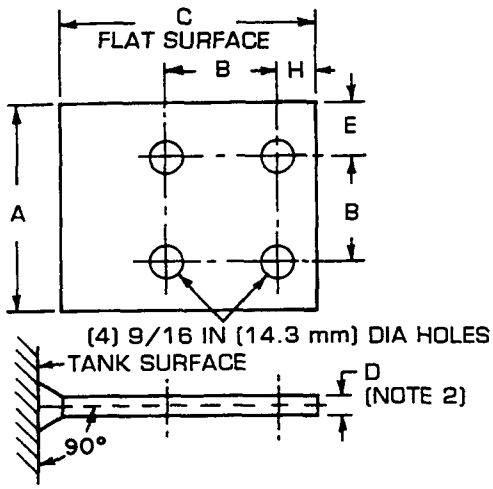

(a)

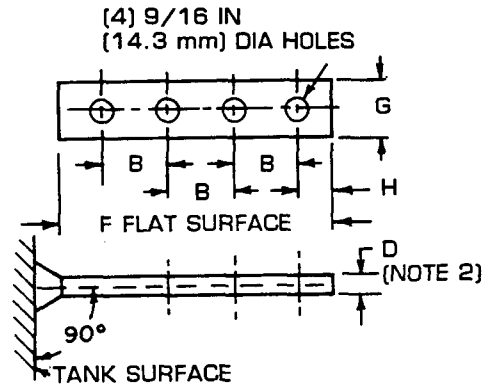

(b)

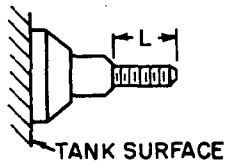

kVA rating	Thread size Note 3	Minimum L Note 3	
		in	mm
25-75	0.625-11 UNC-2A	1.25	31.9
100-167	1.000-14 UNC 2S	1.75	44.5

(c)

Dimensions Note 1	Inches	Millimeters
A	3-1/2	88.9
B	1-3/4	44.5
C	3-3/8 min	85.7 min
D	1/4 min	6.4 min
E	7/8	22.2
F	6-3/4 min	171.4 min
G	1-3/8 min	35.0 min
H	5/8	15.9

NOTES

1 All dimensions are nominal, except as noted.

2 Greater thickness may be required to provide adequate conductivity.

3 Larger thread size or length, or both, may be required if materials other than copper are used.

4 Corners and edges may be rounded for Figures 4(a) and 4(b).

Figure 4 – Low-voltage terminals

Copyright National Electrical Manufacturers Association
Provided by IHS under license with NEMA
No reproduction or networking permitted without license from IHS
Not for Resale

6.2.7 Connector and terminal designations shall be as defined in ANSI C57.12.70-1978. The high-voltage connector and low-voltage terminal designations and locations are shown in Figures 1 and 2.

The identification of the connector and terminal connections shall be as shown on the instruction nameplate.

6.3 High-voltage and low-voltage compartment

The compartment door or doors shall be of sufficient size to provide adequate operating and working space when removed or open. The doors shall either be equipped for latching in the open position or designed for manual removal.

6.4 Instruction nameplate

6.4.1 The instruction nameplate shall be located in the low-voltage portion of the compartment and shall be readable with the cables in place. When the nameplate is mounted on a removable part, the manufacturer's name and transformer serial number shall be permanently affixed to a nonremovable part.

6.4.2 The nameplate shall conform to Nameplate A, as described in ANSI/IEEE C57.12.00-1987, except the BIL rating shall be as shown for 34 500 GrdY/19 920 V units.

6.5 Oil preservation

6.5.1 The transformer shall be of sealed-tank construction. Sealed-tank construction is construction that seals the interior of the tank from the atmosphere and in which the gas volume plus the oil volume remains constant. The transformer shall remain effectively sealed for a top-oil temperature range of -5°C to +105°C continuous and under operating conditions as described in ANSI/IEEE C57.91-1981.

6.5.2 A replaceable valve shall be provided to relieve pressure in excess of pressure resulting from normal operation, which builds up slowly due to overloads, high ambient temperatures, external secondary faults, and internal incipient faults in the low-voltage winding, with emission of only a negligible amount of oil. The valve shall be furnished in the low-voltage portion of the terminating compartment on the tank wall above the 140°C top oil level, by the manufacturer's calculation, and shall be located so as not to interfere with use of the low-voltage terminals or the operating handle of the low-voltage circuit breaker. The inlet port shall be 1/4-inch or larger National Pipe Thread (NPT) (or National Fine (NF) thread with gasket), sized for specified minimum flow rate. Exposed parts shall be of weather- and corrosion-resistant materials. Gaskets and O-rings shall withstand oil vapor and 105°C temperature continuous under operating conditions, as described in ANSI/IEEE C57.91-1981, without seizing or deteriorating for the life of the transformer. The valve shall have a pull ring for manually reducing pressure to atmospheric using a standard hook-stick, and shall be capable of withstanding a static pull force of 25 pounds (11.34 kg) for 1 minute without permanent deformation. The valve shall withstand a static force of 100 pounds (45.36 kg) for 1 minute applied normal to its longitudinal axis at the outermost extremity of the body. When specified, the venting port, on the outward side of the valve head seat, shall be protected to prevent entry of dust, moisture, and insects before and after the valve has actuated; or a weather-cap-type indicator shall be provided, which will remain attached to the valve and provide positive indication to an observer that the valve has operated. Venting and sealing characteristics shall be as follows:

Cracking pressure	10 psig ± 2 psig
Resealing pressure	6 psig, minimum
Zero leakage from resealing pressure	To -8 psig
Flow at 15 psig	35 SCFM minimum (where SCFM is flow at cubic feet per minute, corrected for air pressure of 14.7 psi and air temperature of 21.1° C)

6.6 Tanks

6.6.1 The tank shall be of sufficient strength to withstand a pressure of 7 psig without permanent distortion; and 15 psig without rupturing or affecting cabinet security, as described in ANSI C57.12.28-1988. A 1/2-inch minimum

Copyright National Electrical Manufacturers Association
Provided by IHS under license with NEMA
No reproduction or networking permitted without license from IHS
Not for Resale

NPT upper plug (or cap) for filling and pressure testing shall be provided in the terminating compartment. A 1/2-inch minimum NPT drain plug (or cap) shall be provided in the terminating compartment. Suitable means for indicating the correct liquid level at 25°C shall be provided.

6.6.2 The cover shall be welded or bolted in place with adequate gasketing.

6.6.3 Where a bolted-on cover of any kind is used, the construction shall conform to 6.1.

6.6.4 Tank ground provisions shall consist of two steel pads, each with a 1/2-13 UNC tapped hole, 7/16-inch deep. These ground pads shall be welded on or near the transformer base, one in the high-voltage portion of the compartment and one in the low-voltage portion of the compartment, as shown in Figures 1 and 2. In cases in which the transformer tank and compartment are separate, they shall be electrically bonded.

6.7 Components for looped primary cable systems

The minimum current-carrying capabilities of components for looped primary cable systems shall be 200 amperes (continuous) and 10 000 amperes root mean square (rms) symmetrical for 0.17 seconds (short-time current rating) for transformers with or without high-voltage switching.

7 Storage and Installation

7.1 Storage

The transformer shall be stored in a vertical position and shall remain essentially in that position at all times, including when it is transported to the site and during its installation.

7.2 Installation

Equipment manufactured to this specification may be installed in areas where environmental and climatic conditions make operation at varying angles of tilt from the horizontal an important consideration. Under these circumstances, the user may wish to make a particular "angle of tilt" part of their specification.

8 Other requirements that may be specified for some applications

Certain specific applications call for transformer requirements not covered in Sections 3 through 7 . They shall be met only when specified in conjunction with the requirements of Sections 3 through 7. These specific requirements may change the dimensions in Figures 1 and 2. They are not included in this standard in order to avoid the implication of greater or lesser availability by listing some and omitting others.

Copyright National Electrical Manufacturers Association
Provided by IHS under license with NEMA
No reproduction or networking permitted without license from IHS
Not for Resale