# American National Standard

A-39-05

## requirements for pad-mounted, compartmental-type, self-cooled, single-phase distribution transformers with high-voltage bushings; high-voltage, 34 500 GrdY/19 920 volts and below; low-voltage, 240/120 volts; 167 kVA and smaller

ANSI C57.12.21-1980

american national standards institute, inc.
1430 broadway, new york, new york 10018

Copyright National Electrical Manufacturers Association
Provided by IHS under license with NEMA
No reproduction or networking permitted without license from IHS

Not for Resale

ANSI®
C57.12.21-1980
Revision of
ANSI C57.12.21-1969

# American National Standard Requirements for Pad-Mounted, Compartmental-Type, Self-Cooled, Single-Phase Distribution Transformers with High-Voltage Bushings; High-Voltage, 34 500 GrdY/19 920 Volts and Below; Low-Voltage, 240/120 Volts; 167 kVA and Smaller

Secretariat

Institute of Electrical and Electronics Engineers
National Electrical Manufacturers Association

Approved October 22, 1979

American National Standards Institute, Inc

Copyright National Electrical Manufacturers Association
Provided by IHS under license with NEMA
No reproduction or networking permitted without license from IHS

Not for Resale

**American National Standard**

An American National Standard implies a consensus of those substantially concerned with its scope and provisions. An American National Standard is intended as a guide to aid the manufacturer, the consumer, and the general public. The existence of an American National Standard does not in any respect preclude anyone, whether he has approved the standard or not, from manufacturing, marketing, purchasing, or using products, processes, or procedures not conforming to the standard. American National Standards are subject to periodic review and users are cautioned to obtain the latest editions.

**CAUTION NOTICE:** This American National Standard may be revised or withdrawn at any time. The procedures of the American National Standards Institute require that action be taken to reaffirm, revise, or withdraw this standard no later than five years from the date of publication. Purchasers of American National Standards may receive current information on all standards by calling or writing the American National Standards Institute.

Published by

**American National Standards Institute**
**1430 Broadway, New York, New York 10018**

Copyright © 1980 by American National Standards Institute, Inc
All rights reserved.

**No part of this publication may be reproduced in any form, in an electronic retrieval system or otherwise, without the prior written permission of the publisher.**

**Printed in the United States of America**

A1M780/4

Copyright National Electrical Manufacturers Association
Provided by IHS under license with NEMA
No reproduction or networking permitted without license from IHS

Not for Resale

# Foreword

(This Foreword is not a part of American National Standard Requirements for Pad-Mounted, Compartmental-Type, Self-Cooled, Single-Phase Distribution Transformers with High Voltage Bushings; High-Voltage, 34 500 GrdY/19 920 Volts and Below; Low-Voltage, 240/120 Volts; 167 kVA and Smaller, ANSI C57.12.21-1980.)

American National Standards Committee on Transformers, Regulators, and Reactors, C57, has for many years been developing and correlating standards on transformers and regulators. The data used in this work have been gathered from many sources, including the standards of the Institute of Electrical and Electronics Engineers and the National Electrical Manufacturers Association, reports of committees of the Edison Electric Institute, and others.

This standard and its companion standard on three-phase transformers (ANSI C57.12.22-1980) were prepared by the Subcommittee on Distribution Transformers, Overhead and Pad-Mounted, C57.12.2. This revision includes new high-voltage ratings and detailed requirements on cabinet construction and cabinet security.

Suggestions for improvement of this standard will be welcome. They should be sent to the American National Standards Institute, 1430 Broadway, New York, N.Y. 10018.

This standard was processed and approved for submittal to ANSI by American National Standards Committee on Transformers, Regulators, and Reactors, C57. Committee approval of the standard does not necessarily imply that all committee members voted for its approval. At the time it approved this standard, the C57 Committee had the following members:

I. H. Koponen, Chairman
C. R. Willmore, Secretary

| *Organization Represented* | *Name of Representative* |
|---|---|
| Bonneville Power Administration | George W. Iliff |
| Electric Light and Power Group | R. R. Bast |
| | R. L. Ensign |
| | I. H. Koponen |
| | J. P. Markey (Alt) |
| | B. F. Smith |
| | E. A. Villasuso, Jr |
| Institute of Electrical and Electronics Engineers | S. Bennon |
| | W. P. Burt |
| | J. C. Dutton |
| | D. C. Johnson |
| | L. W. Long |
| | D. E. Massey |
| National Electrical Manufacturers Association | L. C. Aicher |
| | W. R. Courtade |
| | J. Dix |
| | J. D. Douglass |
| | W. C. Kendall |
| | K. R. Linsley (Alt) |
| | W. J. McNutt |
| | N. M. Neagle (Alt) |
| | R. L. Schwab |
| | R. J. Stahara (Alt) |
| | R. E. Uptegraff, Jr |
| Naval Facilities Engineering Command | H. P. Stickley |
| Rural Electrification Administration | J. C. Arnold, Jr |
| Tennessee Valley Authority | L. R. Smith |
| Underwriters Laboratories | E. J. Huber |
| | W. A. Farquhar (Alt) |
| U.S. Bureau of Reclamation | S. J. Baxter |

Copyright National Electrical Manufacturers Association
Provided by IHS under license with NEMA
No reproduction or networking permitted without license from IHS
Not for Resale

Subcommittee C57.12.2 on Distribution Transformers, Overhead and Pad-Mounted, which developed this standard, had the following members:

R. L. Ensign, Chairman
C. R. Willmore, Secretary

J. C. Arnold, Jr
R. J. Bentzel
A. E. Bolin
H. W. Book
Dale Brown
John Cleary (Alt)
Wayne Cole
C. C. Dixon
R. E. Duncan (Alt)
J. Fisher
P. Ghose
Myron Gruber
C. Kappeler
M. E. Kemph (Alt)
Vic Klemenok
V. B. Martin
G. W. Mayall
R. P. Miller, Sr
M. C. Mingoia (Alt)
C. R. Murray (Alt)
N. M. Neagle
J. R. Newton
W. A. Rishko
Don Rose (Alt)
D. V. Signaigo (Alt)
W. E. Whitely
D. W. Whitley

Copyright National Electrical Manufacturers Association
Provided by IHS under license with NEMA
No reproduction or networking permitted without license from IHS
Not for Resale

# Contents


SECTION PAGE

1. Scope . . . . . 6

2. Related Standards . . . . . 6

3. Ratings . . . . . 6
   3.1 Kilovolt-Ampere Ratings . . . . . 6
   3.2 Voltage Ratings and Tap Ratings . . . . . 7

4. Basic Lightning Impulse Insulation Levels and Dielectric Test Levels . . . . . 7

5. Tests . . . . . 7
   5.1 General . . . . . 7
   5.2 Dielectric Tests . . . . . 7
   5.3 Reference Temperature . . . . . 7

6. Construction . . . . . 7
   6.1 General . . . . . 7
   6.2 Bushings and Terminals . . . . . 9
   6.3 High-Voltage and Low-Voltage Compartments . . . . . 11
   6.4 Instruction Nameplate . . . . . 11
   6.5 Oil Preservation . . . . . 11
   6.6 Tanks . . . . . 12

7. Other Requirements That May Be Specified for Some Applications . . . . . 12

8. Revision of American National Standards Referred to in This Document . . . . . 12

Tables

Table 1 Voltage Ratings and Insulation Levels . . . . . 7
Table 2 Electrical Characteristics and Minimum Electrical Clearances of High-Voltage Bushings and Low-Voltage Terminals . . . . . 9

Figures

Fig. 1 Interchangeability Dimensions . . . . . 8
Fig. 2 Captive and Recessed Pentahead and Hex Head Bolts . . . . . 10
Fig. 3 High-Voltage Terminals . . . . . 11
Fig. 4 Low-Voltage Terminals . . . . . 11
Fig. 5 Other Low-Voltage Terminal Spacing . . . . . 12


Copyright National Electrical Manufacturers Association
Provided by IHS under license with NEMA
No reproduction or networking permitted without license from IHS

Not for Resale

# American National Standard Requirements for Pad-Mounted, Compartmental-Type, Self-Cooled, Single-Phase Distribution Transformers with High-Voltage Bushings; High-Voltage, 34 500 GrdY/19 920 Volts and Below; Low-Voltage, 240/120 Volts; 167 kVA and Smaller

## 1. Scope

**1.1** This standard is intended for use as a basis for determining performance, interchangeability, and safety of the equipment covered, and to assist in the proper selection of such equipment.

**1.2** This standard covers certain electrical, dimensional, and mechanical characteristics and takes into consideration certain safety features of single-phase, 60-Hz, mineral-oil-immersed, self-cooled, pad-mounted, compartmental-type distribution transformers with high-voltage bushings. These transformers are rated 167 kVA and smaller with high voltages of 34 500 GrdY/19 920 volts and below for operation between one phase and grounded neutral, and low voltages of 240/120 volts. These transformers are generally used for purposes of stepdown from an underground primary cable supply.

NOTE: Refer to latest federal regulations concerning PCB contamination in transformers.

**1.3** This standard covers bushing and terminal arrangements for both radial and loop feed systems.

**1.4** This standard does not cover the electrical and mechanical requirements of any accessory devices that may be supplied with the transformer.

**1.5** All characteristics, definitions, terminology, and voltage designations and tests, except as otherwise specified herein, shall be in accordance with the American National Standards listed in Section 2.

**1.6** This standard generally conforms with ANSI C57.12.20-1974 and C57.12.20a-1978.

## 2. Related Standards

This standard is intended for use in conjunction with the following American National Standards (see Section 8):

American National Standard General Requirements for Distribution, Power, and Regulating Transformers, ANSI/IEEE C57.12.00-1979

American National Standard Guide for Loading Mineral-Oil-Immersed Overhead-Type Distribution Transformers with 55°C or 65°C Average Winding Rise, ANSI C57.91-1974 (appendix to ANSI/IEEE C57.12.00)

American National Standard Requirements for Overhead-Type Distribution Transformers, 67 000 Volts and Below, 500 kVA and Smaller, ANSI C57.12.20-1974 and C57.12.20a-1978

American National Standard Terminal Markings and Connections for Distribution and Power Transformers, ANSI C57.12.70-1978

American National Standard Terminology for Power and Distribution Transformers, ANSI/IEEE C57.12.80-1978

American National Standard Test Code for Liquid-Immersed Distribution, Power, and Regulating Transformers, ANSI/IEEE C57.12.90-1979

## 3. Ratings

**3.1 Kilovolt-Ampere Ratings.** Kilovolt-ampere ratings are continuous and based on not exceeding either a 65°C average winding temperature rise or an 80°C hot-spot conductor temperature rise. The temperature rise of the insulating oil shall not exceed 65°C when measured near the top of the tank. These temperature rises



Copyright National Electrical Manufacturers Association
Provided by IHS under license with NEMA
No reproduction or networking permitted without license from IHS
Not for Resale

**Table 1**
**Voltage Ratings and Insulation Levels**

| Rating (volts) | BIL (kV) |
|---|---|
| Transformer high-voltage: | |
| 4 160 GrdY/2 400 | 60 |
| 8 320 GrdY/4 800 | 75 |
| 12 000 GrdY/6 930 | 95 |
| 12 470 GrdY/7 200 | 95 |
| 13 200 GrdY/7 620 | 95 |
| 13 800 GrdY/7 970 | 95 |
| 16 340 GrdY/9 430 | 95 |
| 22 860 GrdY/13 200 | 125 |
| 23 900 GrdY/13 800 | 125 |
| 24 940 GrdY/14 400 | 125 |
| 34 500 GrdY/19 920 | 150 |
| Transformer low-voltage: | |
| 240/120 | 30 |

are based on an altitude not exceeding 3300 feet (1000 meters). The kilovolt-ampere ratings shall be as follows:

25
37.5
50
75
100
167

**3.2 Voltage Ratings and Tap Ratings**

**3.2.1** Voltage ratings shall be in accordance with Table 1.

**3.2.2** No taps shall be provided.

## 4. Basic Lightning Impulse Insulation Levels and Dielectric Test Levels

**4.1** Basic lightning impulse insulation levels (BIL) shall be in accordance with Table 1.

**4.2** Dielectric test levels shall be in accordance with the distribution levels in Section 4 of American National Standard General Requirements for Distribution, Power, and Regulating Transformers, ANSI/IEEE C57.12.00-1979.

## 5. Tests

**5.1 General.** Except as specified in 5.2, tests shall be performed as specified in ANSI/IEEE C57.12.00-1979 and in American National Standard Test Code for Liquid-Immersed Power, Distribution, and Regulating Transformers, ANSI/IEEE C57.12.90-1979.

**5.2 Dielectric Tests.** No applied-potential test is required. Induced-potential tests shall be performed by applying between the terminals of one winding a voltage which will develop from high-voltage line terminals to ground a voltage of 1000 volts plus 3.46 times the rated transformer winding voltage; in no case shall the voltage developed exceed 40 000 volts for 125 kV BIL and 50 000 volts for 150 kV BIL. For this test the neutral terminal shall be grounded.

**5.3 Reference Temperature.** The reference temperature to which losses, impedance, regulation, and efficiency are corrected shall be 85°C.

## 6. Construction

**6.1 General.** A pad-mounted, compartmental-type transformer shall consist of a tank with high-voltage and low-voltage cable terminating compartments, as shown in Fig. 1. The compartments shall be separated by a barrier of metal or other rigid material.

The transformer tank and compartments shall be assembled as an integral unit suitable for flush mounting on a flat rigid surface. The assembly shall restrict the entry of water (other than flood water) into compartments so as not to impair the operation of the transformer.

**6.1.1** Cabinet security as described in 6.1.2 through 6.1.13 shall be evaluated in accordance with the test procedures and requirements of NEMA Official Standards Proposal – Design Test Method for Cabinet Security, TR-P9-1977.[1]

**6.1.2** The high-voltage and low-voltage compartments shall be located side by side on one side of the transformer tank. When viewed from the front the low-voltage compartment shall be on the right.

**6.1.3** Access to the termination compartments shall be provided by a single door or by individual compartment doors. If individual compartment doors are provided, they shall be so constructed as to provide access to the high-voltage compartment only after the door to the low-voltage compartment has been opened. There shall be at least one additional fastening device that must be removed before the high-voltage door can be opened. Where the low-voltage compartment door is of a flat-panel design, or where only a single door is provided, the door shall have three-point latching with a handle provided for a locking device. If a lift-up hood or a single door provides access to both the high-voltage compartment and the low-voltage compartment, one-

[1] Copies are available from the National Electrical Manufacturers Association, 2101 L Street, NW, Washington, D.C. 20037.



Copyright National Electrical Manufacturers Association
Provided by IHS under license with NEMA
No reproduction or networking permitted without license from IHS
Not for Resale

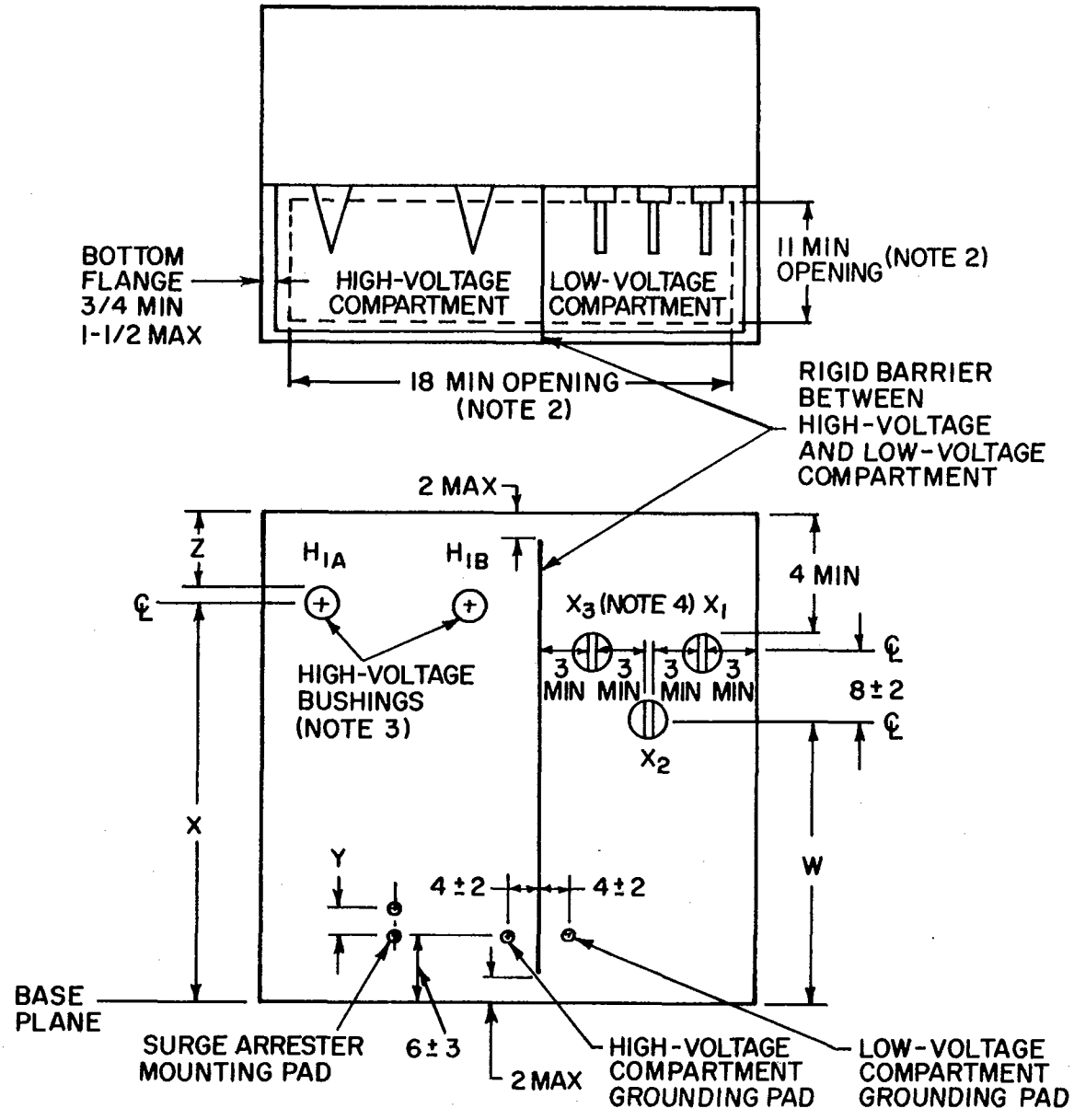


| BIL (kV) | W | X | Y | Z (Minimum) |
|---|---|---|---|---|
| 60, 75, 95 | 20 ± 4 | 22 ± 1 | 2-1/2 ± 1/4 | 5 |
| 125 | 25 ± 9 | 30 ± 6 | 2-1/2 ± 1/4 | 5-3/4 |
| 150 | 25 ± 9 | 36 ± 6 | 9-1/4 ± 1/4 | 8 |

NOTES:
(1) All dimensions are in inches unless otherwise specified.
(2) This is the minimum opening in the bottom of the compartment for cable entrance.
(3) When loop feed is not required, omit one high-voltage bushing.
(4) Low voltage is shown for additive polarity transformers. The location of $X_1$ and $X_3$ is reversed for subtractive polarity.

**Fig. 1**
**Interchangeability Dimensions**



Copyright National Electrical Manufacturers Association
Provided by IHS under license with NEMA
No reproduction or networking permitted without license from IHS
Not for Resale

**Table 2**
**Electrical Characteristics and Minimum Electrical Clearances of High-Voltage Bushings and Low-Voltage Terminals**

| Rating (volts) | BIL (kV) | 60-Hz Dry-One-Minute Withstand (kV) | Minimum Clearance Live Parts to Ground* (inches) |
|---|---|---|---|
| 240/120 | 30 | 10 | 1 |
| 4 160 GrdY/2 400 | 60 | 21 | 2-1/2 |
| 8 320 GrdY/4 800 | 75 | 27 | 3-1/2† |
| 12 000 GrdY/6 930 to 16 340 GrdY/9 430 | 95 | 35 | 5† |
| 22 860 GrdY/13 200 to 24 940 GrdY/14 400 | 125 | 42 | 5-3/4 |
| 34 500 GrdY/19 920 | 150 | 70 | 8† |

*These dimensions should be increased wherever possible to allow the user ease in making connections.

†Where clearances are less than those shown, an adequate nonhygroscopic insulating barrier shall be provided, but in no case shall the dimension between live parts and the barrier be less than three inches. The use of barriers shall not reduce the above electrical characteristics.

point latching with provision for a locking device shall be provided, along with an additional door or lift-out panel that must be removed before access can be gained to the high-voltage compartment. Hinge pins and associated barrels shall be of corrosion-resistant material, passivated AISI Type 304 or the equivalent.

**6.1.4** The transformer tank and compartments shall be constructed so as to limit disassembly, breakage, and prying open of any doors, panels, and sills with the doors in the closed and locked position.

**6.1.5** There shall be no exposed screws, bolts, or hinging or fastening devices that are externally removable. In addition, there shall be no openings through which foreign objects such as sticks, rods, or wires might be inserted to contact live parts.

**6.1.6** The door handle and hasp shall be so designed and of such a material as to limit breaking or bending. The door handle and the provision for a locking device on the low-voltage compartment door shall be so designed and located as to limit prying, cutting, or breaking of the locking mechanism.

**6.1.7** One or more captive and recessed pentahead or hex head bolts shall be provided for additional security of the low-voltage compartment door. A blind bolt hole shall be provided. The design of the captive and recessed bolt shall be in accordance with Fig. 2. Bolts shall be corrosion resistant and their design shall minimize the possibility of misalignment and cross threading.

**6.1.8** Transformers with handholes shall have a cover that is removable only after being unfastened from inside the compartments.

**6.1.9** The bottom edges of the compartments shall be so constructed as to provide for the use of hold-down devices accessible only from inside the compartments.

**6.1.10** The construction of the unit shall be such that it can be lifted, skidded, or slid, or a combination of these, into place on the mounting surface without disturbing the high-voltage or low-voltage cables.

**6.1.11** All compartment and transformer surfaces in contact with the mounting surface and up to at least one inch above it shall be designed or treated to minimize corrosion.

**6.1.12** The transformer base shall be arranged for rolling in two directions: parallel to and at right angles to one side of the transformer.

**6.1.13** The lifting provisions shall be arranged on the tank to provide a distributed balanced lift in a vertical direction for the completely assembled transformer and shall be designed to provide a safety factor of 5.

The safety factor of 5 is the ratio of the ultimate stress of the material used to the working stress. The working stress is the maximum combined stress developed in the lifting provisions by the static load of the completely assembled transformer.

### 6.2 Bushings and Terminals

**6.2.1** The electrical characteristics and clearances of the completely assembled high-voltage bushings and low-voltage terminals shall be as shown in Table 2.

**6.2.2** The number, location, and arrangement of the high-voltage bushings and low-voltage terminals shall be as shown in Fig. 1.



Copyright National Electrical Manufacturers Association
Provided by IHS under license with NEMA
No reproduction or networking permitted without license from IHS

Not for Resale

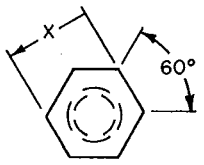


| Hex Head Bolt Size | X |
|---|---|
| 3/8 | 0.562 + 0.000, -0.018 |
| 1/2 | 0.750 + 0.000, -0.025 |

Hex Head

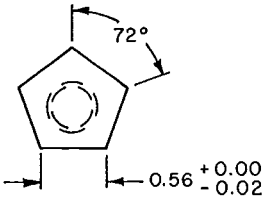


Pentahead

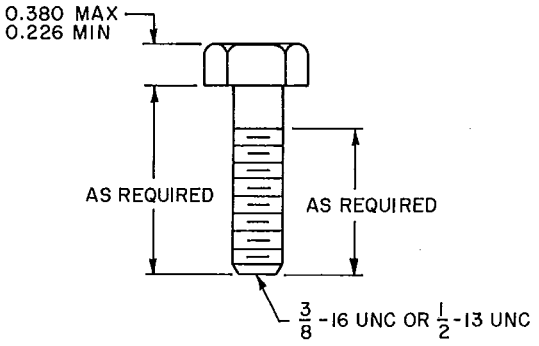


Side View of Bolt

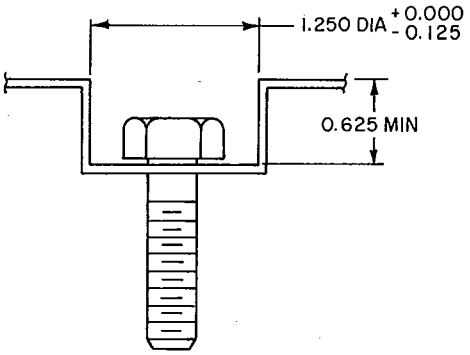


Cross Section of Recessed Nonrotating Cup, Preferred Method

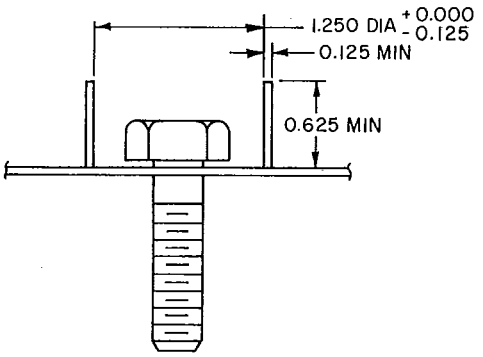


Cross Section of Recessed Nonrotating Cup, Alternate Method

NOTES:
(1) All dimensions are in inches unless otherwise specified.
(2) The captive method is not shown.

**Fig. 2**
**Captive and Recessed Pentahead and Hex Head Bolts**

**6.2.3** High-voltage bushings shall have clamp-type connectors and shall be arranged for vertical take-off. The clamp connectors shall accommodate No. 8 AWG solid to 2/0 AWG stranded conductors and shall be as shown in Fig. 3.

**6.2.4** The $H_2$ end of the high-voltage winding shall be connected to the tank internally, and this connection shall be independent of all other connections.

**6.2.5** Low-voltage line and neutral terminals shall be in accordance with Fig. 4 and arranged for vertical take-off. Terminal dimensions shall be as shown in Fig. 4.

**6.2.6** The low-voltage neutral shall be either a blade connected directly to the tank or a fully insulated bushing. If a bushing is used, a ground pad shall be provided on the outer surface of the tank. One or more removable ground straps suitably sized for the short-circuit rating of the transformer as defined in ANSI/IEEE C57.12.00-1079 shall be provided and connected be-



Copyright National Electrical Manufacturers Association
Provided by IHS under license with NEMA
No reproduction or networking permitted without license from IHS
Not for Resale

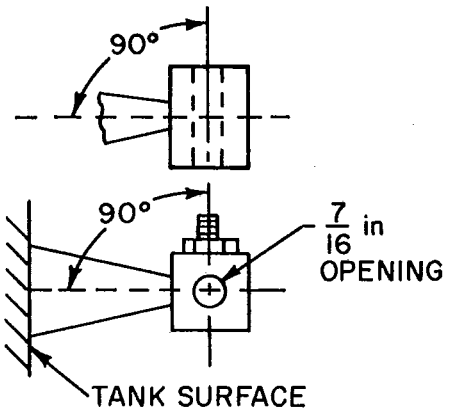


NOTES:
(1) Threaded parts of the connector shall be removable without removing the bushings.
(2) Connector clamping bolts shall be 3/8-inch NC threads, class-2 fit.
(3) One or two connector clamping bolts may be used, but U-bolts or J-bolts shall not be used.

**Fig. 3**
**High-Voltage Terminals**

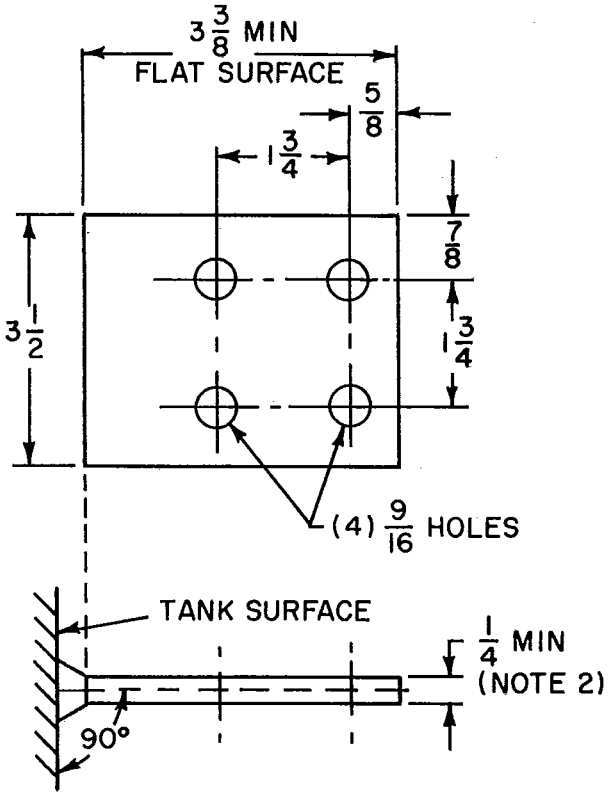


NOTES:
(1) All dimensions are in inches and are nominal unless otherwise specified.
(2) Greater thickness may be required.

**Fig. 4**
**Low-Voltage Terminals**

tween the low-voltage neutral terminal and the ground pad.

**6.2.7** Bushing and terminal designations shall be as defined in American National Standard Terminal Markings and Connections for Power and Distribution Transformers, ANSI C57.12.70-1978. The high-voltage bushing and low-voltage terminal designations and locations are shown in Fig. 1.

The identification of bushing and terminal connections shall be shown on the instruction nameplate (see 6.4).

### 6.3 High-Voltage and Low-Voltage Compartments

**6.3.1** The compartment door or doors shall be of sufficient size to provide adequate operating and working space when removed or open. The doors shall either be equipped for latching in the open position or designed for manual removal. Protection against accidental contact with live parts shall be provided by adequate safeguards when the doors are removed or open.

**6.3.2** If the transformer is supplied with fuses in the high-voltage compartment, the compartment door or doors shall be adequate to withstand gas pressures incidental to the fuse operation at the maximum rated interrupting capacity of the fuse.

### 6.4 Instruction Nameplate

**6.4.1** The instruction nameplate shall be located in the low-voltage compartment and shall be readable with the cables in place. Where the nameplate is mounted on a removable part, the manufacturer's name and the transformer serial number shall be permanently affixed to a nonremovable part.

**6.4.2** The nameplate shall conform to paragraph 9.4 of ANSI/IEEE C57.12.00-1979.

### 6.5 Oil Preservation

**6.5.1** Transformers shall be of sealed-tank construction. Sealed-tank construction is that construction which seals the interior of the tank from the atmosphere and in which the gas volume plus the oil volume remains constant. The transformer shall remain effectively sealed for a top-oil temperature range of -5°C to +105°C continuous and under operating conditions as described in ANSI C57.91-1974.

**6.5.2** A replaceable valve shall be furnished in the terminating compartment on the tank wall above the 140°C top oil level, by the manufacturer's calculation, and shall be located so as not to interfere with the use of the high-voltage and low-voltage bushings, the operating handle of the low-voltage circuit breaker, and the high-voltage fusings. The inlet port shall be 1/4 inch or larger NPT (or NF thread with gasket), sized for the specified minimum flow rate. Exposed parts shall be of weather- and corrosion-resistant materials. Gaskets



Copyright National Electrical Manufacturers Association
Provided by IHS under license with NEMA
No reproduction or networking permitted without license from IHS
Not for Resale

and O-rings shall withstand oil vapor and a 105°C temperature continuous under operating conditions as described in American National Standard Guide for Loading Mineral-Oil-Immersed Overhead-Type Distribution Transformers with 55°C or 65°C Average Winding Rise, ANSI C57.91-1974, without seizing or deteriorating, for the life of the transformer. The valve shall have a pull ring for manually reducing pressure to atmospheric using a standard hook-stick and shall be capable of withstanding for one minute a static pull force of 25 pounds without permanent deformation. The valve shall withstand for one minute a static force of 100 pounds applied normal to its longitudinal axis at the outermost extremity of the body. When specified, the venting port on the outward side of the valve head seat shall be protected to prevent entry of dust, moisture, and insects before and after the valve has actuated; or a weather-cap-type indicator shall be provided, which will remain attached to the valve and provide positive indication to an observer that the valve has operated. Venting and sealing characteristics shall be as follows:

Cracking pressure – 10 psig ± 2 psig
Resealing pressure – 6 psig minimum
Zero leakage from resealing pressure to -8 psig
Flow at 15 psig – 35 SCFM minimum (where SCFM is the flow in cubic feet per minute corrected for air pressure of 14.7 psi and air temperature of 21.1°C)

**6.6 Tanks**

**6.6.1** The tank shall be of sufficient strength to withstand a pressure of 7 psig without permanent distortion. A 1/2-inch-minimum NPT upper plug (or cap) for filling and pressure testing shall be provided. A 1/2-inch-minimum NPT drain plug (or cap) shall be provided.

**6.6.2** The cover shall be welded or shall be bolted in place with adequate gasketing.

**6.6.3** Where a bolted-on cover of any type is used, the construction shall conform to 6.1.

**6.6.4** Tank ground provision shall consist of two steel pads, each with a 1/2-13 UNC tapped hole, 7/16-inch deep. These ground pads shall be welded on or near the transformer base, one in the high-voltage compartment and one in the low-voltage compartment, as shown in Fig. 1. In cases where the transformer tank and compartments are separate, provision shall be made for electrically connecting them.

**6.6.5** Mounting provisions for the surge arrester shall consist of two steel pads, each with 1/2-13 UNC tapped holes, 7/16-inch deep, or 1/2-13 UNC studs, 1-inch long, located in the high-voltage compartment.

**6.6.6 Liquid Level Marking.** Suitable means for indicating the correct oil level at 25°C shall be provided.

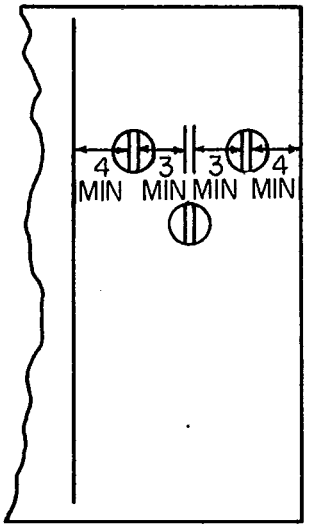


NOTE: All dimensions are in inches.

**Fig. 5**
**Other Low-Voltage Terminal Spacing**

## 7. Other Requirements That May Be Specified for Some Applications

Certain specific applications call for transformer requirements not covered in Sections 3 through 6. Section 7 comprises descriptions of the most frequently encountered requirements for such transformers. They shall be met only when specified in conjunction with the requirements of Sections 3 through 6. These specific requirements may change the dimensions in Fig. 1, 3, and 4.

**7.1** When specified, taps shall be provided.

**7.2** When specified, additional accessories such as expulsion fuses, current-limiting fuses, and low-voltage circuit breakers shall be provided. Accessories that are suitable only for de-energized operation shall be so marked.

**7.3** When specified, a high-voltage rating of 34 500 GrdY/19 920 volts with 125 kV BIL and 18 kV insulation class shall be provided.

**7.4** When specified, the horizontal spacing of the low-voltage terminal shall be as shown in Fig. 5.

## 8. Revision of American National Standards Referred to in This Document

When the American National Standards referred to in this document are superseded by a revision approved by the American National Standards Institute, Inc, the revision shall apply.



Copyright National Electrical Manufacturers Association
Provided by IHS under license with NEMA
No reproduction or networking permitted without license from IHS
Not for Resale

# American National Standards in the C57 Series

**ANSI/IEEE C57.12.00-1979** General Requirements for Liquid-Immersed Distribution, Power, and Regulating Transformers (see Appendix C57.91)

**ANSI/IEEE C57.12.01-1978** American National Standard General Requirements for Dry-Type Distribution and Power Transformers

**ANSI C57.12.10-1977** Requirements for Transformers 230 000 Volts and Below, 833/958 through 8333/10 417 kVA Single-Phase and 750/862 through 60 000/80 000/100 000 kVA Three-Phase, including Supplement ANSI C57.12.10a-1978

**ANSI/IEEE C57.12.11-1980** Guide for Installation of Oil-Immersed Transformers, 10 000 kVA and Larger, and 69 kV to 287 kV Voltage Rating

**ANSI/IEEE C57.12.12-1980** Guide for Installation of Oil-Immersed EHV Transformers 345 kV and Above

**ANSI C57.12.20-1974** Requirements for Overhead-Type Distribution Transformers 67 000 Volts and Below; 500 kVA and Smaller, including Supplement ANSI C57.12.20a-1978

**ANSI C57.12.21-1980** Requirements for Pad-Mounted, Compartmental-Type, Self-Cooled, Single-Phase Distribution Transformers with High-Voltage Bushings: High Voltage, 34 500 GrdY/19 920 Volts and Below; Low Voltage, 240/120 Volts; 167 kVA and Smaller

**ANSI C57.12.22-1980** Requirements for Pad-Mounted, Compartmental-Type, Self-Cooled, Three-Phase Distribution Transformers with High-Voltage Bushings; High Voltage, 34 500 GrdY/19 920 Volts and Below; 2500 kVA and Smaller

**ANSI C57.12.23-1978** Requirements for Underground-Type Single-Phase Distribution Transformers with Separable Insulated High-Voltage Connectors, 100 kVA and Smaller; High Voltage 24 940 GrdY/14 400 Volts and Below; Low Voltage 240/120

**ANSI C57.12.24-1978** Requirements for Underground-Type Three-Phase Distribution Transformers; 2500 kVA and Smaller; High Voltage 24 940 GrdY/14 400 Volts and Below; Low Voltage 480 Volts and Below

**ANSI C57.12.25-1975** Requirements for Pad-Mounted Compartmental-Type Single-Phase Distribution Transformers with Separable Insulated High-Voltage Connectors, High Voltage, 24 940GrdY/14 400 Volts and Below: Low Voltage, 240/120 Volts and Below; 167 kVA and Smaller

**ANSI C57.12.26-1975** Requirements for Pad-Mounted Compartmental-Type, Self-Cooled, Three-Phase Distribution Transformers for Use with Separable Insulated High-Voltage Connectors, High Voltage, 24 940GrdY/14 400 Volts and Below; 2500 kVA and Smaller

**ANSI C57.12.30-1977** Requirements for Load-Tap-Changing Transformers 230 000 Volts and Below, 3750/4687 through 60 000/80 000/100 000 kVA, Three Phase

**ANSI C57.12.40-1975** Requirements for Secondary Network Transformers, Subway and Vault Types (Liquid Immersed)

**ANSI C57.12.70-1978** Terminal Markings and Connections for Distribution and Power Transformers

**ANSI/IEEE C57.12.80-1978** Terminology for Power and Distribution Transformers

**ANSI/IEEE C57.12.90-1979** Test Code for Liquid-Immersed Distribution, Power, and Regulating Transformers, including Supplement ANSI/IEEE C57.12.90a-1978 (see Appendix C57.98)

**ANSI/IEEE C57.12.91-1978** American National Standard Test Code for Dry-Type Distribution and Power Transformers

**ANSI C57.13-1978** Requirements for Instrument Transformers

**ANSI C57.15-1968** Requirements, Terminology, and Test Code for Step-Voltage and Induction-Voltage Regulators

**ANSI C57.16-1958 (R1971)** Requirements, Terminology, and Test Code for Current-Limiting Reactors

**ANSI C57.17-1965 (R1978)** Requirements for Arc Furnace Transformers

**ANSI C57.21-1971** Requirements, Terminology, and Test Code for Shunt Reactors

**ANSI/IEEE C57.100-1974** Test Procedure for Thermal Evaluation of Oil-Immersed Distribution Transformers

**ANSI/IEEE C57.104-1978** Guide for the Detection and Determination of Generated Gases in Oil-Immersed Transformers and their Relation to the Serviceability of the Equipment

**ANSI/IEEE C57.105-1978** Guide for Application of Transformer Connections in Three-Phase Distribution Systems

**ANSI/IEEE C57.106-1977** Guide for Acceptance and Maintenance of Insulating Oil in Equipment

## Appendixes to C57 Standards

**(Not approved as American National Standards)**

**C57.91** Guide for Loading Mineral Oil-Immersed Overhead-Type Distribution Transformers with 55°C or 65°C Average Winding Rise, Appendix to C57.12.00-1973 (IEEE Std 462-1973)

**C57.92** Guide for Loading Oil-Immersed Distribution and Power Transformers, Appendix to C57.12 standards

**C57.94** Guide for Installation and Maintenance of Dry-Type Transformers, Appendix to C57.12 standards

**C57.95** Guide for Loading Oil-Immersed Step-Voltage and Induction-Voltage Regulators, Appendix to C57.15-1968

**C57.96** Guide for Loading Dry-Type Distribution and Power Transformers, Appendix to C57.12 standards

**C57.97** Guide for Preparation of Specifications for Large Power Transformers, With or Without Load-Tap-Changing, Appendix to C57.12 standards

**C57.98** Guide for Transformer Impulse Tests, Appendix to C57.12.90

**C57.99** Guide for Loading Dry-Type and Oil-Immersed Current-Limiting Reactors, Appendix to C57.16-1958 (R1971)

**American National Standards Institute, Inc**
**1430 Broadway New York, N.Y. 10018**

Copyright National Electrical Manufacturers Association
Provided by IHS under license with NEMA
No reproduction or networking permitted without license from IHS

Not for Resale