STD-NEMA C57.12.10-ENGL 1998 ■ 6470247 0518565 618 ■

AMERICAN NATIONAL STANDARD

American National Standard

ANSI C57.12.10-1997

American National Standard

For Transformers—

230 kV and Below
833 / 958 through
8333 / 10 417 kVA, Single-Phase,
and 750 / 862 through
60 000/ 80 000 / 100 000 kVA,
Three-Phase Without
Load Tap Changing;
and 3750 / 4687 through
60 000 / 80 000 / 100 000 kVA
with Load Tap Changing—
Safety Requirements

NATIONAL ELECTRICAL MANUFACTURERS ASSOCIATION
1300 NORTH 17TH STREET, SUITE 1847, ROSSLYN, VA 22209
(703) 841-3200 FAX: (703) 841-3300

Copyright National Electrical Manufacturers Association
Provided by IHS under license with NEMA
No reproduction or networking permitted without license from IHS
Not for Resale

ANSI® C57.12.10-1997

AMERICAN NATIONAL STANDARD FOR TRANSFORMERS—

230 kV and Below 833 / 958 through 8333 / 10 417 kVA, Single-Phase, and 750 / 862 through 60 000 / 80 000 / 100 000 kVA, Three-Phase Without Load Tap Changing; and 3750 / 4687 through 60 000 / 80 000 / 100 000 kVA with Load Tap Changing— Safety Requirements

Secretariat

Institute of Electrical and Electronics Engineers
National Electrical Manufacturers Association

January 7, 1999

American National Standards Institute, Inc.

Copyright National Electrical Manufacturers Association
Provided by IHS under license with NEMA
No reproduction or networking permitted without license from IHS
Not for Resale

American National Standard

Approval of an American National Standard requires verification by ANSI that the requirements for due process, consensus, and other criteria for approval have been met by the standards developer.

Consensus is established when, in the judgment of the ANSI Board of Standards Review, substantial agreement has been reached by directly and materially affected interests. Substantial agreement means much more than a simple majority, but not necessarily unanimity. Consensus requires that all views and objections be considered, and that a concerted effort be made toward their resolution.

The use of American National Standards is completely voluntary; their existence does not in any respect preclude anyone, whether he has approved the standards or not, from manufacturing, marketing, purchasing, or using products, processes, or procedures not conforming to the standards.

The American National Standards Institute does not develop standards and will in no circumstances give an interpretation of any American National Standard. Moreover, no person shall have the right or authority to issue an interpretation of an American National Standard in the name of the American National Standards Institute. Requests for interpretations shall be addressed to the secretariat or sponsor whose name appears on the title page of this standard.

CAUTION NOTICE: This American National Standard may be revised or withdrawn at any time. The procedures of the American National Standards Institute require that action be taken to reaffirm, revise, or withdraw this standard no later than five years from the date of approval. Purchasers of American National Standards may receive current information on all standards by calling or writing the American National Standards Institute.

Published by

National Electrical Manufacturers Association
1300 N. 17th Street, Rosslyn, Virginia 22209

Copyright © 1998 National Electrical Manufacturers Association
All rights reserved.

No part of this publication may be reproduced in any form, in an electronic retrieval system or otherwise, without prior written permission of the publisher.

Printed in the United States of America

Copyright National Electrical Manufacturers Association
Provided by IHS under license with NEMA
No reproduction or networking permitted without license from IHS
Not for Resale

Contents

Page

1 Introduction and scope 1
1.1 Introduction 1
1.2 Scope 1
1.3 Mandatory requirements 1

2 Referenced and related standards 2
2.1 Referenced American National Standards 2
2.2 Related standard 2

3 Terminology 2

4 Rating data 3
4.1 Usual service conditions 3
4.2 Kilovolt-ampere ratings 3
4.3 Kilovolt-ampere and voltage ratings 3
4.4 Insulation levels 3
4.5 Taps 3
4.6 Impedance voltage 3
4.7 Top-liquid temperature-range limits 4
4.8 Routine tests 4

5 Construction 10
5.1 Accessories 10
5.2 Bushings 12
5.3 Lifting, moving, and jacking facilities 13
5.4 Nameplate 15
5.5 Ground pads 15
5.6 Polarity, angular displacement, and terminal markings 16
5.7 Liquid preservation 16
5.8 Tanks 18
5.9 Auxiliary cooling equipment 18
5.10 Power supply for transformer auxiliary equipment and controls 19

6 Basic construction features—load-tap-changing equipment 19
6.1 Load-tap-changing equipment 19
6.2 Arcing tap switch 20
6.3 Motor-drive mechanism 20
6.4 Position indicator 20
6.5 Control equipment and accessories 21

7 Alarm contacts 26

8 Other ratings 26
8.1 Other kilovolt-ampere ratings 26
8.2 Other high-voltage ratings 27
8.3 Other winding ratings and connections 27
8.4 Other basic impulse insulation levels (BILs) and impedance voltages 28

Copyright National Electrical Manufacturers Association
Provided by IHS under license with NEMA
No reproduction or networking permitted without license from IHS
Not for Resale

9 Other construction features—general 30
9.1 Other bushings 30
9.2 Other neutral terminations 31
9.3 Terminal board 31
9.4 Junction boxes 32
9.5 Disconnecting switches with interlocks and terminal chambers 32
9.6 Throat connections 32
9.7 Temperature and liquid-level indicator contacts and wiring 34
9.8 Current transformers 34
9.9 Provision for future forced-air cooling 35
9.10 Pressure-type relay 36
9.11 Moving facilities 36
9.12 Surge arresters 36
9.13 Other oil preservation systems 36
9.14 Other insulating liquid 37
9.15 Other tanks 37
9.16 Other loading 37
9.17 "Other" tests 37

10 Other construction features—load-tap-changing equipment 37
10.1 Terminal blocks 37
10.2 Paralleling circuit and operation 37
10.3 Omission of automatic load-tap-changing control 38
10.4 Lightning surge voltage protector for motor power supply 38

Tables

Table 1 Kilovolt-ampere ratings, self-cooled (ONAN 4
Table 2 Kilovolt-ampere ratings, self-cooled (ONAN), forced-cooled first-stage and forced-cooled second stage three-phase (with, or without, load tap changing), 12 000-100 000 kVA 4
Table 3 Range of voltage and kilovolt-ampere ratings for single-phase transformers, 833-8333 kVA 5
Table 4 Range of voltage and kilovolt-ampere ratings for three-phase transformers, without load tap changing 750-10 000 kVA 6
Table 5 Range of voltage and kilovolt-ampere ratings for three-phase transformers, with load tap changing 3750-10 000 kVA 7
Table 6 Range of voltage and kilovolt-ampere ratings for three-phase transformers, with or without load tap changing 12 000-60 000 kVA 7
Table 7 High-voltage winding insulation levels of single-phase transformers 8
Table 8 High-voltage winding insulation levels of three-phase transformers 8
Table 9 Low-voltage winding insulation levels 9
Table 10 BILs and percent impedance voltages at self-cooled (ONAN) rating 9
Table 11 "Basic standard" construction features 14
Table 12 Single- and three-phase, self-cooled (ONAN) and forced-air-cooled (ONAF) ratings, 750-12 500 kVA 27
Table 13 Other (nonpreferred) three-phase, self-cooled (ONAN), forced-cooled first-stage, and forced-cooled second-stage kilovolt-ampere ratings (with, or without, load tap changing 27
Table 14 Range of other high-voltage ratings for single- and three-phase transformers, 95-650 kV BIL (applicable to 750-10 000 kVA, ONAN ratings 28
Table 15 Range of other high-voltage ratings for three-phase transformers, 150-900 kV BIL (applicable to 12 000-60 000 kVA, ONAN rating 29
Table 16 High-voltage and kilovolt-ampere ratings for series-multiple low-voltage ratings for single-phase transformers 29

Copyright National Electrical Manufacturers Association
Provided by IHS under license with NEMA
No reproduction or networking permitted without license from IHS
Not for Resale

Table 17 High-voltage and kilovolt-ampere ratings for series-multiple low-voltage ratings for three-phase transformers 30
Table 18 Other BILs an associated percent impedance voltages at self-cooled (ONAN) rating (with, or without, load tap changing) 30
Table 19 "Other" construction features 33
Table 20 Recommended accuracy classification of bushing current transformers for relaying service 35

Figures

Figure 1 Accessories 10
Figure 2 Bushing arrangement 13
Figure 3 Provision for jacking (transformers above 2500 kVA) 17
Figure 4 Angular displacement 17
Figure 5 Position indicator for load tap changer 21
Figure 6 Contact wiring and wire color coding 34
Figure 7 Simplified schematic of current circuit for paralleling two transformers 39

Copyright National Electrical Manufacturers Association
Provided by IHS under license with NEMA
No reproduction or networking permitted without license from IHS
Not for Resale

Foreword (This Foreword is not part of American National Standard C57.12.10)

ANSI C57.12.10-1988, American National Standard for Transformers—230 kV and Below 833/958 through 8333/10417 kVA Single-Phase, and 750/862 through 60 000/80 000/100 000 kVA, Three-Phase without Load Tap Changing; and 3750/4687 through 60 000/80 000/100 000 kVA with Load Tap Changing—Safety Requirements was last issued in 1988. The focus of this revision was to consolidate requirements for single-phase, three-phase, and load tap changing substation transformers into a single document. This update combines C57.12.10-1977 and C57.12.30-1977.

In the fall of 1996, a working group was formed to determine if there was a need to revise this standard or if it was appropriate to reaffirm as written. The need to revise was apparent in order to update specific technologies, correct errors, and revise the document format.

To comply with current standard format styles, segmentation of the standard into Parts A and B was eliminated. This format was originally used to separate "Basic Standard" and "Other" ratings and Construction Features. All references and related standards were also brought up to date. A number of typographical errors were corrected along with specific section references.

Some of the most comprehensive changes were associated with the load tap changing control technology. Clause 6.5.2, Devices and Accessories was significantly expanded and renamed Requirements for Automatic Control. Clause 6.6.5 was also expanded to better define dielectric test requirements. The simplified reference schematic (Figure 7) for paralleling transformers was revised to comply with C37.2 and IEEE Standard 315. The cooling class designation references were changed from two to four characters.

This standard is a voluntary consensus standard. Its use may become mandatory only when required by a duly constituted legal authority, or when specified in a contractual relationship. To meet specialized needs and to allow innovation, specific changes are permissible when mutually determined by the user and the producer, provided that such changes do not violate existing laws, and are considered technically adequate for the function intended.

When this standard is used on a mandatory basis, the words *shall* and *must* indicate mandatory requirements; the words *should* or *may* refer to matters that are recommended or permissive, but not mandatory.

Suggestions for improvement gained in the use of this standard will be welcome. They should be sent to the American Standards Institute, 1430 Broadway, New York, NY 10018.

This standard was processed and approved for submittal to ANSI by Accredited Standards Committee on Transformers, Regulators, and Reactors, C57. Committee approval of the standard does not necessarily imply that all committee members voted for its approval. At the time it approved this standard, the C57 Committee had the following members:

P. Orehek, Chair
J. D. Borst, Vice Chairman
J. A. Gauthier, Secretary

Copyright National Electrical Manufacturers Association
Provided by IHS under license with NEMA
No reproduction or networking permitted without license from IHS
Not for Resale

Organization Represented	*Name of Representative*
U.S. Dept. of Energy, Western Area Power Administration	Kenneth C. Wolohon
Dept. of Navy, Civil Engineer Corps.	C. M. Mandeville
Dept. of Interior, Bureau of Reclamation	D. J. Mulligan
Dept. of Agriculture, REA	J. A. Bohik
Tennessee Valley Authority	F. Lewis
Electric Light & Power	P. E. Orehek (Chairman) G. Anderson T. Diamantis K. S. Hanus Gary Miller (Alt.) C. G. Niemann J. Sullivan
Institute of Electrical and Electronics Engineers	J. D. Borst (Chairman) W. B. Binder J. H. Harlow J. W. Matthews B. Patel H. Smith (Alt.) T. P. Traub
National Electrical Manufacturers Association	G. Goutler (Chairman) M. Austin S. Endersbe A. Ghafourian (Alt.) P. J. Hopkinson K. R. Linsley R. Plaster (Alt.) H. Robin J. Sims (Alt.)
Underwriters Laboratories, Inc.	M. Schacker

Subcommittee C57.12.1 on Power Transformers, which developed this standard and approved this standard had the following members:

H. Jin Sim, Chair
Stephen Antosz
Ron Barker
Allan Bartek
Don Cash
John Crouse
Dan de la Cruz
Joe Foldi
Dave Aho
Gene Kallaur
Sheldon Kennedy
Russ Nordman
Paulette A. Payne
H. Jin Sim
Chuck Simmons
Felipe Weffer
Jim Harlow

Copyright National Electrical Manufacturers Association
Provided by IHS under license with NEMA
No reproduction or networking permitted without license from IHS
Not for Resale

American National Standard for Transformers—

230 kV and Below 833/958 through 8333/10 417 kVA, Single-Phase, and 750/862 through 60 000/80 000/100 000 kVA, Three-Phase without Load Tap Changing; and 3750/4687 through 60 000/80 000/100 000 kVA with Load Tap Changing—Safety Requirements

1 Introduction and scope

1.1 Introduction

This voluntary consensus standard is intended for use as a basis for performance, interchangeability, and safety of equipment covered, and to assist in the proper selection of such equipment.

1.2 Scope

This standard covers certain electrical, dimensional, and mechanical characteristics and takes into consideration certain safety features of 60-Hz, two-winding, liquid-immersed transformers rated as follows, and used for step-down or step-up purposes:

a) 833/958 through 8333/10 417 kVA, single-phase; 750/862 through 10 000/12 500 kVA, three-phase; high voltage, 2400 through 138 000 volts; low-voltage, 480 through 36 230 volts—without load tap changing;

NOTE—A subgroup of the above group is also identified as three-phase transformers 750-2500 kVA, with distribution BIL characteristics.

b) 12 000/16 000/20 000 through 60 000/80 000/100 000 kVA, three-phase; high voltage, 23 000 through 230 000 volts; low voltage, 4800 through 36 230 volts—without load tap changing;
c) 3750/4687 through 10 000/12 500 kVA, three-phase; high voltage, 6900 through 138 000; low voltage, 2400 through 36 230 volts—with load tap changing;
d) 12 000/16 000/20 000 through 60 000/80 000/100 000 kVA, three-phase; high voltage, 23 000 through 230 000 volts; low voltage, 4800 through 36 230 volts—with load tap changing.

It is not intended that this standard apply to dry-type, regulating, pad-mounted, secondary-network, furnace, rectifier, or mine transformers.

1.3 Mandatory requirements

When this standard is used on a mandatory basis, the words "shall" and "must" indicate mandatory requirements, and the words "should" and "may" refer to matters that are recommended and permitted, respectively, but not mandatory.

NOTE—The Foreword of this standard describes the circumstances under which the document may be used on a mandatory basis.

Copyright National Electrical Manufacturers Association
Provided by IHS under license with NEMA
No reproduction or networking permitted without license from IHS
Not for Resale

2 Referenced and related standards

2.1 Referenced American National Standards

This standard is intended for use in conjunction with the following American National Standards. When the referenced standards are superseded by a revision approved by the American National Standards Institute, Inc, the latest revision shall apply:

ANSI/ASME B1.1-1989, *American National Standard for Unified Inch Screw Threads (UN and UNR Thread Form)*

ANSI C57.12.70-1978, *Terminal Markings and Connections for Distribution and Power Transformers*

ANSI C84.1-1989, *American National Standard Voltage Ratings for Electric Power Systems and Equipment (60 Hz)*

ANSI/ASME B1.20.1-1983, *Pipe Threads, General Purpose (Inch)*

ANSI/IEEE C57.19.00-1991, *General Requirements and Test Procedure for Outdoor Apparatus Bushings*

ANSI/IEEE C57.19.01-1991, *Performance Characteristics and Dimensions for Outdoor Apparatus Bushings*

ANSI/IEEE 100-1992, *The New IEEE Standard Dictionary of Electrical and Electronics Terms*

ANSI/IEEE C37.90.1-1989, *Standard Surge Withstand Capability (SWC) Tests for Protective Relays and Relay Systems*

ANSI/IEEE C57.12.00-1993, *General Requirements for Liquid-Immersed Distribution, Power and Regulating Transformers*

ANSI/IEEE C57.12.80-1978, *Terminology for Power and Distribution Transformers*

ANSI/IEEE C57.13-1993, *Requirements for Instrument Transformers*

ANSI/IEEE C57.91-1995, *Guide for Loading Mineral-Oil-Immersed Transformers*

ANSI/IEEE C57.116-1989, *Guides for Transformers Directly Connected to Generators*

IEEE C57.131-1995, *Requirements for Load Tap Changers*

2.2 Related standard

The following standard is listed for information only and is not essential for the completion of the requirements of this standard:

ANSI/IEEE C57.12.90-1993, *Test Code for Liquid Immersed Distribution, Power, and Regulating Transformers*

3 Terminology

Standard transformer terminology in ANSI/IEEE C57.12.80-1978 shall apply. Other electrical terms are defined in ANSI/IEEE 100-1992.

Copyright National Electrical Manufacturers Association
Provided by IHS under license with NEMA
No reproduction or networking permitted without license from IHS
Not for Resale

4 Rating data

4.1 Usual service conditions

Service conditions shall be in accordance with ANSI/IEEE C57.12.00-1993.

4.2 Kilovolt-ampere ratings

4.2.1 Kilovolt-ampere ratings are continuous and based on not exceeding 65°C average winding temperature rise by resistance and 80°C hottest spot temperature rise, as covered and determined in ANSI/IEEE C57.12.00-1993.

4.2.2 Kilovolt-ampere ratings shall be as listed in Tables 1 and 2.

4.3 Kilovolt-ampere and voltage ratings

Kilovolt-ampere and voltage ratings for self-cooled transformers shall be as listed in Tables 3 through 6.

4.4 Insulation levels

Basic impulse insulation levels (BILs) for transformers shall be as listed in Tables 7 through 9.

4.5 Taps

4.5.1 High voltage winding taps for deenergized operation

The following four high-voltage rated kVA taps shall be provided: two (2) 2.5 percent above rated voltage, and two (2) 2.5 percent below rated voltage. Voltages and currents should be listed in accordance with 5.4.

4.5.2 Taps for load-tap-changing transformers

When a load-tap-changing transformer is specified, load-tap-changing equipment shall be furnished to provide approximately ±10 percent automatic adjustment of the low-voltage winding voltage in approximately 5/8 percent steps, with sixteen steps above and sixteen steps below rated low voltage. The transformer shall be capable of delivering rated kilovolt-amperes at the rated low-voltage position and on all positions above rated low voltage. The transformer shall be capable of delivering low-voltage current corresponding to rated low voltage at all positions below rated low voltage.

4.6 Impedance voltage

4.6.1 Percent impedance voltage

The percent impedance voltage at the self-cooled rating as measured on the rated voltage connection shall be as listed in Table 10.

4.6.2 Tolerance on impedance voltage

The tolerance shall be as specified in ANSI/IEEE C57.12.00-1993.

Copyright National Electrical Manufacturers Association
Provided by IHS under license with NEMA
No reproduction or networking permitted without license from IHS
Not for Resale

4.6.3 Percent departure of impedance voltage on taps for deenergized operation

The percent departure of tested impedance voltage on any tap from the tested impedance voltage at rated voltage shall not be greater than the total tap voltage range expressed as a percentage of the rated voltage.

NOTE—This does not apply to load-tap-changing taps.

4.7 Top-liquid temperature-range limits

The transformer shall be suitable for operation over a range of top-liquid temperatures from -20°C to +105°C, provided the liquid level has been properly adjusted to the indicated 25°C level.

NOTE—Operation at these temperatures may cause the mechanical pressure-vacuum bleeder device (5.7.2) to function to relieve excessive positive or negative pressures.

4.8 Routine tests

4.8.1 "Routine tests" shall be made in accordance with ANSI/IEEE C57.12.00-1993.

4.8.2 On load-tap-changing transformers, additional routine tests for load-tap-changing transformers listed in ANSI/IEEE C57.12.00-1993 shall be made.

Table 1 – Kilovolt-ampere ratings, self-cooled (ONAN)

Single-Phase (kV)	Three-Phase (kVA)	
Without Load Tap Changing	Without Load Tap Changing	With Load Tap Changing
833	750	–
1250	1 000	–
1667	1 500	–
2500	2 000	–
3333	2 500	–
5000	3 750	3 750
6667	5 000	5 000
8333	7 500	7 500
–	10 000	10 000

Table 2 – Kilovolt-ampere ratings, self-cooled (ONAN), forced-cooled first-stage, and forced-cooled second-stage three-phase (with, or without, load tap changing), 12 000-100 000 kVA

ONAN	First-Stage	Second-Stage
12 000	16 000	20 000
15 000	20 000	25 000
20 000	26 667	33 333
25 000	33 333	41 667
30 000	40 000	50 000
37 500	50 000	62 500
50 000	66 667	83 333
60 000	80 000	100 000

Copyright National Electrical Manufacturers Association
Provided by IHS under license with NEMA
No reproduction or networking permitted without license from IHS
Not for Resale

Table 3 – Range of voltage and kilovolt-ampere ratings for single-phase transformers, 833-8333 kVA

High-Voltage Ratings (V)	480	Low-Voltage Ratings (V)			
		2400/4160Y, *2520/4360Y,* **4800/8320Y,** – *5040/8720Y*	*6900/11 950Y,* **7200/12 470Y** *7560/13 090Y,* **7620/13 200Y,** – **7970/13 800Y**	**12 000,** **12 600,** **13 200,** **13 800** *14 400*	**14 400/24 940Y** – **34 500,** **19 920/34 500Y** – *20 920/36 230Y*
		Self-Cooled (ONAN) Kilovolt-Ampere Ratings (kVA)			
2400/4160Y	833	–	–	–	–
4800/8320Y	833	–	–	–	–
6900/11 950Y,	833, 1250	833-2500	–	–	–
6930/12 000Y,	833, 1250	833-2500	–	–	–
7200/12 470Y,	833, 1250	833-2500	–	–	–
7620/13 200Y,	833, 1250	833-2500	–	–	–
7970/13 800Y,	833, 1250	833-2500	–	–	–
12 000, 13 200,	833, 1250	833-2500	–	–	–
13 800	833, 1250	833-2500	–	–	–
23 000	833, 1250	833-2500	833-2500	–	–
34 500	833, 1250	833-2500	833-3333	833-3333	
46 000	833, 1250	833-2500	833-8333	833-8333	2500-8333
69 000	–	833-2500	833-8333	833-8333	2500-8333
115 000	–	2500	2500-8333	2500-8333	2500-8333
138 000	–	2500	2500-8333	2500-8333	2500-8333

NOTES

1 All voltages are Δ unless otherwise indicated.

2 Kilovolt-ampere ratings separated by a dash indicate that all the intervening ratings listed in Table 1 are included. Kilovolt-ampere ratings separated by a comma indicate that only those listed are included.

3 Bold type-voltages listed in ANSI C84.1-1989.

4 Italics type-voltages not listed in ANSI C84.1-1989.

Copyright National Electrical Manufacturers Association
Provided by IHS under license with NEMA
No reproduction or networking permitted without license from IHS
Not for Resale

Table 4 – Range of voltage and kilovolt-ampere ratings for three-phase transformers, without load tap changing 750-10 000 kVA

	Low-Voltage Ratings (V)					
High Voltage Ratings (V)	**480Y/277, 480**	**2400, *2520* 4160Y/2400, *4360Y/2520***	**4800, *5040,* 8320Y/4800, *8720Y/5040***	**6900, 7200, *7560,* 12 470Y/7200, *13 090Y/7560,* 13 200Y/7620, 13 800Y/7970,**	**13 800, 12 000, *12 600,* 13 200, *14 400***	**24 940GrdY/14 000 34 500, 34 500GrdY/19 920, *36 230GrdY/20 920***
	Self-Cooled (ONAN) Kilovolt-Ampere Ratings (kVA)					
2400	750-1500	–	–	–	–	–
4160,4800	750-1500	–	–	–	–	–
6900,7200	750-2500	1000-3750	–	–	–	–
12 000	750-2500	1000-7500	–	–	–	–
12 470	750-2500	1000-7500	–	–	–	–
13 200	750-2500	1000-7500	–	–	–	–
13 800	750-2500	1000-7500	–	–	–	–
23 000	750-2500	1000-7500	1000-10 000	1000-10 000	–	–
34 500	750-2500	1000-7500	1000-10 000	1000-10 000	1000-10 000	–
46 000	–	1500-7500	1500-10 000	1500-10 000	1500-10 000	5000-10 000
69 000	–	1500-7500	1500-10 000	1500-10 000	1500-10 000	5000-10 000
115 000	–	5000-7500	5000-10 000	5000-10 000	5000-10 000	5000-10 000
138 000	–	5000-7500	5000-10 000	5000-10 000	5000-10 000	5000-10 000

NOTES
1 All voltages are Δ, unless otherwise indicated.
2 Kilovolt-ampere ratings separated by a dash indicate that all the intervening ratings listed in Table 1 are included.
3 Bold type – voltages listed in ANSI C84.1-1989.
4 Italics type – voltages not listed in ANSI C84.1-1989.

Copyright National Electrical Manufacturers Association
Provided by IHS under license with NEMA
No reproduction or networking permitted without license from IHS
Not for Resale

Table 5 – Range of voltage and kilovolt-ampere ratings for three-phase transformers with load tap changing, 3750-10 000 kVA

	Low-Voltage Ratings (V)					
High Voltage Ratings (V)	**2400**, *2520* **4160Y/2400**, *4360Y/2520*	**4800**, *5040*, **8320Y/4800**, *8720Y/5040*	**6900**, **7200**, *7560*, **12 470Y/7200**, *13 090Y/7560*, **13 200Y/7620**, **13 800Y/7970**	**13 800**, **12 000**, *12 600*, **13 200**, *14 400*	**24 940GrdY/14 400**	**24 940 GrdY/14 400** **34 500**, **34 500GrdY/19 920**, *36 230GrdY/20 920*
	Self-Cooled (ONAN) Kilovolt-Ampere Ratings (kVA)					
6900,7200	3750	–	–	–	–	–
12 000	3750-7500	–	–	–	–	–
12 470	3750-7500	–	–	–	–	–
13 200	3750-7500	–	–	–	–	–
13 800	3750-7500	–	–	–	–	–
23 000	3750-7500	3750-10 000	3750-10 000	–	–	–
34 500	3750-7500	3750-10 000	3750-10 000	3750-10 000	–	–
46 000	3750-7500	3750-10 000	3750-10 000	3750-10 000	5000-10 000	5000-10 000
69 000	3750-7500	3750-10 000	3750-10 000	3750-10 000	5000-10 000	5000-10 000
115 000	5000-7500	5000-10 000	5000-10 000	5000-10 000	5000-10 000	5000-10 000
138 000	5000-7500	5000-10 000	5000-10 000	5000-10 000	5000-10 000	5000-10 000

NOTES
1 All voltages are Δ, unless otherwise indicated.
2 Kilovolt-ampere ratings separated by a dash indicate that all the intervening ratings listed in Table 1 are included.
3 Bold type – voltages listed in ANSI C84.1-1989.
4 Italics type – voltages not listed in ANSI C84.1-1989.

Table 6 – Range of voltage and kilovolt-ampere ratings for three-phase transformers with, or without, load tap changing, 12 000-60 000 kVA

	Low-Voltage Ratings (V)				
High Voltage Ratings (V)	**4800**, *5040*, **8320Y/4800**, *8720Y/5040*	**6900,7200**,*7560*, **12 470Y/7200**, *13 090Y/7560*, *13 200Y/7620*, **13 800Y/7970**	**12 000**, *12 600*, **13 200**, **13 800**, *14 400*	**24 940GrdY/14 400**	**34 500**, **34 500GrdY/19 920**, *36 230GrdY/20 920*
	Self-Cooled (ONAN) Kilovolt-Ampere Ratings (kVA)				
23 000	12 000-15 000	12 000-30 000	–	–	–
34 500	12 000-15 000	12 000-30 000	12 000-30 000	–	–
46 000	12 000-15 000	12 000-30 000	12 000-30 000	–	–
69 000	12 000-15 000	12 000-30 000	12 000-30 000	–	–
115 000	12 000-15 000	12 000-60 000	12 000-60 000	12 000-60 000	12 000-60 000
138 000	12 000-15 000	12 000-60 000	12 000-60 000	12 000-60 000	12 000-60 000
161 000	12 000-15 000	12 000-60 000	12 000-60 000	12 000-60 000	12 000-60 000
230 000	12 000-15 000	12 000-60 000	12 000-60 000	12 000-60 000	12 000-60 000

NOTES
1 All voltages are Δ, unless otherwise indicated.
2 Kilovolt-ampere ratings separated by a dash indicate that all the intervening ratings listed in Table 2 are included.
3 Bold type – voltages listed in ANSI C84.1-1989.
4 Italics type – voltages not listed in ANSI C84.1-1989.

Copyright National Electrical Manufacturers Association
Provided by IHS under license with NEMA
No reproduction or networking permitted without license from IHS
Not for Resale

Table 7 – High-voltage winding insulation levels of single-phase transformers

High-Voltage Ratings (V)	Basic Impulse Insulation Level (kV)
2400/4160Y	75
4800/8320Y	95
6900/11 950Y	110
7200/12 470Y	110
7620/13 200Y	110
12 000	110
13 200	110
13 800	110
23 000	150
34 500	200
46 000	250
69 000	350
115 000	450
138 000	550

NOTES
1 All voltages are Δ, unless otherwise indicated.
2 Bold type - voltages listed in ANSI C84.1-1989.
3 Italics type - voltages not listed in ANSI C84.1-1989.

Table 8 – High-voltage winding insulation levels of three-phase transformers

High-Voltage Ratings (V)	Basic Impulse Insulation Level (kV)	
	Distribution Transformers	Power Transformers
2 400	45	60
4 160	60	75
4 800	60	75
6 900	75	95
7 200	75	95
12 000	95	110
13 200	95	110
13 800	95	110
23 000	125	150
34 500	150	200
46 000	–	250
69 000	–	350
115 000	–	450
138 000	–	550
161 000	–	650
230 000	–	750

NOTES
1 All voltages are Δ unless otherwise indicated.
2 Distribution BILs only applicable to non-load-tap-changing transformers.

Copyright National Electrical Manufacturers Association
Provided by IHS under license with NEMA
No reproduction or networking permitted without license from IHS
Not for Resale

Table 9 – Low-voltage winding insulation levels

Voltage Ratings (V)		Basic Impulse Insulation Level (kV)	
Single-Phase	Three-Phase	Distribution Transformers	Power Transformers
480	**480Y/277, 480**	30	45
–	**2400,** *2520*	45	60
2400/4160Y, *2520/4360Y*	**4160Y/2400,** *4360Y/2520,* **4800,** *5040*	60	75
4800/8320Y, ***5040/8720Y***	**6900, 7200,** *7560,* **8320Y/4800,** *8720Y/5040*	75	95
6900/11 950Y, **7200/12 470Y,** *7560/13 090Y,* **7620/13 200Y** **7970/12 800Y, 12 000, 12 600, 13 200,** *14 400,* **13 800**	**12 000,** *12 600,* **13 200, 13 800,** *14 400,* **12 470Y/7200,** *13 090Y/7560,* **13 200Y/7620,13 800Y/7970**	-	110
14 400/24 940Y	**24 940GrdY/14 400**	-	150
34 500	34 500	-	200
19 920/34 500Y	**34 500GrdY/19 920,**	-	200
20 920/36 230Y	*36 230GrdY/20 920*	-	200

NOTES
1 All voltages are phase-to-phase, unless otherwise indicated.
2 Distribution BILs only applicable to non-load-tap-changing transformer.
3 Bold type – voltages listed in ANSI C84.1-1989.
4 Italics type – voltages not listed in ANSI C84.1-1989.

Table 10 – BILs and percent impedance voltages at self-cooled (ONAN) rating

	Without Load Tap Changing		With Load Tap Changing
High-Voltage BIL (kV)	Low Voltage 480 V	Low Voltage 2400 V and Above	Low Voltage 2400 V and Above
60–110	5.75*	5.5*	–
150	6.75	6.5	7.0
200	7.25	7.0	7.5
250	7.75	7.5	8.0
350	–	8.0	8.5
450	–	8.5	9.0
550	–	9.0	9.5
650	–	9.5	10.0
750	–	10.0	10.5

* For transformers greater than 5000 kVA self-cooled, these values shall be the same as those shown for 150 kV HV BIL.

Copyright National Electrical Manufacturers Association
Provided by IHS under license with NEMA
No reproduction or networking permitted without license from IHS
Not for Resale

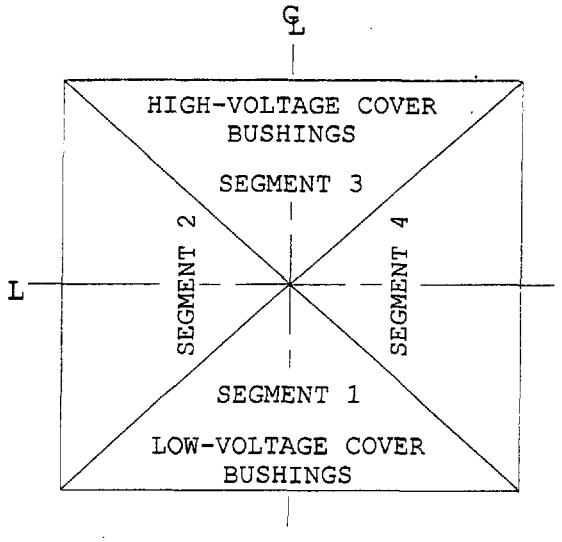

Accessories	Locations	Section
Tap-changer operating handle	S1, S4, See Ref	5.1.1
*Liquid-level indicator	S1	5.1.2
*Liquid-temperature indicator	S1	5.1.3
Drain and filter valves	S1	5.1.5
Nameplate	S1	5.4
*Pressure-vacuum gauge	S1	5.1.4
Jacking facilities	See Ref	5.3.4
Ground pad(s)	See Ref	5.5
†Load-tap-changing equipment	S1 or S2	6
†Auxiliary cooling control	S1 or S2	5.9

*Not furnished for transformers with distribution BIL characteristics 200 kV and below.
†When furnished.

NOTE—Some designs include accessories and wiring connections as part of the load-tap-changing equipment assembly. When this is the case, accessories may be located in the same segment as the load tap changer and may be viewed parallel to the segment centerline.

Figure 1 – Accessories

5 Construction

5.1 Accessories

The accessories shall be as listed in Figure 1.

Accessories listed 5.1.1 through 5.1.5 shall be included and located as shown in Figures 1 or 2.

See Table 11 for information on accessories and construction features to be provided on transformers of various sizes.

5.1.1 Tap changer

A tap changer for de-energized operation with the operating handle brought out through the side of the tank in segment 1 or 4 at a height convenient to the transformer design, shall be provided. If for design reasons it cannot be located in segment 1 or 4, it may be located in the sidewall of one of the other segments.

The tap-changer handle shall have provision for padlocking, and shall provide visible indication of the tap position without unlocking. A hole with a minimum diameter of 9.5 mm (3/8 inch) shall be provided for the padlock.

The plate indicating tap-changer position shall be marked with letters or Arabic numerals in sequence.

The letter "A" or the Arabic numeral "1" shall be assigned to the voltage rating providing the maximum ratio of transformation.

Copyright National Electrical Manufacturers Association
Provided by IHS under license with NEMA
No reproduction or networking permitted without license from IHS
Not for Resale

5.1.2 Liquid-level indicator

A level gage with vertical face shall be mounted on the side of the tank and shall be readable to a person standing at the level of the base.

The gage shall have a dark-face dial with light markings and a light-colored indicating hand. The diameter of the dial (inside bezel) shall be:

a) 82.6 mm (3-1/4 inches) ± 6.4 mm (1/4 inch) when the 25°C liquid level is more than 2.44 m (96 inches) or less above the bottom of the base;

b) 140 mm (5-1/2 inches) ± 12.7 mm (1/2 inch) when the 25°C liquid level is 2.44 m (96 inches) above the bottom of the base.

Dial markings shall show the 25°C level and the minimum and maximum operating levels.

The words "Liquid Level" shall be on the dial or on a suitable nameplate adjacent thereto.

The 25°C liquid level shall also be shown by suitable permanent markings on the tank or by an indication on the nameplate of the distance from the liquid level to the highest point of the handhole or manhole flange surface.

The change in liquid level per 10°C change in temperature shall be indicated on the nameplate.

5.1.3 Liquid-temperature indicator

A dial-type thermometer shall be mounted on the side of the tank.

For mounting heights 2.44m (96 inches) or less from the bottom of the base, the face of the thermometer shall be mounted in a vertical plane; for mounting heights greater than 2.44 m (96 inches), the face shall be at an angle of 30 degrees from the vertical.

The thermal element shall be mounted in a closed well at a suitable level to indicate the top-liquid temperature. For dimensions of the well, see ANSI/IEEE C57.12.00-1993.

The thermometer shall have a dark-face dial with light markings, a light-colored indicating hand, and an orange-red maximum indicating hand, with provision for resetting. The diameter of the dial (inside bezel) shall be 114 mm (4-1/2 inches) ± 25.4 mm (1 inch). The dial markings shall cover a range of 0°C to 120°C.

The words "Liquid Temperature" shall be on the dial or on a suitable nameplate mounted adjacent to the indicator.

5.1.4 Pressure-vacuum gage

A pressure-vacuum gage shall be provided for transformers above 2500 kVA, or above 200 kV BIL.

The diameter of the dial (inside bezel) shall be 88.9 mm (3-1/2 inches) ± 6.4 mm (1/4 inch). The gage shall have a dark-face dial with light-colored markings and a light-colored pointer, and it shall be located either in segment 1 or in that half of segment 4 that is adjacent to segment 1.

The scale range for the pressure-vacuum gage shall be between 10 psi (69 kPa), positive and negative.

Copyright National Electrical Manufacturers Association
Provided by IHS under license with NEMA
No reproduction or networking permitted without license from IHS
Not for Resale

5.1.5 Drain and filter valves

A combination drain and lower filter valve shall be located on the side of the tank in segment 1. This valve shall provide for drainage of the liquid to within 25.4 mm (1 inch) of the bottom of the tank.

The drain valve shall have a built-in 9.5 mm (3/8-inch) sampling device, which shall be located in the side of the valve between the main valve seat and the pipe plug.

The sampling device shall be supplied with a 7.9 mm (5/16-inch) - 32 male thread for the user's connection and shall be equipped with a cap.

The size of the drain valve shall be 25.4 mm (1 inch) for transformers through 2500 kVA and 50.8 mm (2 inches) for the larger kilovolt-ampere ratings, and shall have tapered pipe threads (National Pipe Thread), in accordance with ANSI/ASME B1.20.1-1983, with a pipe plug in the open end.

Transformers through 2500 kVA shall have a 25.4-mm (1-inch) upper filter plug, or cap, located above the maximum liquid level in segment 1.

Transformers above 2500 kVA shall have an upper filter valve located below the 25°C liquid level in segment 1. The size of the upper filter valve shall be 25.4 mm (1 inch), and the upper filter valve shall have 25.4 mm (1-inch) threads, in accordance with ANSI/ASME B1.20.1-1983, with a pipe plug in the open end.

5.2 Bushings

The insulation level of line bushings shall be equal to or greater than the insulation level of the windings to which they are connected.

The insulation level of the low-voltage neutral bushing on three-phase transformers having a Y-connected low-voltage winding shall be the same as that of the low-voltage line bushings for windings 15 kV and below. For windings above 15 kV, a 15-kV neutral bushing with 110-kV BIL shall be provided.

Unless otherwise specified, bushings shall be mounted on the cover and located as shown in Figure 2.

5.2.1 Electrical characteristics of outdoor transformer bushings shall be as listed in ANSI/IEEE C57.12.00-1993 for bushings with a nominal system voltage of 8.7 kV and below, or as listed in ANSI/IEEE C57.19.00-1991 and ANSI/IEEE C57.19.01-1991 for bushings with nominal system voltage of 15 kV and above.

5.2.2 Bushings for use with outdoor power transformers shall have dimensions as listed in ANSI/IEEE C57.19.00-1991 and ANSI/IEEE C57.19.01-1991.

5.2.3 Four cover bushings shall be provided for each permanently connected Y-winding on three-phase transformers.

Copyright National Electrical Manufacturers Association
Provided by IHS under license with NEMA
No reproduction or networking permitted without license from IHS
Not for Resale

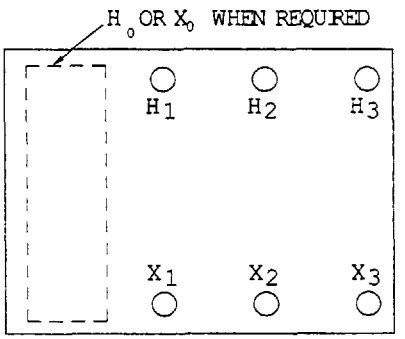

NOTE—For single phase transformers, omit H3, X3, and neutral bushings.

Figure 2 – Bushing Arrangement

5.3 Lifting, moving, and jacking facilities

5.3.1 Safety factor

Lifting, moving, and jacking facilities shall be designed to provide a safety factor of 5. This safety factor is the ratio of the ultimate stress of the material used to the working stress. The working stress is the maximum combined stress developed in the lifting facilities by the static load of the component being lifted. This does not apply to pulling facilities since the unit is not suspended. For pulling, a safety factor of 2.0 is acceptable.

5.3.2 Lifting facilities

Lifting facilities shall be provided for lifting the cover separately and, also, for lifting the core and coil assembly from the tank using four lifting cables.

Facilities for lifting the complete transformer (with the cover securely fastened in place) shall be provided. Lifting facilities shall be designed for lifting with four vertical slings. (For large transformers, the use of spreaders or a lifting beam may be involved.) The bearing surfaces of the lifting facilities shall be free from sharp edges and shall be provided with a hole having a minimum diameter of 20.6 mm (13/16 inch) for guying purposes.

Copyright National Electrical Manufacturers Association
Provided by IHS under license with NEMA
No reproduction or networking permitted without license from IHS
Not for Resale

Table 11 – "Basic standard" construction features

Section	Items	kVA, ONAN Ratings				
		Without Load Tap Changing			With Load Tap Changing	
		750–2500 DIST BILs	750–10 000 POWER BILs	12 000–60 000 POWER BILs	3750–10 000 POWER BILs	12 000–60 000 POWER BILs
5.1	Accessories					
5.1.1	Tap-Changer	S	S	S	S	S
5.1.2	Liquid-Level Indicator	A	S	S	S	S
5.1.3	Liquid-Temperature Indicator	A	S	S	S	S
5.1.4	Pressure-Vacuum Gage	A	S	S	S	S
5.1.5	Drain and Filter Valves (or Conn)	S	S	S	S	S
5.2	Bushings	S	S	S	S	S
5.3	Lifting, Moving, and Jacking Facilities	S	S	S	S	S
5.3.4	Jacking Facilities	–	S	S	S	S
5.4	Nameplate	S	S	S	S	S
5.5	Ground Pad(s)	S	S	S	S	S
5.6	Polarity, Angular Displacement, and Terminal Markings	S	S	S	S	S
5.7.1	Oil Preservation	S	S	S	S	S
5.7.2	Pressure-Vacuum Bleeder	A	S	S	S	S
5.8	Tanks	S	S	S	S	S
5.9	Auxiliary Cooling Equipment	A	A	A	A	A
5.9.1	Controls for Auxiliary Cooling Equipment	A	A	A	A	A
5.9.2	Fans	A	A	A	A	A
5.9.3	Pumps	–	–	A	–	A
5.10	Auxiliary Equipment Power Supply	A	A	A	A	A
6	Load-Tap-Changing Equipment	–	–	–	S	S
6.1	Load Tap Changer	–	–	–	S	S
6.2	Arcing Tap Switch	–	–	–	S	S
6.3	Motor-Drive Mechanism	–	–	–	S	S
6.4	Position Indicator	–	–	–	S	S
6.5	Operation Counter	–	–	–	S	S
6.6	Automatic Control Equipment	–	–	–	S	S

"S" indicates "standard"
"A" indicates "available when specified"

Copyright National Electrical Manufacturers Association
Provided by IHS under license with NEMA
No reproduction or networking permitted without license from IHS
Not for Resale

5.3.3 Moving facilities

The base of the transformer shall be of heavy plate or have members forming a rectangle that will permit rolling or skidding in the directions of the centerlines of the segments.

The points of support shall be so located that the center of gravity of the transformer as prepared for shipment will not fall outside these points of support when the base is tilted 15 degrees or less from the horizontal, with or without oil in the transformer.

Provision shall be made on or adjacent to the base for pulling the transformer parallel to the centerline of segments 1 and 3, and to the centerline of segments 2 and 4.

The base shall be constructed so that the external edges on all four sides are rounded or sloped upward at an angle of approximately 45 degrees.

5.3.4 Jacking facilities

Jacking facilities shall be located near the extreme ends of the junctions of the segments.

For transformers above 2500 kVA, dimensions and clearances for jacking provisions shall be as shown in Figure 3.

5.4 Nameplate

The nameplate shall conform to the requirements of nameplate C as described in ANSI/IEEE C57.12.00-1993. It shall be located in segment 1 near the centerline and near eye level. It may be located in segment 2 when load-tap-changing equipment is located in segment 2.

For load-tap-changing transformers, the words "load-tap-changing transformer" shall be used instead of the word "transformer."

Voltage and current ratings shall be given as follows:

0 to	99.9	to nearest 0.1
100 to	999	to nearest 1
1 000 to	9 999	to nearest 5
10 000 to	99 999	to nearest 10
100 000 and greater		to nearest 25

5.5 Ground pads

5.5.1 A tank-grounding pad shall consist of a copper-faced steel pad or a stainless-steel pad without copper facing, 50.8 mm × 88.9 mm (2 inches × 3-1/2 inches), with two holes horizontally spaced on 44.5-mm (1-3/4-inch) centers and drilled and tapped for 12.7 mm (1/2 inch) -13 Unified National Coarse thread (UNC), as defined in ANSI B1.1-1982. Minimum thickness of the copper facing shall be 0.4 mm (0.015 inch). Minimum threaded depth of the holes shall be 12.7 mm (1/2 inch). Thread protection for the ground pad shall be provided.

The ground pad shall be welded on the base or on the tank wall near the base. If the base is detachable, the ground pad shall be located on the tank wall.

5.5.2 Transformers 2500 kVA and smaller shall be provided with one ground pad available for connection to a neutral (if present) or near the low-voltage (LV) bushings.

Copyright National Electrical Manufacturers Association
Provided by IHS under license with NEMA
No reproduction or networking permitted without license from IHS
Not for Resale

5.5.3 Transformers larger than 2500 kVA shall have one ground pad located toward the extreme left of segment 1 and another diagonally opposite in segment 3, located in such a way as not to interfere with the jacking facilities.

5.6 Polarity, angular displacement, and terminal markings

5.6.1 Polarity

All single-phase transformers shall have subtractive polarity.

5.6.2 Angular displacement

The angular displacement between high-voltage and low-voltage terminal voltages of three-phase transformers with Δ-Δ connections shall be 0 degrees.

The angular displacement between high-voltage and low-voltage terminal voltages of three-phase transformers with Y-Δ or Δ-Y connections shall be 30 degrees, with the low voltage lagging the high voltage as shown in Figure 4.

Phasor relations shall be as shown in Figure 4.

5.6.3 Terminal markings

External terminals shall be marked in accordance with ANSI C57.12.70-1978. The high-voltage and low-voltage bushing arrangements shall be as shown in Figure 2.

5.7 Liquid preservation

5.7.1 Sealed-tank system

A sealed-tank system shall be provided.

NOTE—A sealed-tank system is one in which (1) the interior of the transformer will be sealed from the atmosphere throughout a top liquid temperature range of 100°C, and (2) the gas plus liquid volume will remain constant so that the internal gas pressure will not exceed 10 psi (69 kPa) gage positive or 8 psi (55.2 kPa) gage negative.

5.7.2 Pressure-vacuum bleeder

A pressure-vacuum bleeder device set to operate at the maximum operating pressures (positive and negative) indicated on the nameplate shall be furnished on transformers 2500 kVA and larger with power transformer BILs.

A pressure-vacuum bleeder device shall not be furnished on transformers 2500 kVA and smaller with distribution transformer BILs.

Copyright National Electrical Manufacturers Association
Provided by IHS under license with NEMA
No reproduction or networking permitted without license from IHS
Not for Resale

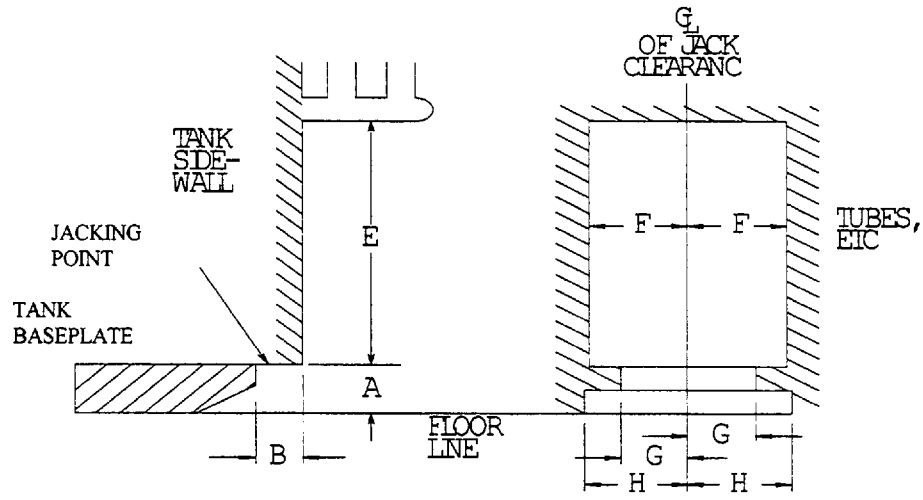

	Weight 35,000 lb (15,900 kg) or less			Weight 35,000-65,000 lb (15,900-29,500 kg)			Weight over 65,000 lb (29,500 kg)	
A	88.9 mm	3-1/2 in	A	127 mm	5 in	A	457 mm	18 in
B	63.5 mm	2-1/2 in	B	63.5 mm	2-1/2 in	B	102 mm	4 in
E	686 mm	27 in	E	686 mm	27 in	E	508 mm	20 in
F	127 mm	5 in	F	127 mm	5 in	F	127 mm	5 in
G	76.2 mm	3 in	G	76.2 mm	3 in	G	76.2 mm	3 in
H	127 mm	5 in	H	127 mm	5 in	H	127 mm	5 in

NOTES
1 Dimensions E, F, G, and H are free clearances.
2 Where required in manufacturer's standard designs, any dimensions may be in excess of those shown.
3 E applies to nonremovable coolers only.
4 Weight includes completely assembled transformer and fluid.

Figure 3 – Provision for jacking (transformers above 2500 kVA)

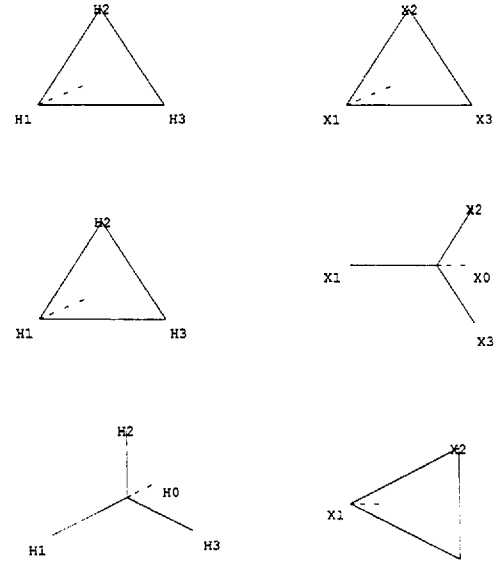

Figure 4 – Angular displacement

Copyright National Electrical Manufacturers Association
Provided by IHS under license with NEMA
No reproduction or networking permitted without license from IHS
Not for Resale

5.8 Tanks

5.8.1 Maximum operating pressures (positive and negative) for which the transformer is designed shall be indicated on the nameplate. The completely assembled transformers shall be designed to withstand, without permanent deformation, a pressure 25 percent greater than the maximum operating pressure.

5.8.2 Tanks shall be designed for vacuum filling (external pressure of one atmosphere, essentially full vacuum) in the field (1) on all transformers with high-voltage insulation levels of 350 kV BIL and above, and (2) on all transformers rated 10 000 kVA and above, regardless of BIL.

5.8.3 A welded main cover shall be provided. Handholes or manholes shall be provided in the cover. Handholds, if circular, shall be a minimum of 9 inches (229 mm) in diameter. If rectangular, they shall be at least 114 mm (4-1/2 inches) wide and shall have an area of at least 41 900 mm^2 (65 square inches). Manholes, if circular, shall be a minimum of 381 mm (15 inches) in diameter. If rectangular or oval, they shall have minimum dimensions of 254 mm × 406 mm (10 inches × 16 inches).

A pressure-relief device shall be provided on the cover for transformer above 2500 kVA or above 200 kV BIL.

5.8.4 In load-tap-changing transformers, if the arcing tap switch has components that involve direct arcing in liquid, these components shall be located in a compartment sealed in such a way as to prevent transfer of liquid to any other compartment or to the main tank.

5.9 Auxiliary cooling equipment

5.9.1 Control of auxiliary cooling equipment

5.9.1.1 The equipment for automatic control of auxiliary cooling equipment controlled from the top-liquid temperature shall consist of:

a) A thermally operated control device with the thermal element mounted in a well and responsive to the top-liquid temperature of the transformer;

b) A manually operable switch connected in parallel with the automatic control contacts and enclosed in a weather-resistant cabinet located on the side of the tank of segment 1, at a height not greater than 1.52 m (60 inches) above the base;

c) A relay for control shall be mounted inside the cabinet.

5.9.1.2 When specified, or for transformers with forced-cooled ratings of 133 percent or greater of the self-cooled (ONAN) rating, the equipment for automatic control of auxiliary cooling equipment for transformers shall be controlled from the winding temperature and shall consist of:

a) A winding-temperature simulator device with a thermal element mounted in a well and responsive to the simulated winding hottest spot temperature of the transformer;

   1) The winding-temperature simulator shall be a dial-type instrument and shall be mounted on the side of the tank in segment 1. For mounting heights of 2.44 m (96 inches) or less from the bottom of the base, the face of the instrument shall be mounted in a vertical plane. For mounting heights greater than 2.44 m (96 inches), the face shall be at an angle of 30 degrees from the vertical.

   2) The instrument shall be direct-stem-mounted in a closed well at a suitable level. The dimensions of well shall be as specified in ANSI/IEEE C57.12.00-1993.

   3) The instrument shall have a dark-face dial with light markings, a light-colored indicating hand, and an orange-red maximum indicating hand, with provision for resetting. The diameter of the

Copyright National Electrical Manufacturers Association
Provided by IHS under license with NEMA
No reproduction or networking permitted without license from IHS
Not for Resale

dial (inside bezel) shall be 114 mm (4-1/2 inches) ± 25.4 mm (1 inch). The dial markings shall cover a range of 0°C to 180°C.

4) The words "Winding Temperature" shall be on the dial or on a suitable nameplate mounted adjacent to the simulator.

5) The simulator shall have three sets of alarm contacts in accordance with clause 7, and with factory temperature settings as follows:

Contact	Function
1	Supply power to first-bank cooling
2	Supply power to second-bank cooling
3	Initiate alarm or actuate relay

b) A manually operable switch connected in parallel with the automatic control contacts and enclosed in a weather-resistant cabinet located on the side of the tank in segment 1, at a height not greater than 1.52 m (60 inches) above the base;

c) A relay for control shall be mounted inside the cabinet.

5.9.2 Fans

Fan motors shall be 240 volts, 60 Hz, single phase, without centrifugal switch, and shall be individually fused or otherwise thermally protected.

If the power supply for 240-volt single-phase motors is not available, provisions shall be made to accommodate another single-phase motor supply voltage in accordance with ANSI C84.1-1989, not in excess of 600 volts.

NOTE—See 9.9 for provisions for future fans.

5.9.3 Pumps

Pump motors shall be 240 volts, 60 Hz, single phase, without centrifugal switch, and shall be individually fused or otherwise thermally protected.

Pump facilities shall include valves to allow removal of the pump with minimum loss of insulating oil.

5.10 Power supply for transformer auxiliary equipment and controls

The power supply voltage for the transformer auxiliary equipment and controls should be specified and provided by the user. It should be in accordance with ANSI C84.1-1989.

The voltage rating for auxiliary equipment and controls supplied with the transformer should also be in accordance with ANSI C84.1-1989.

6 Basic construction features—load-tap-changing equipment

6.1 Load-tap-changing equipment

The load-tap-changing equipment shall consist of a liquid-immersed arcing tap switch or a tap selector and an arcing switch, a motor mechanism, and automatic control devices located in segment 1 or 2. The load-tap-changing equipment shall meet the IEEE C57.131 requirements.

Copyright National Electrical Manufacturers Association
Provided by IHS under license with NEMA
No reproduction or networking permitted without license from IHS
Not for Resale

6.2 Arcing tap switch

The arcing switch, or tap selector and arcing switch, shall have the following features:

a) Components of the arcing tap switch that involve direct arcing in liquid shall be located in one or more liquid-filled compartments with a removable bolted cover, or covers, for access to such components without opening the main tank or lowering the liquid in the main tank. Covers weighing more than 20.4 kg (45 pounds) shall be hinged and removable. Covers weighing 20.4 kg (45 pounds) or less shall have handles. Provisions shall be made for the escape of gas produced by the arcing.

b) A drain valve shall be located in the bottom of each oil-filled compartment to provide complete oil drainage. The size of the drain valve shall be 25.4 mm (1 inch), and the drain valve shall have 25.4- mm (1-inch) tapered pipe threads (National Pipe Thread) in accordance with ANSI/ASME B1.20.1-1983, with a pipe plug in the open end. The drain valve shall have a built-in 9.5-mm (3/8-inch) sampling device, which shall be located on the side of the valve between the main valve seat and the pipe plug. The device shall be supplied with a 7.9-mm (5/16-inch-32) male thread for the user's connection and shall be equipped with a cap. A 25.4-mm (1-inch) filling plug shall be located in the top of each oil-filled compartment.

c) A magnetic liquid-level gage with a vertical face shall be mounted on the side of each oil-filled compartment. For details see 5.1.2.

6.3 Motor-drive mechanism

The motor-drive mechanism shall have the following features:

a) A single-phase, 60-Hz motor without centrifugal switch suitable for operation from a 240/120-volt, three-wire source shall be provided.

NOTE—The power source for the motor drive and for operating forced-air-cooling fans (when fans are included) shall be 240/120 volts, three wire, single phase, 60 Hz, with maximum voltage to ground not to exceed 150 volts. This power source shall be provided by the user and shall be separate from the transformer.

b) A hand crank or spoke-type handwheel for manual operation of the driving mechanism shall be provided. The hand crank or spoke-type handwheel shall be electrically interlocked to prevent operation by the motor while the crank or spoke-type handwheel is engaged. A place for storing the hand crank or spoke-type handwheel, if detachable, shall be provided.

NOTE—The manual handcrank operation is not designed to be suitable for operation of the load tap changer under load.

c) Mechanically operated electric limit switches and mechanical stops shall be provided on the drive mechanism to prevent overtravel beyond the maximum raise and lower positions.

6.4 Position indicator

A position indicator for the load tap changer with maximum and minimum indicating hands and provisions for resetting for a person standing at the base of the transformer shall be provided. The indicator shall be readable from the base of the transformer and shall be so located that it can be read while the load tap changer is operated by hand. The position indicator shall be marked in accordance with the following:

a) The normal (rated low-voltage) position shall be located on the vertical centerline of the dial, preferably at the top of the dial, and shall be indicated by the letter "N."

b) The raise range, when referred to the regulated (low-voltage) circuit, shall be located on the right-hand portion of the dial. A larger letter "R" (Raise), appearing only once, shall be located in the right-hand half with an arrow indicating the direction of raise. The sixteen tap positions in the raise

Copyright National Electrical Manufacturers Association
Provided by IHS under license with NEMA
No reproduction or networking permitted without license from IHS
Not for Resale

range shall be marked, and a number shall appear opposite at least every fourth position. Number 16 shall be the highest voltage position (see Figure 5).

c) The lower range, when referred to the regulated (low-voltage) circuit, shall be located on the left-hand portion of the dial. A large letter "L" (Lower), appearing only once, shall be located in the left-hand half with an arrow indicating the direction of lower. The sixteen tap positions in the lower range shall be marked, and a number shall appear opposite at least every fourth position. Number 16 shall be the lowest voltage position (see Figure 5).

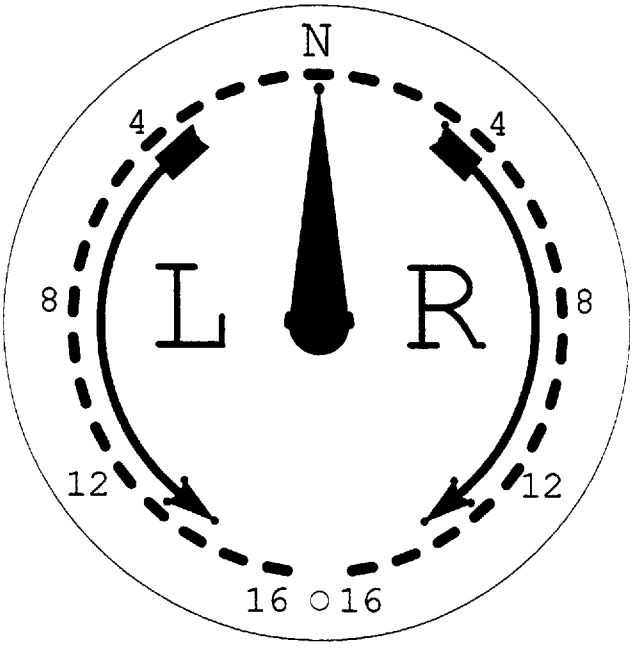

NOTE—This figure is intended to present a schematic rather than a pictorial illustration of the dial face. For detailed specifications, see 6.4

Figure 5 – Position indicator for load tap changer

6.5 Control equipment and accessories

Control devices to facilitate manual and automatic control of the load tap changing equipment shall be provided.

The load tap changing control system is composed of sensing apparatus to provide signals proportioned to the system voltage and load current and a control device to interpret the inputs of the sensing apparatus. Relate this input to conditions desired by the operator, and automatically command the load tap changer to function to hold the output thereby required.

The control system is usually furnished with a sensing apparatus pertaining to the load current and with a control device to interpret the inputs. The sensing apparatus pertaining to the system voltage is usually not provided as part of the transformer control equipment. The usual *stand-alone* nature of the control device portion of the control system makes it appropriate to consider the control system in a unified manner.

6.5.1 Enclosure

A weather-resistant cabinet shall be provided for housing the automatic control and related devices. The cabinet shall be equipped with breather, hinged doors, and provision for entrance of up to three 38.1 mm

Copyright National Electrical Manufacturers Association
Provided by IHS under license with NEMA
No reproduction or networking permitted without license from IHS
Not for Resale

(1 ½ inch) conduits in the bottom. The doors shall provide access to the control and accessory devices and shall have provision for padlocking consisting of matching holes having a minimum diameter of 9.5 mm (3/8 inch). Space shall be provided for mounting the control equipment required for parallel operation by the circulating current method. See Figure 7 for one implementation of this control.

6.5.2 Instrument transformers

6.5.2.1 Current transformers

The manufacturer shall furnish current transformer(s) such as to deliver not less than 0.15 A and not more than 0.2 A to the control circuits when the transformer is operating at the maximum continuous current for which it is designed, including increases that may be obtained by normal cooling modifications.

For a wye connected winding, the current transformer(s) shall deliver to the line drop compensator a current which is nominally in phase with the current at the X1 load terminal of the transformer.

For a delta connected winding, the current transformers shall deliver to the line drop compensator a current that is nominally in phase with a phasor derived from the relationship of the current at the X1 load terminal minus the current at the X2 load terminal.

6.5.2.2 Voltage transformers

It is the responsibility of the user to install appropriate voltage transformer(s) which will match the phasing of the current transformers provided with the transformer.

6.5.3 Control device

6.5.3.1 General

6.5.3.1.1 Environmental

The control must withstand -40°C to 80°C control enclosure temperature, relative humidity from zero to 100%, and altitude of up to 3000 m (9900 feet) without loss of control.

6.5.3.1.2 Response

A step change in applied voltage of 0.75 V from outside the band to within the band shall cancel any raise or lower signal within 0.3 sec.

6.5.3.2 Setpoint adjustment ranges

The control device shall permit parameter adjustment as follows:

a) Voltage level setting adjustable from at least 108 V to 132 V (related to line voltage by voltage supply ratio);

b) Bandwidth setting adjustable from at least 1.5 V to 3.0 V (total range);

c) Actuation time delay setting adjustable from at least 15 to 90 s (The time delay applies only to the first required change if subsequent changes are required to bring the system voltage within the bandwidth setting);

d) Line drop compensation adjustment including independently adjustable resistance and reactance;

   – The resistance will be adjustable in the range of at least 0V to +24V;

Copyright National Electrical Manufacturers Association
Provided by IHS under license with NEMA
No reproduction or networking permitted without license from IHS
Not for Resale

- The reactance will be adjustable in the range of at least -24 V to +24 V;
- The voltage refers to line drop compensation at the nominal control base voltage of 120 volts and rated base current of 0.2 A.

6.5.3.3 Components and accessories

The following components will be provided as part of the control device or as accessories to the control system:

a) Test terminals for measuring voltage proportional to transformer output voltage;

- The test terminal voltage should not be changed more than ±1% by connecting a burden of 25 VA at 0.7 power factor across the test terminals, unless otherwise specified;
- This is not included in the specification of accuracy of the control relays.

b) Manual-automatic control switch;

c) Manual raise/lower switch(es);

d) Operation counter to indicate accumulated number of tap-changer operations;

e) Band limit indication means;

f) A screw-base lamp socket with a switch and a convenience outlet for a 120V, single-phase 60 Hz supply;

g) A heater with a manual switch.

6.5.4 Control system accuracy requirements

The control system of a LTC transformer shall have an overall system error not exceeding ±1%. The accuracy requirement is based on the combined performance of the control device and sensing apparatus including instrument current and voltage transformers, utility windings, transducers, etc. with the voltage and current input signals of a sinusoidal wave shape.

Since it is not practical to test the overall control system accuracy, it is permissible to individually test the control system components and then add their accuracies together to arrive at the overall control system accuracy. Accuracy tests are design tests, not made on every unit. For the test, voltage and current signals should have a sinusoidal wave shape. No analytical correction is permitted to remove effects of harmonics in the accuracy test results.

6.5.4.1 Sensing apparatus

6.5.4.1.1 Voltage source

The VT shall be presumed to be of accuracy class 0.3; refer to IEEE Std C57.13-1993.

6.5.4.1.2 Current source

The current source accuracy shall be determined on a nominal 0.2 amp secondary current and a burden of 3.5 VA; refer to IEEE Std C57.13-1993.

Copyright National Electrical Manufacturers Association
Provided by IHS under license with NEMA
No reproduction or networking permitted without license from IHS
Not for Resale

6.5.4.2 Control device

The accuracy of the control device shall be determined at an ambient temperature of 25°C, rated frequency, nominal input voltage of 120 volts, and base current of 0.2 amps at unity power factor and at zero power factor lagging.

NOTE—The user should be aware that harmonic distortion of the control device input voltage and/or current can result in differences in the sensed average or RMS magnitude which will affect the overall accuracy of the control device and control system. Such differences are inherent in the product design and do not constitute an additional error in the context of control accuracy.

6.5.4.2.1 Errors

Each individual error producing parameter is stated in terms of its effect on the response of the control device and is determined separately with the other parameters held constant. Errors causing the control device to hold a higher voltage level than the reference value are plus errors and those causing a lower voltage level are minus errors. The overall error of the control device is the sum of the individual errors, as separately determined, causing a divergence from the voltage level setting presuming a bandwidth of zero volts.

6.5.4.2.2 Factors for accuracy determination of control device

The greater magnitude of the sum of the positive or negative errors of the following three areas shall constitute the accuracy of the control device:

a) Variations in ambient temperature of the control environment between -30°C and 65°C;

b) Frequency variation of ±0.25% in rated frequency (0.15 Hz for 60 Hz voltage regulator);

c) Line drop compensation;

1) Resistance compensation of 12V and an in-phase base current of 0.2 A with reactance compensation of zero;
2) Resistance compensation of 12V and a 90° lagging base current of 0.2 A with reactance compensation of zero;
3) Reactance compensation of 12V and an in-phase base current of 0.2 A with resistance compensation of zero;
4) Reactance compensation of 12V and a 90° lagging base current of 0.2 A with resistance compensation of zero.

6.5.5 Tests

6.5.5.1 Design tests

6.5.5.1.1 Accuracy

6.5.5.1.1.1 Procedure for determination of accuracy of control device

This subclause outlines procedures for determining values of errors contributed by the factors described in 6.5.4.2.2. The voltage and current sources applied may be as free of harmonics or other distortions as the test facility permits.

Copyright National Electrical Manufacturers Association
Provided by IHS under license with NEMA
No reproduction or networking permitted without license from IHS
Not for Resale

6.5.5.1.1.2 Tests for errors in voltage level

With the control device set at a voltage level of 120 volts and at an ambient temperature of 25°C, energize the control device for one hour using a 120 volt source of rated frequency. The control is calibrated at this point. Errors in voltage level in three tests below will determine the control device accuracy.

a) Tests for error in voltage level due to temperature:

The control device shall be tested over a temperature range of -30°C to 65°C in not more than 20 °C temperature increments. The air temperature surrounding the control device shall be held constant and uniform within ±1°C of each increment for a period of not less than one hour before taking a test reading. Tests are made at rated frequency with zero current in the line drop compensation circuit.

b) Tests for error in voltage level due to frequency:

The control device shall be tested over a sufficient range of frequencies to accurately determine the error over the specified range of rated frequency, ±0.25%. Tests are made at a constant temperature of 25°C with zero current in the line drop compensation circuit.

c) Tests for errors in voltage level due to line drop compensation:

Four tests shall be made at rated frequency and a constant temperature of 25°C and a voltage level setting of 120 V. Determine the voltage level required to balance the control with 0.2 A in the compensator circuit of the control under the following conditions:

Test	Set LDC-R	Set LDC-X	Current Phasing	Determine Voltage Error Relative to Expected
1	12 volts	0 volts	in-phase	V = 132.0 volts
2	0 volts	12 volts	in-phase	V = 120.6 volts
3	12 volts	0 volts	90° lagging	V = 120.6 volts
4	0 volts	12 volts	90° lagging	V = 132.0 volts

Use the individual test error (plus or minus) which produces the largest overall error magnitude when summed per subclause 6.5.4.2.1.

6.5.5.1.2 Set point marks

Deviation of set point marks for voltage level, bandwidth, line drop compensation, and time delay settings are not considered as a portion of the errors in determining the accuracy classification.

6.5.5.1.2.1 Bandwidth center marking deviation

The difference between the actual bandwidth center voltage and the marked value at any setting over the range of 120 V ±10% shall not exceed ±1%.

6.5.5.1.2.2 Bandwidth marking deviation

The difference between the actual bandwidth voltage and the marked value shall not exceed ±10% of the marked value set.

Copyright National Electrical Manufacturers Association
Provided by IHS under license with NEMA
No reproduction or networking permitted without license from IHS
Not for Resale

6.5.5.1.2.3 Compensator marking deviation

The arithmetic difference between the actual compensation voltage expressed as a percent of 120 V, and the marked value of any setting of either the resistance or reactance element of the compensator, expressed as a percent of 120 V, with 0.2 A in the compensator circuit shall not exceed ±1%.

6.5.5.1.2.4 Time delay set marking deviation

The difference between the actual time delay and the marked value of any setting shall not exceed ±20% when initiated with no stored delay in an integrating type circuit.

6.5.5.1.3 Surge withstand capability test

The Surge Withstand Capability (SWC) Test is a design test for the control device in its operating environment. In order to pass this test, the control device shall continue to operate properly and not have any unintentional tap change during and after the test. Refer to IEEE Std C37.90.1-1989.

6.5.5.2 Routine tests

6.5.5.2.1 Applied voltage

The control device shall withstand a dielectric test voltage of 1000 V, 60 Hz from all terminals to case for one minute. The test shall be performed with the control totally disconnected from equipment. After the test, it shall be determined that no change in calibration or performance has occurred.

NOTE—To prevent excessive damage or failure, use of a resistor to limit the current is suggested.

6.5.5.2.2 Operation

All features of the control device and its peripherals will be operated and checked for verification of proper functioning. The control is also calibrated at this point.

7 Alarm contacts

Nongrounded alarm contacts shall be suitable for interrupting:

a) 0.02-ampere direct-current inductive load;
b) 0.20-ampere direct-current noninductive load;
c) 2.5-ampere alternating-current noninductive or inductive load;
d) 250 volts maximum in all classes.

8 Other ratings

8.1 Other kilovolt-ampere ratings

When specified, forced-air-cooled (ONAF) kilovolt-ampere ratings for single- and three-phase transformers shall be as shown in Table 12 for 10 000 kVA and smaller and in Table 13 for 12 000 kVA and larger.

Copyright National Electrical Manufacturers Association
Provided by IHS under license with NEMA
No reproduction or networking permitted without license from IHS
Not for Resale

Table 12 – Single- and three-phase, self-cooled (ONAN) and forced-air-cooled (ONAF) ratings, 750-12 500 kVA

Single-Phase (kVA)		Three-Phase (kVA) Without Load Tap Changing		Three-Phase (kVA) With Load Tap Changing	
ONAN	ONAF	ONAN	ONAF	ONAN	ONAF
833	958	750	862	–	–
1 250	1 437	1 000	1 150	–	–
1 667	1 917	1 500	1 725	–	–
2 500	3 125	2 000	2 300	–	–
3 333	4 167	2 500	3 125	–	–
5 000	6 250	3 750	4 687	3 750	4 687
6 667	8 333	5 000	6 250	5 000	6 250
8 333	10 417	7 500	9 375	7 500	9 375
–	–	10 000	12 500	10 000	12 500

Table 13 – Other (nonpreferred) three-phase, self-cooled (ONAN), forced-cooled first-stage, and forced-cooled second-stage kilovolt-ampere ratings (with, or without, load tap changing)

ONAN	First-Stage	Second-Stage
18 000	24 000	30 000
21 000	28 000	35 000
24 000	32 000	40 000
27 000	36 000	45 000
40 000	53 333	66 667
45 000	60 000	75 000

8.2 Other high-voltage ratings

When specified, high-voltage ratings for single- and three-phase transformers may be selected from the range of other high-voltage ratings listed in Tables 14 and 15. These are rated high voltages (line-to-line) and are alternates to the high-voltage ratings given in Tables 3 through 6. The rated voltage shall be the mid-tap voltage, and all performance characteristics shall be based on the rated voltage.

Four rated kilovolt-ampere equally spaced voltage taps, two above rated voltage, and two below rated voltage, shall be provided for high voltages selected from Tables 14 and 15. The total tap voltage range shall not exceed 10 percent.

The percent tap range shall be calculated as follows:

$$\text{Percent tap range} = \frac{(\text{maximum tap voltage} - \text{minimum tap voltage})100}{\text{rated tap voltage}}$$

8.3 Other winding ratings and connections

When specified, any of the other winding ratings and connections listed in 8.3.1 and 8.3.2 shall be provided.

Copyright National Electrical Manufacturers Association
Provided by IHS under license with NEMA
No reproduction or networking permitted without license from IHS
Not for Resale

8.3.1 Y-connected three-phase high-voltage windings

a) Three-phase transformers with Y-connected high-voltage windings should have the low-voltage windings Δ-connected and be used at a line-to-line voltage corresponding to the insulation levels shown in Tables 14 and 15. Neutral insulation levels may be as covered in ANSI/IEEE C57.12.00-1993.

b) Y-connected high voltage windings may be used on three-phase transformers, provided that the low-voltage winding is permanently Δ-connected, for the ratings described in Tables 14 and 15.

8.3.2 Series-multiple low-voltage ratings

Series-multiple low-voltage ratings for the voltage and kilovolt-ampere ratings are listed in Tables 16 and 17.

Transformers designed with series-multiple low-voltage ratings shall be shipped with the low-voltage windings connected for multiple operation, unless otherwise specified.

8.4 Other basic impulse insulation levels (BILs) and impedance voltages

When specified, other BILs and associated impedance voltages shall be provided, as shown in Table 18.

Table 14 – Range of other high-voltage ratings for single- and three-phase transformers, 95-650 kV BIL (applicable to 750-10 000 kVA, ONAN rating)

Basic Impulse Insulation Level (kV)	High Voltage Ratings From Tables 2 and 3 (V)		Range of Other High Voltage Ratings, Line to Line (V)
	Single - Phase	Three - Phase	
95	**4800/8320Y**	**6 900,7200**	**6 000- 8 750**
110	*6900/11 950Y* **7200/12 470Y 7620/13 200Y 12 000,13 200,13 800**	**12 000, 13 200, 13 800,**	**11 000- 14 750**
150	**23 000**	**23 000**	**16 400- 24 600**
200	**34 500**	**34 500**	**25 700- 36 200**
250	**46 000**	**46 000**	**37 800- 46 000**
350	**69 000**	**69 000**	**56 700- 121 000**
150	**115 000**	**115 000**	**110 000- 145 000**
550	**138 000**	**138 000**	**132 000- 145 000**
650	–	–	**132 000- 145 000**

NOTES

1 All voltages are phase-to-phase, unless otherwise indicated.
2 Voltages separated by a dash indicate that all intervening voltages are included. Voltages separated by a comma indicate that only those listed are included.
3 Bold type—voltages listed in ANSI C84.1-1989.
4 Italics type—voltages not listed in ANSI C84.1-1989.

Copyright National Electrical Manufacturers Association
Provided by IHS under license with NEMA
No reproduction or networking permitted without license from IHS
Not for Resale

Table 15 – Range of other high-voltage ratings for three-phase transformers, 150-900 kV BIL (applicable to 12 000-60 000 kVA, ONAN rating)

Basic Impulse Insulation Level (kV)	High-Voltage Ratings (V)	Range of Other High-Voltage Ratings, Line to Line (V)
150	**23 000**	*16 400– 24 600*
200	**34 500**	*25 700– 36 200*
250	**46 000**	*37 800– 46 000*
350	**69 000**	*56 700–121 000*
450	**115 000**	*110 000–145 000*
550	**138 000**	*132 000–169 000*
650	**161 000**	*153 000–242 000*
750	**230 000**	*153 000–242 000*
825	–	*219 000–242 000*
900	–	*219 000–242 000*

NOTES
1 All voltages are phase-to-phase, unless otherwise indicated.
2 Voltages separated by a dash indicate that all intervening voltages are included.

Table 16 – High-voltage and kilovolt-ampere ratings for series-multiple low-voltage ratings for single-phase transformers

Series-Multiple Low-Voltage Ratings (V)	Basic Impulse Insulation Level (kV)		High-Voltage Ratings (V)			
	Multiple Connection	Series Connection	*6900/11 950Y* **7200/12 470Y** **7620/13 200Y** **12 200,13 200,** **13 800,46 000,** **34 500,46 000,** **69 000**	**23 000** **34 500** **46 000** **69 000**	**34 500** **46 000** **69 000**	**115 000** **138 000**
2400/4160Y x 4800/8320Y, *2520/4360Y x 5040/8720Y*	75	95	833-2500	–	–	–
2400/4160Y x 7200/12 470Y, *2520/4630Y x 7560/13 090Y*	75	110	–	833-2500	–	–
7200/12 470 x 14 400	110	110	–	–	833-3333	2500-8333

NOTES
1 All voltages are phase-to-phase, unless otherwise indicated.
2 Kilovolt-ampere ratings separated by a dash indicate that all the intervening ratings listed in Table 1 are included.
3 Bold type - voltages listed in ANSI C84.1-1989.
4 Italics type - voltages not listed in ANSI C84.1-1989.

Copyright National Electrical Manufacturers Association
Provided by IHS under license with NEMA
No reproduction or networking permitted without license from IHS
Not for Resale

Table 17 – High-voltage and kilovolt-ampere ratings for series-multiple low-voltage ratings for three-phase transformers

Series-Multiple Low-Voltage Ratings (V)	Basic Impulse Insulation Level (kV)		High-Voltage Ratings (V)			
	Multiple Connection	Series Connection	23 000	34 500	46 000 69 000	115 000, 138 000
			Kilovolt-Ampere Ratings (kVA)			
2400 x 4800, *2520 x 5040*	60	75	1000-7500	1000-7500	1500-7500	5000-7500
2400 x 7200 *2520 x 7560*	60	95	–	1000-7500	1500-7500	5000-7500
4160Y/2400 x 8320Y/4800, *4360Y/2520 x 8720Y/5040*	75	95	1000-7500	1000-7500	1500-7500	5000-10 000
4160Y/2400 x 12 470Y/7200, *4360Y/2520 x 13 090Y/7560*	75	110	–	1000-7500	1500-7500	5000-10 000
7200 x 14 400	95	110	–	1000-10 000	1500-10 000	5000-10 000

NOTES
1 All voltages are phase-to-phase, unless otherwise indicated.
2 Kilovolt-ampere ratings separated by a dash indicate that all intervening ratings listed on Table 1 are included.
3 Bold type - voltages listed in ANSI C84.1-1989.
4 Italics type - voltages not listed in ANSI C84.1-1989.

Table 18 – Other BILs and associated percent impedance voltages at self-cooled (ONAN) rating (with, or without, load tap changing)

BIL (kV)	Percent Impedance Voltage	
	Without Load Tap Changing	With Load Tap Changing
650	9.50	10.00
825	10.25	10.75
900	10.50	11.0

9 Other construction features—general

See Table 19.

9.1 Other bushings

Where distribution insulation levels are specified, the electrical characteristics of bushings shall be as listed for distribution apparatus in ANSI/IEEE C57.12.00-1993.

Copyright National Electrical Manufacturers Association
Provided by IHS under license with NEMA
No reproduction or networking permitted without license from IHS
Not for Resale

9.2 Other neutral terminations

When specified, other neutral terminations shall be provided as listed in 9.2.1, 9.2.2, and 9.2.3.

9.2.1 Neutral termination of Y-connected high-voltage windings

When specified, designated neutral terminations of Y-connected high-voltage windings shall be one of the following:

9.2.1.1 The neutral shall be ungrounded and not accessible.

9.2.1.2 The neutral shall be brought through the cover in segment 2.

9.2.1.3 Provisions for a future high-voltage neutral bushing shall be made on the cover in segment 2. A fully insulated neutral shall be brought to a terminal board for isolated neutral operation of the transformer.

9.2.1.4 High-voltage windings of transformers with a Y–Δ terminal board supplied in accordance with 9.3(2) shall be available in one of the following constructions:

a) Neutral ungrounded and not accessible;
b) Neutral brought through the cover in segment 2.

9.2.2 Neutral termination of Y-connected low-voltage windings

When specified, one of the following neutral terminations of Y-connected low-voltage windings shall be provided:

a) Permanently Y-connected low-voltage windings shall have the low-voltage neutral bushing furnished as provided for in 9.1.

b) Low-voltage windings of a three-phase transformer with a low-voltage Y–Δ terminal board supplied in accordance with 9.3(2) shall be provided in one of the following constructions:

   1) Without neutral bushing;
   2) With a neutral bushing of the same voltage class as that of the winding to which it is connected.

9.2.3 Constructions for neutral terminations

Neutral terminations, when furnished in accordance with 9.2.1 and 9.2.2, shall be provided in one of the following constructions:

a) Cover-mounted.
b) When the transformer construction is in accordance with 9.4, 9.5, or 9.6:

   1) Cover-mounted;
   2) Located in the junction box, terminal chamber, or throat, respectively.

9.3 Terminal board

Only one of the following types of terminal boards may be selected for a transformer:

a) A terminal board that provides for a series-multiple connection for transformers listed in the appropriate rating table;

Copyright National Electrical Manufacturers Association
Provided by IHS under license with NEMA
No reproduction or networking permitted without license from IHS
Not for Resale

b) A Y–Δ terminal board that provides angular displacements as shown in Figure 4 for transformers with three-phase windings of 110 kV BIL (15 kV nominal system voltage) or less. (The other winding of the transformer shall be permanently Δ-connected.)

9.4 Junction boxes

Junction boxes may be provided for the cable entrance for windings of 110 kV BIL (15 kV nominal system voltage) or less. (See 9.2.3 when neutral termination is required.)

NOTE—Certain kilovolt-ampere and voltage ratings may impose design limitations on the availability or location of these items.

9.4.1 The high-voltage junction box shall either be mounted:

a) On the side of the tank in segment 2;
b) On the cover in segment 3.

9.4.2 The low-voltage junction box shall either be mounted:

a) On the side of the tank in segment 4;
b) On the cover in segment 1, provided no high-voltage junction box is on the cover.

9.5 Disconnecting switches with interlocks and terminal chambers

Disconnecting switches with interlocks and terminal chambers may be provided for the cable connection for windings of 110 kV BIL (15 kV nominal system voltage) or less. (See 9.2.3 when neutral termination is required.)

NOTE—Certain kilovolt-ampere and voltage ratings may impose design limitations on the availability or location of these items.

9.5.1 The high-voltage terminal chamber shall be mounted on the side of the tank in segment 2.

9.5.2 The low-voltage terminal chamber shall be mounted on the side of the tank in segment 4.

9.6 Throat connection

A throat connection or connections may be provided for windings of 110 kV BIL (15 kV nominal system voltage) or less. (See 9.2.3 when neutral termination is required.)

NOTE—Certain kilovolt-ampere and voltage ratings may impose design limitations on the availability or location of these items.

9.6.1 The high-voltage throat shall either be located:

a) On the side of the tank in segment 2;
b) On the cover in segment 3, provided a low-voltage throat is not on the cover.

9.6.2 The low-voltage throat shall either be located:

a) On the side of the tank in segment 1 or 4;
b) On the cover in segment 1, provided a high-voltage throat is not on the cover.

Copyright National Electrical Manufacturers Association
Provided by IHS under license with NEMA
No reproduction or networking permitted without license from IHS
Not for Resale

Table 19 – "Other" construction features

		kVA, ONAN Ratings			
		Without Load Tap Changing		With Load Tap Changing	
Section	Items	750–10 000	12 000–60 000	3750–10 000	12 000–60 000
9.1	Other Bushings	A	–	–	–
9.2	Other Neutral Terminations	A	A	A	A
9.2.1	Y-Connected HV Windings	A	A	A	A
9.2.2	Y-Connected LV Windings	A	A	A	A
9.2.3	Constructions for Neutral Terminations	A	A	A	A
9.3	Terminal Board	A	A	A	A
9.4	Junction Box ≤15 kV	A	A	A	A
9.4.1	HV	A	A	A	A
9.4.2	LV	A	A	A	A
9.5	Disconnecting Switches ≤15 kV	A	A	A	A
9.5.1	HV Terminal Chamber	A	–	A	–
9.5.2	LV Terminal Chamber	A	A	A	A
9.6	Throat Connection ≤15 kV	A	–	A	–
9.6.1	HV Throat	A	–	A	–
9.6.2	LV Throat	A	A	A	A
9.7	Settings and Wiring of Indicator Contacts	A	A	A	A
9.7.1	Settings	A	A	A	A
9.7.2	Wiring	A	A	A	A
9.7.3	Other Temperature Instruments	A	A	A	A
9.8	Current Transformers	A	A	A	A
9.8.1	Bushing-Type Current Transformers	A	A	A	A
9.8.2	Terminal Blocks	A	A	A	A
9.9	Future Forced-Air Cooling	A	A	A	A
9.9.1	Top-Liquid Temperature Control	A	A	S	S
9.9.2	Winding Temperature Control	A	A	A	A
9.10	Pressure Relay	A	A	A	A
9.11	Moving Facilities (Wheels)	>2500 kVA	A	A	A
9.12	Surge Arresters	A	A	A	A
9.13	Other Oil Preservation	>5000 kVA	A	<5000 kVA	A
9.14	Other Insulating Liquid	A	–	A	–
9.15	Other Tanks–Bolted Cover	A	A	A	A
9.16	Other Loading	A	A	A	A
9.17	"Other" Tests, per ANSI/IEEE C57.12.00-1980	A	A	A	A
10.	Other Construction–Load-Tap-Changing Transformers	–	–	A	A
10.1	Terminal Blocks	A	A	A	A
10.2	Paralleling Circuit and Operation	–	–	A	A

"S" indicates "standard"
"A" indicates "available, when specified"

Copyright National Electrical Manufacturers Association
Provided by IHS under license with NEMA
No reproduction or networking permitted without license from IHS
Not for Resale

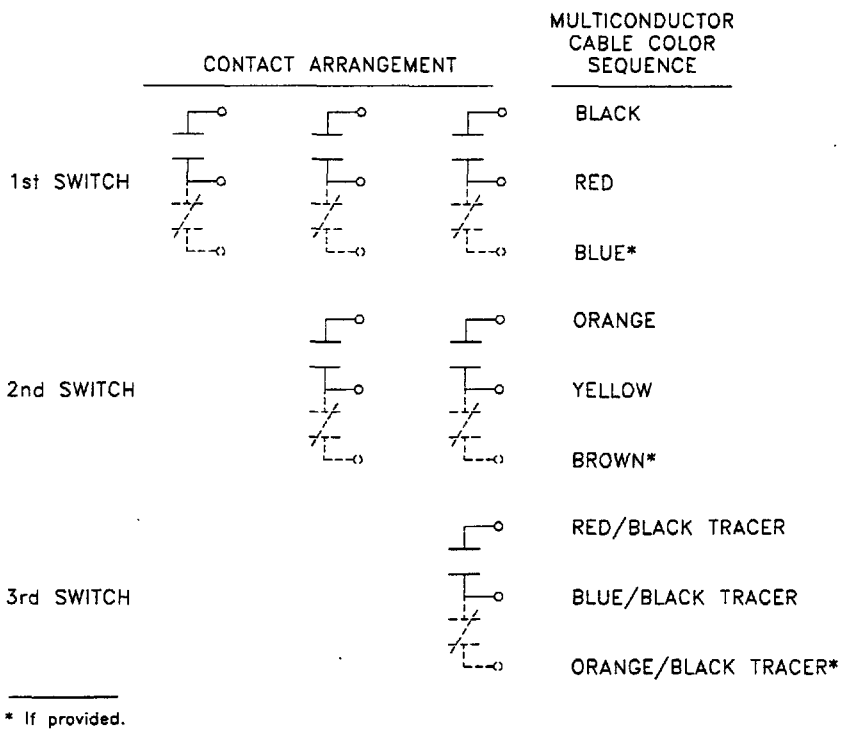

Figure 6 – Contact wiring and wire color coding

9.7 Temperature and liquid-level indicator contacts and wirings

9.7.1 Contacts for liquid-level indicators and temperature indicators shall be in accordance with 7.1.

The liquid-level indicator alarm contacts shall be nonadjustable and shall be set to close at the minimum safe operating level of the liquid.

The liquid-temperature indicator alarm contacts shall be adjustable over a range of 65°C to 110°C.

The winding-temperature simulator contacts shall be adjustable over a range of 95°C to 125°C.

9.7.2 Contact wiring and wire color coding

Contacts shall be wired with cable having the color coding shown in Figure 6 or with cable having permanent labeling.

9.7.3 Other temperature instruments

When specified, eye-level temperature instruments shall be provided.

9.8 Current transformers

9.8.1 Bushing-type current transformers (or provision for their addition in the future)

Bushing-type current transformers shall be multiratio with taps as specified by ANSI/IEEE C57.13-1978, and with relay accuracy class (full winding) as listed in Table 20.

Copyright National Electrical Manufacturers Association
Provided by IHS under license with NEMA
No reproduction or networking permitted without license from IHS
Not for Resale

There shall be a maximum of two current transformers per bushing, not including current transformers for winding-temperature simulators or line drop compensation. Transformers with distribution BIL characteristics shall have a maximum of one current transformer per bushing, not including current transformers for winding-temperature simulators.

All secondary leads shall be brought to an outlet box. Provisions shall be made for short-circuiting.

Provisions shall be made on transformers 2500 kVA and larger for removing bushing-type current transformers from the transformer tank without removing the tank cover.

When provisions for the addition of future current transformers are required, the user shall so specify.

Table 20 – Recommended accuracy classification of bushing current transformers for relaying service

Bushing Insulation Class, kV	Bushing Current Transformer Ratio	Accuracy Class at Full Winding Ratio
46 and Below	600:5	C200
	1200:5, 2000:5, 3000:5 4000:5 and higher	C400 C800
69	600:5	C200
	1200:5	C400
	2000:5 and higher	C800
Above 69	600:5	C400
	1200:5 and higher	C800

9.8.2 Terminal blocks

A nonsplit terminal block shall be provided in a weatherproof enclosure of the nonsplit type, located near the transformer base in segment 1, for terminating contacts specified in 9.7.1 and current transformer secondaries specified in 9.8.1.

9.9 Provision for future forced-air cooling

9.9.1 When class ONAN transformers are to have a provision for future forced-air cooling and the control of the forced-air equipment is to be by the liquid temperature, the following equipment shall be provided:

a) The necessary mechanical arrangement;
b) A thermally operated liquid temperature control device with the thermal element mounted in a well;
c) Provisions for mounting the control cabinet;
d) Provisions for mounting the fans.

9.9.2 When class ONAN transformers are to have a provision for future forced-air cooling and the control of the forced-air equipment is to be by the winding temperature, the following equipment shall be provided:

Copyright National Electrical Manufacturers Association
Provided by IHS under license with NEMA
No reproduction or networking permitted without license from IHS
Not for Resale

a) The necessary mechanical arrangement;
b) A thermally operated winding-temperature control device with the thermal element mounted in a well;
c) A heating coil;
d) A low-voltage current transformer;
e) Provisions for mounting the control cabinet;
f) Provisions for mounting the fans.

NOTE—Information concerning fans and controls is given in 5.9.

9.10 Pressure-type relay

A pressure-type relay shall be provided for the indication of transformer faults.

9.11 Moving facilities

Flanged wheels for a 1.435-meter (56-1/2-inch) rail gage for motion parallel to the centerline of segments 1 and 3 shall be available for 2500 kVA and larger transformers.

9.12 Surge arresters

The following types of construction are available for surge protection:

a) Provision only for the mounting of surge arresters;
b) Mounting complete with surge arresters;
c) A surge arrester ground pad consisting of a tank grounding pad (in accordance with 5.5) that is mounted near the top of the tank and that may be specified for each set of arresters—except that individual ground pads may be supplied where the separation of the arrester stacks is such that individual pads for grounding each phase arrester represent better design.

NOTE—Material for connecting surge arresters to live parts and to ground pads is not included in 9.12(1) through 9.12(3).

9.13 Other oil preservation systems

When specified, other systems of oil preservation shall be provided on transformers rated above 5000 kVA as follows:

a) Inert-gas pressure system—An inert-gas pressure system is a system in which by means of a positive pressure of inert gas maintained from a separate inert-gas source and reducing valve system, the interior of the transformer shall be sealed from the atmosphere through a top-oil temperature range of 100°C. The internal gas pressure shall not exceed 8 psi (55.2 kPa) gage.
b) Conservator or expansion-tank system—A conservator or expansion-tank system is a system that by means of an auxiliary tank partly filled with oil and connected to the completely filled main tank, seals the oil in the main tank from the atmosphere through a top-oil temperature range of 100°C. The internal top-oil pressure in the main tank shall not exceed 5 psi (34.5 kPa) gage.
c) Gas-liquid seal system—A gas-liquid seal system is a system in which the interior of the transformer, by means of an auxiliary tank(s) that provide a liquid seal operating on the manometer principle, shall be sealed from the atmosphere through a top-liquid temperature range of 100°C, and the gas plus liquid volume shall vary such that the internal gas pressure will not exceed 5 psi (34.5 kPa) gage, positive or negative.

Copyright National Electrical Manufacturers Association
Provided by IHS under license with NEMA
No reproduction or networking permitted without license from IHS
Not for Resale

9.14 Other insulating liquid

When specified, another suitable insulating liquid shall be furnished instead of mineral oil.

NOTE—Some "other insulating liquids" may have technical limitations (such as voltage) that may limit their scope of application.

9.15 Other tanks

When specified, a bolted main cover shall be provided.

9.16 Other loading

ANSI/IEEE C57.91-1995 provides guidance and information concerning loading under various conditions, some of which may be limited by the capability of the ancillary components of the transformer. When specified, ancillary components and other construction features (cables, bushings, tap changers, liquid expansion space, and the like) shall be supplied in such a way that they in themselves will not limit the loading to less than the capability of the windings.

In some cases, load on a transformer can change from low load to close to maximum. If the forced cooling control is based on either liquid or winding temperature indicators, the differences in time constants of these devices and windings can create delayed operation of the cooling devices. When specified, other means to start the cooling devices shall be provided.

NOTE—ANSI C57.91-1995 is not a standard. It provides the best known general information for loading transformers under various conditions based on typical winding insulation systems and is based upon the best engineering information available at the time of preparation. It discusses "limitations" of ancillary components other than windings that may limit the capability of transformers to meet its guidelines.

9.17 "Other" tests

When specified, "Other" tests, as described in ANSI/IEEE C57.12.00-1993, shall be performed.

10 Other construction features—load-tap-changing equipment

10.1 Terminal blocks

In a load-tap-changing transformer, terminal blocks shall be provided in the load-tap-changing control cabinet for terminating contacts specified in 9.7.1 and current transformer secondaries (two leads per current transformer) specified in 9.8.1.

10.2 Paralleling circuit and operation

Figure 7 shows a simplified schematic for the circulating current paralleling of two transformers. The following defines part of this schematic:

a) $I_{p,}$ with terminals 5 and 6, are the paralleling current inputs to the two control devices.
b) T_s is a circulating current sensitivity device. Other means are available to accomplish the variable sensitivity that is necessary to prevent tap-changer hunting at one extreme, or to prevent failure of the two tap changers to come together at or near the same tap at the other extreme.
c) When specified, 50_c is a current relay to detect excessive circulating current, block the tap changer, and sound an alarm.
d) Contacts 52a/I, 52b/I, 52a/II, 52b/II are on the circuit breakers tying transformers I and II to the load bus.

Copyright National Electrical Manufacturers Association
Provided by IHS under license with NEMA
No reproduction or networking permitted without license from IHS
Not for Resale

e) Contacts 52BTa and 52BTb are on a breaker used to divide the bus and permit independent operation of one or both transformers.

NOTE—The circuit breaker contacts are shown in the breaker closed position.

f) The first horizontal conductor has a current analogous in angle and magnitude to the reactive current circulating through the two transformers.
g) The second line has a balance current which forces the two load currents to be identical, therefore, any difference must flow through the circulating current path.
h) If one transformer, for example #II, is taken out of service by opening breaker 52/II, then half of the #I load current is forced to flow through the half-current-loop. In this way, transformer control #I sees half the load current that it saw previously and the proper amount of line-drop compensation in the #I control is maintained.
i) The same configuration, grounding points, etc, must be maintained if transformers are to be successfully paralleled.

10.3 Omission of automatic load-tap-changing control

When specified, automatic load-tap-changing control shall be omitted.

10.4 Lightning surge voltage protector for motor power supply

When specified, a lightning surge arrester shall be provided for surge protection of load-tap-changing motor power supply.

Copyright National Electrical Manufacturers Association
Provided by IHS under license with NEMA
No reproduction or networking permitted without license from IHS
Not for Resale

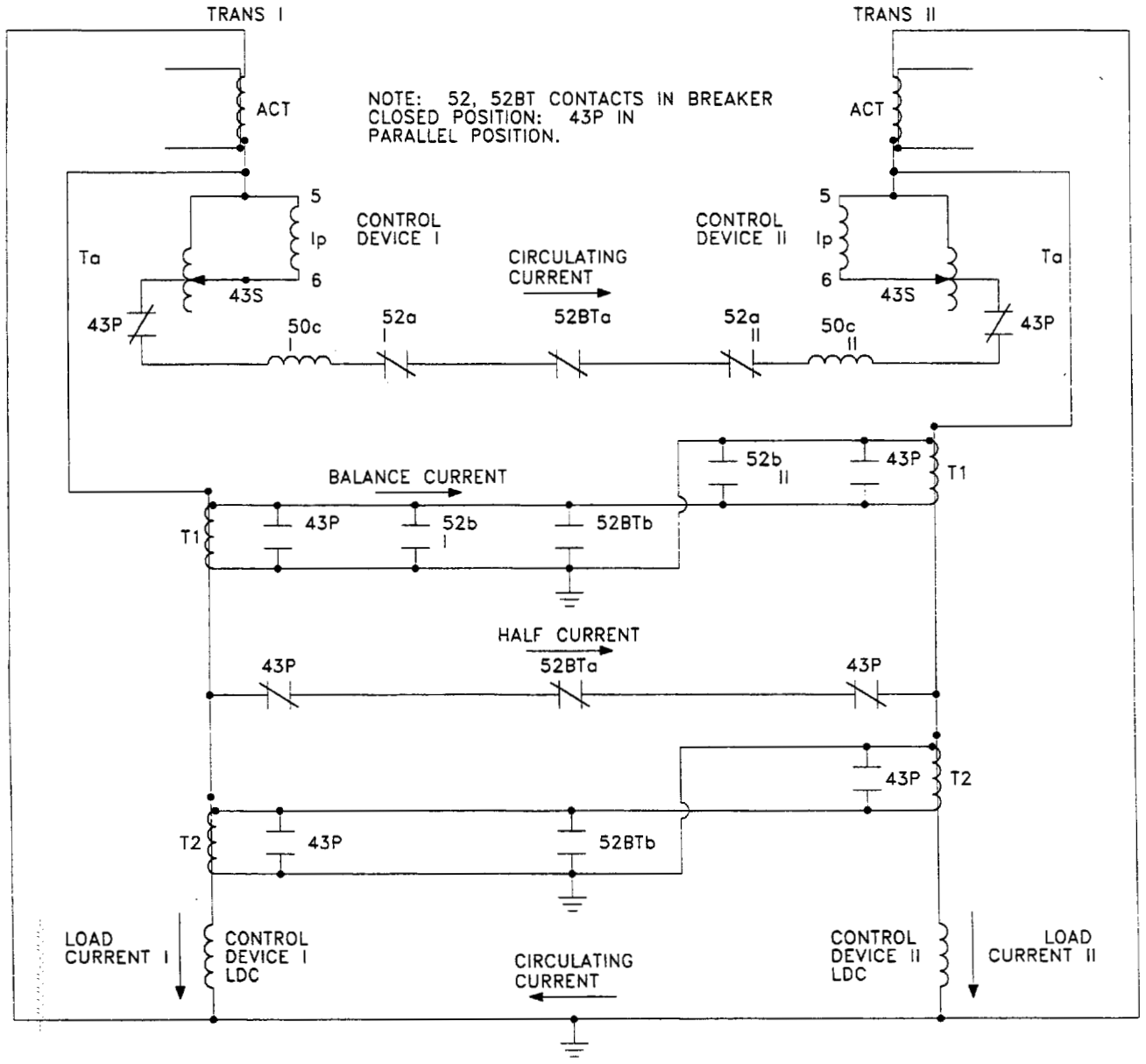

Figure 7 – Simplified schematic of current circuit for paralleling two transformers

Copyright National Electrical Manufacturers Association
Provided by IHS under license with NEMA
No reproduction or networking permitted without license from IHS
Not for Resale