STD.NEMA C37.85-ENGL 1981 6470247 0522389 744

MERICAN NATIONAL STANDARD

American National Standard

ANSI C37.85-1989 (R1995)

American National Standard

Interrupters, Used in Power Switchgear, X Radiation Limits for AC High Voltage Power Vacuum

NATIONAL ELECTRICAL MANUFACTURERS ASSOCIATION
1300 NORTH 17TH STREET, SUITE 1847, ROSSLYN, VA 22209
(703) 841-3200 FAX: (703) 841-3300

Copyright National Electrical Manufacturers Association
Provided by IHS under license with NEMA
No reproduction or networking permitted without license from IHS
Not for Resale

STD.NEMA C37.85-ENGL 1981 ■ 6470247 0522390 466 ■

ANSI®
C37.85-1989
Revision of
ANSI C37.85-1972

American National Standard
for Switchgear –

Alternating-Current High-Voltage Power Vacuum Interrupters – Safety Requirements for X-Radiation Limits

Secretariat

National Electrical Manufacturers Association
Institute of Electrical and Electronics Engineers

Approved October 17, 1988

American National Standards Institute, Inc

Copyright National Electrical Manufacturers Association
Provided by IHS under license with NEMA
No reproduction or networking permitted without license from IHS

Not for Resale

ANSI C37.85-1989 (R1995)

American National Standard

Approval of an American National Standard requires verification by ANSI that the requirements for due process, consensus, and other criteria for approval have been met by the standards developer.

Consensus is established when, in the judgment of the ANSI Board of Standards Review, substantial agreement has been reached by directly and materially affected interests. Substantial agreement means much more than a simple majority, but not necessarily unanimity. Consensus requires that all views and objections be considered, and that a concerted effort be made toward their resolution.

The use of American National Standards is completely voluntary; their existence does not in any respect preclude anyone, whether he has approved the standards or not, from manufacturing, marketing, purchasing, or using products, processes, or procedures not conforming to the standards.

The American National Standards Institute does not develop standards and will in no circumstances give an interpretation of any American National Standard. Moreover, no person shall have the right or authority to issue an interpretation of an American National Standard in the name of the American National Standards Institute. Requests for interpretations shall be addressed to the secretariat or sponsor whose name appears on the title page of this standard.

CAUTION NOTICE: This American National Standard may be revised or withdrawn at any time. The procedures of the American National Standards Institute require that action be taken to reaffirm, revise, or withdraw this standard no later than five years from the date of approval. Purchasers of American National Standards may receive current information on all standards by calling or writing the American National Standards Institute.

Published by

National Electrical Manufacturers Association
1300 N. 17th Street, Rosslyn, Virginia 22209

Copyright © 2000 National Electrical Manufacturers Association
All rights reserved.

No part of this publication may be reproduced in any form, in an electronic retrieval system or otherwise, without prior written permission of the publisher.

Printed in the United States of America

Copyright National Electrical Manufacturers Association
Provided by IHS under license with NEMA
No reproduction or networking permitted without license from IHS

Not for Resale

Foreword

(This Foreword is not part of American National Standard C37.85-1989.)

This standard was developed initially by a task force of the NEMA Switchgear Section as a result of an industry study undertaken at the request of the Bureau of Radiological Health in order to meet the need as set forth in Public Law 90-602, identified as Radiation Control for Health and Safety Act of 1968.

Upon completion, the initial proposal was submitted to the American National Standards Committee C37 on Power Switchgear for further development and in order to obtain a consensus as an American National Standard. It was approved on April 28, 1972 as American National Standard for Safety Requirements for X-Radiation Limits for AC High-Voltage Power Vacuum Interrupters Used in Power Switchgear, ANSI C37.85-1972.

This standard set forth performance requirements relative to X-radiation emission and methods of test for high-voltage vacuum switching devices. The 1988 revision incorporates higher-voltage vacuum interrupters that have been developed, tested, and placed into service since the 1978 reaffirmation and that meet the requirements of this standard.

Suggestions for improvement of this standard will be welcome. They should be sent to the National Electrical Manufacturers Association, Inc, 2101 L Street, NW, Washington, DC 20037.

This standard was processed and approved for submittal to ANSI by Accredited Standards Committee on Power Switchgear, C37. Committee approval of the standard does not necessarily imply that all members voted for its approval. At the time it approved this standard, the C37 Committee had the following members:

W. E. Laubach, Chair
A. K. McCabe, Executive Vice-Chair, High-Voltage Standards
S. H. Telander, Executive Vice-Chair, Low-Voltage Standards
D. L. Swindler, Executive Vice-Chair, International Electrotechnical Commission Activities
C. H. White, Secretary
M. B. Williams, Program Administrator

Organization Represented	*Name of Representative*
Association of Iron and Steel Engineers	J. M. Tillman
Electric Light and Power Group	R. L. Capra (Chair)
	D. A. Ditzler
	K. D. Hendrix
	J. H. Provanzana
	D. T. Weston
	T. E. Bruck (Alt)
	D. E. Soffrin (Alt)
Institute of Electrical and Electronics Engineers, Inc.	H. W. Mikulecky (Chair)
	W. F. Hoenigmann
	D. M. Larson
	E. W. Schmunk
	C. A. Schwalbe
	S. C. Atkinson (Alt)
	D. G. Kumbera (Alt)
National Electrical Manufacturers Association	R. A. McMaster (Chair)
	T. C. Burtnett
	R. H. Miller
	R. O. D. Whitt
	H. L. Miller (Alt)
Tennessee Valley Authority	R. B. Rotton
Testing Laboratory Group	L. Frier
	W. T. O'Grady
	R. W. Seelbach (Alt)

Copyright National Electrical Manufacturers Association
Provided by IHS under license with NEMA
No reproduction or networking permitted without license from IHS
Not for Resale

Organization Represented	*Name of Representative*
U.S. Department of Agriculture – Rural Electrification Administration	H. L. Bowles
U.S. Department of the Army – Office of the Chief of Engineers	W. M. Jones
U.S. Department of the Interior – Bureau of Reclamation	J. W. Reif
U.S. Department of the Navy – Naval Construction Battalion Center	R. L. Clark
Western Area Power Administration	G. D. Birney

The C37 Subcommittee on X-Radiation Limits for AC High-Voltage Power Vacuum Interrupters for Use in Power Switchgear, which developed this standard, had the following members:

P. O. Wayland, Chair
B. H. Schultz, Working Group Chair
C. H. White, Secretary
M. B. Williams, Program Administrator

K. Goodman
H. K. Reid
W. N. Rothenbuhler
R. L. Walchle

Contents

SECTION PAGE

1. Scope 4
2. Related American National Standards 4
3. Definitions 4
4. Performance Requirements 4
5. Conformance Test Procedures for New Interrupters 5
   5.1 General Requirements 5
   5.2 Test Voltage and Measurement Procedure 5
6. Dielectric Withstand Voltage Tests on Used Interrupters 5
7. Labeling 7

Table 1 X-Radiation Test Voltages for Interrupters Applied Without Additional External Shielding 5

Figure 1 Test Location of Radiation Meter 6

Appendixes

Appendix A Report on the Basis of Derivation of the Maximum Permissible Levels of X-Radiation Emitted by High-Voltage Power Vacuum Interrupters 7

Appendix B Testing in Assembled Switchgear 8
   B1 General 8
   B2 Determination of the Low-Frequency Test Voltage 8

Copyright National Electrical Manufacturers Association
Provided by IHS under license with NEMA
No reproduction or networking permitted without license from IHS
Not for Resale

American National Standard for Switchgear –

Alternating-Current High-Voltage Power Vacuum Interrupters – Safety Requirements for X-Radiation Limits

1. Scope

This standard specifies the maximum permissible X-radiation emission from alternating-current high-voltage power vacuum interrupters that are intended to be operated at voltages between 5000 volts and 38 000 volts when tested in accordance with procedures described in this standard.

NOTES:

(1) The test procedures prescribed in this standard are not necessarily applicable for higher-voltage vacuum interrupters.

(2) In this standard, the term "interrupter" signifies "high-voltage power vacuum interrupter," unless qualified by other descriptive terms.

2. Related American National Standards

The following standards are listed for information only and are not essential to complete the requirements of this standard.

ANSI/NBS 114-1974, General Safety Standard for Installations Using Non-Medical X-Ray and Sealed Gamma-Ray Sources, Energies up to 10 MeV

ANSI/IEEE C37.100-1981 and C37.100b-1985, Definitions for Power Switchgear

3. Definitions

The definitions and terms contained in this standard, or in other American National Standards referred to in this standard, are not intended to embrace all legitimate meanings of the terms. They are applicable only to the subject treated in this standard. For additional definitions of terms used in this standard, see ANSI/IEEE C37.100-1981 and C37.100b-1985. An asterisk (*) following a definition indicates that, at the time this standard was approved, there was no corresponding definition in ANSI/IEEE C37.100-1981 and C37.100b-1985.

conformance tests. Those tests that are specifically made to demonstrate the conformity of switchgear or its component parts with applicable standards.

dielectric withstand voltage tests. Tests made to determine the ability of insulating materials and spacings to withstand specified over-voltages for a specified time without dielectric breakdown or puncture.

high-voltage power vacuum interrupter. An interrupter in which the separable contacts function within a single evacuated envelope and that is intended for use in power switchgear.*

maximum interrupter operating voltage. The highest steady-state alternating-current rms operating voltage that will appear across the open contacts of a vacuum interrupter in its application.*

NOTE: The maximum interrupter operating voltage is a function of the highest system voltage on which a switchgear device employing vacuum interrupters is to be applied, the number of interrupters used in series, and whether the device is single-phase or three-phase.

milliroentgen (mR). The amount of X-radiation that produces 2.58×10^{-7} coulomb per kilogram of air.*

shielding. The barrier of attenuating material used to reduce radiation hazards.*

4. Performance Requirements

Interrupters, tested as specified in Section 5, shall be in compliance with this standard if the X-radiation emitted does not exceed the following:

(1) 0.5 milliroentgen per hour at the maximum operating voltage shown in column 2 of Table 1.

(2) 15.0 milliroentgens per hour at the low-frequency dielectric withstand test voltage shown in column 3 of Table 1.

Copyright National Electrical Manufacturers Association
Provided by IHS under license with NEMA
No reproduction or networking permitted without license from IHS
Not for Resale

Table 1
X-Radiation Test Voltages for Interrupters Applied Without Additional External Shielding

Rated Maximum Voltage (kV rms)* (Column 1)	X-Radiation Test Voltages† Maximum Interrupter Operating Voltage (kV rms) (Column 2)	Low-Frequency Test Voltage (kV rms) (Column 3)
15.5	15.5	37.5
25.8–27.0	27.0	45.0
38.0	38.0	52.5‡
38.0	38.0	60.0§

*Table 1 will be expanded in future revisions of this standard as additional ratings become available.

†Refer to Appendix B for the derivation of the test voltages.

‡For interrupters used in switchgear having a normal low-frequency withstand test voltage of 70 kv rms.

§For interrupters used in switchgear having a normal low-frequency withstand test voltage of 80 kv rms.

5. Conformance Test Procedures for New Interrupters

5.1 General Requirements

5.1.1 Condition of Interrupter to Be Tested. When conformance tests are to be performed, the interrupter shall be new and in good condition and tests shall be performed before it is put into commercial service.

5.1.2 Mounting of Specimen. The interrupter shall be mounted in a test fixture, designed so that the open contact spacing may be set at the supplier's recommended minimum distance, and which will permit the application of a test voltage to one terminal of the interrupter while the other terminal is grounded. Interrupters designed for operation in an insulating medium other than air (such as oil or SF_6) may be tested in such a medium, if necessary, to withstand the test voltage.

The container for the insulating medium shall be of an insulating material having radiation attenuation no greater than that afforded by 3/8-inch-thick methyl methacrylate. The insulating medium between the interrupter and radiation instrument shall be the minimum required for dielectric purposes.

5.1.3 Test Circuit. The interrupter shall be connected to a power source of alternating-current voltage with a means for varying the voltage across the open contacts of the interrupter. A sine wave having a crest value not exceeding 1.414 times the rms value shall be applied.

5.1.4 Frequency. The frequency of the supply voltage shall be 60 hertz ± 5 percent.

5.1.5 Radiation Instrument. A radio frequency (RF) shielded radiation survey instrument[1] having the following minimum specifications shall be used:

Accuracy: Capable of measuring 15 milliroentgens per hour with an accuracy of ± 25 percent with a response time not to exceed 15 seconds
Energy Response: 12 kiloelectron volts to 0.5 megaelectronvolts ± 15 percent
Sensitive Area: 100 cm^2, maximum.

5.1.6 Location of Radiation Instrument. The sensing element of the radiation instrument shall be positioned in the plane of the separable contacts and pointed at the contacts from a distance of 1 meter from the nearest external surface of the interrupter (see Figure 1). When electrical safety requires the instrument to be located at a distance greater than 1 meter, the instrument reading shall be adjusted by applying the inverse square law.

5.1.7 Precautions. If distances normally required for electrical safety are maintained, the exposure to test personnel will generally not exceed established dose limits (see ANSI/NBS 114-1974). Nevertheless, adequate precautions such as shielding or distance should be used to protect test personnel against possible higher X-radiation occurrences due, for example, to incorrect contact spacing, or to the application of voltages in excess of those specified in 5.2.

5.2 Test Voltage and Measurement Procedure. With the interrupter mounted in a test fixture, with the contacts blocked open at the minimum contact spacing specified by the supplier, and with the radiation instrument in place (see Figure 1), a voltage shall be applied across the interrupter contacts equal to the maximum interrupter operating voltage shown in Column 2 of Table 1. After a minimum of 15 seconds, the X-radiation level on the radiation instrument shall be read.

Next, the voltage across the interrupter contacts shall be raised to a value equal to the low-frequency insulation withstand test voltage shown in Column 3 of Table 1. After a minimum of 15 seconds, the X-radiation level on the radiation meter shall be read.

6. Dielectric Withstand Voltage Tests on Used Interrupters

Dielectric withstand voltage tests should be performed by users of switchgear devices, as part of a preventive

[1] Victoreen Instrument Company Model 440RF was used during the development of this standard.

Copyright National Electrical Manufacturers Association
Provided by IHS under license with NEMA
No reproduction or networking permitted without license from IHS
Not for Resale

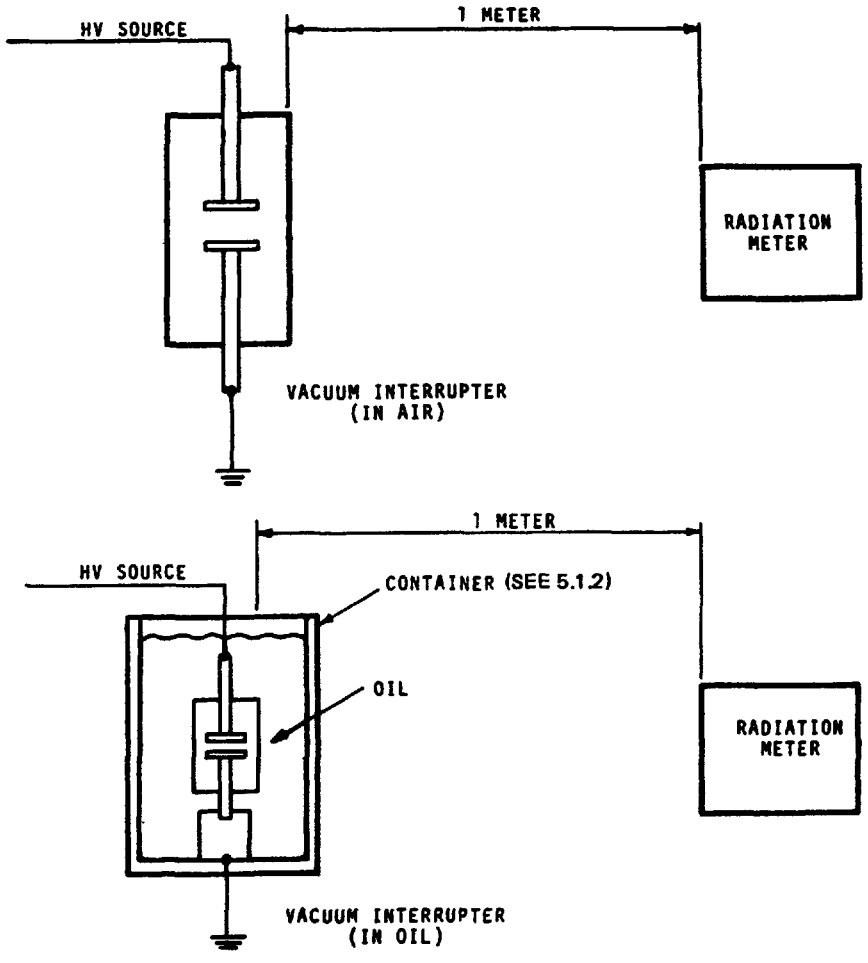

Figure 1
Test Location of Radiation Meter

maintenance program, to prove the ability of insulating materials and spacings to withstand specified over-voltages for specified times without dielectric breakdown or puncture. The test voltage levels used for field tests are typically 75 percent of the levels used on new equipment by the suppliers.

Dielectric withstand voltage tests may also be used to establish the vacuum integrity of vacuum interrupters. Suppliers shall prescribe the test procedures, including gap settings and test voltages, for conducting dielectric withstand voltage tests on used vacuum interrupters or switchgear utilizing vacuum interrupters.

When dielectric withstand voltage tests are performed on used vacuum interrupters, or on switchgear utilizing vacuum interrupters, precautions shall be taken for the safety of test personnel. If distances normally required for electrical safety are maintained, X-radiation exposure to test personnel generally does not exceed established dose limits (see ANSI/NBS 114-1974). Nevertheless, adequate precautions such as shielding or distance should be used to protect personnel against possible higher X-radiation occurrences due, for example, to incorrect contact spacing, or to the inadvertent application of voltages in excess of the values prescribed in Column 3 of Table 1.

7. Labeling

Each interrupter prepared for shipment shall have at least the following wording on its outer surface:

CAUTION
Read Instructions Before Energizing
This Device May Produce Harmful X-Rays

Copyright National Electrical Manufacturers Association
Provided by IHS under license with NEMA
No reproduction or networking permitted without license from IHS
Not for Resale

Appendixes

(These Appendixes are not part of American National Standard C37.85-1989, but are included for information only.)

Appendix A

Report on the Basis of Derivation of the Maximum Permissible Levels of X-Radiation Emitted by High-Voltage Power Vacuum Interrupters

The known United States manufacturers of vacuum interrupters initiated a test program during July of 1968 (as a Task Force of the NEMA Switchgear Section) to determine the present levels of X-radiation, if any, being emitted from high-voltage power vacuum interrupters, and to suggest permissible levels of radiation from such interrupters on the basis of their recognized application.

Each manufacturer conducted a series of tests on new vacuum interrupters taken from stock and recorded the X-radiation levels, if any, under the following conditions:

(1) Dielectric withstand test voltage applied to new interrupters

(2) Fault current interruption (where applicable)

(3) Load current interruption

(4) Dielectric withstand test voltages after fault current interruption

(5) Dielectric withstand test voltages after load current interruption

As a result of evaluating the results of the aforementioned tests, the manufacturers concluded that neither the general public nor users will be subjected to harmful X-radiation due to normal application and operation of 15.5-kilovolt-rated vacuum interrupter devices when applied within their assigned ratings and when the voltage applied across the open contacts of the interrupter is 15.5 kilovolts or less.

The manufacturers also concluded that at the permissible user dielectric withstand test voltage of 37.5 kilovolts, radiation levels are negligible for vacuum interrupters rated 15.5 kilovolts. Normal electrical safety precautions require the user to be at a distance from the interrupters that provides sufficient protection.

Since the factors of time and distance are involved, the manufacturers proposed that 15 milliroentgens per hour for 1 minute or 0.25 milliroentgen per test be considered as a reasonable and safe maximum level of radiation in uncontrolled areas for user personnel engaged in testing vacuum interrupters of the type and rating covered by the foregoing test program.

The 15 milliroentgen-per-hour radiation level is measured at a distance of 1 meter from the vacuum interrupter. When a dielectric withstand test voltage of 37.5 kilovolts is applied, it would be highly unlikely that any individual would be within 1 meter of the interrupter being tested since the individual could reach out and touch the energized bare conductor. A minimum distance of 2 meters to 3 meters can normally be expected to be used for reasons of electrical safety.

Assuming a maximum permissible cumulative exposure for an uncontrolled area not to exceed 500 milliroentgens per year, or 100 milliroentgens in 7 consecutive days, or 2 milliroentgens in any one hour and a maximum radiation rate of 15 milliroentgens per hour for a 1-minute test (0.25 milliroentgen per test) from each interrupter at a distance of 1 meter, 33.3 hours of exposure would be permitted in a single year. Two thousand 1-minute dielectric withstand tests would have to be performed in a year to accumulate a maximum permissible dosage. Since this test is performed only during maintenance, which normally occurs only once in a 1-year to 3-year period, 2000 1-minute tests per year exceeds by a factor of 10 or more the number of interrupters a user such as a utility would be expected to test in a year.

Concerning the 50-kilovolt 1-minute withstand test voltage applied by the switchgear manufacturer during his factory test, the manufacturers believe that the level of possible emitted X-radiation could be injurious to personnel. Therefore, the manufacturers recommended that they take the appropriate precautions to protect personnel and meet local codes by using monitoring devices and safety measures as required.

Since the 1978 reaffirmation of this standard, manufacturers have conducted tests on interrupters rated through 38 kilovolts, as reflected in this revision. This testing and concurrent field experience has demonstrated that these higher voltage ratings meet the requirements of this standard.

Copyright National Electrical Manufacturers Association
Provided by IHS under license with NEMA
No reproduction or networking permitted without license from IHS
Not for Resale

Appendix B

Testing in Assembled Switchgear

B1. General

This standard is intended for use by vacuum interrupter manufacturers to ensure that interrupters produced do not emit X-radiation in excess of prescribed limits under specified conditions. The test procedures call for the interrupters to be tested in fixtures. The procedures, therefore, are not readily applicable to interrupters installed in assembled switchgear.

Assembled switchgear, however, is subject to periodic dielectric withstand voltage tests by users, usually as part of a preventive maintenance program. The purpose of the dielectric withstand voltage test is to prove the quality of the insulation system. The test is not intended for X-radiation measurements. However, since interrupters may be subjected to dielectric withstand voltage tests, they should be designed so as not to emit radiation in excess of the levels specified in this standard at the test voltage level.

Dielectric withstand voltage tests may also be used, under prescribed conditions, to verify that vacuum interrupters have maintained their vacuum integrity.

The two voltage levels to which a vacuum interrupter is subjected in its application are:

(1) The maximum interrupter operating voltage (see Section 3)

(2) The field dielectric withstand test voltage

B2. Determination of the Low-Frequency Test Voltage

The low-frequency withstand test voltage shown in Column 3 of Table 1 is 75 percent of the factory dielectric withstand test voltage for each of the rated maximum voltages shown in Column 1. This test voltage is typically used by users performing dielectric tests on switchgear devices.

Manufacturers test assembled switchgear at the factory test level. This procedure may cause the interrupter to emit X-radiation in excess of the amount prescribed in (2) of Section 4. Manufacturers should have the necessary facilities and take the necessary precautions to protect workers against accidental radiation exposures.

Users conduct such tests less frequently and test at the lower test voltage. This procedure makes the use of special facilities unnecessary. Nevertheless, the precautions specified in 5.1.7 should be observed.

Copyright National Electrical Manufacturers Association
Provided by IHS under license with NEMA
No reproduction or networking permitted without license from IHS
Not for Resale