C37.72-87 6470247 0007220 6 A-31-15

American National Standard

for manually-operated, dead-front padmounted switchgear with load interrupting switches and separable connectors for alternating-current systems



american national standards institute, inc.
1430 broadway, new york, new york 10018

Copyright National Electrical Manufacturers Association
Provided by IHS under license with NEMA
No reproduction or networking permitted without license from IHS
Not for Resale

C37.72-87 6470247 0007221 8

ANSI®
C37.72-1987

American National Standard for Manually-Operated, Dead-Front Padmounted Switchgear with Load Interrupting Switches and Separable Connectors for Alternating-Current Systems

Published by

National Electrical Manufacturers Association
2101 L Street, NW
Washington, DC 20037
(202) 457-8400

© 1987 by National Electrical Manufacturers Association

Copyright National Electrical Manufacturers Association
Provided by IHS under license with NEMA
No reproduction or networking permitted without license from IHS
Not for Resale

Contents

SECTION PAGE

1. Scope 5

2. Definitions 5

3. Service Conditions 5
   3.1 Usual Service Conditions 5
   3.2 Unusual Service Conditions 5

4. Ratings and Test Requirements 6
   4.1 Rating Information 6
   4.2 Voltage Ratings and Related Test Requirements 6
   4.3 Current Test Values 7

5. Design Tests 9
   5.1 General 9
   5.2 Interrupting Tests 9
   5.3 Short-Time Current Tests 10
   5.4 Dielectric Tests 11
   5.5 Continuous Current Test 12
   5.6 Mechanical Operation Test 12
   5.7 Partial Discharge (Corona) Test 13
   5.8 DC Withstand Test 13
   5.9 Pressure Test 13

6. Production Tests 13
   6.1 Circuit Resistance Test 13
   6.2 60 Hz Withstand Test 13
   6.3 Leak Test 13
   6.4 Operating Assurance Tests 13
   6.5 Partial Discharge (Corona) Tests 13

7. Conformance Tests 13
   7.1 Temperature Measurements 13
   7.2 Impulse Withstand Tests 13
   7.3 Loop Current Requirement 14

8. Construction Requirements 14
   8.1 Grounding Provision 14
   8.2 Manual Operating Provision 14
   8.3 Position Indicators 14
   8.4 Insulating Medium Quantity Indicators 14
   8.5 Drain and Replacement Provisions 14
   8.6 Sampling and Addition Provisions 14
   8.7 Enclosure Construction 14
   8.8 Nameplate 15

9. Shipping Requirements 15

Copyright National Electrical Manufacturers Association
Provided by IHS under license with NEMA
No reproduction or networking permitted without license from IHS
Not for Resale

TABLE PAGE

Table 1 Altitude Correction 6
Table 2 Voltage Ratings and Related Test Requirements 6
Table 3 Continuous, Load Interrupting and Short-Time Current Test Values 7
Table 4 Cable Charging Interrupting and Magnetizing Interrupting Current Ratings 7
Table 5 Load Switching 9

FIGURE PAGE

Figure I Example Using Definitions From Section 2 16
Figure II Load Switching Test Circuits 17
Figure III Magnetizing Current Test Circuit 18
Figure IV Cable Charging Current Test Circuit 19
Figure V Loop Current Interruption Test Circuit 20
Figure VI Short-Time Current Test Circuits 21
Figure VII Padmounted Equipment Security Details of Recessed Captive Penta-Head Bolt to be Provided on All Access Doors 22
Figure VIII Outline for User Identification Plate 23

Copyright National Electrical Manufacturers Association
Provided by IHS under license with NEMA
No reproduction or networking permitted without license from IHS
Not for Resale

Foreword

(This Foreword is not part of American National Standard Requirements for Manually-Operated, Dead-Front Padmounted Switchgear with Load Interrupting Switches and Separable Connectors for Alternating-Current Systems, C37.72.)

This is a new (1987) American National Standard (C37.72). It has been developed to meet manufacturer and users current requirements for manually-operated, dead-front padmounted switchgear.

Suggestions for improvement gained in the use of this standard will be welcome. They should be sent to ASC C37 c/o NEMA, 2101 L Street, N.W., Washington, DC 20037.

The Accredited Standards Committee on Power Switchgear (ASC C37), which reviewed and approved this standard, had the following personnel at the time of approval:

W. E. Laubach, Chairman
D. L. Swindler, Vice Chairman
S. H. Telander, Vice Chairman
W. N. Rothenbuhler, Vice Chairman
C. H. White, Secretary

Organization Represented	*Name of Representative*
Association of Iron & Steel Engineers	J. M. Tillman
Electric Light & Power Group	R. L. Capra
	D. O. Craghead
	D. A. Ditzler (Alt.)
	K. D. Hendrix
	D. E. Soffrin (Alt.)
	D. T. Weston
	J. H. Provauzana (Alt.)
Institute of Electrical & Electronics Engineers	S. C. Atkinson (Alt.)
	R. W. Haas
	G. R. Hanks
	W. F. Hoenignann (Alt.)
	D. G. Kumbera (Alt.)
	H. W. Mikulecky
	E. W. Schmunk
	C. A Schwalbe
National Electrical Manufacturers Association	R. O. D. Whitt
	G. A. Wilson
	R. A. McMaster
Testing Laboratory Group	L. Frier
	W. T. O'Grady
	R. W. Seelbach (Alt.)
Tennessee Valley Authority	R. C. St. Clair
U.S. Dept. of the Army Corps of Engineers	H. K. Snyder
U.S. Dept. of the Interior, Bureau of Reclamation	J. W. Reif
U.S. Dept. of the Navy Naval Construction Battalion Center	R. L. Clark
Western Area Power Authority	G. D. Birney

Copyright National Electrical Manufacturers Association
Provided by IHS under license with NEMA
No reproduction or networking permitted without license from IHS
Not for Resale

The Joint IEEE Switchgear/T & D Working Group for Padmounted Switches had the following membership at the time of development of this standard:

Charles A. Popeck, Co-Chairman
R. L. Capra, Co-Chairman
Gary Dolloff
Ken Banas
Argus Parks
James Ransom
George H. Taylor
Leno V. Chabala
A. J. Kalvaitis
Larry V. McCall
Gordon Perkins
L. R. Beard
L. Clemons
D. G. Kumbera
Dino A. Granata
Bill Reuth
C. L. Welter
Harvey Bowles
J. J. Burke

The ANSI C37 Working Group on Overhead, Padmounted and Submersible Distribution Switches had the following membership at the time of development of this standard:

Charles A. Popeck, Chairman
James R. Miller
E. L. Bates
James Ransom
Kenneth E. Lloyd
Gordon Perkins
Frank Trayer
Paul Bergstrom
R. L. Capra
Ken Elliott
Miquel Yamat
R. W. Nelson
G. W. Schneider
Clarence Welter
James Marek
John Cooper
David G. Kumbera
A. F. Parks
Bill Rueth

Copyright National Electrical Manufacturers Association
Provided by IHS under license with NEMA
No reproduction or networking permitted without license from IHS
Not for Resale

American National Standard for Manually-Operated, Dead-Front Padmounted Switchgear with Load Interrupting Switches and Separable Connectors for Alternating-Current Systems

1. Scope

This standard applies to assemblies of three-phase, group operated, and single-phase, load interrupting switches with separable connectors, in an enclosure with maximum ratings of 600 amperes and 38 kv, 60 Hz.

2. Definitions

The definitions of terms contained in this Standard, or in other standards referred to in this document, are not intended to embrace all the legitimate meanings of the terms. They are applicable only to the subject treated in this Standard. For additional definitions, see American National Standard Definitions for Power Switchgear (C37.100-1981).

2.1 Bus (as used in this Standard). A junction common to two or more ways.

2.2 Dead-Front Padmounted Switchgear (PMSG). An assembly in which all energized parts are insulated and completely enclosed within a grounded shield system when separable connectors are in place. The overall enclosure is of suitable environmental and tamper resistant construction for outdoor above ground installation. Front refers specifically to any side of the enclosure that provides access to enclosed accessories external to the ground shield system. In this standard, dead-front padmounted switchgear shall be called PMSG.

2.3 Way. A three-phase circuit entrance to a switch or bus or for single-phase switches, single-phase entrance to a switch or bus.

2.4 Switched Way. A way connected to the bus through a switch.

2.5 Tapped Way. A way solidly connected to bus.

NOTE: For clarification of definitions see Figure 1.

3. Service Conditions

3.1 Usual Service Conditions. PMSG conforming to this Standard shall be suitable for operation at their nameplate rating when:

(1) The ambient air temperature is not above 40°C or below −30°C

(2) The altitude does not exceed 3,300 feet (1,000 meters)

3.2 Unusual Service Conditions

3.2.1 Abnormal Ambient Temperatures. PMSG may be applied at higher or lower ambient temperatures than specified, but performance may be affected and special consideration shall be given to these applications.

3.2.2 Altitudes Above 3,300 Feet (1,000 Meters). PMSG may be applied at altitudes higher than 3,300 feet (1,000 meters). However, the basic impulse insulation level and rated maximum voltage of air insulated PMSG shall be multiplied individually by the correction factor shown in Column 3 of Table 1, to obtain values at which the application may be made. In addition, the continuous current rating shall be multiplied by the correction factor shown in Column 4 of Table 1.

However, PMSG designed for standard temperature rise may be used at normal current rating without exceeding total temperature limits provided that the upper ambient temperature does not exceed the ambient allowed in 3.1 multiplied by the factor shown in Column 5 of Table 1. (Other ratings are not affected by altitude.)

3.2.3 Other Service Conditions Which May Affect Design and Application. Where other unusual conditions exist they should be brought to the attention of the manufacturer. An unusual condition is considered to be any installation, application or operation outside the requirements defined in this standard.

Copyright National Electrical Manufacturers Association
Provided by IHS under license with NEMA
No reproduction or networking permitted without license from IHS
Not for Resale

Among such unusual conditions are:

(a) Exposure to damaging fumes or vapors, excessive dust, explosive mixtures of dust, gases, steam, or excessive moisture, etc.

(b) Exposure to abnormal vibration, shocks, or tilting

(c) Unusual space limitations

(d) Occasional flooding

Table 1
Altitude Correction

Altitude		Correction Factors to be Applied to		
Feet	Meters	Voltage Rating	Current Rating	Ambient Temperature
(Col. 1)	(Col. 2)	(Col. 3)	(Col. 4)	(Col. 5)
3,300	1,000	1.00	1.00	1.00
4,000	1,200	0.98	0.99	0.99
5,000	1,500	0.95	0.99	0.98
10,000	3,000	0.80	0.96	0.92
16,000	4,900	0.63	0.93	0.85

NOTE: Correction factors in Columns 4 and 5 shall not be applied simultaneously.

4. Ratings & Test Requirements

4.1 Rating Information. The ratings of padmounted switchgear shall include the following:

(1) Rated frequency

(2) Rated maximum voltage

(3) Rated impulse withstand voltage

(4) Rated continuous and load interrupting current

(5) Rated momentary, making and one-second current

(6) Rated cable charging interrupting current

(7) Rated magnetizing interrupting current

4.2 Voltage Ratings and Related Test Requirements

Table 2
Voltage Ratings and Related Test Requirements

				Related Test Requirements			
				60 Hz – One Minute Withstand			Minimum Partial Discharge (Corona)
Line No.	Rated Maximum 3Ø Switches (Col. 1)	Voltage - kV 1Ø Switches (Col. 1A)	Rated Withstand Impulse Voltage, kV (Col. 2)	Design Test kV, rms (Col. 3)	Production Test kV, rms (Col. 4)	DC 15 Min. Withstand, kV (Col. 5)	Extinction Voltage kV, rms (Col. 6)
1	15.5	8.9	95	35	34	53	(See Notes)
2	27	15.5	125	60	40	78	—
3	38	21.9	150	70	50	103	—

NOTE: 1. When performing field tests involving open contacts in a vacuum, the tests should be performed in accordance with the American National Standard for Safety Requirements for X-Radiation Limits for AC High-Voltage Power Vacuum Interrupters Used in Power Switchgear, ANSI C37.85-1972.

2. Values for Partial Discharge Extinction Voltage are under consideration by the Working Group.

Copyright National Electrical Manufacturers Association
Provided by IHS under license with NEMA
No reproduction or networking permitted without license from IHS
Not for Resale

4.3 Current Test Values

Table 3
Continuous, Load Interrupting and Short-Time Current Test Values

Line No.	Rated Maximum 30 Switches (Col. 1)	Voltage - kV 10 Switches (Col. 1A)	Continuous and Load Interrupting Current, Amperes		Short-Time Current Amperes*, rms					
					Class 1		Class 2		Class 3	
			Main Switch (Col. 2)	Tap Switch (Col. 3)	Sym. (Col. 4)	Asym. (Col. 5)	Sym. (Col. 6)	Asym. (Col. 7)	Sym (Col. 8)	Asym. (Col. 9)
1	15.5	8.9	600	600	12,000	19,200	25,000	40,000	38,125	61,000
2	15.5	8.9	600	200	12,000	19,200	Not Applicable		Not Applicable	
3	27	15.5	600	600	12,000	19,200	25,000	40,000	38,125	61,000
4	27	15.5	600	200	12,000	19,200	Not Applicable		Not Applicable	
5	38	21.9	600	600	10,000	16,000	20,000	32,000	38,125	61,000
6	38	21.9	600	200	10,000	16,000	Not Applicable		Not Applicable	

* Short-time current ratings may be limited by the capabilities of bushings, connectors, or cables used on production switches. Design tests performed to substantiate the short-time values in Table 3 shall be made on switches with bushings, connector and cables of adequate capability.

Table 4
Cable Charging Interrupting and Magnetizing Interrupting Current Ratings

Line No.	Rated Maximum 30 Switches	Voltage - kV 10 Switches	Continuous and Load Interrupting Current Amperes, rms	Cable Charging Interrupting Current, Amperes, rms	Magnetizing Interrupting Current, Amperes, rms
	(Col. 1)	(Col. 1A)	(Col. 2)	(Col. 3)	(Col. 4)
1	15.5	8.9	600	10	21
2	15.5	8.9	200	10	7
3	27	15.5	600	15	21
4	27	15.5	200	15	7
5	38	21.9	600	20	21
6	38	21.9	200	20	7

4.3.1 Conditions of Continuous Current Rating:

(1) PMSG is used under the usual service conditions defined in 3.1.

(2) Current ratings shall be based on the total temperature limits of the materials used for such parts. A temperature rise reference is given to permit testing at reduced ambient.

(3) PMSG shall have their ratings based on a 40°C ambient temperature outside the enclosure.

4.3.2 Limits of Observable Temperature Rise. At rated current, the observable hottest spot temperature rise above ambient, and the total temperature of each of the various parts shall not exceed the following (see Table 4a).

Copyright National Electrical Manufacturers Association
Provided by IHS under license with NEMA
No reproduction or networking permitted without license from IHS
Not for Resale

Table 4a

Contacts, Conducting Joints, Bushing Terminals and Switch Insulation	Limit of Observable Hottest Spot Temperature Rise (Degrees C)*	Total Temperature (Degrees C)
Copper to Aluminum in Air	35	90
in Oil	15	70
Copper to Copper in Air	35	90
in Oil	15	70
Silver to Silver or equivalent in Air	50	105
in Oil	35	90
Oil 1 inch (2.5 cm) below surface (top oil)	30	85
Class 90°C Insulation	35	90
Class 105°C Insulation	50	105
Class 130°C Insulation	75	130
Class 155°C Insulation	100	155
Class 180°C Insulation	125	180
Class 220°C Insulation	165	220

* The limit of observable Hottest Spot Temperature Rise is based on a 40°C ambient air temperature with a 15°C solar radiation factor added. The "effective" ambient is therefore 55°C.

NOTES:

(1) When carrying rated continuous current, the steady state total temperature of the bushing terminals shall not exceed 75°C for 200A terminals and 90°C for 600A terminals.

(2) Contacts in other than oil or air may be operated at other temperatures providing it can be shown by experience or tests that accelerated deterioration will not occur.

(3) For the purpose of establishing temperature limits, insulating materials shall be classified as follows:

Class 90 Insulation: Materials or combinations of materials such as cotton, silk, and paper without impregnation. Other materials or combinations of materials may be included in this class if, by experience or accepted tests, they can be shown to be capable of operation at 90°C.

Class 105 Insulation: Materials or combinations of materials such as cotton, silk, and paper when suitably impregnated or coated, or when immersed in a dielectric liquid such as oil. Other materials or combinations of materials may be included in this class if, by experience or accepted tests, they can be shown to be capable of operation at 105°C.

Class 130 Insulation: Materials or combinations of materials such as mica, glass fiber, asbestos, etc., with suitable bonding substances. Other materials or combinations of materials, not necessarily inorganic, may be included in this class if, by experience or accepted tests, they can be shown to be capable of operation at 130°C.

Class 155 Insulation: Materials or combinations of materials such as mica, glass fiber, asbestos, etc., with suitable bonding substances. Other materials or combinations of materials, not necessarily inorganic, may be included in this class if, by experience or accepted tests, they can be shown to be capable of operation at 155°C.

Class 180 Insulation: Materials or combinations of materials such as silicone elastomer, mica, glass fiber, asbestos, etc., with suitable bonding substances such as appropriate silicone resins. Other materials or combinations of materials may be included in this class if, by experience or accepted tests, they can be shown to be capable of operation at 180°C.

Class 220 Insulation: Materials or combinations of materials that by experience or accepted tests can be shown to be capable of operation at 220°C.

Over Class 220 Insulation: Insulation that consists entirely of mica, porcelain, glass, quartz, and similar inorganic materials. Other materials or combinations of materials may be included in this class if, by experience or accepted tests, they can be shown to be capable of operation at temperatures over 220°C.

NOTES:

(1) Insulation is considered to be "impregnated" when a suitable substance provides a bond between components of the structure and also a degree of filling or surface-coverage sufficient to give adequate performance under the extremes of temperature, surface contamination (moisture, dirt, etc.), and mechanical stress expected in service. The impregnant must not flow or deteriorate enough at operating temperature so as to seriously affect performance in service.

(2) The electrical and mechanical properties of the insulation must not be impaired by the prolonged application of the limiting insulation temperature permitted for the insulation class. The word "impaired" is here used in the sense of causing any change that could disqualify the insulating material from continuously performing its intended function, whether it is creepage spacing, mechanical support, or dielectric barrier action.

(3) In the preceding definitions, the words "accepted tests" are intended to refer to recognized test procedures established for thermal evaluation of materials by themselves or in simple combinations. Experience or test date, used in classifying insulating materials, are distinct from the experience or test data derived for the use of materials in complete insulation systems. The thermal endurance of complete systems may be determined by applicable technical committees. A material that is classified as suitable for a given temperature in the preceding may be found suitable for a different temperature, either higher or lower, by an insulation system test procedure. For example, it has been found that some materials suitable for operation at one temperature in air may be suitable for a higher temperature when used in a system operated in an inert gas atmosphere.

(4) It is important to recognize that other characteristics, in addition to thermal endurance, such as mechanical strength and moisture resistance, are required in varying degrees in different applications for the successful use of insulating materials.

Copyright National Electrical Manufacturers Association
Provided by IHS under license with NEMA
No reproduction or networking permitted without license from IHS
Not for Resale

5. Design Tests

Design tests are those tests performed by the manufacturer to determine the adequacy of the design of a particular type, style, or model of equipment or its component parts for meeting its assigned ratings and for operating satisfactorily under normal service conditions or under special conditions, if specified, and may be used to demonstrate compliance with applicable standards of the industry.

Maintenance which could be expected to enhance subsequent design test results during the sequential testing shall not be performed on the PMSG. Such maintenance may be, but is not limited to replacing, filtering or reconditioning the insulation medium or repairing the current-carrying contacts. Equipment repairs may be made where it can be demonstrated that such repairs would not influence the cumulative conditioning effects of previous tests in the design test sequence.

5.1 General

5.1.1 Condition of PMSG to be Tested. The PMSG shall be new and in good condition.

5.1.2 Mounting of Switch. The switch shall be mounted in the usual service position for which it is designed.

5.1.3 Frequency. The frequency of the supply voltage shall be 60 Hz +0 −20 percent.

5.1.4 Single-phase Testing. Where single-phase testing to establish a three-phase rating is permitted (5.2.1, and 5.2.2) all such tests shall be performed with the other poles grounded. Testing of single-phase switches shall be under the conditions specified in the description of each test.

5.1.5 Test Sequence. The following design tests are to be performed on the same switched way and in the sequence listed. However, the individual interrupting tests under (1) below may be performed in any sequence, depending upon test facilities, but prior to the Momentary Current Test (2). The complete sequence of design tests need not be performed on each design modification of a previously certified PMSG design. To assure that the overall PMSG performance has not been adversely affected as a result of design modification, the manufacturer shall certify that the modified PMSG will pass all design tests omitted.

(1) Interrupting Current Tests	(5.2)
(a) Load Switching Tests	(5.2.1)
(b) Magnetizing Current Tests	(5.2.2)
(c) Cable Charging Test	(5.2.3)
(2) Momentary Current Test	(5.3.1)
(3) Making Current Test	(5.3.2)
(4) 60 Hz AC Withstand Test, Ref. Table 2, Col. 4	(5.4.5.3)
(5)Thermal Runaway Test	(5.5.5)
(6) Mechanical Operation Test	(5.6)

5.1.6 Other Tests. The following design tests shall also be made, not necessarily on the same PMSG, and in any sequence:

(1) 60 Hz AC Withstand Test, Ref. Table 2, Col. 3	(5.4.5.2)
(2) Impulse Withstand Tests	(5.4.4)
(3) Continuous Current Test	(5.5)
(4) Partial Discharge (Corona) Level Test	(5.7)
(5) DC Withstand Test	(5.8)
(6) One-Second Current Test	(5.3.3)
(7) Pressure Test	(5.9)
(8) Momentary Current Test*	(5.3.1.3)

* Does not have to be repeated if performed on the PMSG under 5.1.5

5.2 Interrupting Tests. The purpose of these tests is to verify that the switch is capable of closing and interrupting currents within its ratings.

5.2.1 Load Switching Tests. The switch shall be capable of switching all load currents up to and including the rated continuous currents shown in Columns 2 and 3 of Table 3.

The switch shall be tested at currents in accordance with the following table:

Table 5
Load Switching

No. of Operations Closing	No. of Operations Opening	Test Current, Percentage of Rated Continuous Current
20	20	Not less than 100
30	30	40–60
10	10	5–20

Closing and opening operations shall be randomly timed. The tests shall be made at the rated maximum voltage of the switch on a three-phase circuit at 80 percent lagging power factor or less, using one of the circuits shown in Figure II.

Where test facility circuit loading capability is limited, the tests at 5-20 and 40-60 percent current on a three-phase switch may be performed single-phase at 87 percent of the rated maximum voltage, but the tests at not less than 100 percent current must be made with circuit conditions specified in the paragraph immediately above. When single-phase tests are run at 5-20 and 40-60 percent current, the test sequence shall be run on each phase of the switch.

Tests on single-phase switches shall be made at the rated maximum voltage of the switch.

Copyright National Electrical Manufacturers Association
Provided by IHS under license with NEMA
No reproduction or networking permitted without license from IHS
Not for Resale

5.2.2 Magnetizing Current Tests. The switch shall be capable of closing and interrupting magnetizing current. The test circuit (see Figure III) shall consist of an actual transformer or be composed of resistance connected in parallel with iron core reactance of such magnitude as to produce the required test current shown in Column 4 of Table 4 (±20 percent) at rated maximum voltage at a power factor between 5 percent and 10 percent lagging.

A single-phase test may be conducted on a three-phase switch at 87 percent of rated maximum voltage. Single-phase switches shall be tested at the rated maximum voltage of the switch.

The switch shall close and interrupt the specified current during a minimum of 10 randomly timed operations (thirty operations, 10 on each pole, if tests are single-phase on a three-phase switch). Sufficient time shall be allowed after closing to permit transients to subside. Current shall be measured after transients have subsided using an rms responding instrument.

5.2.3 Cable Charging Current Tests. The switches shall be capable of closing and interrupting the rated cable charging current shown in Column 3 of Table 4. The test circuit shall be as shown in Figure IV. The neutral of the source and the neutral of the wye-connected capacitor bank are to be grounded.

Tests shall be made at the rated maximum voltage of the switch.

A single-phase test may be conducted on a three-phase switch at 58 percent of rated maximum voltage. Single-phase switches shall be tested at the rated maximum voltage of the switch.

The switch shall close and interrupt not less than the specified steady-state cable charging current during a minimum of 20 randomly timed operations (60 operations, 20 on each pole, if tests are single-phase on a three-phase switch). The maximum transient overvoltage produced during these tests shall not exceed 2.5 times the peak line-to-ground voltage.

5.3 Short-Time Current Tests. The purpose of these tests is to verify that the PMSG is capable of withstanding momentary, making and one-second currents (Table 3) to which the equipment may be exposed in partially overhead and underground circuits.

5.3.1 Momentary Current Tests

5.3.1.1 Test Conditions. The switch shall have previously been subjected to the interrupting tests (5.2), and an additional fifty mechanical de-energized close-open operations. Conductors used in this test shall be solidly connected at right angles to the switch bushing.

Momentary current tests may be made at any voltage (above 50 volts) up to rated voltage of the switch.

Three-phase switches shall be tested on a three-phase circuit (see Figure VI).

5.3.1.2 Test Procedure. The switch shall withstand 3 sets of momentary tests. Each set shall include a sequence of 3 periods of current flow with 10 seconds, plus or minus 1 second, between each of the 3 periods, to simulate typical reclosing operations. The duration of each period shall not be less than 10 cycles.

The rms value of the first major loop of the current wave of one phase of the first period of current flow of each set, shall be not less than the rated asymmetrical short-time current value in Table 3. The magnitude shall be measured in accordance with ANSI/IEEE C37.09-1979, "Test Procedure for AC High-Voltage Circuit Breakers Rated on a Symmetrical Current Basis."

5.3.1.3. If the PMSG has not been tested per 5.3.1.1 and 5.3.1.2, it shall be tested to demonstrate the mechanical adequacy of the busses and connections.

The PMSG shall withstand 3 sets of momentary tests. Each set shall include a sequence of 3 periods of current flow with 10 seconds, plus or minus 1 second, between each of the 3 periods, to simulate typical reclosing operations. The duration of each period shall not be less than 10 cycles.

The rms value of the first major loop of the current wave of one phase of the first period of current flow of each set, shall be not less than the rated asymmetrical short-time current value in Table 3. The magnitude shall be measured in accordance with ANSI/IEEE C37.09-1979, "Test Procedure for AC High-Voltage Circuit Breakers Rated on a Symmetrical Current Basis."

5.3.2 Making Current Test

5.3.2.1 Test Conditions. The Making Current Test shall be conducted following the Momentary Current Test (5.3.1).

Conductors used in this test shall be connected at right angles to the switch bushing.

This test shall be made at rated maximum voltage of the switch. Three-phase switches shall be tested on three-phase circuits (see Figure VI).

5.3.2.2 Test Procedure. The test shall consist of 3 closing operations at the symmetrical current test value listed in Table 3. At least one of the closing operations shall have the rms value of the first major loop of the current wave of one phase equal to the asymmetrical value specified.

Copyright National Electrical Manufacturers Association
Provided by IHS under license with NEMA
No reproduction or networking permitted without license from IHS
Not for Resale

The magnitude shall be measured in accordance with ANSI/IEEE C37.09-1979, "Test Procedure for AC High-Voltage Circuit Breakers Rated on a Symmetrical Current Basis." The minimum duration of current for each operation shall be 10 cycles. Sufficient time may be allowed between operations for the contacts to cool.

5.3.3 One-Second Current Test

5.3.3.1 Test Conditions. The PMSG should not have previously been subjected to any interrupting tests. Bushings may be changed for this test to accommodate conductors of sufficient thermal capacity. This test may be made at any voltage up to the rated voltage of the PMSG.

Three-phase PMSG may be tested on a three-phase circuit (see Figure VI), or may be tested single-phase by tying two adjacent phases in series.

5.3.3.2 Test Procedure. The PMSG shall be subjected to a single current carrying test of one second minimum duration at the symmetrical short-time current value shown in Table 3. For practical purposes, this current shall be taken as the integrated heating equivalent of the one-second rating: The maximum application period shall not exceed two seconds.

5.3.3.3 Condition of PMSG After Test. There shall be no visible damage to the PMSG after the tests have been completed. However, the tests may result in some visual evidence of the device having passed current, such as slight contact markings.

When slight contact marking occurs, *or when visual inspection is not feasible,* rating shall be considered met when the device will withstand repeated mechanical operations without cumulative damage and is capable of carrying its rated continuous current without exceeding the temperature limits specified for the device being tested.

5.4 Dielectric Tests. Insulation withstand tests are made to determine the ability of the insulating materials and spacing to withstand specified overvoltages for a specified time without puncture or flashover.

5.4.1 Points of Application of Test Voltage. The dielectric withstand test voltage shall be applied:

(a) across open contacts

(b) from phases to ground (switch[es] open and closed)

(c) between phases (switch[es] open and closed)

During the tests the tank case and all unenergized terminals shall be grounded.

5.4.2 Temperature. Dielectric tests shall be made at the temperature prevailing in the test area.

5.4.3 Dielectric Test Procedures and Voltage Measurements. The dielectric test procedures and the methods of voltage measurements shall be in accordance with IEEE Standard No. 4, *Standard Techniques for High-Voltage Testing.*

If terminations (see Sec. 8.8) capable of meeting the specified dielectric test voltages are not available, other terminations (bushings and/or connectors) may be substituted for the purpose of performing this test.

5.4.4 Impulse Withstand Tests. PMSG shall withstand a full wave 1.2 x 50 microsecond voltage of Table 2, with a virtual front time, based on the rated full wave impulse voltage, equal to or less than 1.2 microseconds, with a crest voltage equal to or exceeding the rated impulse withstand voltage, and with a time to the 50 percent value of the crest voltage equal to or greater than 50 microseconds. At least three positive and three negative impulses shall be applied to the test specimen. If a flashover occurs on only one test during any group of three consecutive tests, three more tests shall be made. If the PMSG withstands all three of the second group of tests, the flashover in the first group shall be considered a random flashover and the PMSG shall be considered as having passed the test. If an additional flashover occurs, the PMSG shall be considered to have failed the test.

5.4.5 60 Hertz Withstand Tests.

5.4.5.1 Test Procedure. Low frequency withstand test voltages shall be applied having a crest value equal to 1.414 times the rated low frequency withstand test shown in column 3 or 4 of Table 2. The wave shape shall be as close to a sine wave as practicable. The test voltage shall be raised to the specified value within 30 seconds.

5.4.5.2 Test for Rated 60 Hertz Withstand. Rated 60 Hertz Withstand Tests, reference 5.1.6(1), shall be performed at the value from Table 2, Col. 3. The PMSG shall withstand the specified voltage for one minute with no disruptive discharge. Failure of a bushing will not invalidate this test if the bushing can be replaced and test passed. The test can also be performed if desired with enhanced insulation on bushings since the intent is to prove insulation of PMSG internal parts rather than to demonstrate that the bushings can make the PMSG rating.*

* At the time of the writing of this standard, separable connectors were not available with ratings corresponding to the desired switch ratings.

Copyright National Electrical Manufacturers Association
Provided by IHS under license with NEMA
No reproduction or networking permitted without license from IHS
Not for Resale

5.4.5.3 Test for 60 Hertz Withstand Following Making Current Test. Following the making current test (5.3.2), the switch shall be subjected to a 60 Hertz Withstand Test, reference 5.1.5(4) at the value from Table 2, Col. 4. This is the same value as used for production tests. The switch shall withstand the specified voltage for one minute with no disruptive discharge.

5.5 Continuous Current Test. The PMSG shall meet the conditions of continuous current rating and limits of observable temperature rise as specified in 4.3.1 and 4.3.2, respectively, when tested as outlined in 5.1 and as follows:

5.5.1 Test Conditions. The PMSG shall be installed in a closed room substantially free from air currents other than those generated by heat from the PMSG being tested.

5.5.2 Connections. The PMSG shall have terminations in accordance with ANSI/IEEE 386-1985, "Separable Insulated Connectors," and have conductors at least 4 feet long. The conductors shall be 1,000 kcmil aluminum, or equivalent, for 600A terminations; and 4/0 AWG aluminum, or equivalent, for 200A terminations.

5.5.3 Test Procedure. The rated continuous current of a PMSG at rated frequency shall be applied continuously to all three phases until the temperature becomes stable. The temperature shall be considered stable when 3 consecutive values of temperature rise taken at 30-minute intervals at all points where readings are being taken show a maximum variation of one degree. All temperature determinations shall be made as follows:

5.5.3.1 Method of Temperature Determination. This method consists of the determination of temperature by thermocouples, or by mercury, spirit, or resistance thermometers.

5.5.3.2 Value of the Ambient Temperature. The value of the ambient temperature during these tests shall be taken as that of surrounding air and shall not be less than 10°C nor more than 40°C.

5.5.4 Determination of the Ambient Temperature

5.5.4.1 Placing of Thermocouples (Thermometers). The ambient temperature shall be determined by means of a thermocouple (thermometer) placed 12 inches (30 cm) above and 12 inches (30 cm) to one side of the PMSG.

5.5.4.2 Use of Oil Cup. In order to avoid errors due to the time lag between the temperature of apparatus and the variations in the ambient temperature, all reasonable precautions must be taken to reduce these variations and the errors arising therefrom. Thus, when the ambient temperature is subject to such variations that error in taking the temperature rise might result, the thermocouple (thermometer) for determining the ambient temperature should be immersed in a suitable liquid (such as oil), in a suitable heavy cup. A convenient form for such an oil cup consists of a metal cylinder with a hole drilled partly through it. This hole is filled with oil and the thermocouple (thermometer) response to various rates of temperature change will depend largely upon the size, kind of material and the mass of the containing cup and may be further regulated by adjusting the amount of oil in the cup. The larger the apparatus under test, the larger should be the metal cylinder employed as an oil cup in the determination of the cooling air temperature. The smallest size of oil cup employed in any case shall consist of a metal cylinder 1 inch (25 mm) in diameter and 2 inches (50 mm) high.

5.5.5 Thermal Runaway Test. The purpose of this test is to verify that the switch, after being subjected to Tests 1 thru 4 of 5.1.5, will operate at a stable temperature while carrying rated continuous current.

Test conditions and procedures shall be the same as for the Continuous Current Test (5.5). The switch shall have passed this test if the temperature stabilizes as indicated by consecutive readings at 30-minute intervals. The limits of observable temperature rises may be exceeded.

NOTE: The thermal runaway test requires that thermocouples and leads be installed at various points on the switch blades, contacts, bus bars, etc. It may be necessary to untank, partially disassemble and reassemble, drill holes for thermocouples, etc. before or after the thermal runaway test. It shall be understood that such work does not constitute "maintenance."

5.6 Mechanical Operation Test. The purpose of this test is to verify that the switch can complete a specified number of opening and closing operations without maintenance or replacement of any parts or components and is to be run following the Thermal Runaway Test 5.5.5.

5.6.1 Test Procedure. The mechanical operation test shall consist of 200 de-energized close-open operations.

5.6.2 Condition After Test. The switch shall be mechanically operable and capable of carrying the

Copyright National Electrical Manufacturers Association
Provided by IHS under license with NEMA
No reproduction or networking permitted without license from IHS
Not for Resale

rated continuous current without thermal runaway and passing the 60 Hertz Withstand Voltage Test, reference Table 2 Col. 4.

NOTE: The means of showing ability to carry rated current is optional. For example, it may be accomplished by means of a DC resistance test. It is not necessary to repeat the Thermal Runaway Test.

5.7 Partial Discharge (Corona) Test. (This section is presently being studied by committees and will be published when available.)

5.8 DC Withstand Test. The purpose of this test is to verify that the PMSG is capable of withstanding the DC test voltages that may be applied to installed cable systems.

5.8.1 Test Procedure. The rated DC 15-minute withstand voltage of negative polarity shall be applied to the PMSG. Points of application of voltage shall be as specified in 5.4.1. The voltage shall be raised gradually to the specified test voltage (Col. 5, Table 2) and maintained at that voltage for 15 minutes.

NOTE: Field tests of PMSG or associated cables must only be performed when all ways of the switch and cables are completely isolated from all system voltages.

5.9 Pressure Test. The purpose of this test is to verify that PMSG with sealed tanks will withstand pressure and remain operable when subjected to a positive pressure resulting from the operation of the switch (e.g., temperature rise, load interrupting and fault closing).

5.9.1 Pressure Test Procedure. For this test the PMSG shall be pressurized to the maximum operating pressure conditions expected during maximum temperature, altitude, etc., as specified herein. The tank shall not deform sufficiently to impair operation of the switch.

6. Production Tests

Production tests are those tests made to check the quality and uniformity of the workmanship and materials used in the manufacture of padmounted switchgear. The PMSG shall meet the production tests described in 6.1 thru 6.4 inclusive (6.5 if required). Production tests shall be performed on every completely assembled and sealed PMSG.

6.1 Circuit Resistance Test. The purpose of this test is to verify that all PMSG contacts have been properly aligned and current transfer points have been properly assembled.

The DC resistance of the current carrying circuit from terminal to terminal of each pole unit in the closed position shall be measured with current of at least ten (10) amperes flowing. The resistance shall not exceed a limit specified by the manufacturer.

6.2 60 Hz Withstand Test. The tests shall be performed in accordance with 5.4. The test value shall be from Table 2, Col. 4.

6.3 Leak Test. The leak test is intended to verify that a leak does not exist which will impair the dielectric integrity of the PMSG during its contemplated service life.

Each PMSG with sealed tanks shall be tested to verify that it does not leak by pressurizing it to 7 psig or its maximum operating pressure, whichever is greater, for at least 24 hours without any detectable leaks. Time may be reduced by use of any equivalent test such as pressurizing the PMSG to the appropriate value and applying a soap solution, alcohol and chalk or pressurizing the PMSG with Freon (TM) or similar gas and using a halogen leak detector.

6.4 Operating Assurance Tests. Each switch shall be operated and tested to verify:

(a) That the switch position indicators and contacts are in correct position for both open and closed position.

(b) That the insulating medium quantity indicator (if provided) is functioning properly.

(c) That the PMSG circuit configuration is shown correctly.

6.5 Partial Discharge (Corona) Tests. (This section is presently being studied by committees and will be published when available.)

7. Conformance Tests

If conformance tests are required by the purchaser, they shall be made in accordance with this standard.

7.1 Temperature Measurements. When temperature measurements are required for conformance tests, it is sufficient to measure accessible parts and compare with like points on the design tests.

7.2 Impulse Withstand Tests. When impulse tests are required for conformance tests, PMSG shall be capable of passing a 1.2 x 50 microsecond full wave impulse voltage test series with values as specified by the purchaser in accordance with the following: A virtual front time, based on the rated full wave impulse voltage equal to or less than 1.2 microseconds, with a crest voltage not less than the rated full wave impulse withstand voltage, and with a time to 50 percent value of the crest voltage not less than 50 microseconds. The test procedure used shall be in accordance with 5.4.4.

Copyright National Electrical Manufacturers Association
Provided by IHS under license with NEMA
No reproduction or networking permitted without license from IHS
Not for Resale

7.3 Loop Current Requirement. The application of the switch may require it to interrupt the current in a loop circuit. However, the resulting voltage across each switch contact should typically not exceed 10 percent of the maximum rated voltage.

If tests are necessary to demonstrate this capability, the switch shall interrupt the current value shown in column 2 or column 3 of Table 3 at not less than 10 percent of the rated maximum voltage. The test circuit shown in Figure V shall be used.

8. Construction Requirements

8.1 Grounding Provision. Means shall be provided for each way in each cable compartment for attaching a ground conductor using a ½-inch fastener. Such means shall be welded to the enclosure.

8.2 Manual Operating Provisions. The direction of operation of manual operating handles shall be apparent. Handles should turn clockwise to close, counterclockwise to open; or "in" to close and "out" to open. The force required to operate a handle shall be such that one man in a standing position can readily operate it.

Manual operating handles when located within the cable terminating compartment, shall be operable with standard live-line tools.

The switch mechanism shall be designed so that operation does not require any special skills and the closing and opening speeds of the contacts are independent of the speed at which the operating handle is operated.

Manual operating handles shall be capable of being padlocked in the open and in the closed positions.

8.3 Position Indicators. Switches shall be provided with position indicators, or other suitable means, which clearly and positively indicate the "open" and "closed" position of the contacts. The indicators shall be visible from the surface with the enclosure open. If colors are used to indicate an "open" and "closed" position, RED shall signify closed and GREEN shall signify open, with the words, "open" and "closed" in contrasting colors. Corrosion resistant and legible lettering (raised or engraved) shall be used.

8.4 Insulating Medium Quantity Indicators. Where liquid or gas is used as the insulating medium, provision shall be made for personnel to readily determine the insulating liquid level or insulating gas pressure with the PMSG energized. Indicator markings shall show the safe operating levels or pressures over the temperature range specified in 3.1. Procedures or devices which require exposing the insulating medium to the outside environment shall not be used.

8.5 Drain and Replacement Provisions. Where liquid or gas is used as the insulating medium, provision shall be made to facilitate replacement of the insulating medium with PMSG de-energized.

8.6 Sampling and Addition Provisions. When a liquid is used as an insulating medium provisions shall be made to obtain a bottom sample with the PMSG energized.

Provisions shall also be made for adding the insulating medium, liquid or gas, with the PMSG energized.

8.7 Enclosure Construction.

8.7.1 Cable terminating compartments shall meet the requirements of the NEMA design test for enclosure security of padmounted compartmental transformers, NEMA TR 1-2.01.

8.7.2 Padmounted switchgear shall be constructed so that it can be lifted into place on the mounting pad without disturbing the entrance cables.

8.7.3 All cable termination compartments access doors shall have padlocking provisions. In addition, unless otherwise specified, these access doors shall have a second securing feature, a penta-head bolt, as shown in Figure VII.

8.7.4 Compartment doors shall be large enough to provide adequate working space when open and shall have positive means of latching in the open position.

8.7.5 Parking stands shall be provided for each bushing. (For parking stand dimensions see ANSI C57.12.26-1975, Figure 5.)

8.7.6 PMSG bushings shall accommodate cable termination in accordance with ANSI/IEEE Standard 386-1985.

8.7.7 PMSG bushings shall be designated and legibly marked adjacent to each bushing.

8.7.8 Protective Coating. PMSG shall be furnished with a weather resistant color finish as specified in ANSI Standard Z55.1, ANSI, ANS, GRAY FINISHES FOR INDUSTRIAL APPARATUS AND EQUIPMENT, Z55.1-1967 (R1973), unless otherwise specified. Alternate finish colors may be identified in the C37/57 CABINET INTEGRITY GUIDE and shall be specified by the user. The finish shall pass the following rust resistance test.

8.7.8.1 Rust-Resistance Test. The rust-resistance test applies to all enclosures incorporating external ferrous parts. Nonferrous enclosures with no external ferrous parts need not be tested.

The rust-resistance test shall be performed to insure the adequacy of coatings to inhibit the buildup of rust on ferrous metal materials used for enclosures.

Copyright National Electrical Manufacturers Association
Provided by IHS under license with NEMA
No reproduction or networking permitted without license from IHS
Not for Resale

A. *Method*

1. *Test Specimens.* Representative test panels of a 3 inch (76.2 mm) by 6 inch (152.4 mm) minimum size that can be accommodated by the test chamber shall be provided. Each specimen shall be uniformly processed in the standard production coating system. At least 4 panels shall be selected for the test. All the test specimens shall be of standard gauge ferrous metal equivalent to that used for the enclosure. The specimen shall be allowed to age for a minimum of seven days before being tested.

2. *Test Apparatus.* The test apparatus shall consist of a fog chamber, salt solution reservoir, compressed air supply, provisions for heating and means of control. The conditions in the salt spray chamber including the positioning of the specimens, content of the salt solution and temperature and pressure to be maintained, shall be as defined in the ASTM STANDARD METHOD OF SALT SPRAY TESTING — DESIGNATION: B117-73.

3. *Preparation of Test Specimens.* Two of the test panels shall be suitably scribed for testing in accordance with the ASTM STANDARD METHOD OF EVALUATION OF PAINTED OR COATED SPECIMENS SUBJECTED TO CORROSIVE ENVIRONMENTS — DESIGNATED D-1654-74.

4. *Exposure of Test Specimens.* All test specimens shall be tested in the salt spray chamber for a period of 200 hours continuously except for the short daily interruptions necessary to inspect the test specimen or replenish the solution in the reservoir.

5. *Procedure.* After completion of the exposure period, the scribed specimens shall be processed in accordance with either Method A (tape) or Method B (scraper) as defined in ASTM DESIGNATION — D1654-74.

B. *Evaluation*

1. *Procedure.* The scribed specimens shall then be evaluated for creepage from the scribe mark in accordance with RATING SCHEDULE #1 OF ASTM DESIGNATION D1654-74. The non-scribed specimens shall be evaluated for degree of blistering in accordance with STANDARD METHOD OF EVALUATION DEGREE OF BLISTERING OF PAINTS ASTM — DESIGNATION D714-56.

2. *Criteria.* The scribed specimens shall be judged to have met the requirements of the test if their rating number is 5 or higher as determined by ASTM D1654-74.

The non-scribed specimens shall be judged to have met the requirements of the test if their blistering size is No. 6 or higher, and their frequency designation is F or M as determined by ASTM D714-56.

8.7.8.2 An undercoating under the regular finish shall be applied to all surfaces that are in contact with the pad and two inches up each side.

8.7.9 A one-inch miminum internal flange shall be provided at the base of the compartments to provide means of anchoring unit to the pad.

8.7.10 The cable terminating compartments shall be electrically bonded to each other.

8.8 Nameplate. A nameplate of stainless steel or other corrosion resistant material shall be provided. The nameplate shall be securely attached to tank or compartment interior by means of stainless steel screws, rivets, or other corrosion resistant fasteners. All letters, schematics and numbers shall be stamped, embossed or engraved on the nameplate. The nameplate shall contain at least the following information:

(a) The word "Padmounted Switchgear"
(b) Name of manufacturer
(c) Date of manufacture (month and year, e.g., 1-80)
(d) Serial Number
(e) Model number or style number (if any)
(f) Rated maximum voltage
(g) Rated impulse withstand voltage
(h) Rated continuous current
(i) Rated load interrupting current
(j) Rated momentary current
(k) Rated making current
(l) A three-line, bushing-oriented schematic diagram, using standard symbols (This may be on a separate nameplate)
(m) Total weight (including insulating medium)
(n) Type and quantity of insulating medium

8.8.1 User Identification Plate. Space and provisions for attaching a user identification (switch number) plate shall be provided adjacent to each switch handle, when specified. Dimensions of this plate are shown in Figure VIII.

9. Shipping Requirements

9.1 The PMSG shall be completely assembled and, unless otherwise specified, include the correct amount of insulating medium considering the temperature of the medium.

9.2 Plugs shall be provided for threaded holes and caps shall be provided for threaded studs and bushings.

9.3 Instructions and checklists for the inspection, installation and maintenance of the PMSG shall be provided.

9.4 PMSG shall be properly packaged and braced to prevent damage during shipment.

Copyright National Electrical Manufacturers Association
Provided by IHS under license with NEMA
No reproduction or networking permitted without license from IHS
Not for Resale

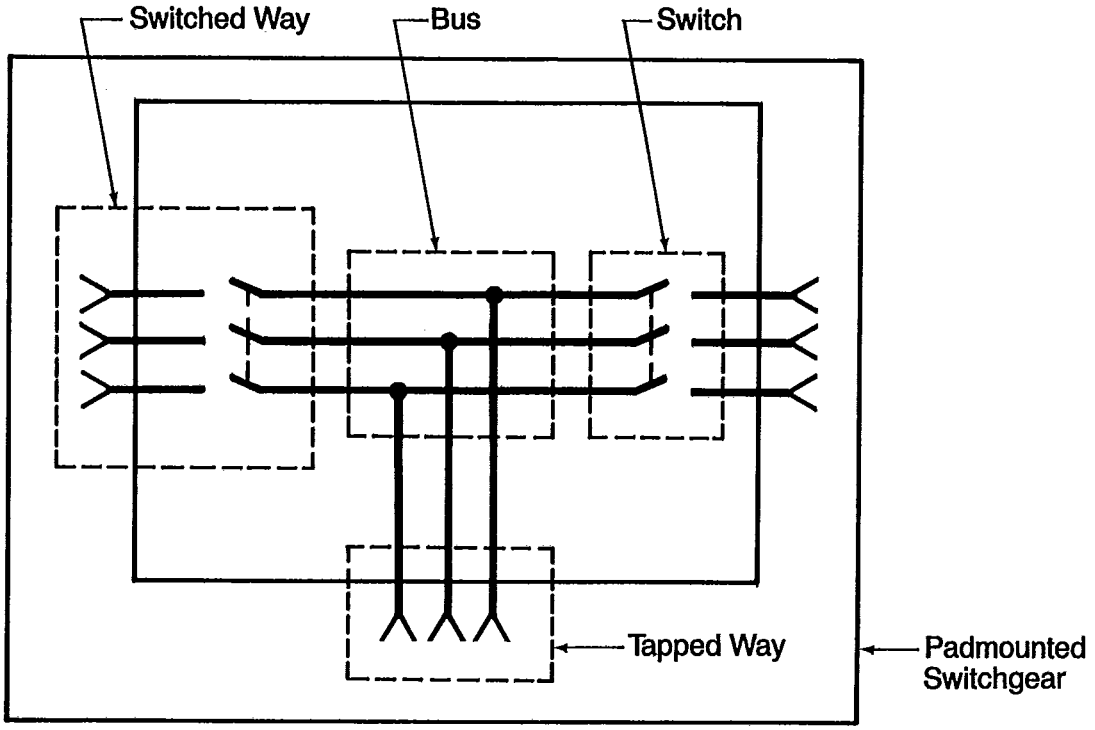

FIGURE 1
Example Using Definitions from Section-2
(3-way padmounted switchgear shown)

Copyright National Electrical Manufacturers Association
Provided by IHS under license with NEMA
No reproduction or networking permitted without license from IHS
Not for Resale

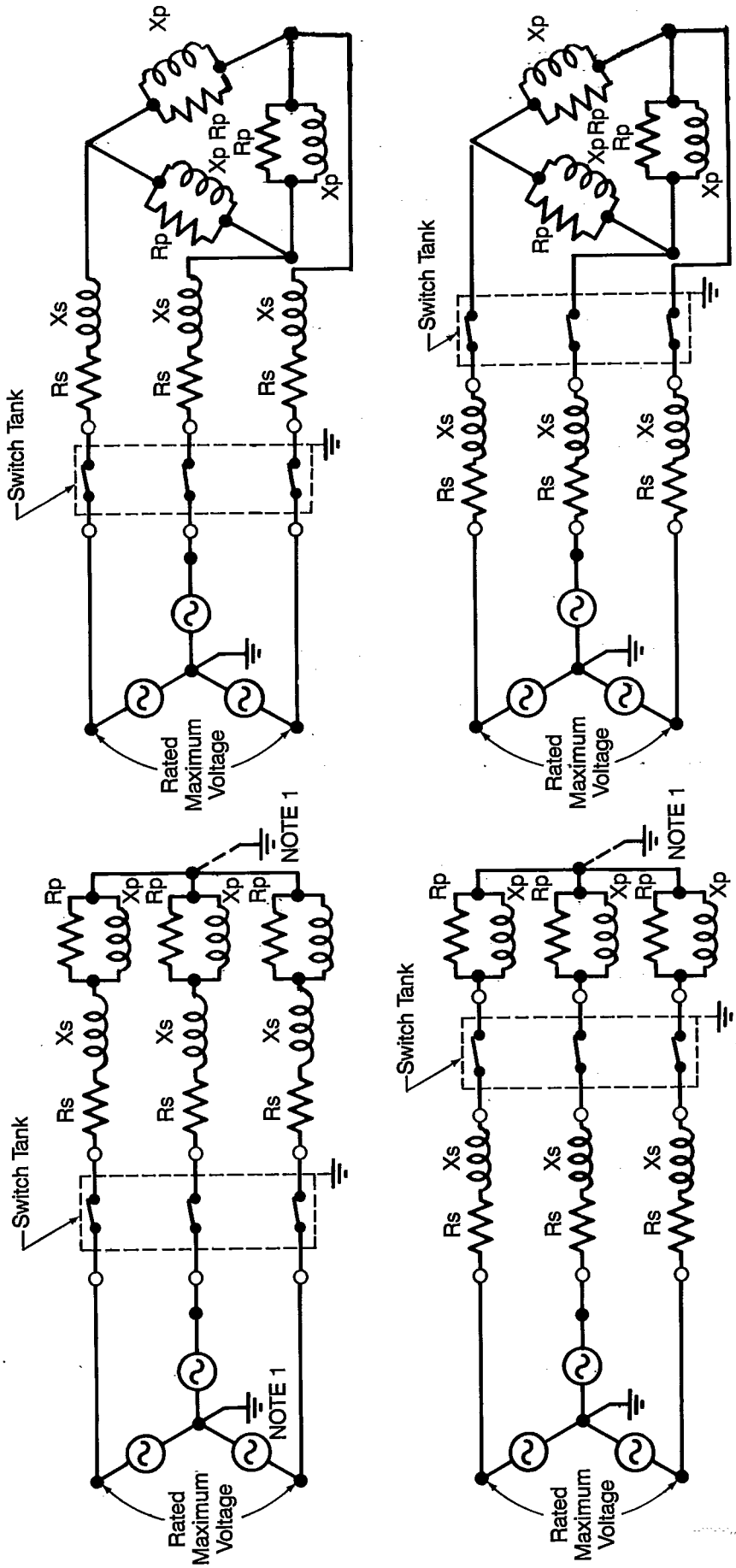

Z_s = 10% TO 20% OF $\frac{\text{Rated Maximum Voltage}}{\sqrt{3} \times \text{Rated Switching Current}}$

$\frac{X_s}{R_s}$ = 5 TO 7

Power Factor = 80% or Less Lagging.

NOTE 1: Either the neutral of the load *or* the source may be grounded but *not* both.

NOTE 2: Once calculated for a specific test series, Z_s remains the same for the reduced current interrupting tests.

FIGURE II
Load Switching Test Circuits

Copyright National Electrical Manufacturers Association
Provided by IHS under license with NEMA
No reproduction or networking permitted without license from IHS
Not for Resale

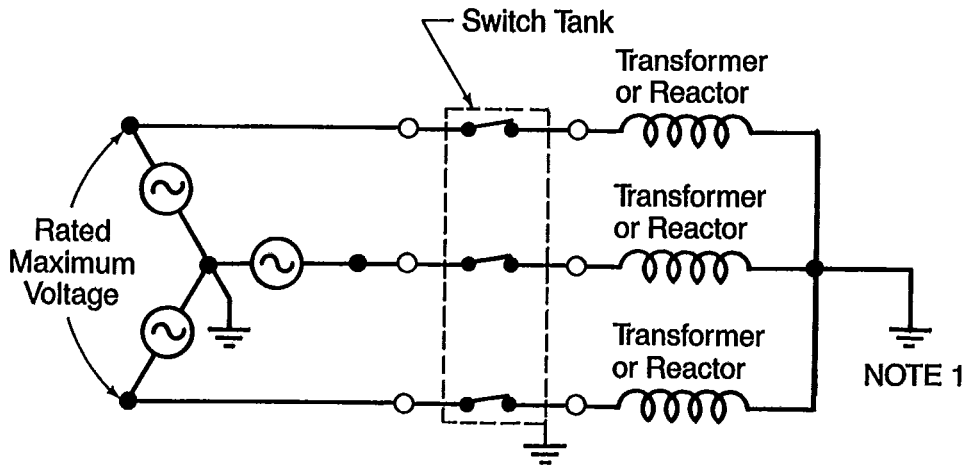

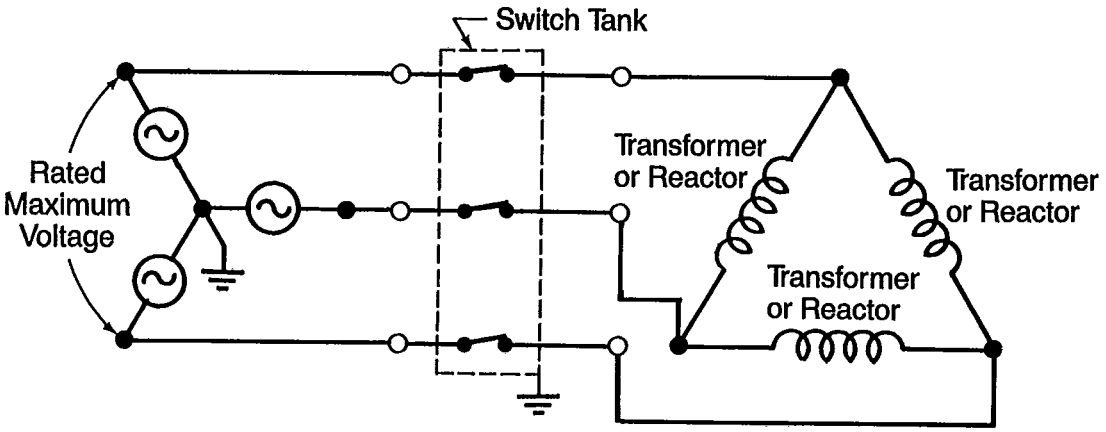

NOTE 1: Either the neutral of the load *or* the source is to be grounded but *not* both.

FIGURE III
Magnetizing Current Test Circuits

Copyright National Electrical Manufacturers Association
Provided by IHS under license with NEMA
No reproduction or networking permitted without license from IHS
Not for Resale

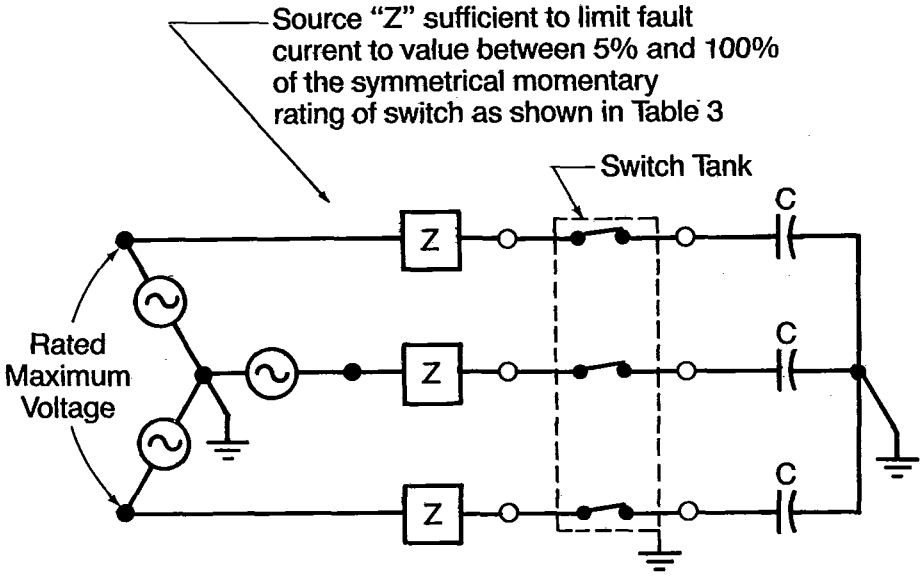

C = Phase Capacitor Bank

FIGURE IV
Cable Charging Current Test Circuit

Copyright National Electrical Manufacturers Association
Provided by IHS under license with NEMA
No reproduction or networking permitted without license from IHS
Not for Resale

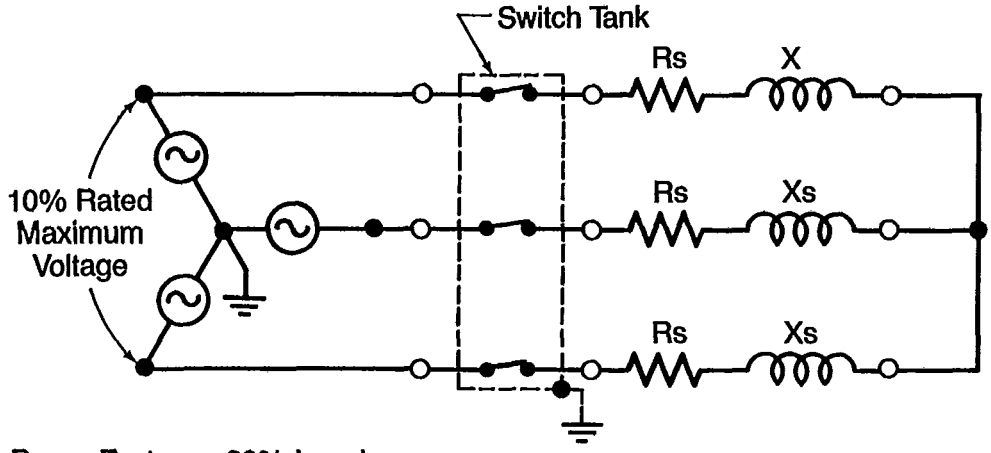

Power Factor = 30% Lagging.

Either the neutral of the load *or* the source may be grounded but *not* both.

FIGURE V
Loop Current Interruption Test Circuit

Copyright National Electrical Manufacturers Association
Provided by IHS under license with NEMA
No reproduction or networking permitted without license from IHS
Not for Resale

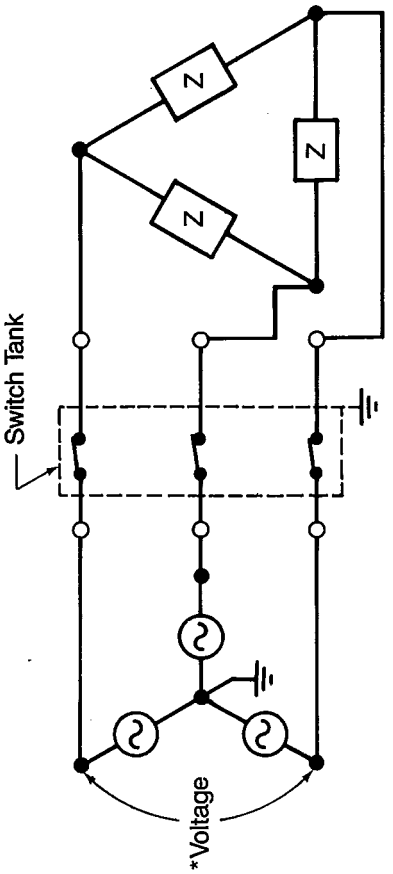

$\frac{X}{R}$ = 15 or Greater

NOTE 1: Either the Neutral of the Load or the Source is to be Grounded, But *not* Both.

*Refer to Section 5.3 for Voltage Limitations.

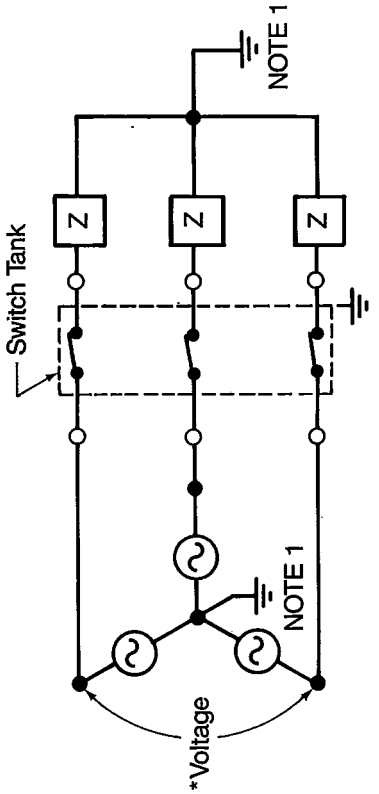

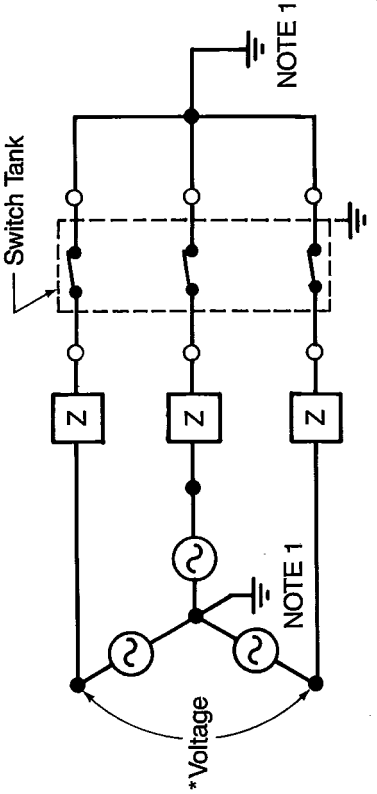

FIGURE VI
Short-Time Current Test Circuits

Copyright National Electrical Manufacturers Association
Provided by IHS under license with NEMA
No reproduction or networking permitted without license from IHS
Not for Resale

FIGURE VII

Padmounted Equipment Security
Details of Recessed, Captive Penta-Head Bolt
to be Provided on all Access Doors
(In Addition to Padlocking Provisions)

Material: The penta-head bolt and its mating nut shall be rust and corrosion resistant alloys (such as AISI Type 304 passivated stainless steel or equivalent).

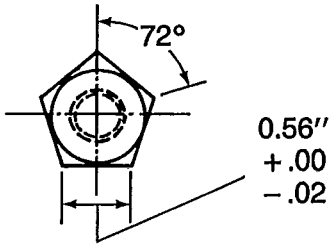

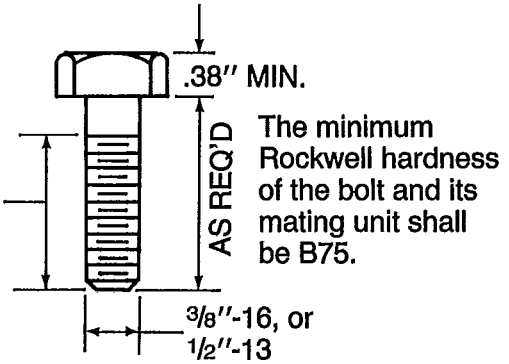

Thread length per American National Standard. Square & Hex Bolts & Screws, B18.2.1-1972.

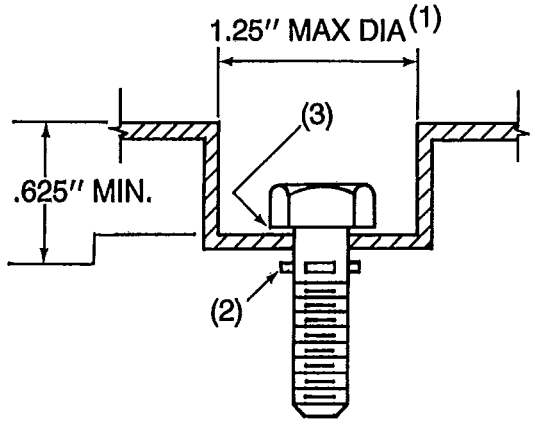

PREFERRED METHOD

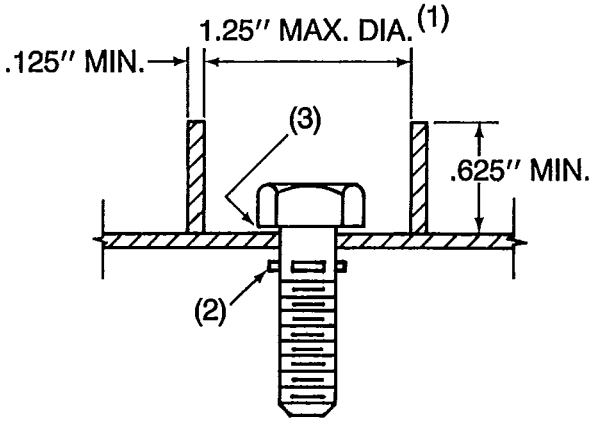

ACCEPTABLE ALTERNATE METHOD

CROSS SECTION OF RECESSED NON-ROTATING CUP

(1) O.D. of Socket Wrench = 1.12″
(2) Bolt to be pinned or otherwise held captive.
(3) Flat washer under bolt head not shown.

Copyright National Electrical Manufacturers Association
Provided by IHS under license with NEMA
No reproduction or networking permitted without license from IHS
Not for Resale

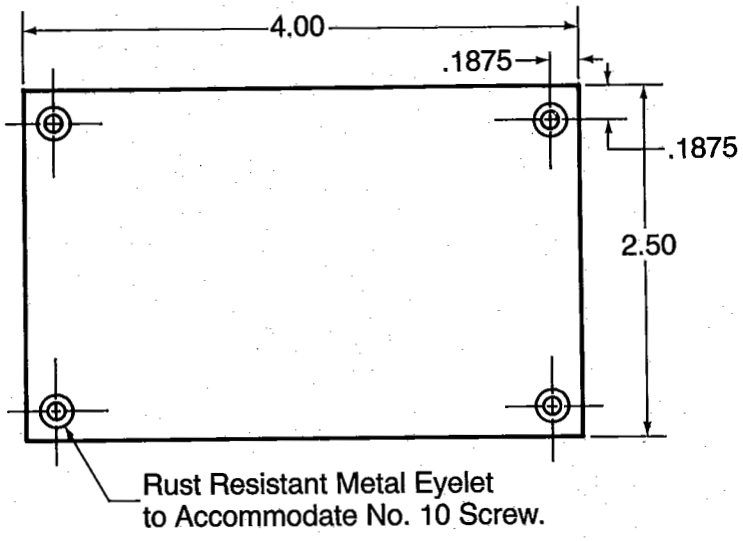

FIGURE VIII
Outline For User Identification Plate

Copyright National Electrical Manufacturers Association
Provided by IHS under license with NEMA
No reproduction or networking permitted without license from IHS
Not for Resale