0724150 0558274 548

AMERICAN NATIONAL STANDARD

American National Standard

ANSI C37.58a-1997
(Supplement to ANSI C37.58-1990)

American National Standard

Supplement to Indoor AC Medium-Voltage Switches for Use in Metal-Enclosed Switchgear— Conformance Test Procedures

Reproduced By GLOBAL ENGINEERING DOCUMENTS With The Permission Of NEMA Under Royalty Agreement

NATIONAL ELECTRICAL MANUFACTURERS ASSOCIATION
1300 NORTH 17TH STREET, SUITE 1847, ROSSLYN, VA 22209
(703) 841-3200 FAX: (703) 841-3300

Copyright National Electrical Manufacturers Association
Provided by IHS under license with NEMA
No reproduction or networking permitted without license from IHS
Not for Resale

0724150 0558275 484

C37.58a-1997
(Supplement to ANSI C37.58-1990)

AMERICAN NATIONAL STANDARD

Supplement to Indoor AC Medium-Voltage Switches for Use in Metal-Enclosed Switchgear—Conformance Test Procedures

Secretariat

Institute of Electrical and Electronics Engineers
National Electrical Manufacturers Association

Approved

American National Standards Institute, Inc.

Copyright National Electrical Manufacturers Association
Provided by IHS under license with NEMA
No reproduction or networking permitted without license from IHS
Not for Resale

0724150 0558276 310

ANSI 37.58a-1997
(Supplement to ANSI C37.58a-1990)

American National Standard

Approval of an American National Standard requires verification by ANSI that the requirements for due process, consensus, and other criteria for approval have been met by the standards developer.

Consensus is established when, in the judgment of the ANSI Board of Standards Review, substantial agreement has been reached by directly and materially affected interests. Substantial agreement means much more than a simple majority, but not necessarily unanimity. Consensus requires that all views and objections be considered, and that a concerted effort be made toward their resolution.

The use of American National Standards is completely voluntary; their existence does not in any respect preclude anyone, whether he has approved the standards or not, from manufacturing, marketing, purchasing, or using products, processes, or procedures not conforming to the standards.

The American National Standards Institute does not develop standards and will in no circumstances give an interpretation of any American National Standard. Moreover, no person shall have the right or authority to issue an interpretation of an American National Standard in the name of the American National Standards Institute. Requests for interpretations shall be addressed to the secretariat or sponsor whose name appears on the title page of this standard.

CAUTION NOTICE: This American National Standard may be revised or withdrawn at any time. The procedures of the American National Standards Institute require that action be taken to reaffirm, revise, or withdraw this standard no later than five years from the date of approval. Purchasers of American National Standards may receive current information on all standards by calling or writing the American National Standards Institute.

Published by

National Electrical Manufacturers Association
1300 N. 17th Street, Rosslyn, Virginia 22209

Copyright © 2000 National Electrical Manufacturers Association
All rights reserved.

No part of this publication may be reproduced in any form, in an electronic retrieval system or otherwise, without prior written permission of the publisher.

Printed in the United States of America

Copyright National Electrical Manufacturers Association
Provided by IHS under license with NEMA
No reproduction or networking permitted without license from IHS

Not for Resale

This supplement to ANSI C37.58-1990 *Indoor AC Medium-Voltage Switches for Use in Metal-Enclosed Switchgear—Conformance Test Procedures* adds requirements and criteria for Production Tests.

When the referenced standards are superseded by a revision approved by the American National Standards Institute, Inc, the revision shall apply. In the case of IEEE Std 4, the 1978 edition shall apply.

7 Production tests

Unless otherwise specified, all production tests shall be made by the manufacturer at the factory on the complete MEI switchgear, ANSI/IEEE C37.20.3-1987 (R1993), *Metal Enclosed Interrupter Switchgear*, or its component parts, ANSI/IEEE C37.20.4-1997, *Indoor AC Medium-Voltage Switches for Use in Metal-Enclosed Switchgear*, for the purpose of checking the correctness of manufacturing operations and materials.

7.1 Power frequency withstand voltage tests

7.1.1 Purpose of tests

When these tests are applied to a new switch, they demonstrate the power frequency withstand voltage rating assigned to the MEI switchgear in accordance with ANSI/IEEE C37.20.4-1997, *Trial Use Guide for Indoor AC Medium-Voltage Switches for Use in Metal-Enclosed Switchgear*, table 1 and ANSI C37.22-1997, *Preferred Ratings and Related Required Capabilities for Indoor AC Medium-Voltage Switches Used in Metal-Enclosed Switchgear*, table 1.

7.1.2 Description of tests

a. Power frequency withstand tests shall be made in accordance with ANSI/IEEE Std 4-1978 unless otherwise specified.

b. The voltage to be applied for one minute shall be the rated power frequency withstand voltage.

c. The frequency of the test voltage shall be the rated frequency of the interrupter switch plus/minus 20 percent.

d. The voltage shall be an alternating single-phase voltage.

e. In making the test the initial voltage applied shall be permitted to be not more than 50 percent of the appropriate test level. The voltage shall be raised uniformly at a rate not greater than 750 volts per second to the test level. The voltage shall be held at the test level for not less than one minute. The voltage shall be reduced uniformly to 50 percent of test level or less before it is switched off.

f. The test shall be made at the atmospheric temperature, pressure and humidity prevailing at the test site. Suitable correction factors shall be permitted to be applied to the actual measured values of power frequency withstand voltage to convert them to the standard atmospheric conditions in accordance with Clause 1.3.5 of ANSI/IEEE Std 4-1978. Humidity correction factors shall be based on curves for rod gaps as stated in ANSI/IEEE Std 4-1978, table 1.3.

7.2 Mechanical operation test

Mechanical operation tests shall be performed to assure the proper functioning of the switch. Ten (open-close) operations of the switch shall be performed.

Copyright National Electrical Manufacturers Association
Provided by IHS under license with NEMA
No reproduction or networking permitted without license from IHS
Not for Resale

7.3 Terminal-to-terminal resistance test

Switches whose main contacts cannot be checked visually, shall be checked for resistance and must not exceed the maximum value established by the manufacturer.

Copyright National Electrical Manufacturers Association
Provided by IHS under license with NEMA
No reproduction or networking permitted without license from IHS
Not for Resale

STD.NEMA C37.58-ENGL 1990 ■ 6470247 0524022 T57 ■

AMERICAN NATIONAL STANDARD

American National Standard

ANSI C37.58-1990 (R1996)

American National Standard

Conformance Test Procedures for Indoor AC Medium Voltage Switches for Use in Metal Enclosed Switchgear

NATIONAL ELECTRICAL MANUFACTURERS ASSOCIATION
1300 NORTH 17TH STREET, SUITE 1847, ROSSLYN, VA 22209
(703) 841-3200 FAX: (703) 841-3300

Copyright National Electrical Manufacturers Association
Provided by IHS under license with NEMA
No reproduction or networking permitted without license from IHS
Not for Resale

STD.NEMA C37.58-ENGL 1990 ■ 6470247 0524023 993 ■

ANSI®
C37.58-1990

American National Standard
for Switchgear –

Indoor AC Medium-Voltage Switches for Use in Metal-Enclosed Switchgear – Conformance Test Procedures

Secretariat

National Electrical Manufacturers Association

Approved June 12, 1990

American National Standards Institute, Inc

Copyright National Electrical Manufacturers Association
Provided by IHS under license with NEMA
No reproduction or networking permitted without license from IHS

Not for Resale

American National Standard

Approval of an American National Standard requires verification by ANSI that the requirements for due process, consensus, and other criteria for approval have been met by the standards developer.

Consensus is established when, in the judgment of the ANSI Board of Standards Review, substantial agreement has been reached by directly and materially affected interests. Substantial agreement means much more than a simple majority, but not necessarily unanimity. Consensus requires that all views and objections be considered, and that a concerted effort be made toward their resolution.

The use of American National Standards is completely voluntary; their existence does not in any respect preclude anyone, whether he has approved the standards or not, from manufacturing, marketing, purchasing, or using products, processes, or procedures not conforming to the standards.

The American National Standards Institute does not develop standards and will in no circumstances give an interpretation of any American National Standard. Moreover, no person shall have the right or authority to issue an interpretation of an American National Standard in the name of the American National Standards Institute. Requests for interpretations shall be addressed to the secretariat or sponsor whose name appears on the title page of this standard.

CAUTION NOTICE: This American National Standard may be revised or withdrawn at any time. The procedures of the American National Standards Institute require that action be taken to reaffirm, revise, or withdraw this standard no later than five years from the date of approval. Purchasers of American National Standards may receive current information on all standards by calling or writing the American National Standards Institute.

Published by

National Electrical Manufacturers Association
1300 N. 17th Street, Rosslyn, Virginia 22209

Copyright © 2000 National Electrical Manufacturers Association
All rights reserved.

No part of this publication may be reproduced in any form, in an electronic retrieval system or otherwise, without prior written permission of the publisher.

Printed in the United States of America

Copyright National Electrical Manufacturers Association
Provided by IHS under license with NEMA
No reproduction or networking permitted without license from IHS

Not for Resale

Foreword

(This Foreword is not part of American National Standard C37.58-1990.)

This standard has been developed to describe selected tests and procedures to demonstrate conformance in accordance with Section 5 of IEEE Standard for Indoor AC Medium-Voltage Switches for Use in Metal-Enclosed Switchgear, IEEE C37.20.4.* To facilitate its use and to permit timely revisions based on experience, a separate document has been provided.

This standard is one of several in a series of test procedures for conformance testing of switchgear products. Although this standard is written for general guidance, performance criteria are established so that this standard can be adopted as the basis for certification of indoor ac medium-voltage switches for use in metal-enclosed switchgear for nonutility installations subject to regulation by public authorities and similar agencies concerned with laws, ordinances, regulations, administrative orders and similar instruments.

This standard was prepared by a Working Group sponsored by the Power Switchgear Assemblies Technical Committee of the Switchgear Section of the National Electrical Manufacturers Association (NEMA SG 5). The document utilizes some of the basic work done by a Working Group of the disbanded High-Voltage Apparatus Coordinating Committee. During the course of its preparation, coordination has been maintained with the Power Switching Equipment Technical Committee of the Switchgear Section of the National Electrical Manufacturers Association (NEMA SG 6) and reports of progress have been made to the IEEE Power Equipment Society Switchgear Committee.

Suggestions for improvement of this standard will be welcome. They should be sent to the National Electrical Manufacturers Association, 2101 L Street, NW, Washington, DC 20037.

This standard was processed and approved for submittal to ANSI by the Accredited Standards Committee on Power Switchgear, C37. Committee approval of the standard does not necessarily imply that all members voted for its approval. At the time it approved this standard, the C37 Committee had the following members:

T.C. Burtnett, Chairman
A.K. McCabe, Executive Vice-Chairman, High-Voltage Standards
S.H. Telander, Executive Vice-Chairman, Low-Voltage Standards
D.L. Swindler, Executive Vice-Chairman, IEC Activities
C.H. White, Secretary
M.B. Williams, Program Administrator

Organization Represented	*Name of Representative*
Association of Iron and Steel Engineers	J.M. Tillman
Electric Light and Power Group	R.L. Capra (Chairman)
	K.D. Hendrix
	M.J. Eckekamp
	J.H. Provanzana
	D.T. Weston
	G.R. Brandenberger (Alt)
	T.E. Bruck (Alt)
	M.C. Mingoia (Alt)
Institute of Electrical and Electronics Engineers	H.W. Mikulecky (Chairman)
	W.F. Hoenigmann
	D.M. Larson
	E.W. Schmunk
	C.A. Schwalbe
	S.C. Atkinson (Alt)
	D.G. Kumbera (Alt)
National Electrical Manufacturers Association	R.A. McMaster (Chairman)
	T.C. Burtnett
	R.H. Miller
	R.O.D. Whitt
	H.L. Miller (Alt)

* At the time of publication of this standard, IEEE C37.20.4 was under development. Contact the secretariat for more recent information.

Copyright National Electrical Manufacturers Association
Provided by IHS under license with NEMA
No reproduction or networking permitted without license from IHS
Not for Resale

Organization Represented	*Name of Representative*
Tennessee Valley Authority	R.B. Rotton
Testing Laboratory Group	L. Frier W.T. O'Grady
U.S. Department of Agriculture — Rural Electrification Administration	H.L. Bowles
U.S. Department of the Army — Office of the Chief of Engineers	W. M. Jones
U.S. Department of the Interior — Bureau of Reclamation	J.W. Reif
U.S. Department of the Navy — Naval Construction Battalion Center	R.L. Clark
Western Area Power Administration	G.D. Birney

The HVACC/NEMA Working Group, which accomplished the original, basic work for the document, had the following personnel at that time:

D.L. Swindler, Chairman
C.H. White, Secretary

J.H. Boerger
K. Hanke
A.J.G. Kalavaitis
S.H. Telander
L.E. Williams

The Power Switchgear Assemblies Technical Committee SG 5, which prepared and approved this standard, had the following personnel:

S.H. Telander, Chairman
C.H. White, Secretary
M.B. Williams, Program Administrator
W. Laubach, Working Group Chairman

P. Clickner
H. Miller
S. Roberts
G. Sakats
D. Swindler
C. Welter

Copyright National Electrical Manufacturers Association
Provided by IHS under license with NEMA
No reproduction or networking permitted without license from IHS
Not for Resale

Contents

SECTION PAGE

1. Scope 7

2. Referenced and Related Standards 7
   - 2.1 Referenced American National Standards 7
   - 2.2 Other Referenced Standard 7
   - 2.3 Related American National Standards 7

3. General Test Conditions 8

4. Conformance Test Requirements 8
   - 4.1 General 8
   - 4.2 Test Requirements 8
   - 4.3 Test Arrangement 8
   - 4.4 Commonalities of Design and Test 8
   - 4.5 Impulse Withstand Test 8
   - 4.6 Continuous Current Test 10
   - 4.7 Short-Circuit Tests 11
   - 4.8 Mechanical Endurance Test 13
   - 4.9 Load-Current Interrupting Test 14

5. Treatment of Failures 14

6. Product Retest Requirements 14

Tables

- Table 1 Representative Test Arrangements 9
- Table 2 Copper Conductor Size for Use In Continuous Current Tests 10

Figures

- Figure 1 Momentary, Short-Time, and Fault-Closing Current Test Circuits (for Unfused Switches) 11
- Figure 2 Fault-Closing Test Circuit (for Fused Switches) 13
- Figure 3 Load-Interrupting Test Circuit 15

Copyright National Electrical Manufacturers Association
Provided by IHS under license with NEMA
No reproduction or networking permitted without license from IHS
Not for Resale

American National Standard
for Switchgear –

Indoor AC Medium-Voltage Switches for Use in Metal-Enclosed Switchgear – Conformance Test Procedures

1. Scope

This standard applies to the conformance test procedure for ac medium-voltage switches rated above 1000 volts as designed, manufactured, and tested in accordance with IEEE Standard for Indoor AC Medium-Voltage Switches for Use in Metal-Enclosed Switchgear, IEEE C37.20.4.[1] It is intended for use in metal-clad switchgear, as described in American National Standard for Metal-Clad and Station-Type Cubicle Switchgear, ANSI/IEEE C37.20.2-1987, and metal-enclosed switchgear, as described in American National Standard Metal-Enclosed Interrupter Switchgear, ANSI/IEEE C37.20.3-1987.

Conformance testing need not be performed but may be utilized to demonstrate that the switches conform with the ratings assigned, as agreeable to those concerned, usually some time after original design testing, to satisfy a specific need.

This standard does not apply to installations under the exclusive control of electric utilities for the generation, control, transformation, transmission, and distribution of electric energy located in buildings used exclusively by utilities for such purposes or located outdoors on property owned or leased by the utility or on public highways, streets, roads, and the like, or outdoors by established rights on private property.

NOTE: Within this standard, the word "switches" shall be considered to mean "enclosed ac medium-voltage switches" as defined in IEEE C37.20.4.[1]

2. Referenced and Related Standards

2.1 Referenced American National Standards. This standard is intended to be used in conjunction with the following American National Standards. When these standards are superseded by a revision approved by the American National Standards Institute, Inc, the revision shall apply.

ANSI C37.33-1987, Rated Control Voltages and Their Ranges for High-Voltage Air Switches

ANSI C37.55-1989, Conformance Test Procedure for Metal-Clad Switchgear

ANSI C37.57-1990, Conformance Testing of Metal-Enclosed Interrupter Switchgear Assemblies

ANSI/IEEE C37.09-1979 (R1989), Test Procedure for AC High-Voltage Circuit Breakers Rated on a Symmetrical Current Basis

ANSI/IEEE 4-1978, Techniques for High-Voltage Testing

2.2 Other Referenced Standard. This standard is also intended for use in conjunction with IEEE Standard for Indoor AC Medium-Voltage Switches for Use in Metal-Enclosed Switchgear, IEEE C37.20.4.[1]

2.3 Related American National Standards. The following American National Standards are intended solely for explanation or clarification and are not essential to completing the requirements of this standard.

ANSI/IEEE C37.20.2-1987, Metal-Clad and Station-Type Cubicle Switchgear

ANSI/IEEE C37.20.3-1987, Metal-Enclosed Interrupter Switchgear

ANSI/IEEE C37.100-1981, Definitions for Power Switchgear

ANSI/IEEE 100-1984, Dictionary of Electrical and Electronic Terms

[1]At the time of publication of this standard, IEEE C37.20.4 was under development. Contact the secretariat for more recent information.

Copyright National Electrical Manufacturers Association
Provided by IHS under license with NEMA
No reproduction or networking permitted without license from IHS
Not for Resale

3. General Test Conditions

Tests shall be conducted under conditions prevailing at the test site which shall conform to usual service conditions in accordance with 2.1 of IEEE C37.20.4[1] except that continuous current tests shall be conducted within the ambient temperature range of 10°C (50°F) to 40°C (104°F).

4. Conformance Test Requirements

4.1 General. Tests are made on representative test arrangements of switches as described in 4.3 in order to demonstrate the capability of the switch design to meet its assigned ratings and to operate under normal service conditions as outlined in Section 3 of IEEE C37.20.4.[1]

Each representative switch to be tested shall have been previously tested in accordance with production tests contained in 5.3 of IEEE C37.20.4.[1]

4.2 Test Requirements. The switch, including its fuses where applicable, together with its functional components and accessory devices with which it is equipped, shall successfully complete all of the following applicable tests.

The tests shall be made as shown. However, more than one sample of the switch may be required to complete all of the tests and to utilize the test facilities more efficiently.

(1) Impulse withstand test (see 4.5)
(2) Continuous current test (if rated) (see 4.6)
(3) Momentary current test (see 4.7.2)
(4) Short-time current test (see 4.7.3)
(5) Fault-closing test (if rated) (see 4.7.4)
(6) Mechanical endurance test (see 4.8)
(7) Load-current interrupting test (if rated) (see 4.9)

4.3 Test Arrangement. Each switch shall be tested in an enclosure as indicated in the specific test section. The enclosure may be a production-made, metal-enclosed switchgear vertical section or specific metal test enclosure.

4.3.1 Switchgear Vertical Section. This section shall be the specifically designed production housing including all the design features such as mountings, doors, insulating barriers, ventilating means, and connections.

4.3.2 Test Enclosure. The test enclosure (compartment) shall effectively duplicate or simulate all of the elements present in the switchgear vertical section that have an influence on the performance of the switch (see 5.1.1 of IEEE C37.20.4[1]).

For a drawout unit, the enclosure shall be equipped with primary and grounding disconnecting means as well as means for positively retaining the switch in the connected position.

The location of all elements of the test enclosure shall be located at no greater distances from the switch than equivalent elements are located in the production switchgear housing.

4.3.3 Grounding of Test Enclosures or Switchgear Vertical Section. The test enclosures or the switchgear vertical section shall be grounded for the required tests unless specific exception is made. For the impulse withstand test, not less than #14 AWG copper wire shall be used, and for all short-circuit tests, not less than #4/0 AWG copper cable shall be used.

4.4 Commonalities of Design and Test. Due to similarities that may exist between various switches, it is recognized that certain types of tests conducted on a particular switch shall be properly extended to qualify other switches of similar type, style, or rating within the intent of this standard. In each case, consideration must be given to the nature of the specific test, its influence on the switch performance, and elements of the switch that will be affected.

The typical examples noted in the following list are intended for information and guidance in applying this section, and shall not limit its applicability:

(1) Short-circuit current tests conducted on a switch having a particular continuous current rating (i.e., 600 ampere) may be extended to qualify other switches with higher continuous current rating, the higher continuous current switches having inherently heavier and more rigid constructions.

(2) Continuous current tests conducted on one voltage class switch may be extended to qualify another voltage class, if the switch is of equivalent design and the enclosure constraints are not more severe.

(3) Mechanical endurance tests conducted on a switch with a high-energy mechanism may be extended to qualify the mechanical endurance capability of switches which, because of their particular ratings, have lower energy mechanisms.

Listed in Table 1 are the voltage and continuous current ratings and the associated interrupter switch fault-closing and short-circuit current capabilities. Representative test arrangements are to be selected from these ratings and capabilities.

4.5 Impulse Withstand Test

4.5.1 General. Impulse withstand tests shall be conducted on a new and clean, completely assembled switch mounted in the test enclosure or the switchgear housing specifically designed to accommodate it, to

Copyright National Electrical Manufacturers Association
Provided by IHS under license with NEMA
No reproduction or networking permitted without license from IHS
Not for Resale

Table 1
Representative Test Arrangements

Test Arrangement Number	Rated Maximum Voltage (kV)	Rated Continuous Current (Amps)	Short-Time Current Capability (Rms Sym) kA	Fault-Closing Capability (Rms Asv) kA
1–3	4.76	600	12.5, 25, and 38	20, 40, and 61
4–7	4.76	1200	12.5, 25, 38, and 50	20, 40, 61, and 80
8–10	8.25	600	12.5, 25, and 38	20, 40, and 61
11–14	8.25	1200	12.5, 25, 38, and 50	20, 40, 61, and 80
15–17	15.0	600	12.5, 25, and 38	20, 40, and 61
18–21	15.0	1200	12.5, 25, 38, and 50	20, 40, 61, and 80
22-24	25.8	600	12.5 and 25	20 and 40
25–28	38.0	600	12.5 and 25	20 and 40

demonstrate conformance with the full wave impulse withstand voltage rating assigned to the switch, in accordance with Table 1 of IEEE C37.20.4.[1]

4.5.2 Description of Test. The impulse withstand test shall meet the requirements specified in 4.5.2.1 through 4.5.2.3.

4.5.2.1 The test shall be conducted in accordance with ANSI/IEEE 4-1978, unless otherwise specified.

4.5.2.2 The standard 1.2/50 impulse voltage wave with crest value equal to the rated impulse withstand voltage of the MEI switchgear being tested shall be applied in accordance with subsection 5.2.1.1 of ANSI/IEEE 4-1978. In these tests, three positive and three negative impulse voltages shall be applied to each point without causing damage or flashover, except, where prior testing shows that tests of one polarity are more severe, tests using the opposite polarity shall be omitted.

4.5.2.3 Tests shall be made under dry conditions at the atmospheric temperature, pressure and humidity prevailing in the test laboratory. Suitable correction factors shall be applied to the actual measured values of impulse voltage to convert them to standard atmospheric conditions in accordance with 1.3.4 of ANSI/IEEE 4-1978. Humidity correction factors shall be based on curves derived for rod gaps in accordance with Figure 14 of ANSI/IEEE 4-1978.

4.5.3 Procedures. Impulse withstand tests shall be made as follows (see Note 1):

(1) With the switch closed and in the connected position (if drawout design), apply the test voltage to incoming terminals of each pole individually with the enclosure and other poles grounded.

(2) With the switch open and in the connected position (if drawout design), apply the test voltage to incoming terminals of all poles with enclosure and all outgoing terminals grounded.

(3) With the switch open and in the connected position (if drawout design), apply the test voltage to outgoing terminals of all poles with enclosure and all incoming terminals grounded.

4.5.4 Number of Tests. If a disruptive discharge does not occur during the application of three consecutive impulses for each of the conditions shown in 4.5.3, the switch shall be considered as having passed the test. If two or three of the applied impulse waves cause disruptive discharge, the switch shall be considered as having failed the test. If only one of the three applied impulses causes disruptive discharge, three additional impulses shall be applied. If disruptive discharge does not occur on any of these three additional impulses, the switch shall be considered as having passed the test.

4.5.5 Performance. For a switch, or fused switch, to be judged to have demonstrated the assigned rated impulse withstand test voltage, it shall have passed all of the required tests in accordance with 4.5.

NOTES:

(1) When fused switches are tested, the particular switch and fuse combination shall use the physically largest fuse in the voltage class to qualify other combinations. Fused switches shall be tested to the procedure shown in 4.5.3.

(2) Some insulating materials retain a charge after an impulse test, and for these cases, care should be taken when reversing the polarity. To allow the discharge of insulating materials, the use of appropriate methods, such as the application of impulses at lower voltage before the tests, is recommended.

Copyright National Electrical Manufacturers Association
Provided by IHS under license with NEMA
No reproduction or networking permitted without license from IHS
Not for Resale

Table 2
Copper Conductor Size for Use in Continuous Current Tests

Switch Rating (Amperes)	Quantity	Copper Bars Per Terminal Size, Inch (mm)	Alternate Cable Size Circular Mil
200	One	1/8 × 1 — (3.18 × 25.4)	One #2/0 maximum
600	One	1/4 × 2 — (6.35 × 50.8)	Two — 350 MCM
1200	One	1/4 × 4 — (6.35 × 101.6)	Four — 500 MCM
2000	Two	3/8 × 4 — (9.53 × 101.6)	—
3000	Three	3/8 × 5 — (9.53 × 127.0)	—

NOTE: When multiple bars are used, they are to be spaced 3/8 inch (9.53 mm) apart. Configurations shall be vertical unless the design of the test arrangement requires them to be horizontal. The determination of the configuration shall be at the option of the manufacturer.

4.6 Continuous Current Test. This test shall demonstrate the ability of a switch, or fused switch, to carry rated continuous current at rated frequency without exceeding the allowable temperature rise.

4.6.1 Test Arrangement

4.6.1.1 Drawout Version. The switch (or fused switch) to be tested shall be in the normal connected position within a switchgear housing, which has been designed to accommodate it. Its contacts shall be in the normally closed position. The test shall be made in conjunction with the switchgear assembly continuous current test as described in 3.7 of ANSI C37.55-1989 or 3.7 of ANSI C37.57-1990.

4.6.1.2 Stationary Version. The switch (or fused switch) to be tested shall be located in the test enclosure or switchgear housing, which has been designed to accommodate it. Test connections shall be brought to the switch terminals (or load side of the fuse terminal) in accordance with Table 2.

4.6.2 Continuous Current Test. The switch or fused switch shall be tested at any convenient voltage using a three-phase source of power. The average of the three-phase currents is to be maintained at no less than the rated continuous current of the switch. A single-phase source of power (all phases in series), with flow of current reversed in adjacent phases, may be used at the option of the manufacturer.

To test the maximum assigned continuous current rating of the switch when used in a fused switch combination assembly, it may be necessary to replace or bypass the fuse assembly with a conductor of such a size as specified in Table 2. However, when it is required that an actual fuse be used in this combination, the test current shall not exceed the maximum continuous current rating of the fuse design. (See Note 2 in Table 2 of IEEE C37.20.4.[1])

4.6.3 Test Area Conditions. Temperature tests shall be conducted indoors in a test room that is reasonably free from drafts.

4.6.4 Ambient Air Temperature Limits. Tests may be made at any ambient air temperature between 10°C (50°F) and 40°C (104°F).

4.6.5 Measurement of Ambient Air Temperature. Indoor ambient air temperatures shall be determined by taking the average of the readings of three temperature-measuring devices such as thermometers or thermocouples, placed as follows:

(1) One level with the top of the structure;

(2) One 12 inches (305 mm) above the bottom of the structure;

(3) One midway between the two above positions.

All temperature-measuring devices shall be placed 12 inches (305 mm) from the structure, not in front of ventilators, and in locations unaffected by drafts caused by the structure or appreciable radiation from the equipment. When the ambient air temperature is subject to variations that might result in errors in measuring the temperature rise, the temperature-measuring devices should be immersed in a suitable liquid such as oil in a suitable container or reliably attached to a suitable mass of metal.

NOTE: A convenient form for such a container consists of a metal cylinder with a hole drilled partly through it. This is filled with liquid and the temperature-measuring device is placed therein.

A glass bottle may also be used as a container. The size of the container should be at least 1 inch (25.4 mm) in diameter and 2 inches (50.8 mm) high.

4.6.6 Measurement of Equipment Temperature. Thermocouples, when used for measuring the temperature of insulation, shall be located on the current-carrying member or other metal part at a point as close as practical to the accessible junction of the insulation and the current-carrying member or other metal part. Thermocouples used for measuring the temperature of the interrupter switch separable primary contacts shall be located approximately 0.5 inch (13 mm) from the contacts on the current-carrying member. For cable

Copyright National Electrical Manufacturers Association
Provided by IHS under license with NEMA
No reproduction or networking permitted without license from IHS
Not for Resale

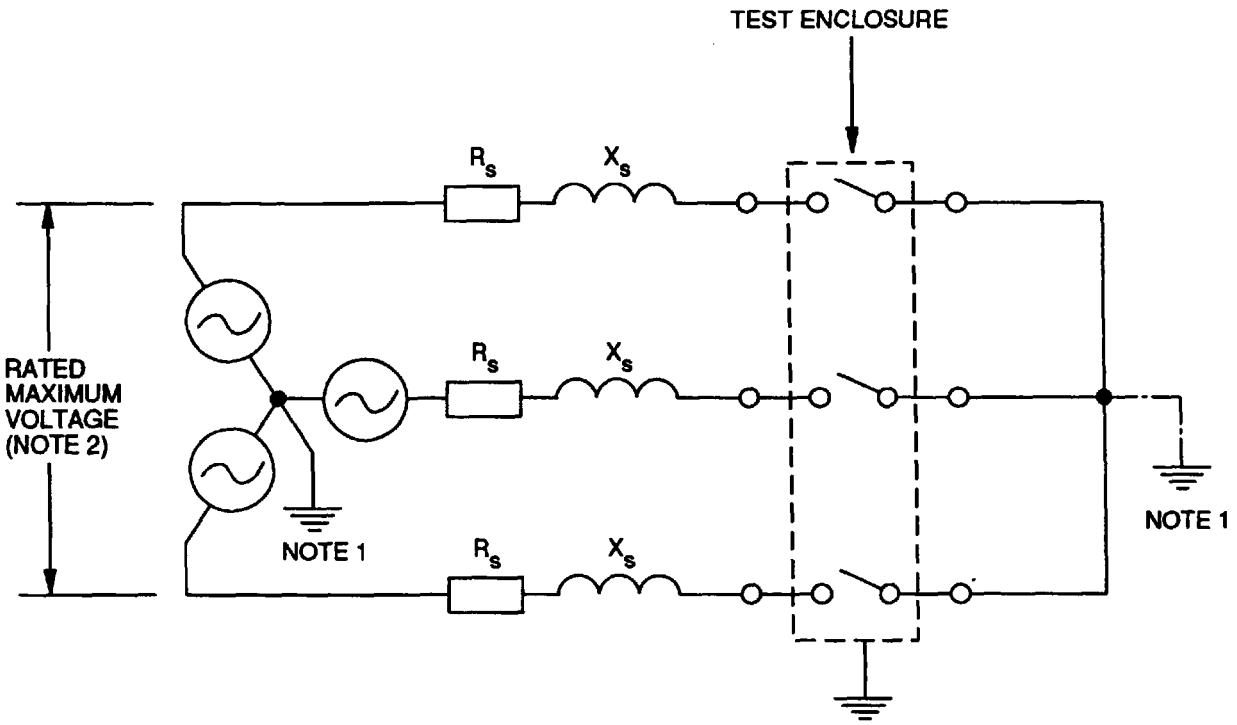

NOTES:
(1) Either the neutral of the load or the source is to be grounded, but not both.
(2) The voltage may be any convenient voltage for momentary and short-time tests.

Figure 1
Momentary, Short-Time, and Fault-Closing Current Test Circuits (for Unfused Switches)

terminations, the thermocouples shall be located at the junction of the conductor and its insulation.

Thermocouples shall be held in intimate contact with the conductor surface by such methods as welding, drilling and peening, or cementing.

4.6.7 Duration of Tests. The continuous current test shall be made for such a period of time that the temperature rise of any monitored point in the assembly has not increased by more than 1.0°C during each of two successive 30-minute intervals, as indicated by three successive readings. If the temperature rise at the end of the second interval is equal to the established limits and if the temperature rise has increased since the previous reading, the test shall be continued until the temperature rise is constant.

4.6.8 Frequency of Test Voltage. The frequency of the test voltage shall not be less than the rated frequency of the apparatus tested. The test shall be made with alternating-current voltage having a crest value equal to 1.41 times the rms (root-mean-square) test voltage.

4.6.9 Copper Conductors for Use in Continuous Current Tests. The size of bars or cables to be used is listed in Table 2.

4.6.10 Performance. The switch (fused switch) assembly shall be considered as having passed this test if the allowable temperature rise and total temperature limits specified in Table 2 of IEEE C37.20.4[1] are not exceeded.

4.7 Short-Circuit Tests. Momentary, short-time, and fault-closing current tests shall be made to demonstrate the ability of the switch to make and carry its short-circuit current and withstand the mechanical stresses produced. The tests shall be performed to verify the several ratings. The momentary test is not required on an unfused switch that has previously demonstrated a conformance fault-closing rating equal to the momentary rating. For three-phase devices, three-phase tests shall be conducted. See Figure 1.

4.7.1 Test Arrangements. The switch (or fused switch) shall be mounted in a test enclosure or a

Copyright National Electrical Manufacturers Association
Provided by IHS under license with NEMA
No reproduction or networking permitted without license from IHS
Not for Resale

switchgear housing that has been designed to accommodate it. The switch shall be in the normally closed position. The fuse assembly on a fused switch shall be replaced or bypassed with a copper bus bar of such a size as specified in Table 2. Test conductors shall be adequately braced to prevent undue forces on the switch or enclosure, but shall not add intentional bracing to the switch. The switch frame shall be grounded with a minimum of 4/0 copper conductor.

4.7.2 Momentary Current Test. The rated rms (root-mean-square) asymmetrical momentary current is given in Table 5 of IEEE C37.20.4,[1] and shall conform to the following:

4.7.2.1 The rms total current (in one phase) shall include the direct current component during the maximum cycle as determined from the envelope of the current wave. The symmetrical test current can be of any value provided the power factor is maintained in accordance with 4.7.2.3.

4.7.2.2 The duration of current flow shall be for no less than 10 cycles on a 60-Hz basis.

4.7.2.3 The power factor of the test current shall be 15 percent lagging or less (X/R ratio of 6.6 or greater) with X and R in series connection.

4.7.2.4 The test shall be performed at any convenient voltage.

4.7.3 Short-Time Current Test. The rated short-time rms symmetrical current is equal to the rated momentary current divided by 1.6 and is given in Table 6 of IEEE C37.20.4.[1]

4.7.3.1 Test Current. The current shall be monitored throughout the duration of the test and the demonstrated level of current shall be determined by an integration of the current envelope over the required time, using the method described in ANSI/IEEE C37.09-1979.

NOTE: If the test circuit meets the requirements of 4.7.2.1, this test may be combined with the momentary current test.

4.7.3.2 Determination of Test Current Values. Test currents shall be measured in accordance with ANSI/IEEE C37.09-1979. Test voltage and circuit power factor shall be in accordance with 4.7.2.2, 4.7.2.3, and 4.7.2.4.

4.7.3.3 Performance. Momentary and short-time current ratings shall be considered met if there is no visible damage to the switch after the test and it is still functional. However, the tests may result in some visual evidence of the switch having passed current, such as contact markings, and discoloration.

4.7.4 Fault-Closing Test (if rated). A fault-closing test shall be made to demonstrate the ability of the switch to close at maximum rated voltage into a faulted circuit. For three-phase devices, three-phase tests shall be conducted. The rated fault closing current is given in Table 7 of IEEE C37.20.4.[1]

4.7.4.1 Test Arrangement. The switch (or fused switch) shall be mounted in a test enclosure or a switch housing that has been designed to accommodate it.

Test conductors shall be adequately braced to prevent undue force on the switch or enclosure, but shall not add intentional bracing to the switch. Suitable means for remotely operating the switch to the closed position may be provided.

Test 1. Unfused switches shall be tested with all poles solidly faulted on one side.

Test 2. Fused switches shall be tested with all poles solidly faulted on the outgoing side. Designated fuses with maximum let-through current intended for use with the switch shall be used. See Figure 2.

NOTE: Only Test 2 is required for a switch that is designed and used only with integral-current-limiting fuses.

4.7.4.2 Test Voltage. The applied voltage is the open-circuit rms voltage of the test circuit immediately before fault closing, and its average value shall be equal as nearly as possible to the rated maximum voltage of the switch. It shall be applied to all poles of the switch or fused switch.

4.7.4.3 Fault Closing Current and Duration. The rated rms asymmetrical fault closing current shall be as shown in Table 7 of IEEE C37.20.4,[1] and is the available (prospective) rms asymmetrical current in one phase, including the direct current component during the maximum cycle, as determined from the envelope of the current wave. The duration of the test shall be as follows:

Test 1. When rating the switch alone, the current flow shall be not less than 10 cycles on a 60-Hz basis.

Test 2. The duration of voltage shall be not less than 10 cycles on a 60-Hz basis.

4.7.4.4 Determination of Test Current Values. Test-bolted fault currents shall be measured in accordance with ANSI/IEEE C37.09-1979. The circuit shall be calibrated with the switch short-circuited at the incoming terminals.

4.7.4.5 Performance. Fault-closing ratings shall be considered met if the switch closes without flashover-to-ground or phase-to-phase, and carries the current for the assigned duration. There shall be no damage caused that would endanger the safety of the operator or impair the integrity of the enclosure. The main current path of the switch shall not be open and should be capable of conducting rated current. The switch shall be capable of being operated to the open position in its intended manner. Finally, insulation integrity shall be checked by applying for 1 minute a

Copyright National Electrical Manufacturers Association
Provided by IHS under license with NEMA
No reproduction or networking permitted without license from IHS
Not for Resale

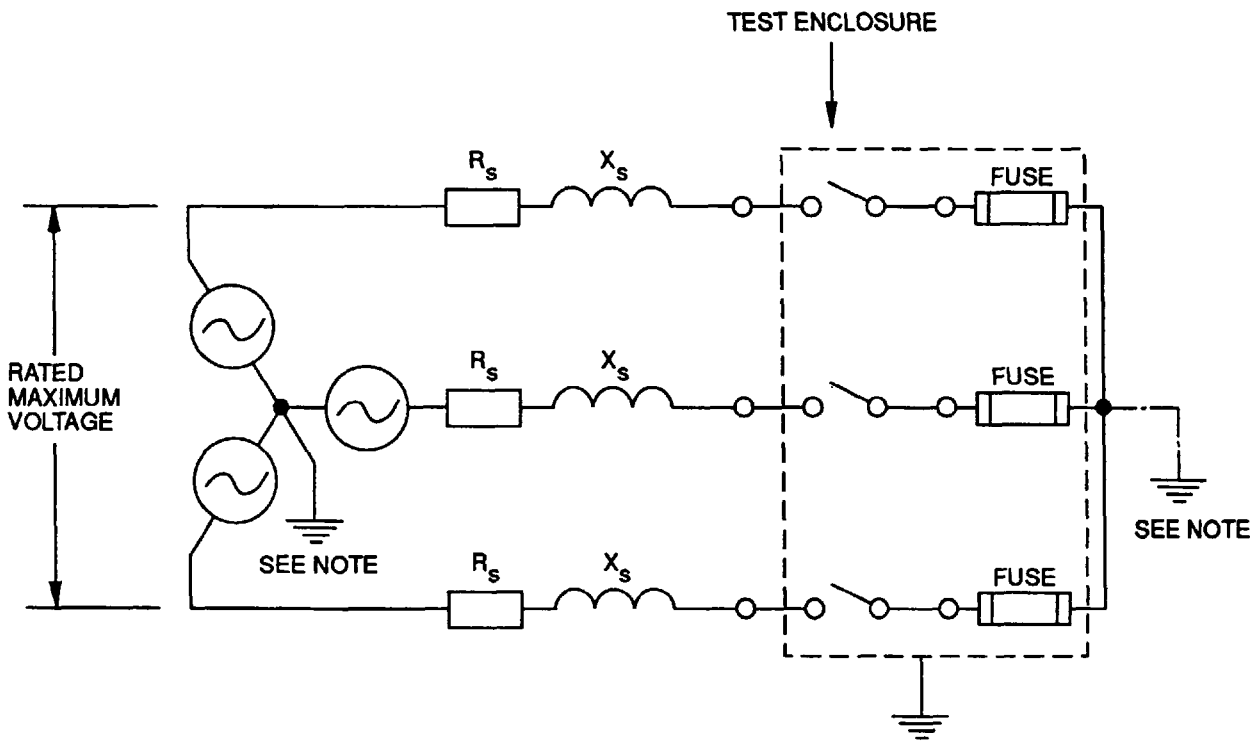

NOTE: Either the neutral of the load or the source is to be grounded, but not both.

Figure 2
Fault-Closing Test Circuit
(for Fused Switches)

low-frequency withstand voltage equal to 75% of the values specified in Table 1 of IEEE C37.20.4.[1]

4.8 Mechanical Endurance Test. A mechanical endurance test shall be made to demonstrate the no-load mechanical capability of the switch.

4.8.1 Test Arrangement. The switch shall be mounted in a test enclosure, or a switchgear housing that has been designed to accommodate it. If the switch assembly has an integrally-mounted operating mechanism, the enclosure is not necessary. The test may be performed without voltage or current applied to the switch terminals.

4.8.2 Power Operation. A power-operated switch test shall be conducted at a control voltage within the range specified in Table 1 of ANSI C37.33-1987. The frequency of operation shall be as specified by the manufacturer.

4.8.3 Manual Operation. A mechanical endurance test shall be performed on manually operated switches. However, if the switch is equipped with a stored energy mechanism, the only difference being the means of supplying that energy, this switch shall not be subjected to the mechanical endurance test, provided the power-operated test has been performed.

4.8.4 Mechanical Endurance Test Requirements. The test shall consist of close–open operations in accordance with Table 12 of IEEE C37.20.4.[1] During the test, no component shall be repaired or replaced and no maintenance shall be performed. Switches previously qualified in accordance with 5.2.4.5 of IEEE C37.20.4[1] during the previous 10 years shall only require 50% of the operations specified in Table 12.

4.8.5 Performance. The mechanical endurance test shall be considered passed if the switch is in essentially the same condition as before the test, and is capable of performing all its operational functions, and if components such as the main and interrupting contacts, insulating members, and main mechanical components and interlocks are still functional. However, these components may show physical wear. If the condition of the switch is questionable, a contact resistance test may be conducted. If the condition is still in question, then a continuous current test shall be conducted to demonstrate temperature stability.

Copyright National Electrical Manufacturers Association
Provided by IHS under license with NEMA
No reproduction or networking permitted without license from IHS
Not for Resale

4.9 Load-Current Interrupting Test (if rated). Interrupting tests shall demonstrate the ability of the switch to interrupt load currents specified in Table 3 of IEEE C37.20.4.[1]

4.9.1 Test Arrangement. The switch shall be in the normal connected position within its metal test enclosure or within switchgear housing that has been designed to accommodate it. The fuse holder assembly for fused switches shall be replaced or bypassed with a conductor of such a size as specified in Table 2. Suitable means for remotely operating the switch to the open position may be provided. This means can be electrical, pneumatic, or mechanical and shall operate the switch at its normal operating speed.

Tests shall be made on a standard opening or close–open cycle. The switch may be allowed to cool between the tests when required for proper performance.

4.9.2 Grounding. Test switches shall be connected in a circuit having the neutral point of the supply at the terminals of the equipment under test insulated, and the neutral point of the three-phase circuit grounded, or vice-versa. The enclosure shall be grounded with a minimum 4/0 copper conductor.

4.9.3 Test Voltage and Current. Three-phase interrupting tests shall be with a normal frequency recovery voltage equal to, but not less than the maximum design voltage rating of the switch. Alternate single-phase testing may be conducted. A single pole of a three-pole group-operated switch shall be tested with a normal frequency recovery voltage of not less than 87% of the maximum design voltage rating. Values of operations and current interrupted shall be those specified in Table 3 of IEEE C37.20.4.[1] Switches previously qualified in accordance with 3.2.6 of IEEE C37.20.4[1] during the previous 10 years shall require 20% of the operations specified in Table 3 of IEEE C37.20.4.[1]

The current interrupted, and recovery voltage shall be measured in accordance with ANSI/IEEE C37.09-1979.

4.9.4 Load-Interrupting Test Circuit. The load circuit shall be composed of resistance and reactance connected in parallel of such a magnitude to produce a power factor of the total circuit between 70% to 80% lagging. This load circuit shall be 80% to 90% of the total impedance, with the remainder being present in the station reactance source circuit. See Figure 3.

4.9.5 Performance. The interrupting tests shall be considered passed if the switch successfully interrupts the test current specified for the required number of duty cycles, without flashover between phases or from phase to ground. At the completion of the test, the switch shall be substantially in the same mechanical condition as at the beginning of the test. However, interrupting components may show erosion.

5. Treatment of Failures

When failures occur during testing, the failures shall be evaluated and corrected, and the equipment shall be retested. A design change made to the switch switchgear to correct a failure in a test shall be evaluated for its effect on preceding tests.

When analysis indicates that a particular corrective action would not have affected results obtained in previous tests, it shall be permitted to take the corrective action without repeating the previously completed tests.

When analysis indicates that a particular corrective action may have caused a failure in tests previously completed, only those tests that may have failed shall be repeated on the switch switchgear to which the corrective action has been applied. In deciding whether or not to repeat a previous test, it is important that the decision be based on the corrective action taken and not on the failure that actually occurred.

6. Product Retest Requirements

Retesting is not required if the design has not changed. A design change made to any switch shall be evaluated for its effect on rated performance. If it is determined that performance may be affected by the change, the relevant conformance tests shall be repeated. If the design has not changed for 10 years, the fault closing, mechanical endurance, and load-current interrupting tests shall be repeated for the reduced number of operations specified in 4.8.4 and 4.9.3.

Copyright National Electrical Manufacturers Association
Provided by IHS under license with NEMA
No reproduction or networking permitted without license from IHS
Not for Resale

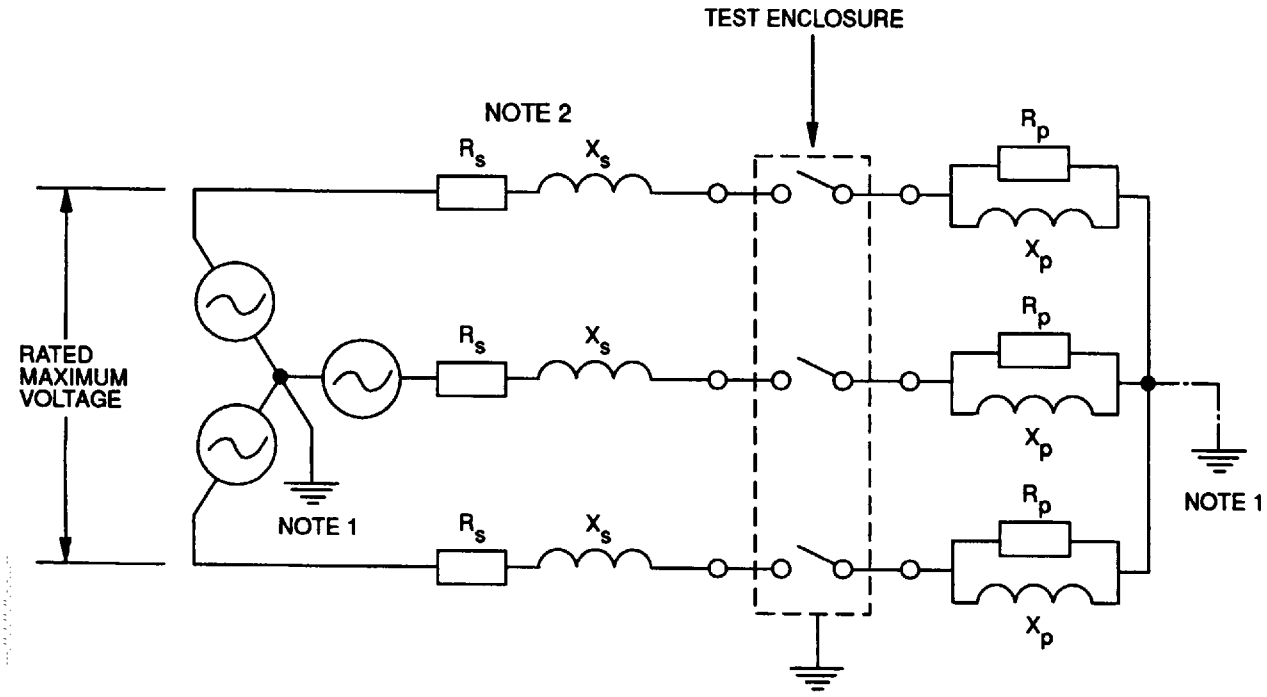

(a) Load-Interrupting Test Circuit

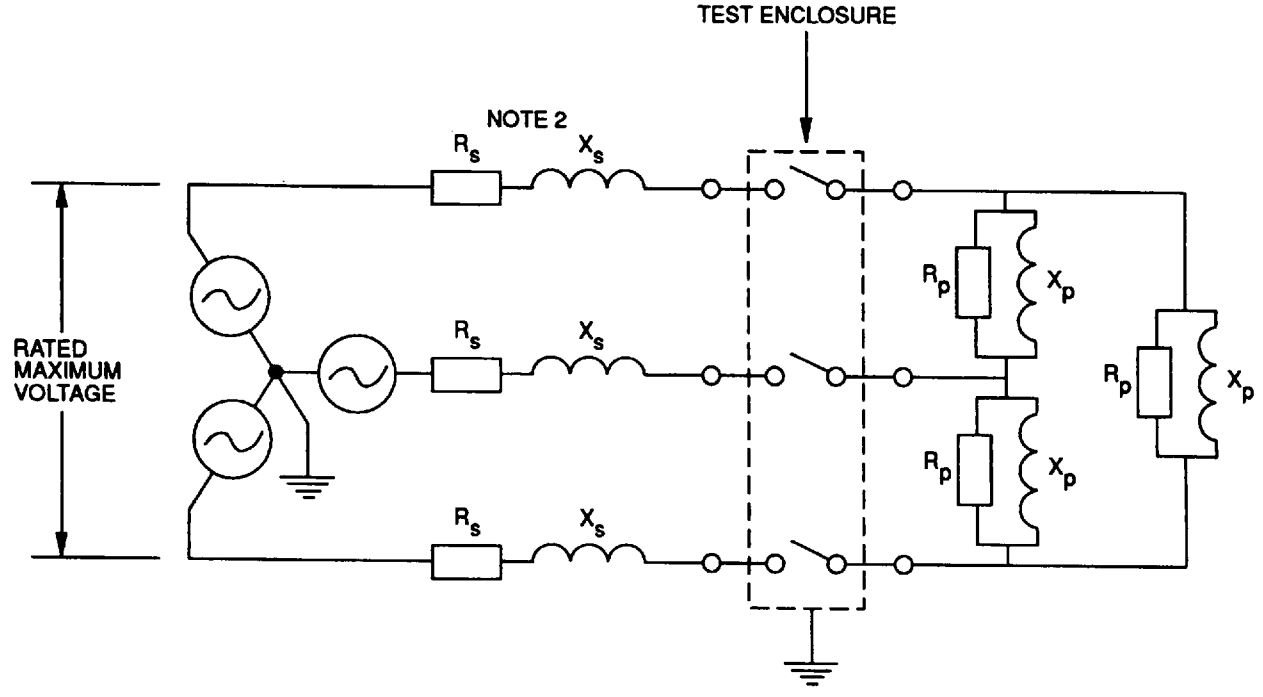

(b) Load-Interrupting Test Circuit
(Delta-Connected Load Alternative)

NOTES:

(1) Either the neutral of the load or the source is to be grounded, but not both.

(2) $R_s + X_s$ must be between 10% and 20% of total circuit impedance.

Figure 3
Load-Interrupting Test Circuit

Copyright National Electrical Manufacturers Association
Provided by IHS under license with NEMA
No reproduction or networking permitted without license from IHS
Not for Resale