STD.NEMA C37.57-ENGL 1990 6470247 0522342 703

AMERICAN NATIONAL STANDARD

American National Standard

ANSI C37.57-1990 (R1996)

American National Standard

Switchgear Metal Enclosed Interrupter Switchgear Assemblies— Conformance Testing

NATIONAL ELECTRICAL MANUFACTURERS ASSOCIATION
1300 NORTH 17TH STREET, SUITE 1847, ROSSLYN, VA 22209
(703) 841-3300 FAX: (703) 841-3300

Copyright National Electrical Manufacturers Association
Provided by IHS under license with NEMA
No reproduction or networking permitted without license from IHS
Not for Resale

ANSI®
C37.57-1990

American National Standard
for Switchgear –

Metal-Enclosed Interrupter Switchgear Assemblies– Conformance Testing

Co-Secretariat

Institute of Electrical and Electronics Engineers
National Electrical Manufacturers Association (Administrative)

Approved July 5, 1990

American National Standards Institute, Inc

Copyright National Electrical Manufacturers Association
Provided by IHS under license with NEMA
No reproduction or networking permitted without license from IHS

Not for Resale

American National Standard

Approval of an American National Standard requires verification by ANSI that the requirements for due process, consensus, and other criteria for approval have been met by the standards developer.

Consensus is established when, in the judgment of the ANSI Board of Standards Review, substantial agreement has been reached by directly and materially affected interests. Substantial agreement means much more than a simple majority, but not necessarily unanimity. Consensus requires that all views and objections be considered, and that a concerted effort be made toward their resolution.

The use of American National Standards is completely voluntary; their existence does not in any respect preclude anyone, whether he has approved the standards or not, from manufacturing, marketing, purchasing, or using products, processes, or procedures not conforming to the standards.

The American National Standards Institute does not develop standards and will in no circumstances give an interpretation of any American National Standard. Moreover, no person shall have the right or authority to issue an interpretation of an American National Standard in the name of the American National Standards Institute. Requests for interpretations shall be addressed to the secretariat or sponsor whose name appears on the title page of this standard.

CAUTION NOTICE: This American National Standard may be revised or withdrawn at any time. The procedures of the American National Standards Institute require that action be taken to reaffirm, revise, or withdraw this standard no later than five years from the date of approval. Purchasers of American National Standards may receive current information on all standards by calling or writing the American National Standards Institute.

Published by

National Electrical Manufacturers Association
1300 N. 17th Street, Rosslyn, Virginia 22209

Copyright © 2000 National Electrical Manufacturers Association
All rights reserved.

No part of this publication may be reproduced in any form, in an electronic retrieval system or otherwise, without prior written permission of the publisher.

Printed in the United States of America

Copyright National Electrical Manufacturers Association
Provided by IHS under license with NEMA
No reproduction or networking permitted without license from IHS

Not for Resale

Foreword

(This Foreword is not part of American National Standard C37.57-1990.)

This standard has been developed to describe selected tests and procedures to demonstrate conformance in accordance with Section 5, Tests, of American National Standard for Metal-Enclosed Interrupter Switchgear, ANSI/IEEE C37.20.3-1987. To facilitate its use and to permit timely revisions based on experience, a separate document has been provided.

This standard has been prepared by a Working Group sponsored by the Power Switchgear Assemblies Technical Committee of the Switchgear Section of the National Electrical Manufacturers Association (NEMA 8SGV). During the course of its preparation, coordination has been maintatined with the Power Switching Equipment Technical Committee of the Switchgear Section of the National Electrical Manufacturers Association (NEMA 8SGVI). Reports of progress have also been made at regular intervals to the High-Voltage Apparatus Coordinating Committee of the Electrical and Electronics Standards Management Board of the American National Standards Institute, and the Switchgear Committee of the Power Engineering Society of the Institute of Electrical and Electronics Engineers.

Through this joint effort over many years, the switchgear assemblies standards have been of extreme value to the industry and further suggestions for improvement gained in the use of this standard will be welcomed.

Suggestions for the improvement of this standard will be welcome. They should be sent to the National Electrical Manufacturers Association, 2101 L Street, NW, Washington, DC 20037.

This standard was processed and approved for submittal to ANSI by the Accredited Standards Committee on Power Switchgear, C37. Committee approval of the standard does not necessarily imply that all members voted for its approval. At the time it approved this standard, the C37 Committee had the following members:

T. C. Burtnett, Chairman
A. K. McCabe, Executive Vice-Chairman, High-Voltage Switchgear Standards
S. H. Telander, Executive Vice-Chairman, Low-Voltage Switchgear Standards
D. L. Swindler, Executive Vice-Chairman, IEC Activities
C. H. White, Secretary
M. B. Williams, Program Administrator

Organization Represented	*Name of Representative*
Association of Iron and Steel Engineers	J. M. Tillman
Electric Light and Power Group	R. L. Capra (Chairman)
	D. A. Ditzler
	K. D. Hendrix
	J. H. Provanzana
	T. D. Weston
	G. R. Brandenberger (Alt)
	T. E. Bruck (Alt)
	David E. Soffrin (Alt)
Institute of Electrical and Electronics Engineers	H. W. Mikulecky (Chairman)
	W. F. Hoenigmann
	D. M. Larson
	E. W. Schmunk
	C. A. Schwalbe
	S. C. Atkinson (Alt)
	D. G. Kumberg (Alt)
National Electrical Manufacturers Association	R. O. D. Whitt (Chairman)
	T. C. Burtnett
	R. A. McMaster
	R. H. Miller
	H. L Miller (Alt)
Tennessee Valley Authority	Robert C. St. Clair

Copyright National Electrical Manufacturers Association
Provided by IHS under license with NEMA
No reproduction or networking permitted without license from IHS
Not for Resale

Organization Represented	*Name of Representative*
Testing Laboratory Group	L. Frier
	W. T. O'Grady
	R. W. Seelbach (Alt)
U. S. Department of Agriculture	H. L. Bowles
U. S. Department of the Army	W. M. Jones
U. S. Department of the Interior, Bureau of Reclamation	J. W. Reif
U. S. Department of the Navy, Naval Construction Battalion Center	R. L. Clark
Western Area Power Authority	G. D. Birney

The members of the HVACC/NEMA 8SGV Working Group at the time of development were:

S. Telander, Chairman
C. H. White, Secretary
M. Williams, Program Administrator

J. Boerger
A. J. Kalvaitis
D. Swindler

This standard was reviewed and recommended for submittal to the American National Standards Committee on Power Switchgear (C37) by Subcommittee II (High-Voltage Switchgear) of the High-Voltage Apparatus Coordinating Committee. The members of Subcommittee II at the time of review in 1981 were:

R. B. Shores, Chairman
E. J. Huber, Secretary

R. H. Arndt
R. Bennett
J. H. Boerger
B. Bridger
F. L. Cameron
D. B. Cole
P. W. Dwyer
R. A. Few
J. D. Finley
J. Fox
A. J. G. Kalvaitis
W. E. Laubach
P. C. Lyons
G. O. Perkins
E. Rapske
R. W. Seelbach
M. J. Shepnew
D. L. Swindler
S. H. Telander

The members of the NEMA 8SGV Technical Committee at the time of adoption were:

S. Telander, Chairman
C. H. White, Secretary

P. Clickner
H. Keating
S. Roberts
G. Sakats
D. Swindler
A. Tomeo
C. L. Welter

Copyright National Electrical Manufacturers Association
Provided by IHS under license with NEMA
No reproduction or networking permitted without license from IHS
Not for Resale

Contents

SECTION PAGE

1. Scope 7
   1.1 General 7
   1.2 Definitions 7
2. Referenced Standards 8
   2.1 Referenced American National Standards 8
   2.2 Other Referenced Standard 8
3. General Test Conditions 8
   3.1 Ambient Conditions 8
   3.2 Protection Conditions for Control and Instrumentation 8
4. Conformance Test Requirements 8
   4.1 General 8
   4.2 Test Requirements 8
   4.3 Test Arrangements 9
   4.4 Commonalities of Designs and Tests 9
   4.5 Dielectric Tests 10
   4.6 Mechanical Performance Tests 11
   4.7 Continuous Current Test 12
   4.8 Short-Circuit Current-Carrying Test 14
   4.9 Momentary Current Withstand Test 15
5. MEI Switchgear Components 16
   5.1 Accessory Devices 16
   5.2 Bus Bar Structures 16
6. Enclosure Conformance Tests 16
   6.1 Category A Test Requirements 16
   6.2 Category C Test Requirements 18
7. Treatment of Failures 18
8. Production Tests 18
   8.1 Low-Frequency Withstand Voltage Tests 18
   8.2 Mechanical Operation Tests 18
   8.3 Grounding of Instrument Transformer Cases Test 18
   8.4 Electrical Operation and Wiring Tests 18
9. Retesting 18

Tables

Table 1 Test Arrangements 9
Table 2 Copper Conductor Size for Use in Continuous Current Tests 14
Table 3 Test Values 17

Figures

Figure 1 Pry Test Bar 19
Figure 2 Pull Hook 21
Figure 3 Face Detail for Deflection Tool 21

Appendixes

Appendix A Conformance Guide for Evaluation of Changes Made in Insulating Materials and Systems 22

A1. Scope and Purpose 22

A2. Related Standards 22

A3. Definitions 23

Copyright National Electrical Manufacturers Association
Provided by IHS under license with NEMA
No reproduction or networking permitted without license from IHS
Not for Resale

SECTION PAGE

A4. Requirements 23

A5. Tests 26

Table A1 Relative Thermal Indexes and Insulating Functions 25

Figure A1 Bus Insulation Deflection Test Apparatus 26

Appendix B Guide for Methods of Power-Factor Measurement for Low-Voltage Inductive Test Circuits 27

Copyright National Electrical Manufacturers Association
Provided by IHS under license with NEMA
No reproduction or networking permitted without license from IHS
Not for Resale

American National Standard
for Switchgear–

Metal-Enclosed Interrupter Switchgear Assemblies – Conformance Testing

1. Scope

This standard is a conformance testing standard optionally applicable to all metal-enclosed interrupter switchgear assemblies designed, tested, and manufactured in accordance with American National Standard for Metal-Enclosed Interrupter Switchgear, ANSI/IEEE C37.20.3-1987. The requirement of ANSI/IEEE C37.20.3-1987 is sufficient for application of metal-enclosed interrupter switchgear assemblies, and conformance testing is not necessary to satisfy the basic requirements of that standard. Conformance testing is performed to show compliance with the basic requirements when required to satisfy special agreements of regulatory agency requirements. Conformance testing may be performed associated with the basic design testing if agreeable to those concerned; however, conformance testing is more likely to be performed some time after original development to satisfy a special need. Conformance testing need not be performed if not required.

Metal-enclosed interrupter (MEI) switchgear may include control and instrumentation components unique for the application, which are not individually evaluated under this standard. However, these components must be suitably protected as specified in 3.2.

NOTE: In this standard, the use of the term "MEI switchgear" shall be considered to mean "metal-enclosed interrupter switchgear."

This standard does not cover equipment intended for use in installations under the exclusive control of electric utilities for the purpose of communication or metering, or for the generation, control, transformation, transmission, and distribution of electric energy located in buildings used exclusively by utilities for such purposes or located outdoors on property owned or leased by the utility or on public highways, streets, or roads, or outdoors by established rights on private property.

1.1 General. This standard specifies the tests that shall be required to demonstrate that the MEI switchgear being tested conforms with the ratings assigned to it and meets the electrical and mechanical performance requirements specified in ANSI/IEEE C37.20.3-1987.

1.2 Definitions

1.2.1 Design Tests. Design tests are tests made by the manufacturer to determine the adequacy of the design of a particular type, style, or model of equipment or its component parts to meet its assigned ratings and to operate satisfactorily under normal service conditions or under special conditions if specified. Design tests may be used to demonstrate compliance with applicable standards of the industry.

NOTES

(1) Design tests are made on representative apparatus or prototypes to verify the validity of design analysis and calculation methods and to substantiate the ratings assigned to all other apparatus of basically the same design. These tests are not intended to be made on every design or to be used as part of normal production. The applicable portion of these design tests may also be used to evaluate modifications of a previous design and to assure that performance has not been adversely affected. These data from previous similar designs may also be used for current designs, where appropriate. Once made, the tests need not be repeated unless the design is changed so as to modify performance.

(2) Design tests are sometimes called "type tests."

1.2.2 Production Tests. Production tests are tests made for quality control by the manufacturer on every device or representative samples, or on parts or

Copyright National Electrical Manufacturers Association
Provided by IHS under license with NEMA
No reproduction or networking permitted without license from IHS
Not for Resale

materials as required to verify during production that the product meets the design specifications and applicable standards.

NOTES:
(1) Certain quality assurance tests on identified critical parts of repetitive high-production devices may be tested on a planned statistical sampling basis.
(2) Production tests are sometimes called "routine tests."

1.2.3 Conformance Tests. Conformance tests demonstrate compliance with the applicable standards. The test specimen is normally subjected to all planned production tests prior to initiation of the conformance test program.

NOTE: The conformance tests may, or may not, be similar to certain design tests. Demonstration of margin (capabilities) beyond the standards is not required.

2. Referenced Standards

2.1 Referenced American National Standards. This standard is intended to be used in conjunction with the following American National Standards. When these standards are superseded by a revision approved by the American National Standards Institute, Inc, the revision shall apply.

ANSI C37.55-1989, Conformance Test Procedure for Metal-Clad Switchgear

ANSI C37.58-1990, Indoor AC Medium-Voltage Switches for Use in Metal-Enclosed Switchgear – Conformance Test Procedures

ANSI/IEEE C37.09-1979 (R1989), Test Procedure for AC High-Voltage Circuit Breakers Rated on a Symmetrical Current Basis

ANSI/IEEE C37.20.3-1987, Metal-Enclosed Interrupter Switchgear

ANSI/IEEE C37.26-1972 (R1978), Guide for Methods of Power-Factor Measurement for Low-Voltage Inductive Test Circuits (see Appendix B)

ANSI/IEEE 4-1978, Techniques for High-Voltage Testing

2.2 Other Referenced Standard. This standard is also intended for use in conjunction with IEEE Standard for Indoor AC Medium-Voltage Switches for Use in Metal-Enclosed Switchgear, IEEE C37.20.4[1]

[1] At the time of publication of this standard, IEEE C37.20.4 was under development. Contact the secretariat for more recent information.

3. General Test Conditions

3.1 Ambient Conditions. The conditions prevailing at the test site during tests on MEI switchgear shall be those usual service conditions in Section 3 of ANSI/IEEE C37.20.3-1987, except that the temperature of the air surrounding the assembly (ambient) for the continuous current test shall be within the range of 10°C to 40°C.

3.2 Protection Conditions for Control and Instrumentation. All voltage circuits used for control, relaying, or metering shall be protected within the MEI switchgear as follows:

(1) All circuits supplied from external sources (ac or dc) shall have short-circuit protection within the control source incoming section. This may be provided by a single set of short-circuit protective devices.

(2) All circuits supplied from internal sources (ac or dc) shall have short-circuit protection within the same section as the supply source. If these circuits are supplied by a control power transformer, this protection may be in the primary circuit only.

Overcurrent protection of voltage circuits may be provided in addition to the required short-circuit protection.

Voltage transformers or potential devices and current transformers shall be used for all instruments, meters, and relays connected to alternating-current circuits over 240 volts in order to reduce the voltage on instrument wiring which must necessarily be closely grouped.

Other circuits supplying loads such as heaters, lights, or receptacles shall have overload and short-circuit protection.

Overcurrent protection is not permitted in current transformer secondary circuits.

4. Conformance Test Requirements

4.1 General. Tests are made on representative test arrangements of MEI switchgear as described in 4.3 to demonstrate the capability of the MEI switchgear design to meet its assigned ratings and to operate under normal service conditions as outlined in Section 3 of ANSI/IEEE C37.20.3-1987. The interrupter switch design utilized shall have been previously qualified in accordance with or tested simultaneously with the requirements of ANSI C37.58-1990.

4.2 Test Requirements. Representative test arrangements shall be subjected to the following tests, as

Copyright National Electrical Manufacturers Association
Provided by IHS under license with NEMA
No reproduction or networking permitted without license from IHS
Not for Resale

Table 1
Test Arrangements

MEI Switchgear			Interrupter Switch	
Test Arrangement Number	Rated Maximum Voltage (kV)	Rated Continuous Current (Amps)	Short-Time Current Capability (Rms Sym) kA	Fault Closing Capability (Rms Asv) kA
1–3	4.76	600	12.5, 25, and 38	20, 40, and 61
4–7	4.76	1200	12.5, 25, 38, and 50	20, 40, 61, and 80
8–10	8.25	600	12.5, 25, and 38	20, 40, and 61
11–14	8.25	1200	12.5, 25, 38, and 50	20, 40, 61, and 80
15–17	15.0	600	12.5, 25, and 38	20, 40, and 61
18–21	15.0	1200	12.5, 25, 38, and 50	20, 40, 61, and 80
22–24	25.8	600	12.5 and 25	20 and 40
25–28	38.0	600	12.5 and 25	20 and 40

described in the paragraphs indicated in parentheses, to prove the adequacy of the design:

(1) Dielectric test (4.5)
(2) Mechanical performance test (4.6)
(3) Continuous current test (4.7)
(4) Short-circuit current carrying test (4.8)
(5) Momentary current withstand test (4.9)

4.3 Test Arrangements. Where power fuses are utilized, fuses of the maximum rating shall be included in the test. Two test arrangements are required to verify conformance of units provided with power fuses and similar units without power fuses. When current-limiting fuses are used, an overall rating may be assigned to the combination.

4.3.1 Stationary Switch Arrangement. The test arrangement shall contain a three-phrase interrupter switch (and three power fuses if applicable) with necessary bus and bus supports located in a metal-enclosed structure.

The interrupter switch will be connected to a main bus of the following ratings:

Interrupter Switch Rating (amperes)	Main Bus Rating
200	600
600	600
1200	1200

The main bus will extend through an insulating plate on the side of the vertical section approximately 12 inches (300 mm) for test connection in accordance with Table 2.

Test connection shall be brought to the interrupter switch terminals (or load side of the fuse terminal) in accordance with Table 2. The connections shall either be brought through the bottom of the vertical section or through a cut-out, insulated and closed on one side near the floor line.

4.3.2 Drawout Switch Arrangement. If the design of the drawout interrupter switch structure is physically equivalent to the structure for metal-clad switchgear, the requirements of ANSI C37.55-1989 apply.

If the design of the drawout interrupter switch structure is not physically equivalent to the structure for metal-clad switchgear, the test arrangement requirements for the stationary arrangement shall be utilized.

4.4 Commonalities of Designs and Tests. Due to similarities in design and construction of functional elements used on several different types, styles, models, sizes, or ratings of MEI switchgear, a test conducted on one test arrangement shall be properly extended to qualify other test arrangements using similarly designed elements within the intent of this standard. In each case, consideration must be given to the nature of the specific test, its influence on the MEI switchgear performance, and the elements of the MEI switchgear that will be affected. Listed in Table 1 are the various voltage and continuous current ratings of MEI switchgear and the associated interrupter switch fault closing and short-circuit current capabilities. Representative test arrangements are to be selected from them. The criteria below are intended for information and guidance in the selection of the representative test arrangement for each test and shall not limit its applicability.

Copyright National Electrical Manufacturers Association
Provided by IHS under license with NEMA
No reproduction or networking permitted without license from IHS
Not for Resale

(1) *Dielectric tests.* One test arrangement for each voltage class or the combination of voltage classes that has the most highly electrically stressed insulation; for example, minimum air clearance or shortest creepage path.

(2) *Mechanical performance tests.* The highest continuous current rating of interrupter switch used with each type of interlocking arrangement.

(3) *Continuous current test.* The most compact design for each continuous current rating and having the highest current density.

(4) *Short-circuit current carrying test.* The highest short-circuit current densities.

(5) *Momentary current withstand test.* For comparable bus and bus bracing and spacings, the smallest conductor size; or for comparable bus design, the highest short-circuit current rating.

Representative test arrangements shall be determined prior to testing.

4.5 Dielectric Tests. Low-frequency withstand voltage tests (4.5.2) and impulse withstand tests (4.5.3) shall be made on MEI switchgear assemblies to determine the ability of the insulation system to withstand overvoltages.

4.5.1 General. The tests on the insulation system shall be made as follows:

(1) With the stationary interrupter switch in position or with the drawout switch in the connected position, apply the test voltage between primary circuits and ground:

(a) With the interrupter switch contacts closed; between each phase of the test arrangement individually with the frame and the other phases grounded.

(b) With the interrupter switch contacts open; between each terminal of the test arrangement individually with the frame and all other terminals grounded.

(2) If drawout, with the interrupter switch in the test position and closed, apply the test voltage to primary circuits simultaneously to the terminals on the incoming side of the test arrangement with the frame outgoing terminals grounded. Repeat tests by applying the test voltage to the outgoing side with the frame and incoming side terminals grounded.

4.5.2 Low Frequency Withstand Voltage Tests

4.5.2.1 Purpose of Tests. When these tests are applied to a new MEI switchgear, they demonstrate the low-frequency withstand voltage rating assigned to the MEI switchgear in accordance with ANSI/IEEE C37.20.3-1987.

4.5.2.2 Description of Tests

(1) Low-frequency withstand tests shall be made in accordance with ANSI/IEEE 4-1978, unless otherwise specified.

(2) The voltage to be applied for one minute shall be the rated low-frequency withstand voltage. (See ANSI/IEEE C37.20.3-1987.)

(3) The frequency of the test voltage shall be the rated frequency of the interrupter switch ± 20%.

(4) The voltage shall be an alternating single-phase voltage.

(5) In making the test, the initial voltage applied shall be permitted to be not more than 50% of the appropriate test level. The voltage shall be raised uniformly at a rate not greater than 750 volts per second to the test level. The voltage shall be held at the test level for not less than one minute. The voltage shall be reduced uniformly to 50% of test level or less before it is switched off.

(6) The test shall be made at the atmospheric temperature, pressure, and humidity prevailing at the test site. Suitable correction factors shall be permitted to be applied to the actual measured values of low-frequency withstand voltage to convert them to the standard atmospheric conditions in accordance with 1.3.4 of ANSI/IEEE 4-1978. Humidity correction factors shall be based on Figure 14 of ANSI/IEEE 4-1978.

4.5.2.3 Performance. The MEI switchgear shall be judged to have passed the test if it has withstood the required level of test voltage for one minute in accordance with the tests specified in 4.5.1. (Audible noises or discharges associated with corona which are frequently encountered in high-voltage testing are not necessarily indicative of failure.)

If the MEI switchgear did not pass, the provisions of Section 7 shall apply.

4.5.3 Impulse Withstand Test. These tests demonstrate conformance with the full wave impulse withstand voltage rating assigned to an MEI switchgear in accordance with ANSI/IEEE C37.20.3-1987. The MEI switchgear to be tested shall be new and clean and shall not have been subjected to prior tests, except as specified in Section 8, Production Tests and in 4.9.4(b), Momentary Current Withstand Test.

NOTE: Some insulating materials retain a charge after an impulse test, and for these cases care should be taken when reversing polarity. To allow the discharge of insulating materials, the use of appropriate methods, such as the application of impulses of the reverse polarity at lower voltages before tests, is recommended.

4.5.3.1 Description of Tests. The impulse withstand test shall be:

(1) Conducted in accordance with ANSI/IEEE 4-1978, unless otherwise specified.

Copyright National Electrical Manufacturers Association
Provided by IHS under license with NEMA
No reproduction or networking permitted without license from IHS
Not for Resale

(2) The standard 1.2/50 impulse voltage wave with crest value equal to the rated impulse withstand voltage of the MEI switchgear being tested shall be applied in accordance with 2.4 of ANSI/IEEE 4-1978. In these tests, three positive and three negative impulse voltages shall be applied to each point without causing damage or flashover; except, where prior testing shows that tests of one polarity are more severe, tests using the opposite polarity shall be omitted.

(3) Tests shall be made under dry conditions at the atmospheric temperature, pressure, and humidity prevailing in the test laboratory. Suitable correction factors shall be applied to the actual measured values of impulse voltages to convert them to standard atmospheric conditions in accordance with 1.3.4 of ANSI/IEEE 4-1978. Humidity correction factors shall be based on curves derived for rod gaps in accordance with Figure 14 of ANSI/IEEE 4-1978.

4.5.3.2 Performance. Based upon tests conducted with each test sequence being comprised of three consecutive applications of impulse voltage, the evaluation of the performance of the MEI switchgear shall be made on the basis of each of these sequences. If no disruptive discharge or flashover occurs during a particular sequence, the MEI switchgear shall be judged to have passed that sequence. If a single disruptive discharge or flashover has occurred during a particular sequence, that sequence shall be repeated for the same terminal or terminal grouping. During the repeated sequence if there is no disruptive discharge or flashover, the MEI switchgear shall be judged to have passed the repeaated sequence with the single disruptive discharge or flashover occurring in the first sequence being considered to have been a random occurrence. If a disruptive discharge or flashover occurs during the repeated sequence, the MEI switchgear shall be judged to have failed that sequence only and the provisions of Section 7 shall be applied.

For an MEI switchgear to be judged to have demonstrated the assigned rated impulse withstand test voltage, it shall have passed all of the required tests in accordance with 4.5.1.

4.6 Mechanical Performance Tests

4.6.1 Removable Interrupter Switch. Mechanical endurance tests shall be performed to demonstrate proper operation of the following elements with all external primary connections removed.

(1) Separable primary contacts

(2) Separable control contacts (if provided)

(3) Interrupter switch removable element position interlocks

(4) Stored energy mechanism interlocks, as applicable

(5) Auxiliary switches

(6) Housing switches

The tests shall be performed with an interrupter switch incorporating a mechanism with fault-closing capability. Tests are not required on interrupter switches having other types of mechanisms if the interlocks are the same for both. If they are not, the other designs shall be tested.

The test shall consist of 10 complete cycles of operation as described without repair or replacement of any functional parts.

The interrupter switch shall be open and in the disconnected position with the stored energy mechanism discharged. Separable contacts shall be lubricated according to the manufacturer's recommendations.

Each complete cycle of operation shall consist of the following steps:

Step 1. Move the interrupter switch to the test position.

NOTE: The test position may correspond to the disconnect position.

(a) Close the interrupter switch.

(b) Check to assure that the interrupter switch cannot be moved to the connected position while closed.

(c) Open the interrupter switch.

Step 2. Move the interrupter switch to a position approximately midway between the test and connection positions.

(a) Check to assure that the interrupter switch cannot be closed, either electrically or mechanically.

Step 3. Move the interrupter switch to the connected position.

(a) Close the interrupter switch.

(b) Check to assure that the interrupter switch cannot be moved out of the connected position while closed.

(c) Open the interrupter switch.

Step 4. Move the interrupter switch to a position approximately midway between the test and connected positions.

(a) Check to assure that the interrupter switch cannot be closed, either electrically or mechanically.

Step 5. Move the interrupter switch to the test position.

(a) Close the interrupter switch.

(b) Check to assure that the interrupter switch cannot be moved to the connected position while closed.

Copyright National Electrical Manufacturers Association
Provided by IHS under license with NEMA
No reproduction or networking permitted without license from IHS

Not for Resale

(c) Open the interrupter switch.

Step 6. Move the interrupter switch to the disconnect position.

NOTE: The disconnect positions may correspond to the test position.

After completion of 10 cycles, check to assure that if the mechanism can be left in the fully-charged condition, either the closing or racking function is blocked.

4.6.2 Stationary Interrupter Switch. Mechanical endurance tests shall be performed to demonstrate proper operation of the following interlocks:

(1) Interlock to prevent access to the fuses with the interrupter switch closed.

(2) Interlock to prevent closing of the interrupter switch if the access door to fuses is open.

(3) Interlock to prevent access to the fuses unless the interrupter switch is in open position and the closing mechanism is in the discharged or blocked position.

The tests shall be performed with an interrupter switch incorporating a mechanism with fault-closing capability. Tests are not required on interrupter switches having other types of mechanisms if the interlocks are the same for both. If they are not, the other designs shall be tested.

The test shall consist of 10 complete cycles of operation as described without repair or replacement of any functional parts.

The interrupter switch shall be open with the stored energy mechanism discharged.

Each complete cycle of operation shall consist of the following steps:

Step 1.

(a) Close the interrupter switch.

(b) Check to assure that the access door to the fuses cannot be opened.

Step 2.

(a) Open the interrupter switch.

(b) Open the access door to the fuses.

(c) Check to assure that the interrupter switch cannot be closed with the door open.

(d) Close door.

In addition, for mechanisms that prevent access to fuses when the closing mechanism is in the charged position:

Step 3.

(a) Charge the fault-closing mechanism.

(b) Check to assure that the access door to the fuses cannot be opened with the switch charged.

4.6.3 Performance. At the completion of these tests, the mechanism parts and interlocks shall be in essentially the same condition as before the test. There shall be no galling of the separable primary or control contacts of drawout interrupter switches. If the MEI switchgear is judged to have failed, the provisions of Section 7 shall apply.

4.7 Continuous Current Test. The continuous current test is made to ensure that the MEI switchgear test arrangement can carry the interrupter switch rated continuous current at rated frequency without exceeding the allowable temperature limits specified in Tables 2 and 3 of ANSI/IEEE C37.20.3-1987, and in IEEE C37.20.4.[1]

The MEI switchgear test arrangement shall be tested using a three-phase source of power at a frequency of no less than rated frequency. The MEI switchgear to be tested shall be clean and dry. If the test arrangement selected for continuous current tests has been subjected to prior tests, it shall be permitted to be maintained. The average of the three-phase currents is to be maintained at no less than the rated continuous current of the interrupter switch. A single-phase source of power (all phases in series with flow of current reversed with adjacent phases) may be used at the option of the manufacturer. Any convenient voltage shall be used.

NOTE: Usual practice is to supply the current by using transformers whose output voltages are less than 10 volts in order to avoid interference with temperature-measuring equipment.

The current source may be connected to either the main bus or the switch (fuse) terminals.

4.7.1 Duration of Tests

4.7.1.1 The continuous current test shall be made for such a period of time that the temperature rise of any monitored point in the test arrangement has not increased by more than 1.0°C during each of two successive 30-minute intervals as indicated by three successive readings. If the temperature rise at the end of the second interval is equal to the established limits and if the temperature rise has increased since the previous reading, the test shall be continued until the temperature rise is constant.

4.7.1.2 At the same time as three successive temperature measurements are being made for the purpose of determining the stability of temperature rise, the currents in each of the three phases of the MEI switchgear shall also be measured. The average of these nine current measurements shall not be less than the rated continuous current of the MEI switchgear. No individual current measurement shall be less than 90% or more than 110% of the rated continuous current. When the temperature is being monitored on only one phase of the MEI switchgear as specified in 4.7.2.5, the average of three currents shall be used and

Copyright National Electrical Manufacturers Association
Provided by IHS under license with NEMA
No reproduction or networking permitted without license from IHS
Not for Resale

none of the current measurements on the monitored phase shall be less than the rated continuous current.

4.7.2 Method of Measuring Temperatures. The temperatures of various parts of the test arrangement shall be monitored with thermocouples connected to a suitable temperature-measuring device.

4.7.2.1 Thermocouples shall be held in intimate contact with the metallic parts whose temperature is being monitored by such methods as welding, drilling and peening, or cementing. Whenever possible, unless otherwise specified, thermocouples shall be located on or near the uppermost side of the part being monitored.

4.7.2.2 Thermocouples shall be used to monitor the temperature rise of insulating members that are in intimate contact with continuous current-carrying parts. These thermocouples shall be located in the current-carrying part as close as practical to the accessible junction of the insulation and the metallic part. Normally thermocouples shall be located near both incoming and outgoing ends of each insulating component where a continuous current-carrying part passes through more than 3 inches (77 mm) of insulation as measured along the principal axis of the conductor. For cable terminations, the thermocouples shall be located at the junction of the conductor and its insulation.

4.7.2.3 Thermocouples used to monitor the temperature rise of separable primary contacts (if drawout), of interrupter switch main contacts, and of hinged contacts in the continuous current path shall be located within approximately 0.5 inch (13 mm) of the actual contact area unless otherwise specified in this standard. It is recognized that thermocouples cannot be located directly in the actual contact area without destroying the functional effectiveness of the contact. Thermocouples shall be located on both incoming and outgoing sides of each single-contact area. Where a contact assembly is comprised of multiple segments cooperating in a parallel combination to perform a single-contact function, the multiple contact assembly shall be treated as a single contact for purposes of this section. Where a contact assembly is comprised of one or more bridging members, each functioning in a series combination with actual contact areas at both ends of the individual bridging element so that the multiple contact assembly performs a single-contact function, the contact assembly shall be treated as a single contact for purposes of this section if the distance between actual contact areas is less than 3 inches (77 mm). For bridging-type contact assemblies having actual contact areas further apart than 3 inches (77 mm), a single thermocouple shall be located in at least one bridging member approximately midway between actual contact areas in addition to the thermocouple required at both incoming and outgoing sides of the contact assembly.

4.7.2.4 Where insulation is disposed along the primary conductor adjacent to the near side of a contact area such that two thermocouples would be located within 3 inches (77 mm) of each other under provisions stated in 4.7.2.2 and 4.7.2.3, the thermocouple adjacent to the near side of the contact area shall be omitted.

4.7.2.5 Where prior tests indicate that stabilized temperature readings for corresponding locations on each of the phase-conducting components are not different from each by more than 5°C, it shall be permitted to monitor only the interior phase members of the test arrangement. If prior tests indicate that a particular location on any phase had a temperature rise within 5°C or less of the maximum allowed temperature rise for that location, all similar locations on each phase of the test arrangement shall be monitored.

4.7.2.6 The temperature of parts of the MEI switchgear accessible to an operator during the normal course of operation shall be monitored. A single thermocouple shall be permitted to be located at a position that shall reasonably reflect the average temperature of the several accessible parts.

If prior tests or experience indicates that the temperature rise of a given accessible part would be within 5°C or less of the maximum allowable temperature rise, the thermocouple shall be located at a midposition on that particular part.

4.7.2.7 The temperature rise of primary conducting parts and contact areas that are provided for functions other than the carrying of continuous current and that are not directly in the continuous current path shall not be monitored even though such parts or contact areas may be in intimate contact with primary current-carrying conductors. Typical examples of such parts include, but are not limited to, auxiliary conductors and contacts for transferring current into interrupter assemblies during interrupter-switch-opening operations, and metallic supporting parts.

4.7.3 Measurement of Ambient Air Temperature. Indoor ambient air temperatures shall be determined by taking the average of the readings of three temperature-measuring devices such as thermometers or thermocouples, placed as follows:

(1) One level with the top of the structure.

(2) One 12 inches (305 mm) above the bottom of the structure.

(3) One midway between the two above positions.

All temperature-measuring devices shall be placed 12 inches (305 mm) from the structure, not in front of ventilators, and in locations unaffected by drafts caused by the structure or appreciable radiation from the equipment. When the ambient air temperature is

Copyright National Electrical Manufacturers Association
Provided by IHS under license with NEMA
No reproduction or networking permitted without license from IHS

Not for Resale

Table 2
Copper Conductor Size for Use in Continuous Current Tests

Interrupter Switch Rating		Copper Bars Per Terminal Size		Alternate Cable Size	
Rating	Quantity	Inch	(mm)	Circular	Mil
200 amperes	One	1/8" × 1"	3.17 × 25.4	One	#2/0 maximum
600 amperes	One	1/4" × 2"	6.35 × 50.8	Two	350 M.C.M.
1200 amperes	One	1/4" × 4"	6.35 × 101.6	Four	500 M.C.M.

NOTE: Where multiple bars are used, they are to be spaced 3/8 inch (9.52 mm) apart. Configurations shall be vertical unless the design of the test arrangement requires them to be horizontal. The determination of the configuration shall be at the option of the manufacturer.

subject to variations that might result in errors in measuring the temperature rise, the temperature-measuring devices should be immersed in suitable liquid such as oil in a suitable container or reliably attached to a suitable mass of metal.

NOTE: A convenient form for such a container consists of a metal cylinder with a hole drilled partly through it. This is filled with liquid and the temperature-measuring device placed inside it. A glass bottle may also be used as a container. The size of the container should be at least 1 inch (25.4 mm) in diameter and 2 inches (50.8 mm) high.

4.7.4 Copper Conductors for Use in Continuous Current Tests. Bus bars or cables as specified in Table 2 shall be utilized for connection to the bottom interrupter switch or fuse terminals and the main bus. Conductors shall extend for a minimum length of 4 feet from the main bus and terminals.

If test arrangement internal bus sizes are different than shown, external bus sizes equal to internal sizes may be substituted at the option of the manufacturer.

4.7.5 Performance. The MEI switchgear test arrangement shall be judged to have passed the test if the limits of observable temperature rise specified in Tables 2 and 3 of ANSI/IEEE C37.20.3-1987 and in IEEE C37.20.4[1] are not exceeded. If the MEI switchgear is judged to have failed, the provisions of Section 7 shall apply.

4.8 Short-Circuit Current-Carrying Test. A short-circuit current-carrying test shall be made to demonstrate the ability of the MEI switchgear test arrangement to carry current equal to the interrupter switch short-time current rating for a period of time equal to 2 seconds, unless limited to a shorter time by the protective device within the assembly. See 4.4, Table 1, for required values.

The interrupter switch designs shall have previously met the conformance test requirements for short-time capability as required by ANSI C37.58-1990. If the interrupter switch connections are physically equivalent to the interrupter switch test enclosure connections, only the main bus and ground bus require testing. If the MEI switchgear selected for test has been subjected to prior tests, it shall be permitted to be maintained.

The MEI switchgear shall be grounded with a minimum of 4/0 copper conductor.

4.8.1 Description of Tests

4.8.1.1 The main bus incoming terminals shall be connected to the test circuit power source. Three-phase tests shall be made with shorting bar(s) connected as follows:

(1) *For test of main bus only.* At the opposite end of the main bus from the incoming terminals, to cause the current flow through the main bus and splice. The test shall be for a period of 2 seconds.

(2) *For test of main bus and interrupter switch connections.* At the interrupter switch/fuse outgoing terminals. The test shall be for a period of 2 seconds unless limited to a shorter time by the protective device within the assembly.

The test shall be permitted to be either a three-phase test or a single-phase test. In case of a three-phase test, the level of current specified in 4.9.1.4 shall be required in only one of the phases. In case of a single-phase test, the current shall be permitted to be conducted through any two adjacent poles connected in series so that the current flows in opposite directions in each of the selected poles.

4.8.1.2 A single-phase test shall be made to prove the adequacy of the ground bus to also carry

Copyright National Electrical Manufacturers Association
Provided by IHS under license with NEMA
No reproduction or networking permitted without license from IHS
Not for Resale

current equal to the interrupter switch short-time current rating for a 2-second period. For this test, a short-circuit connection shall be made between the ends of the ground bus and the nearest phase main bus at the end opposite the test arrangement main bus incoming terminals.

4.8.1.3 The short-circuit connections shall be made with bolted bars of cross-section equal to the bus being tested.

4.8.2 Test Circuit Conditions

4.8.2.1 The current shall be monitored throughout the duration of the test. The rms (root-mean-square) value of current shall be determined using the method described in 7.1.6 of ANSI /IEEE C37.09-1979. This value squared times the duration of the test shall be no less than $(KI)^2Y$. The rms value of current for the three-phase test shall be no less than KI. (The value of Y is 2. See 4.8.1.1.)

To assure that the single-phase test is not required to be more severe mechanically than the three-phase test, its rms current level may be reduced to no less than 0.93 KI, and the time is to be extended to provide an equivalent I^2t.

4.8.2.2 The test voltage may be any convenient level. (A test voltage of 600 volts or less is commonly used.)

4.8.2.3 The circuit power factor (X/R ratio) may be any convenient value since the amount of current asymmetry will have a negligible effect on heating during the required periods.

4.8.2.4 If the test circuit meets the requirements of 4.9.3, this test may be combined with the momentary current withstand test (4.9).

4.8.3 Performance. The MEI switchgear shall be judged to have passed the test if it has carried the required rms level of current for the required time and has suffered no significant damage such as welding of drawout primary contacts or part breakage as a consequence of the test. If the MEI switchgear is judged to have failed the test, the provisions of Section 7 shall apply.

4.9 Momentary Current Withstand Test. A momentary current withstand test shall be made to demonstrate the mechanical adequacy of the structure, buses, and connections to withstand the maximum short-circuit stresses that could occur when properly applied on systems where the rms asymmetrical value of short-circuit current is equal to the fault-closing rating of the interrupter switches in MEI switchgear. See Table 1.

The interrupter switch designs shall have previously met the conformance test requirements for fault-closing performance as required by ANSI C37.58-1990. If the interrupter switch connections are physically equivalent to the interrupter switch test enclosure connections, only the main bus and ground bus require testing.

The MEI switchgear shall be grounded with a minimum of 4/0 copper conductor.

If the MEI switchgear selected for test has been subjected to prior tests, it shall be permitted to be maintained.

The incoming bus structure used in a switchgear assembly shall be considered as meeting the short-circuit requirements if its construction is equivalent to that of the main bus structure which was tested and found to meet the short-circuit requirements.

4.9.1 Description of Tests

4.9.1.1 The main bus incoming terminals shall be connected to the test circuit power source. Three-phase tests[2] shall be made with shorting bar(s) connected as follows:

(1) *For test of main bus only.* At the opposite end of the main bus from the incoming terminals, to cause current to flow through the main bus and splice. The test shall be for a period of 10 cycles on a 60-Hertz basis.

(2) *For test of main bus and interrupter switch connections.* At the switch/fuse outgoing terminals. The test shall be for a period of 10 cycles on a 60-Hertz basis unless limited to a shorter time by the protective device within the assembly.

4.9.1.2 A single-phase test shall be made to demonstrate the mechanical adequacy of the ground bus with respect to the nearest phase bus, to withstand the short-circuit stresses caused by carrying current having an asymmetrical value equal to the fault-closing rating of the interrupter switch. See Table 1. The short-circuit connection shall be made between the ends of the ground bus and the nearest phase main bus at the end opposite the test arrangement main bus incoming terminals.

4.9.1.3 Insofar as possible the test connections shall not add intentional bracing nor impose additional loading to the bus structure being tested.

4.9.2 Test Duration. The duration of current flow during the momentary current withstand test shall be for 10 cycles on a 60-Hertz basis (0.167 second) unless limited to a shorter time by the protective device within the assembly. (See 4.9.1.1.)

4.9.3 Test Circuit Conditions

4.9.3.1 The three-phase rms asymmetrical current that verifies the momentary current withstand

[2] Single-phase tests are permissible if it can be determined that they are at least as severe as the three-phase test.

Copyright National Electrical Manufacturers Association
Provided by IHS under license with NEMA
No reproduction or networking permitted without license from IHS
Not for Resale

rating shall be measured at the major peak of the maximum cycle as determined from the envelope of the current wave and calculated in accordance with ANSI/IEEE C37.09-1979.

4.9.3.2 The power factor of the test circuit shall be 15 percent lagging or less (X/R ratio of 6.6 or greater) with X and R in series connection. See Table 2 of ANSI/IEEE C37.26-1972.[3]

4.9.3.3 The frequency of the test circuit shall be 60 Hertz ± 20 percent.

4.9.3.4 The test voltage may be any convenient level. (A test voltage of 600 volts or less is commonly used.)

4.9.4 Performance. The MEI switchgear test arrangement shall be judged to have passed the test if it has carried the required current for the required time and there is no breakage of the bus supports and either:

(1) No permanent deformation of bus bars, or

(2) Deformation of bus bars up to 10% of design spacing is permitted. Deformation above this allowance requires repeat of impulse withstand tests (4.5.3) to verify conformance.

Permanent deformation of bus bars and supports shall not impair mechanical performance as specified in 4.6.

If the MEI switchgear is judged to have failed the test, the provisions of Section 7 shall apply.

5. MEI Switchgear Components

5.1 Accessory Devices

5.1.1 General accessory devices, as contrasted with functional components, are those devices that are not basically required for proper operation of the MEI switchgear, but perform a secondary or minor function as an adjunct or refinement to the primary function of the MEI switchgear. No conformance testing shall be required.

5.1.2 Cell-mounted functional components (e.g., mechanism-operated auxiliary switches) and accessories (e.g., interrupter switch position switches) shall conform to the requirements of their applicable device standards and shall not be tested electrically or mechanically other than to demonstrate performance as specified in this standard.

5.1.3 When accessory devices are mechanical only (e.g., key interlocks) and are operated rather infrequently, normal production tests shall be the criteria for demonstrating the operational performance of these devices.

5.2 Bus Bar Structures. Conformance testing of MEI switchgear test arrangements shall provide assurance that other bus bar structures (e.g., incoming bus, transfer bus, bus tie bus) are in conformance with this standard if it can be determined that the design criteria specified in 5.2.1 through 5.2.4 have been provided.

5.2.1 Dielectric Criteria

(1) Equal or greater bus bar insulation dielectric strength

(2) Equal or greater air clearance distances

(3) Equal or greater creepage distances phase-to-phase and phase-to-ground

5.2.2 Continuous Current Criteria

(1) Equal or greater conductor cross-sectional area

(2) Equal or greater ventilation

(3) Equal or greater conductor spacing

5.2.3 Short-Circuit Current-Carrying Criteria

(1) Equal or greater conductor cross-sectional area

5.2.4 Momentary Current Withstand Criteria

(1) Equal or greater conductor section modulus

(2) Equal or less bus support spacing

(3) Equal or greater bus support mechanical strength

(4) Equal or greater conductor spacing

6. Enclosure Conformance Tests

Enclosure conformance tests are only required if the manufacturer declares a specific category type in accordance with Appendix A of ANSI/IEEE C37.20.3-1987.

The conformance test requirements for Category B equipment are included in Appendix A of ANSI/IEEE C37.20.3-1987, Appendix A.

The conformance test requirements for Category A equipment are as specified in 6.1 of this standard. These tests shall be conducted to complete the provisions of this standard as applicable to the specified Category Type A, B, or C.

6.1 Category A Test Requirements

6.1.1 Test Terms

6.1.1.1 Enclosure Security. The completely assembled apparatus will resist unauthorized entry when tested according to the procedure of this standard.

6.1.1.2 Axial Force. Axial force is a force applied along the axis of the pry bar from its handle to its pry tip.

[3] ANSI/IEEE C37.26-1972 has been withdrawn as an American National Standard (pending review or reaffirmation), but is reproduced in Appendix B to aid in the completion of the requirements of ANSI C37.57-1990.

Copyright National Electrical Manufacturers Association
Provided by IHS under license with NEMA
No reproduction or networking permitted without license from IHS
Not for Resale

6.1.1.3 Prying Leverage. Prying leverage is a force at right angles to the handle times the distance from this force to the point of insertion of the pry tip into a joint or crevice of the enclosure.

6.1.2 Test Equipment. The tests for enclosure security shall be conducted with the following equipment, or equivalent, as specified in 6.1.2.1 through 6.1.2.4.

6.1.2.1 Pry Bar. The pry bar, constructed according to Figure 1, is to be used for the pry tests. The force described below shall be applied to the handle.

(1) When an axial force is applied to the handle, the stack of Belleville washers is compressed. The amount of compression is a measure of the magnitude of the axial force applied. Using a scale or other force-measuring device, the pry bar shall be calibrated to measure the axial force used to force the tip into the joint under test.

(2) The prying leverage applied can be measured indirectly by measuring the deflection of the pry bar. The indicator is mounted on the pry bar and set to measure deflection of a certain length of the bar. A calibration can be made that will result in a table or curve showing prying leverage versus reading of the indicator.

6.1.2.2 Pull Tool. The device shown in Figure 2 shall be used in the pull tests.

6.1.2.3 Push Tool. A device that has a square face measuring 0.5 inch × 0.5 inch, as shown in Figure 3, with associated indicator to measure axial force shall be used to perform the deflection test.

6.1.2.4 Probe Wire. The probing wire shall be bare number 14 AWG softdrawn solid copper wire 10 feet long.

6.1.3 Tests

6.1.3.1 General. The enclosure shall be mounted on a flat surface according to the manufacturer's specification. With the access doors closed and locked, the following sequence of tests shall be performed:

(1) Pry tests (6.1.3.2)
(2) Wire probe tests (6.1.3.4)
(3) Pull tests (6.1.3.3)
(4) Wire probe tests (6.1.3.4)
(5) Deflection tests (6.1.3.5)
(6) Operation test (6.1.3.6)

6.1.3.2 Pry Tests. The pry bar shall be used on all joints, crevices, hinges, locking means, and the like, that exist between the enclosure components, including the enclosure/pad interface. The pry bar shall be permitted to be placed at any angle to the enclosure surface. The tip of the bar shall first be inserted in the opening being tested using the value of axial force specified in Table 3. Then, with the axial force being maintained, the prying force specified in Table 3 shall be applied. This force shall be applied alternately, first in one direction and then in the opposite direction (i.e., once in each direction). Applications of either or both axial and prying force shall be maintained so long as relaxation is occurring. When relaxation ceases, or if no relaxation occurs after the second test, the pry bar shall be removed and applied at an untested location.

Table 3
Test Values

Inward axial force	50 pounds
Prying leverage tests	900 inch-pounds
Pull test	150 pounds
Deflection test	100 pounds

6.1.3.3 Pull Tests. A pulling force shall be applied to the critical points of all enclosure parts that can be engaged by the pulling hook. A pulling force not exceeding the values in Table 3 shall be permitted to be exerted at any angle to the enclosure surface. This force is to be maintained during any relaxation. When relaxation ceases, or if no relaxation occurs, the pull test shall be terminated. The hook shall then be inserted into any other part that it can engage, and the test shall be repeated at the new location. All parts that can be engaged by the pull hook shall be tested once.

6.1.3.4 Wire Probe Tests. Following the pry tests and pull tests described in 6.1.3.2 and 6.1.3.3, an attempt to penetrate the enclosure with the probe wire shall be made. This penetration shall be attempted at all crevices and joints. The wire shall be straight with no prebands and shall be gripped by the tester with his bare hands. If the wire enters the joint, the wire shall be continually pushed until either it can no longer be pushed or it has entered the enclosure completely. This test is passed if an inspection determines either that the probing wire has not entered the enclosure, or if visible, that the probing wire is restricted by a barrier intrusion into the interior.

6.1.3.5 Deflection Tests. The deflection test shall be applied to all sides and walls of the enclosure. This test is passed if the specified force (see Table 3) applied perpendicularly to the surface of the enclosure does not impair the dielectric, mechanical, or corrosion performance of the equipment.

6.1.3.6 Operation Test. Following all of the tests set forth in 6.1.3.2 through 6.1.3.5, the enclosure shall be easily unlocked and opened and shall also be easily closed and locked.

Copyright National Electrical Manufacturers Association
Provided by IHS under license with NEMA
No reproduction or networking permitted without license from IHS
Not for Resale

6.1.4 Test Values. The minimum test values for which entry shall be prevented are provided in Table 3.

6.2 Category C Test Requirements. No enclosure security tests are required for Category C equipment.

7. Treatment of Failures

When failures occur during testing, the failures shall be evaluated, corrected, and the equipment shall be retested. A design change made to the MEI switchgear to correct a failure in a test shall be evaluated for its effect on preceding tests.

When analysis indicates that a particular corrective action would not have affected results obtained in previous tests, it shall be permitted to take the corrective action without repeating the previously completed tests.

When analysis indicates that a particular corrective action may have caused a failure in tests previously completed, only those tests that may have failed shall be repeated on the MEI switchgear to which the corrective action has been applied. In deciding whether or not to repeat a previous test, it is important that the decision be based on the corrective action taken and not on the failure which actually occurred.

8. Production Tests

Unless otherwise specified, all production tests shall be made by the manufacturer at the factory on the complete MEI switchgear or its component for the purpose of checking the correctness of manufacturing operations and materials. (See ANSI/IEEE C37.20.3-1987.)

Production tests shall include the following:

(1) Low-frequency withstand voltage tests (8.1)
(2) Mechanical operation tests (8.2)
(3) Grounding of instrument transformer cases test (8.3)
(4) Electrical operation and wiring tests (8.4)

8.1 Low-Frequency Withstand Voltage Tests. Low-frequency withstand tests shall be made at the factory on each switchgear assembly in the same manner as described in 4.5.2 with the exception that tests across the open gap(s) (see 4.5.1(2)) are not required. Tests shall be made in accordance with 4.5.1(1) and 4.5.2.2. Drawout interrupter switch removable elements need not be tested in the assembly if they are tested separately. Control devices, potential transformers, and control power transformers, which are connected to the primary circuit, may be disconnected during the test.

8.2 Mechanical Operation Tests. Mechanical operation tests shall be performed to ensure the proper functioning of removable element operating mechanisms, shutter, mechanical interlocks, and the like. These tests shall ensure the interchangeability of removable elements designed to be interchangeable.

8.3 Grounding of Instrument Transformer Cases Test. The effectiveness of grounding of each instrument transformer case or frame shall be checked with a low-potential source, such as 10 volts or less, using bells, buzzers, or lights. This test is required only when instrument transformers are of metal case design.

8.4 Electrical Operation and Wiring Tests

8.4.1 Control Wiring Continuity. The correctness of the control wiring of MEI switchgear shall be verified by (1) actual electrical operation of the component control devices, or (2) individual circuit continuity checks by electrical circuit testers, or by both (1) and (2).

8.4.2 Control Wiring Insulation Test. A 60-Hz test voltage, 1500 volts to ground, shall be applied for 1 minute after all circuit grounds have been disconnected and all circuits wired together with small bare wire to short-circuit coil windings. The duration of the test shall be 1 second if a voltage of 1800 volts is applied. At the option of the manufacturer, switchgear-mounted devices that have been individually tested may be disconnected during this test.

8.4.3 Polarity Verification. Tests or inspections shall be made to ensure that connections between instrument transformers and meters or relays or similar devices are connected with proper polarities. Instruments shall be checked to ensure that pointers move in the proper direction. This does not require tests using primary voltage and current.

8.4.4 Sequence Tests. MEI switchgear involving the sequential operation of devices shall be tested to ensure that the devices in the sequence function properly and in the order intended. This sequence test need not include remote equipment controlled by the MEI switchgear; however, this equipment may be simulated where necessary.

9. Retesting

Retesting is not required if the design has not changed. A design change made to the MEI switchgear shall be evaluated for its effect on rated performance. If it is determined that performance may be affected by the change, the relevant conformance tests shall be repeated.

See the Appendix for guidance in the evaluation of changes made in insulating materials and systems.

Copyright National Electrical Manufacturers Association
Provided by IHS under license with NEMA
No reproduction or networking permitted without license from IHS
Not for Resale

Copyright National Electrical Manufacturers Association
Provided by IHS under license with NEMA
No reproduction or networking permitted without license from IHS

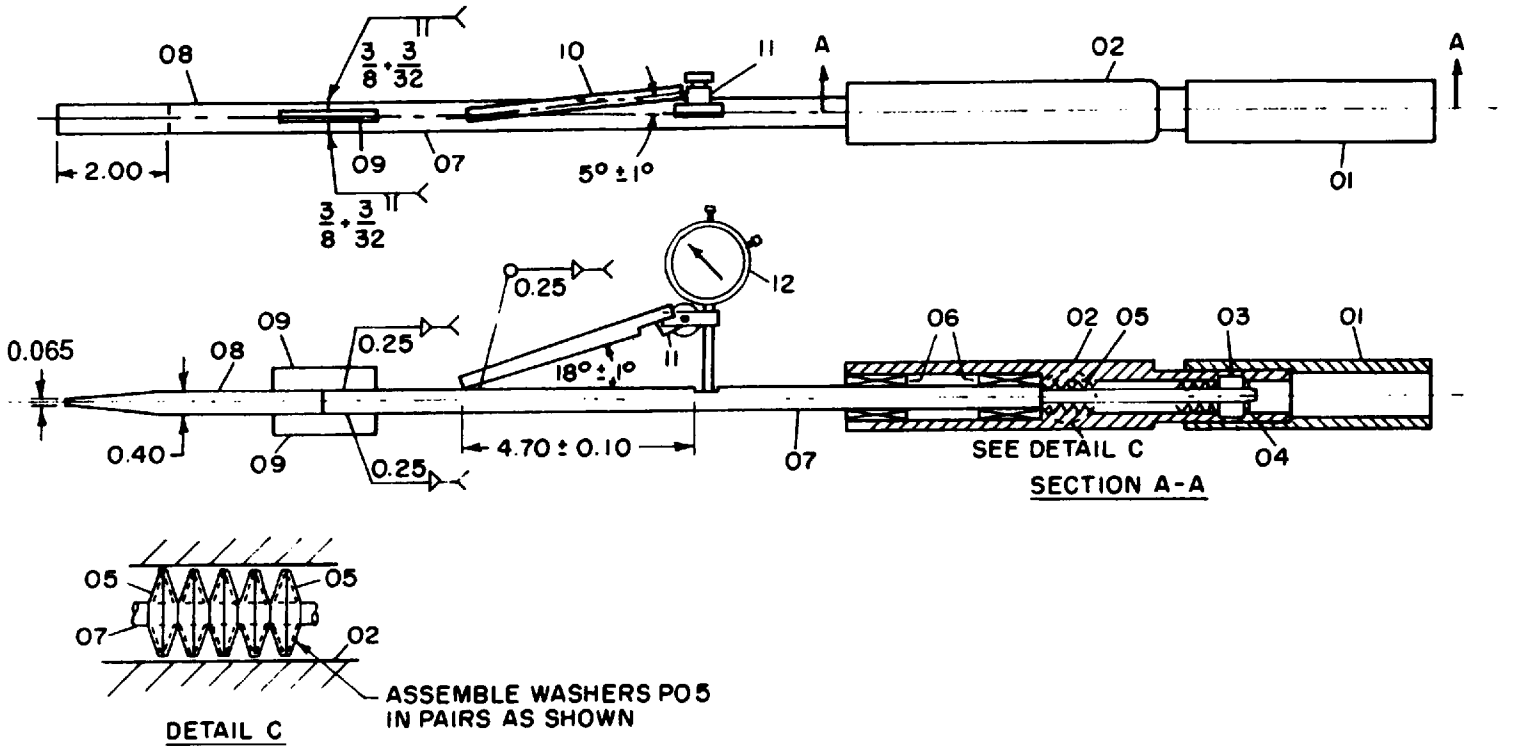

NOTES:

(1) All dimensions are in inches unless otherwise indicated.

(2) Quantity of Part Number 05 shall be permitted to vary from 90 to 100.

(3) Part Number 04 must extend into slot to restrict turning motion of Part Number 07.

(4) Calibration Instructions – Before the pry (test) bar can be used to measure the axial and prying leverage forces described in the standard, the bar must be calibrated. This calibration is accomplished for the axial force by applying standard forces at the end of the handle (Part Number 01) and marking the compression of the pry bar handle along the pry bar shaft (Part Number 07).

Next, the prying leverage must be calibrated by holding the pry bar tip (Part Number 08) in place and applying a standard force on the handle (Part Number 02). The deflection of the dial indicator (Part Number 12) is recorded for steps in force on the handle. The results can be used to develop a calibration curve of deflection versus prying leverage. When the pry bar is used in a test, the calibration curve is used to determine the inch-pounds of force.

Bill of Materials

Part No.	Name	Quantity	Description
01	Handle	1	–
02	Spring Housing	1	–
03	Spring Housing	1	–
04	Roll Pin	1	Steel 0.093 OD × 0.750 Long
05	Spring Washer	100	Belleville Catalog #1B0500-022
06	Ball Bushing	2	Thompson Ball Bushing Catalog #A-81420
07	Shaft	1	–
08	Chisel	1	1/2 inch (J. C. Penney Catalog #9253 or equivalent)
09	Weld Pad	2	–
10	Hold Rod	1	Brown & Sharpe Catalog #599-7900
11	Slide Swivel	1	Brown & Sharpe Catalog #599-7906
12	Torque Indicator	1	Brown & Sharpe Catalog #8241-942

Figure 1
Pry Test Bar

Not for Resale

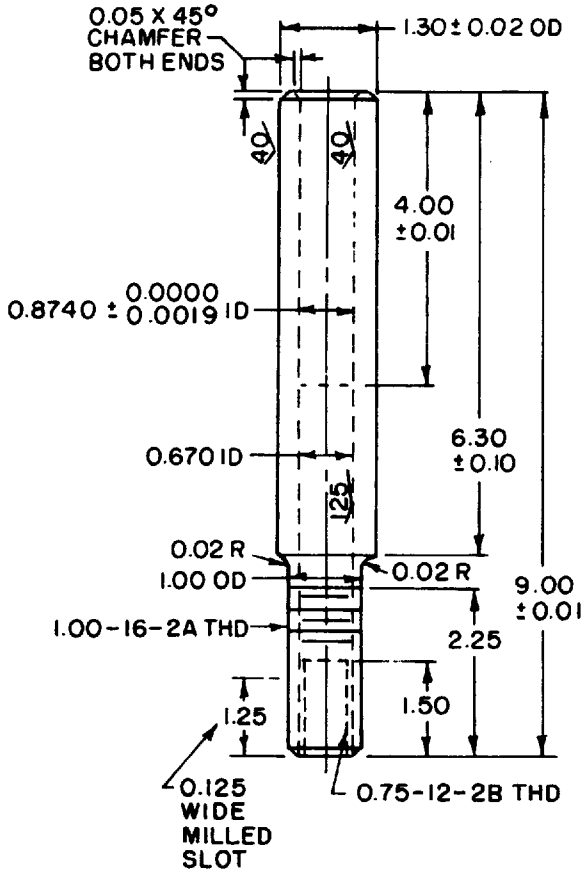

Part Number 02 – Steel 1.30 × 9.00

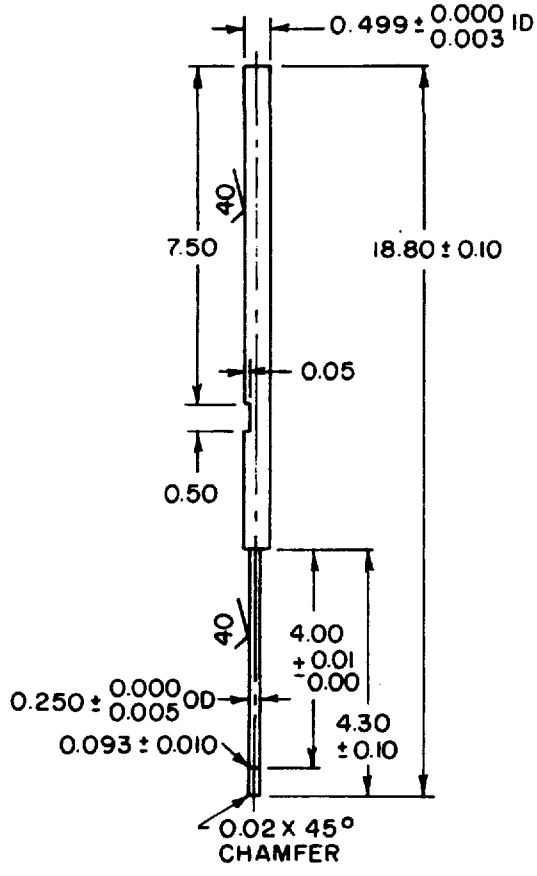

Part Number 07 – Drill Rod 0.50 × 18.80

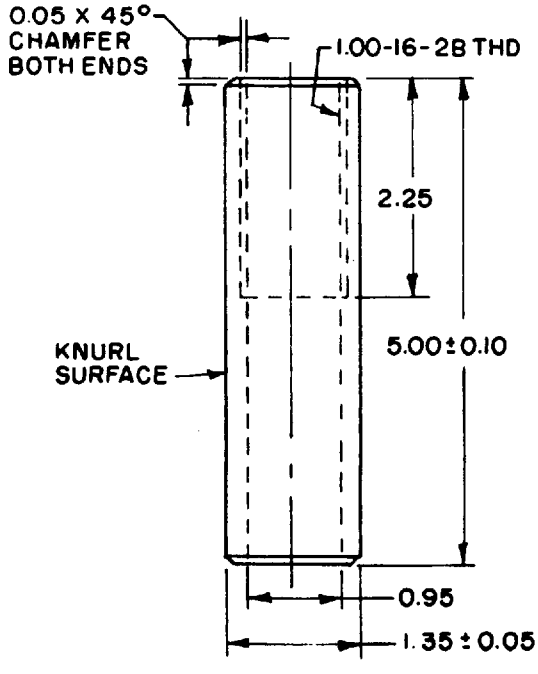

Part Number 01 – Steel 1.35 OD × 5.00

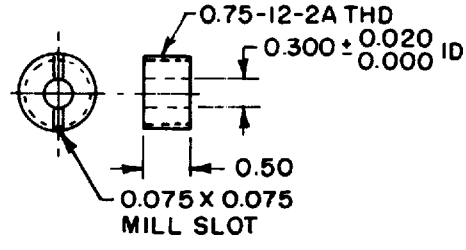

Part Number 03 – Steel 0.75 OD × 0.50

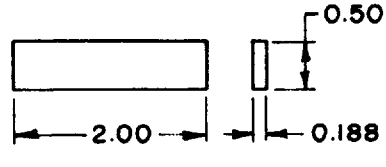

Part Number 09 – Steel 0.188 × 0.50 × 2.00

Figure 1
Pry Test Bar *(continued)*

Copyright National Electrical Manufacturers Association
Provided by IHS under license with NEMA
No reproduction or networking permitted without license from IHS
Not for Resale

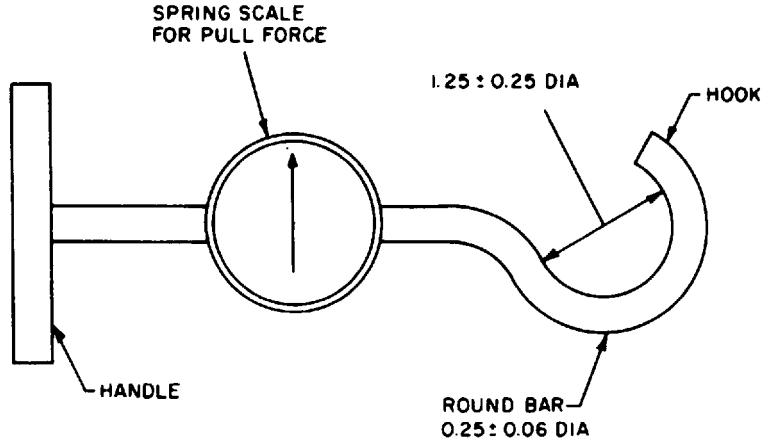

NOTES:
(1) All dimensions are in inches.
(2) Typical device: Iron Man scales, capacity: 200 lb, No. 1756T4, or the equivalent.

Figure 2
Pull Hook

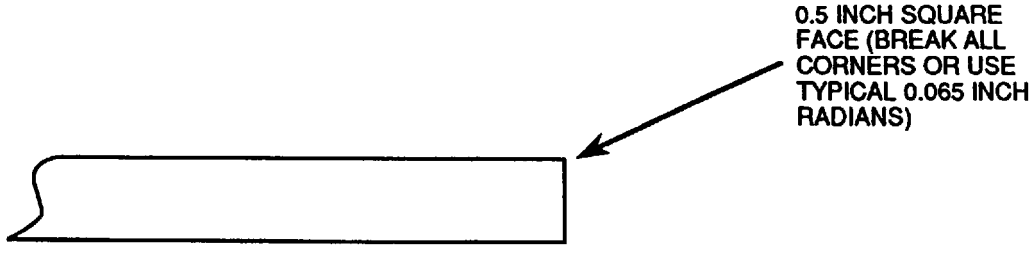

Figure 3
Face Detail for Deflection Tool

Copyright National Electrical Manufacturers Association
Provided by IHS under license with NEMA
No reproduction or networking permitted without license from IHS
Not for Resale

Appendixes

(These Appendixes are not part of American National Standard C37.57-1990, but are included for information only.)

Appendix A

Conformance Guide for Evaluation of Changes Made in Insulating Materials and Systems

The procedures of this guide are recommendations and not mandatory requirements of American National Standard C37.57-1990.

A1. Scope and Purpose

A1.1 Scope. This guide covers the conformance tests and requirements for evaluation of changes made in materials and insulation systems for metal-enclosed interrupter switchgear assemblies rated over 1000 volts through 38 kV ac.

The original design of the insulation system of the switchgear assembly should be in conformance with the requirements of American National Standard for Metal-Enclosed Interrupter Switchgear, ANSI/IEEE C37.20.3-1987.

A1.2 Purpose. The purpose of this guide is to provide a method for evaluating substitute insulating materials and systems so that changes made in these materials and systems may be evaluated without performing a complete series of conformance tests on the switchgear equipment.

A2. Related Standards

The following standards are intended for information or clarification only and are not essential to completing the requirements of this standard:

ANSI/IEEE C37.20.2-1987, Metal-Clad and Station-Type Cubicle Switchgear

ANSI/IEEE C37.20.3-1987, Metal-Enclosed Interrupter Switchgear

ANSI/IEEE C37.100-1981 (R1989), Definitions for Power Switchgear

ANSI/UL 94-1985, Tests for Flammability of Plastic Materials for Parts in Devices and Appliances

ANSI/UL 746B-1986, Polymeric Materials – Long-Term Property Evaluations

ASTM D 149-1990, Test Methods for Dielectric Breakdown Voltage and Dielectric Strength of Solid Electrical Insulating Materials at Commercial Power Frequencies[4]

ASTM D 150-1987, Test Methods for A-C Loss Characteristics and Permittivity (Dielectric Constant) of Solid Electrical Insulating Materials[4]

ASTM D 229-1986, Method of Testing Rigid Sheet and Plate Materials Used for Electrical Insulation[4]

ASTM D 256-1990, Test Methods for Impact Resistance of Plastics and Electrical Insulating Materials[4]

ASTM D 257-1990, Test Methods for D-C Resistance or Conductance of Insulating Materials[4]

ASTM D 648-1982 (1988), Test Method for Deflection Temperature of Plastics Under Flexural Load[4]

ASTM D 790-1990, Test Methods for Flexural Properties of Unreinforced and Reinforced Plastics and Electrical Insulating Materials[4]

ASTM D 2303-1990, Test Method for Liquid-Contaminant, Inclined-Plane Tracking and Erosion of Insulating Materials[4]

ASTM D 3029-1984, Test Method for Impact Resistance of Rigid Plastic Sheeting or Parts by Means of a Tup (Falling Weight)[4]

NEMA LI 1-1983, Industrial Laminated Thermosetting Products[5]

NEMA LI 6-1983, Relative Temperatures Indices of Industrial Thermosetting Laminates[5]

[4] Available from ASTM, 1916 Race Street, Philadelphia, PA 19103.

[5] Available from the National Electrical Manufacturers Association, 2101 L Street, NW, Washington, DC 20037.

Copyright National Electrical Manufacturers Association
Provided by IHS under license with NEMA
No reproduction or networking permitted without license from IHS
Not for Resale

NEMA SG 6-1974, Power Switching Equipment[5]

A3. Definitions

The definitions of terms contained in this document, or in other standards referred to in this document, are not intended to embrace all legitimate meanings of the terms. They are applicable only to the subject treated in this guide. Refer to ANSI/IEEE C37.100-1990 and ANSI/IEEE C37.20.3-1987 for definitions not given in this document.

A3.1 Ceramic Insulation. Insulation made of a vitrified ceramic material, such as porcelain or glass.

A3.2 Nonceramic Insulation. Nonceramic insulation is insulation made of a material other than ceramic. This category includes all organic insulating materials.

A3.3 Bus Insulation. Bus insulation is insulating material optionally used to cover primary voltage conductors except where that conductor is a cable or wire. (Bus joint insulation is excluded from this category and is treated separately.) The primary functions of bus insulation are to prevent arc motoring and to allow closer spacing of conductors than would be possible with bare conductors. Bus insulation may also, as a secondary function, be part of the bus support insulation system.

A3.4 Bus Joint Insulation. Bus joint insulation is insulating material optionally used to cover joints or connections in the primary voltage conductors. Bus joint insulation is otherwise similar to bus insulation.

A3.5 Bus Tap Insulation. Bus tap insulation is insulating material optionally used to cover low-current taps to the main primary voltage conductors. These taps include potential and control power transformer primary leads, connections to surge arresters and surge capacitors, and other similar connections. Bus taps may be in the form of a wire, rod, or bar especially insulated for this service, or in the form of an insulated wire or cable. Bus tap insulation is otherwise similar to bus insulation.

A3.6 Bus Support Insulation. Bus support insulation is insulation used primarily to physically support a conductor and prevent or limit its movement under specified operating conditions. Bus support insulation includes both conductor-to-conductor and conductor-to-structure supports.

A3.7 Barrier Insulation. Barrier insulation is insulation material used primarily to separate one item or area from another item or area within equipment. Examples are: (a) interphase barriers between poles of an interrupter switch; (b) bus barriers separating the bus compartment of one vertical section of switchgear from another; and (c) barriers used to shield grounded metal from electrical or thermal effects of circuit interruption within the equipment. Barrier insulation may be subdivided into two general types: Type 1 – barriers that are not in contact with and are not penetrated by energized parts; and Type 2 – barriers that are in contact with or are penetrated by energized parts.

A3.8 Drawout Switch Primary Disconnects. Drawout switch primary disconnects are penetration insulators that support bus stabs. Their primary function is to insulate the primary bus as it passes through the ground barrier and to support the bus so that it can properly engage the interrupter switch.

A3.9 Entrance Bushings. Entrance bushings are insulating structures including a through conductor, or providing a passageway for such a conductor, with provision for mounting on a barrier, insulating or otherwise, for the purpose of insulating the conductor from the barrier so that current may be conducted from one side of the barrier to the other. Entrance bushings can be vertically mounted (roof bushings) or horizontally mounted (wall bushings).

A3.10 Relative Thermal Index. The relative thermal index is an indication of a material's ability to retain a particular property when exposed to elevated use temperatures for an extended period of time. The relative thermal index (RTI) is determined by the procedures outlined in ANSI/UL 746B-1986. As used in this document, the electrical thermal index includes such properties as dielectric strength, arc resistance, and volume resistivity. The mechanical-without-impact RTI includes such properties as tensile, flexural, and shear strength. The mechanical-with-impact RTI includes the properties of the mechanical-without-impact RTI plus impact properties intended to stress the material under sudden shock loading conditions.

A4. Requirements

This section defines the requirements that must be met by various types of insulating materials for materials substitution.

A4.1 Nonceramic Insulation

A4.1.1 Resistance to Long-Term-Aging. Resistance to long-term aging should be demonstrated by

Copyright National Electrical Manufacturers Association
Provided by IHS under license with NEMA
No reproduction or networking permitted without license from IHS
Not for Resale

one or more of the methods specified in A4.1.1.1 through A4.1.1.4.

A4.1.1.1 The relative thermal indexes of the material should be determined in accordance with ANSI/UL 746B-1986 for each thickness of material used. Under normal operating conditions, a material used for an insulation function should not be exposed to temperatures in excess of its relative thermal indexes for the thickness used. Table A1 specifies which relative thermal indexes are to be considered for each insulating function.

A4.1.1.2 Resistance to long-term aging may be demonstrated by a history of satisfactory field service. This history must be of sufficient duration to satisfactorily demonstrate the material's long-term capabilities.

A4.1.1.3 Resistance to long-term aging may be demonstrated by testing of samples aged in service or artificially aged to adequately demonstrate retention of required properties.

A4.1.1.4 If it is desired to substitute a material for a previously qualified material, the substitute material will be considered to have satisfactorily long-term aging characteristics if it has relative thermal indexes equal to or greater than the relative thermal indexes of the previously qualified material. The relative thermal indexes to be compared are those required for the insulation function under consideration, as listed in Table A1.

A4.1.2 Thermal Cycling Withstand. Drawout switch primary disconnects, entrance bushings, and bus and bus tap insulation applied to conductors by dipping, molding, fluidized bed coating, or other processes that cause the insulation to adhere to the conductor, must not be damaged by variations in temperature. This capability should be evaluated by the thermal cycling withstand test, A5.1.

A4.1.3 Dielectric Withstand

A4.1.3.1 Substitute Bus Insulation, Bus Joint Insulation, and Bus Tap Insulation. Substitute bus insulation, bus joint insulation, and bus tap insulation should pass the test for bus bar insulation in accordance with 5.2.1.3 of ANSI/IEEE C37.20.2-1987 (foil test).

A4.1.3.2 Bus Support Insulation and Barrier Insulation. If it is desired to substitute another insulating material for the one used in the impulse withstand tests, the substitute material will be considered to have adequate dielectric strength if its perpendicular electric strength equals or exceeds the perpendicular electric strength of the original material. Measurement of perpendicular electric strength should be as described in the test method in ASTM D 149-1990 using the short-term method in air. (The use of the short-term method under oil should be permitted if the two insulating materials being compared are of the same generic type.)

A4.1.4 Flammability

A4.1.4.1 Substitute flame-resistant sheet or cast insulating materials used in any application other than Type-1 barriers should meet the requirements for class 94 V-O as set forth in ANSI/UL 94-1985 or those set forth in Method II of ASTM D 229-1986.

A4.1.4.2 Substitute flame-resistant sheet or cast insulating materials used as Type-1 barrier should meet the requirements for class 94-HB as set forth in ANSI/UL 94-1985 or those set forth in Method II of ASTM D 229-1986.

A4.1.4.3 Substitute flame-resistant applied insulation (such as fluidized bed systems, tape systems, or shrinkable-type tubing) should pass the tests specified in 5.2.7, Flame-Resistance Tests for Applied Insulation, in ANSI/IEEE C37.20.2-1987.

A4.1.5 Tracking Resistance. Substitute bus support insulation, Type-2 barrier insulation, entrance bushings, and circuit breaker primary disconnects should pass the inclined plane tracking test in accordance with ASTM D 2303-1990 using one time-to-track method with an applied voltage of 2.5 kV. The minimum acceptable time to failure should be 20 minutes for equipment rated at 5 kV or less and 300 minutes for equipment rated greater than 5 kV.

A4.1.6 Volume Resistivity or Loss Index. For drawout switch primary disconnects, the electrical losses of a substitute material will be judged acceptable, provided either the volume resistivity (ASTM D 257-1990) is greater than (or the loss index [ASTM D 150-1987] is less than) or equal to that of the previously acceptable material.

A4.1.7 Deflection Capability or Flexural Strength

A4.1.7.1 Bus Insulation. If it is desired to substitute another insulating material for the one used in the momentary current test, the substitute material will be considered to have adequate deflection capability if it provides equivalent or greater performance as shown by testing in accordance with the deflection test of A5.2.

A4.1.7.2 Entrance Bushings. A substitute bushing for the one used in the momentary current test is considered to have adequate deflection capability if the substitute has equivalent strength as shown by testing in accordance with the deflection test of A5.3.

A4.1.7.3 Drawout Switch Primary Disconnects. A substitute material for use in the same design will be considered to have adequate flexural strength if its flexural strength (ASTM D 790-1990) equals or exceeds the value of the original material.

Copyright National Electrical Manufacturers Association
Provided by IHS under license with NEMA
No reproduction or networking permitted without license from IHS
Not for Resale

Table A1
Relative Thermal Indexes and Insulating Functions

	Relative Thermal Index		
	Electrical	Mechanical without impact	Mechanical with impact
Bus	X		X
Bus joint	X		
Bus tap	X		X
Bus support	X		X
Barriers Type 1	X	X	
Type 2	X		X
Entrance bushings	X		X
Drawout switch primary discounts	X		X

A4.1.8 Impact Strength

A4.1.8.1 Bus Insulation. If it is desired to substitute another insulating material for the one used in the momentary current test, the substitute material will be considered to have adequate impact strength if its impact strength as measured by the falling ball impact test (ASTM D 3029-1984) equals or exceeds the impact strength of the original material.

A4.1.8.2 Bus Support Insulation, Type-2 Barriers, and Drawout Switch Primary Disconnects. If it is desired to substitute another insulating material for the one used in the momentary current test, the substitute material will be considered to have adequate impact strength if its notched Izod impact strength as measured by the test method in ASTM D 256-1990 equals or exceeds the impact strength of the original material.

A4.1.9 Creep Resistance

A4.1.9.1 Bus and Bus Tap Insulation. If this property is judged to represent a potential problem in a specific design, it should be given special consideration when evaluating a substitute material.

A4.1.9.2 Drawout Switch Primary Disconnects. A substitute material will be judged to have acceptable creep resistance, provided a bar with a 4-inch span loaded to 1000 psi maximum stress and tested at 105°C for 24 hours has equal or less creep than the original material. The specimen supports, deflection measuring device, and the weight necessary to obtain a maximum fiber stress of 1000 psi are adequately described in ASTM D 648-1982 (1988).

A4.1.10 Recognized Materials. Substitute materials recognized as NEMA Grade GPO-3, as described in NEMA LI 1-1983, paragraph LI 1-5.07 through LI 1-15.15, and having thermal index in accordance with NEMA LI 6-1983 should be considered to be suitable for replacement of GPO-3 Type-1 or Type-2 barriers or bus support insulation without further testing. Materials recognized as NEMA grade GPO-2 should also be considered to be suitable for replacement of GPO-2 Type-1 or Type-2 or bus support insulation without further testing.

A4.2 Ceramic Insulation Deflection Capability, Impact Strength, and Compressive Strength. A substitute bushing or disconnect for the one used in the momentary current test is considered to have adequate capabilities if the substitute has equivalent cantilever strength as shown by testing in accordance with the deflection test of A5.3.

A4.3 Indoor Apparatus Insulators. A special class of bus support insulators, indoor apparatus insulators, is available in both ceramic and nonceramic varieties. These insulators are defined and described in paragraph SG6-31.3 of NEMA SG 6-1974.

If an indoor apparatus insulator of a particular voltage and strength class (e.g., 15 kV, A20) has been qualified by testing, another insulator recognized as being of the same voltage and strength class may be substituted without further dielectric or mechanical testing. If the substitute insulator is not ceramic, it must meet the requirements stated in 5.1.1, 5.1.4, and 5.1.5 for flammability, resistance to long-term aging, and tracking resistance.

Insulators having the same height, electrical properties, and strength as indoor apparatus insulators described in NEMA SG 6-1974 but differing in such properties as size, number, and location of bolt holes or diameter of insulating column, may be substituted for each other in accordance with the above rules.

A4.4 Composite Insulating Systems. It is recognized that a single insulating function may be performed by a composite insulating system consisting of several insulating materials. When it is desired to substitute a different material for one or more of the materials in a composite insulating system, it should be determined which properties are required of each

Copyright National Electrical Manufacturers Association
Provided by IHS under license with NEMA
No reproduction or networking permitted without license from IHS
Not for Resale

APPENDIX

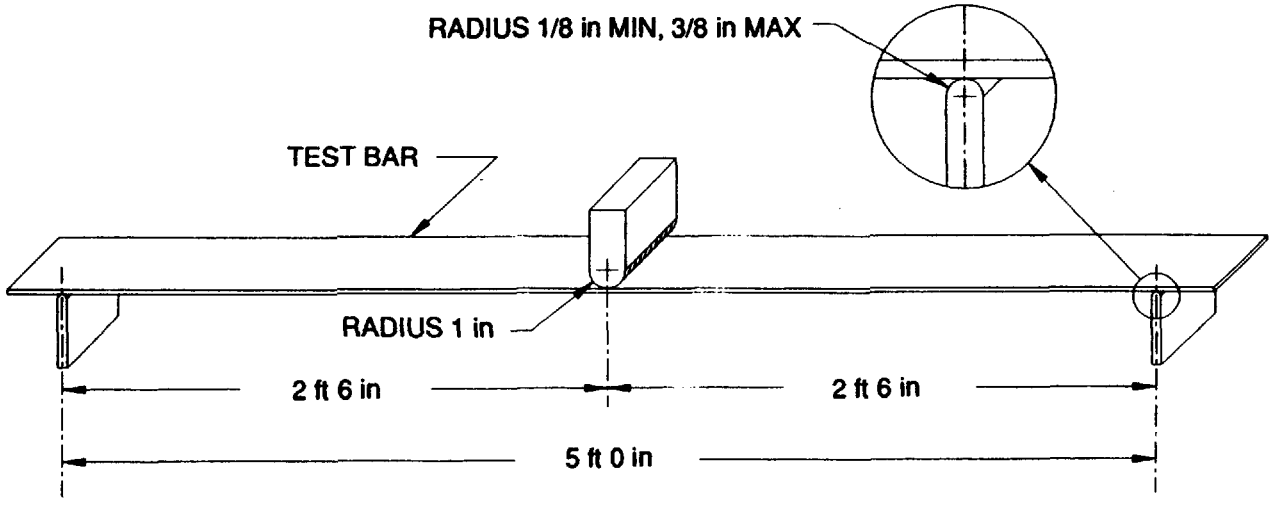

Figure A1 – Bus Insulation Deflection Test Apparatus

material in the composite system. Only those properties required of the material being replaced should be required to be evaluated in accordance with this guide.

A5. Tests

Most of the tests required under this guide are detailed in other standards, which are referenced under the requirements for each type and function of insulation in Section A4 of this guide. Tests that are not described elsewhere are described in A5.1 through A5.3 and are referenced in the appropriate portions of Section A4.

A5.1 Thermal Cycling Withstand. Substitute insulation applied to conductors by dipping, moulding, fluidized bed coating, or other processes that cause the insulation to adhere to the conductor, must not be damaged by variations in temperature. Test bars with insulation applied of both original and substitute material should be subjected to a thermal cycling test consisting of ten cycles of alternate heat and cold. Each cycle should consist of four parts, as follows:

(1) Soak in a cold chamber at -30°C or lower for a minimum of 8 hours.

(2) Remove from cold chamber and allow to stand at room temperature for 2 hours.

(3) Place in oven at 105°C or above for 4 hours.

(4) Remove from oven and allow to stand at room temperature for 2 hours.

After the tenth cycle is completed, the substitute insulation should be as free of cracking or other physical damage as the original material.

A5.2 Deflection Capability–Bus Insulation. Copper bars with a minimum length of 1/4 inch × 4 inches × 5 feet 6 inches, or aluminum bars with a minimum length of 3/8 inch × 4 inches × 5 feet 6 inches, should be covered with the insulating material to be investigated and the original material. The tests should be made on the conductor material being used in the equipment. If both conductor materials are used, both must be tested. The test bars should be supported on two cylindrical supports having a minimum radius of 1/8 inch and a maximum radius of 3/8 inch and spaced 5 feet 0 inches apart. A cylindrical loading nose having a radius of 1 inch should be applied at the center of the 5-foot 0-inch span (see Figure A1) with sufficient force to deflect the test specimen 2 inches at the rate of 2 to 4 inches per minute.[6] The force should then be removed at the same rate and the test specimen allowed to return to its normal position. The test specimen should then be turned over and similarly deflected in the opposite direction. It should be thus deflected five times in each direction, following which the center 1 foot of the specimen should pass a test for bus bar insulation in accordance with 5.2.1.3 of ANSI/IEEE C37.20.2-1987 (foil test).

A5.3 Deflection Capability – Bushings. The bushing should be rigidly mounted with load applied normal to the longitudinal axis of the bushing and at the midpoint of the thread or threaded teminals and at the terminal plate on bushings so equipped. Tests should be applied to the inner and outer terminals of the bushing but not simultaneously.

The specified load should be applied for a period of 1 minute. After the load has been removed for 1 minute, the permanent deformation, measured at the inner end, should not be greater than the deformation of the bushing used in the momentary test.

[6] If 2 inches is too great a deflection for the original qualified material to withstand, the maximum deflection should be reduced accordingly to provide a comparative test. The substitute material should provide equivalent or greater performance.

Copyright National Electrical Manufacturers Association
Provided by IHS under license with NEMA
No reproduction or networking permitted without license from IHS
Not for Resale

Appendix B

Guide for Methods of Power-Factor Measurement for Low-Voltage Inductive Test Circuits

ANSI/IEEE C37.26-1972 has been withdrawn as an American National Standard (pending review or reaffirmation), but is reproduced in this Appendix to aid in the completion of the requirements of ANSI C37.57-1990.

1. Scope

This standard describes three methods used to measure the power factor in 60 Hz inductive low-voltage (1000 volts and below) test circuits. Similar methods may apply at other frequencies. These methods are:

(1) Ratio method
(2) dc decrement method
(3) Phase relationship method

These preferred methods are shown in Table 1.

2. Purpose

The purpose of this standard is to recommend methods of measuring power factor for inductive test circuits by such means as oscillographic records, so that the preferred method, giving the greatest accuracy, is recommended for any particular circuit.

3. Definitions

The definitions and terms contained in this document or in other American National Standards referred to in this document, are not intended to embrace all legitimate meanings of the terms. They are applicable only to the subject treated in this standard.

For additional definitions of terms used in this standard, refer to American National Standard Definitions for Power Switchgear, C37.100-1972.

4. Ratio Method

4.1 General. Devices such as current-limiting fuses, fused circuit breakers, and similar fast clearing devices may have total interrupting times of 0.5 cycle or less. The ratio method permits measurement to be made within the operating time of these devices and generally

Table 1
Preferred Methods of Power Factor Measurement for Low-Voltage Inductive Test Circuits (See Note 1)

Test Circuit Current Range (rms symmetrical)	Interrupting Time on Test Device (Cycles)	Circuit Power Factor	
		0-30 Percent	Above 30 Percent
20 kA and below	0.5 or less	Ratio Method	Phase relationship method
	Above 0.5	dc Decrement Method	
Above 20 kA to 130 kA, inclusive	0.5 or less	Ratio Method	–
	Above 0.5	dc Decrement Method	
Above 130 kA	Any	Ratio Method (Note 2)	–

Notes:

(1) Table 1 applies to single-phase or three-phase test circuit, 60 Hz.
(2) For circuits above 130 kA, where asymmetrical closing conditions may jeopardize equipment or instrumentation, the phase relationship may be used.

Copyright National Electrical Manufacturers Association
Provided by IHS under license with NEMA
No reproduction or networking permitted without license from IHS
Not for Resale

is not suitable on circuits with power factors above 30 percent.

Since this method requires closing the circuit to produce maximum current asymmetry, the resulting high mechanical forces on bus supports and circuit components may jeopardize the test equipment or instrumentation. When there is a question of jeopardy, the phase relationship method may be used.

4.2 Procedure for Determining Power Factor. The power factor is determined at an instant one-half cycle (based on the fundamental frequency timing wave) after the initiation of current flow by determining the asymmetrical and symmetrical currents at this point. (See Figs. 1 and 2, and Table 2.) Both total rms asymmetrical current and rms symmetrical current are to be measured and the ratio M_A or M_M calculated as follows: Construct the envelope of the wave as shown in Fig. 1. The rms symmetrical and rms asymmetrical currents shall be determined as indicated in the equations of Fig. 1. Having determined these values, the M_A for three-phase circuits and M_M for single-phase circuits are determined from the following:

$$\text{Ratio } M_A \text{ (for Three-Phase Tests)} \quad \frac{\text{Average of the rms Asymmetrical Current in the Phases}}{\text{Average of the rms Symmetrical Current in the Phases}}$$

$$\text{Ratio } M_M \text{ (for Single-Phase Tests)} \quad \frac{\text{rms Asymmetrical Current}}{\text{rms Symmetrical Current}}$$

Fig. 1
Ratio Method

A' = major ordinate

B' = minor ordinate

A = peak-to-peak value of alternating component $= A' + B'$

D = dc component $= A' - \frac{A}{2}$

I = rms symmetrical current $= \frac{A' + B'}{2.828} = \frac{A}{2.828}$

I' = rms asymmetrical current $= \sqrt{\left(\frac{A}{2.828}\right)^2 + D^2}$

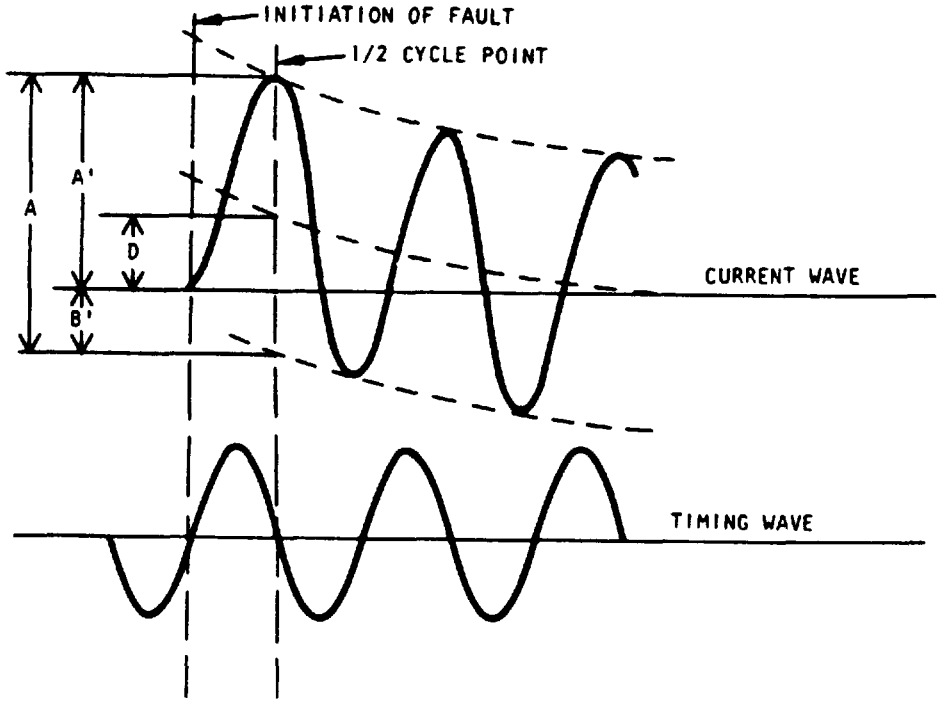

Copyright National Electrical Manufacturers Association
Provided by IHS under license with NEMA
No reproduction or networking permitted without license from IHS
Not for Resale

Refer to Fig. 2 or Table 2 to determine the power factor of the test circuit.

5. DC Decrement Method

5.1 General. This method is recommended for circuits of 30 percent power factor or less where the device to be tested interrupts at a point in time more than one-half cycle from the initiation of the current. This method relates power factor to the rate of decay of the dc component. The current measuring method used should not introduce distortion into the dc component. Use noninductive shunts since current transformers may introduce significant error.

5.2 Procedure for Determining Power Factor. The power factor may be determined from the curve of the dc component of the asymmetrical current wave. See Fig. 3.

5.2.1 The equation for the dc component is:

$$i_d = I_{d0}\, e^{-(Rt/L)}$$

where

i_d = value of the dc component at time t
I_{d0} = initial value of the dc component
L/R = time constant of the circuit in seconds
t = time interval, in seconds, between i_d and I_{d0}
e = base of Napierian logarithms (2.7183)

Fig. 2
Multiplying Factor vs Power Factor

$$M_A = \frac{\text{Average of the rms Asymmetrical Current in the Phases}}{\text{Average of the rms Symmetrical Current in the Phases}}$$

$$M_M = \frac{\text{rms Asymmetrical Current}}{\text{rms Symmetrical Current}}$$

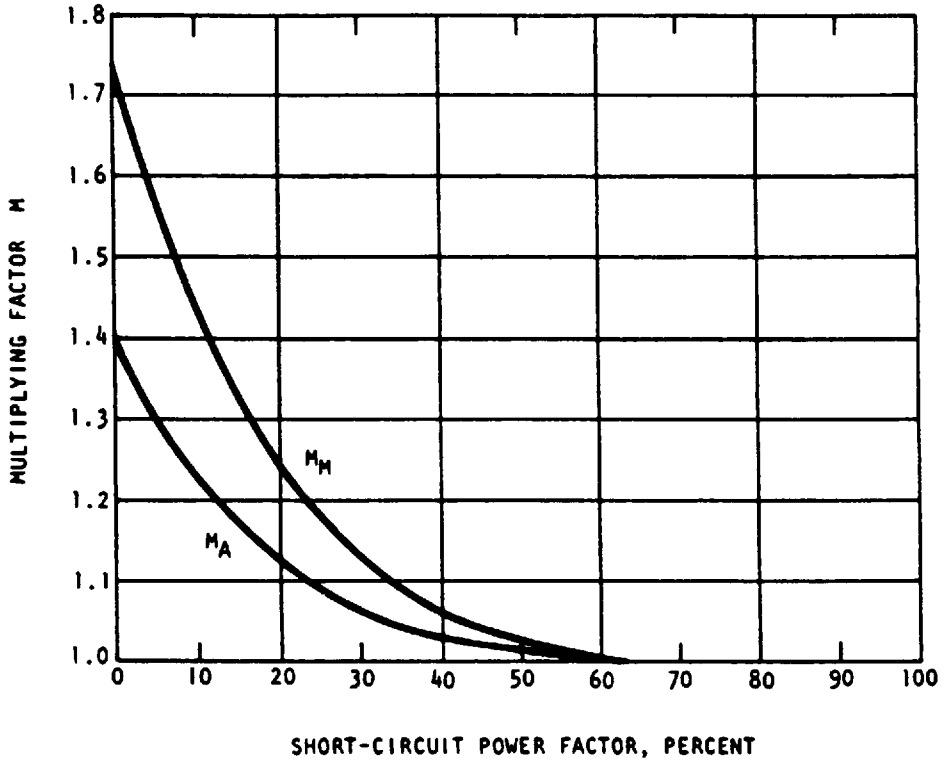

Copyright National Electrical Manufacturers Association
Provided by IHS under license with NEMA
No reproduction or networking permitted without license from IHS
Not for Resale

APPENDIX

Multiplying Factors

Table 2

Power Factor Percent	X/R Ratio	Multiplying Factor: Maximum Single Phase rms Current at ½ Cycle (Curve M_M)	Multiplying Factor: Average Three Phase rms Current at ½ Cycle (Curve M_A)	Power Factor Percent	X/R Ratio	Multiplying Factor: Maximum Single Phase rms Current at ½ Cycle (Curve M_M)	Multiplying Factor: Average Three Phase rms Current at ½ Cycle (Curve M_A)
0	∞	1.732	1.394	29	3.3001	1.139	1.070
1	100.00	1.696	1.374	30	3.1798	1.130	1.066
2	49.993	1.665	1.355	31	3.0669	1.121	1.062
3	33.322	1.630	1.336	32	2.9608	1.113	1.057
4	24.979	1.598	1.318	33	2.8606	1.105	1.053
5	19.974	1.568	1.301	34	2.7660	1.098	1.049
6	16.623	1.540	1.285	35	2.6764	1.091	1.046
7	14.251	1.511	1.270	36	2.5916	1.084	1.043
8	12.460	1.485	1.256	37	2.5109	1.078	1.039
8.5	11.723	1.473	1.248	38	2.4341	1.073	1.036
9	11.066	1.460	1.241	39	2.3611	1.068	1.033
10	9.9501	1.436	1.229	40	2.2913	1.062	1.031
11	9.0354	1.413	1.216	41	2.2246	1.057	1.028
12	8.2733	1.391	1.204	42	2.1608	1.053	1.026
13	7.6271	1.372	1.193	43	2.0996	1.049	1.024
14	7.0721	1.350	1.182	44	2.0409	1.045	1.022
15	6.5912	1.330	1.171	45	1.9845	1.041	1.020
16	6.1695	1.312	1.161	46	1.9303	1.038	1.019
17	5.7967	1.294	1.152	47	1.8780	1.034	1.017
18	5.4649	1.277	1.143	48	1.8277	1.031	1.016
19	5.1672	1.262	1.135	49	1.7791	1.029	1.014
20	4.8990	1.247	1.127	50	1.7321	1.026	1.013
21	4.6557	1.232	1.119	55	1.5185	1.015	1.008
22	4.4341	1.218	1.112	60	1.3333	1.009	1.004
23	4.2313	1.205	1.105	65	1.1691	1.004	1.002
24	4.0450	1.192	1.099	70	1.0202	1.002	1.001
25	3.8730	1.181	1.093	75	0.8819	1.0008	1.0004
26	3.7138	1.170	1.087	80	0.7500	1.0002	1.00005
27	3.5661	1.159	1.081	85	0.6128	1.00004	1.00002
28	3.4286	1.149	1.075	100	0.0000	1.00000	1.00000

The time constant L/R can be ascertained from the above formula as follows:

(1) Measure the value of I_{d0} at the time of current initiation and the value of i_d at any other time t

(2) Determine the value of $e^{-Rt/L}$ by dividing i_d by I_{d0}

(3) From a table of values of e^{-x} determine the value of $-x$ corresponding to the ratio i_d/I_{d0}

(4) The value x then represents Rt/L, from which L/R is determined

5.2.2 Determine the angle ϕ from:

$$\phi = \arctan(\omega L/R)$$

where

ω = 2 π times the actual frequency

5.2.3 Power Factor = $\cos \phi$

6. Phase Relationship Method

6.1 General. Methods dependent upon asymmetrical values of current or the decay of the dc component generally are not suitable

Copyright National Electrical Manufacturers Association
Provided by IHS under license with NEMA
No reproduction or networking permitted without license from IHS
Not for Resale

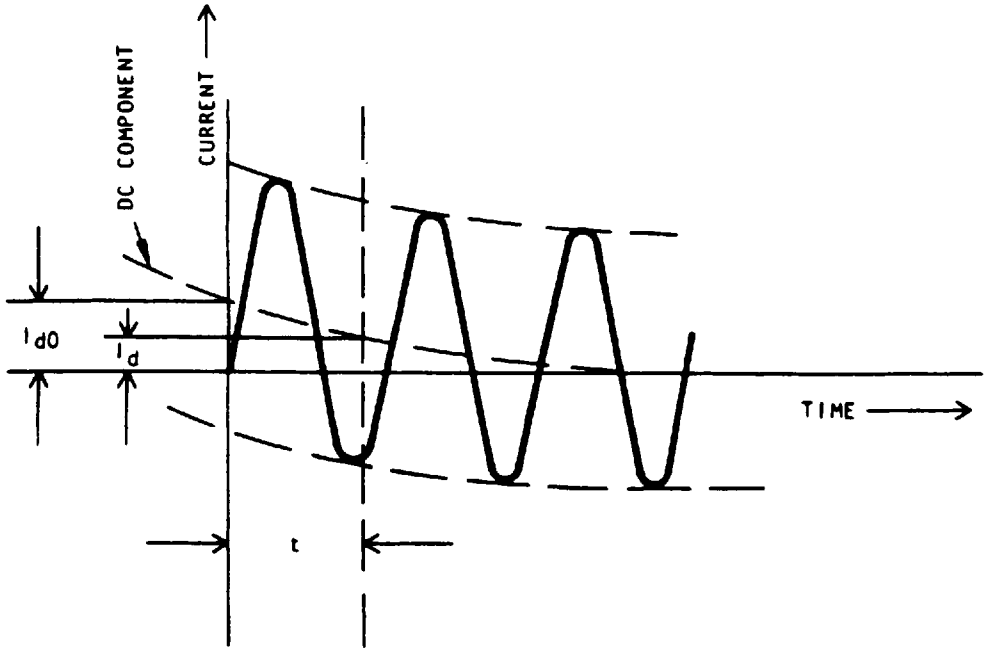

Fig. 3
DC Decrement Method

for the measurement of power factor circuits above 30 percent where the dc component is severely reduced. Therefore, the phase relationship method, using current and voltage waves, is the recommended method on circuits having power factors over 30 percent.

6.2 Procedure for Determining Power Factor. This method involves controlled closing and determines the power factor of the test circuit under essentially symmetrical closing conditions. Construct suitable straight, parallel wave envelope lines and a line midway between them to determine the "zero point" of the "true" axis of the current wave at the end of the first major half cycle. By relating this point to the open circuit voltage wave "zero point," the power factor can be determined from the difference in electrical degrees between the "zero point" of the current at the end of the first major half cycle and the corresponding "zero point" position of the circuit voltage wave. For three-phase circuits, each phase current must be related to its own phase-to-neutral voltage. Greater accuracy will result if each power factor is determined when the circuit is closed so that the phase under consideration has symmetrical characteristics. The average of the phase power factors is considered as the circuit power factor. If the voltage wave is subject to measurable phase shift upon closure of the test circuit (as shown in Fig. 4), it is necessary to determine and use the voltage zero (0) point which would have existed (indicated dash line) if the phase shift in the voltage wave had not occurred.

7. References

[1] *NEMA Standard for Molded Case Circuit Breakers*, Publication AB 1-1969.

[2] *IEC Specification for Alternating-Current Circuit Breakers*, IEC Publication 56-1-1971.

[3] Underwriters' Laboratories, Inc. *High-Interrupting-Capacity Fuses; Current-Limiting Types*, UL198.2-1970.

[4] Harder, J. E. A method of power factor measurement for circuit interrupter testing. *IEEE Transactions on Power Apparatus and Systems*, vol PAS-87, no 10, Oct 1968, TP21 PWR.

Copyright National Electrical Manufacturers Association
Provided by IHS under license with NEMA
No reproduction or networking permitted without license from IHS
Not for Resale

APPENDIX

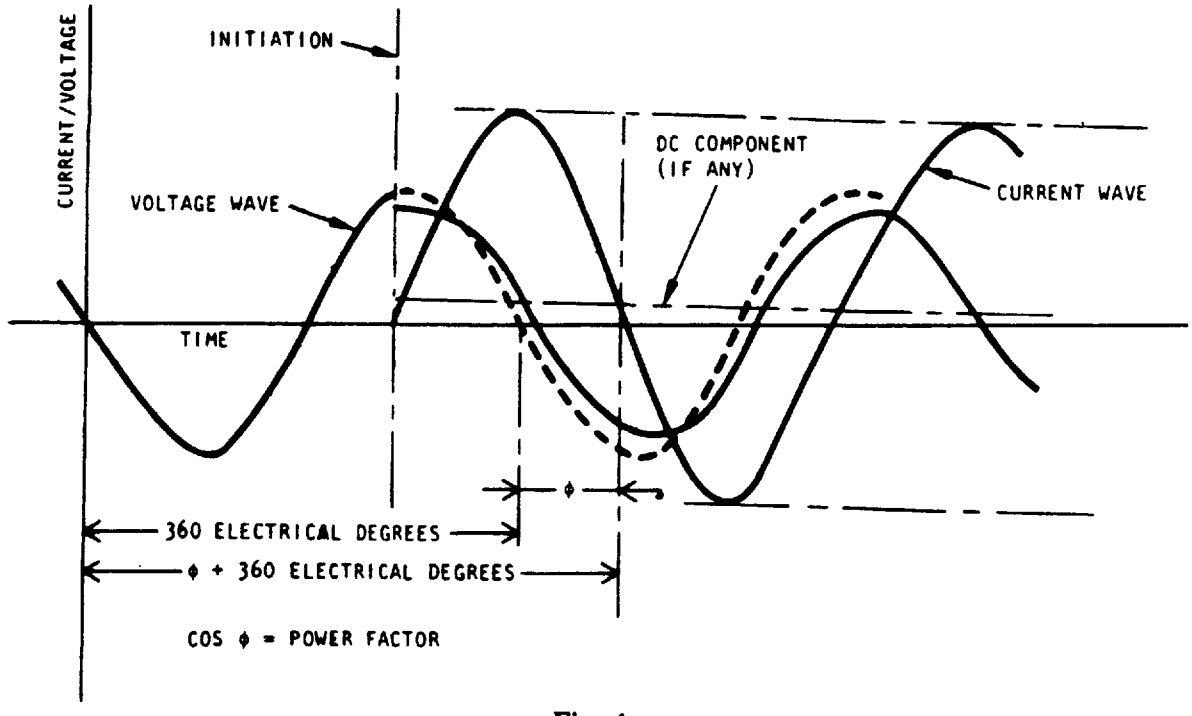

Fig. 4
Phase Relationship Method

[5] Farquhar, W. A.; Schall, G. E.; Plate, G. H. *Comparison of Power Factor Measurement Methods.* Presented at IEEE Winter Power Meeting, New York, N. Y., Jan 29, 1968, 68CP168-PWR.

[6] Brandt, T. F., Jr. *Test Procedure for Determining Short-Circuit Power Factor.* Presented at IEEE Winter Power Meeting New York, N. Y., Jan 29, 1968, 68CP20-PWR.

[7] Withers, J. S. *Ammeter-Voltmeter-Wattmeter Method of Determining Short-Circuit Power Factor in a Short-Circuit Laboratory.* Presented at IEEE Winter Power Meeting, New York, N. Y., Jan 29, 1968, 68CP82-PWR.

Copyright National Electrical Manufacturers Association
Provided by IHS under license with NEMA
No reproduction or networking permitted without license from IHS
Not for Resale