STD.NEMA C37.55-ENGL 1989 ■ 6470247 0522251 835 ■

AMERICAN NATIONAL STANDARD

American National Standard

ANSI C37.55-1989 (R1996)

American National Standard

Switchgear Metal Clad Switchgear Assemblies— Conformance Test Procedure

NATIONAL ELECTRICAL MANUFACTURERS ASSOCIATION
1300 NORTH 17TH STREET, SUITE 1847, ROSSLYN, VA 22209
(703) 841-3200 FAX: (703) 841-3300

Copyright National Electrical Manufacturers Association
Provided by IHS under license with NEMA
No reproduction or networking permitted without license from IHS
Not for Resale

ANSI ®
C37.55-1989

American National Standard
for Switchgear –

Metal-Clad Switchgear Assemblies – Conformance Test Procedures

Secretariat

Institute of Electrical and Electronics Engineers
National Electrical Manufacturers Association

Approved November 17, 1988

American National Standards Institute, Inc

Copyright National Electrical Manufacturers Association
Provided by IHS under license with NEMA
No reproduction or networking permitted without license from IHS

Not for Resale

American National Standard

Approval of an American National Standard requires verification by ANSI that the requirements for due process, consensus, and other criteria for approval have been met by the standards developer.

Consensus is established when, in the judgment of the ANSI Board of Standards Review, substantial agreement has been reached by directly and materially affected interests. Substantial agreement means much more than a simple majority, but not necessarily unanimity. Consensus requires that all views and objections be considered, and that a concerted effort be made toward their resolution.

The use of American National Standards is completely voluntary; their existence does not in any respect preclude anyone, whether he has approved the standards or not, from manufacturing, marketing, purchasing, or using products, processes, or procedures not conforming to the standards.

The American National Standards Institute does not develop standards and will in no circumstances give an interpretation of any American National Standard. Moreover, no person shall have the right or authority to issue an interpretation of an American National Standard in the name of the American National Standards Institute. Requests for interpretations shall be addressed to the secretariat or sponsor whose name appears on the title page of this standard.

CAUTION NOTICE: This American National Standard may be revised or withdrawn at any time. The procedures of the American National Standards Institute require that action be taken to reaffirm, revise, or withdraw this standard no later than five years from the date of approval. Purchasers of American National Standards may receive current information on all standards by calling or writing the American National Standards Institute.

Published by

National Electrical Manufacturers Association
1300 N. 17th Street, Rosslyn, Virginia 22209

Copyright © 2000 National Electrical Manufacturers Association
All rights reserved.

No part of this publication may be reproduced in any form, in an electronic retrieval system or otherwise, without prior written permission of the publisher.

Printed in the United States of America

Copyright National Electrical Manufacturers Association
Provided by IHS under license with NEMA
No reproduction or networking permitted without license from IHS

Not for Resale

Foreword

(This Foreword is not part of American National Standard C37.55-1989.)

This standard has been developed to describe selected tests and procedures to demonstrate conformance in accordance with Section 5, Tests, of American National Standard for Metal-Clad and Station-Type Cubicle Switchgear, ANSI/IEEE C37.20.2-1987. It is being published separately from ANSI/IEEE C37.20.2-1987 to facilitate its use and to permit timely revisions based on experience.

This standard is one of several in a series of test procedures for conformance testing of switchgear products. While this standard is written for general guidance, performance criteria are established so that this standard can be adopted as the basis for certification of metal-clad switchgear for use in nonutility installations subject to regulation by public authorities and similar agencies concerned with laws, ordinances, regulations, administrative orders, and similar instruments.

This standard has been prepared by a Working Group sponsored by the Power Switchgear Assemblies Technical Committee of the Switchgear Section of the National Electrical Manufacturers Association (NEMA 8SGV). During the course of its preparation, coordination has been maintained with the High-Voltage Power Circuit Breaker Technical Committee of the Switchgear Section of the National Electrical Manufacturers Association, NEMA 8SGIV. Reports of progress were also made at regular intervals to the following organizations:

(1) The High-Voltage Apparatus Coordinating Committee of the Electrical and Electronics Standards Management Board of the American National Standards Institute

(2) The Switchgear Committee of the Power Engineering Society of the Institute of Electrical and Electronics Engineers

Through this joint effort over many years, the switchgear assemblies standards have been of extreme value to the industry. Suggestions for improvement of this standard will be welcome. They should be sent to the National Electrical Manufacturers Association, 2101 L Street, NW, Washington, DC 20037.

This standard was processed and approved for submittal to ANSI by Accredited Standards Committee on Power Switchgear, C37. Committee approval of the standard does not necessarily imply that all committee members voted for its approval. At the time it approved this standard, the C37 Committee had the following members:

W. E. Laubach, Chair
A. K. McCabe, Executive Vice-Chair, High-Voltage Standards
S. H. Telander, Executive Vice-Chair, Low-Voltage Standards
D. L. Swindler, Executive Vice-Chair, International Electrotechnical Commission Activities
C. H. White, Secretary
M. B. Williams, Program Administrator

Organization Represented	*Name of Representative*
Association of Iron and Steel Engineers	J. M. Tillman
Electric Light and Power Group	R. L. Capra
	D. A. Ditzler
	K. D. Hendrix
	J. H. Provanzana
	D. T. Weston
	G. R. Brandenberger (Alt)
	T. E. Bruck (Alt)
	D. E. Soffrin (Alt)

Copyright National Electrical Manufacturers Association
Provided by IHS under license with NEMA
No reproduction or networking permitted without license from IHS
Not for Resale

Organization Represented	*Name of Representative*
Institute of Electrical and Electronics Engineers	W. F. Hoenigmann
	D. M. Larson
	H. W. Mikulecky
	E. W. Schmunk
	C. A. Schwalbe
	S. C. Atkinson (Alt)
	D. G. Kumbera (Alt)
National Electrical Manufacturers Association	R. A. McMaster
	R. O. D. Whitt
Tennessee Valley Authority	(Representation vacant)
Testing Laboratory Group	L. Frier
	W. T. O'Grady
	R. W. Seelbach (Alt)
U.S. Department of Agriculture	H. L. Bowles
U.S. Department of the Army	W. M. Jones
U.S. Department of the Interior – Bureau of Reclamation	J. W. Reif
U.S. Department of the Navy – Naval Construction Battalion Center	R. L. Clark
Western Area Power Authority	G. D. Birney

The members of the HVACC/NEMA 8SGV Working Group at the time of development were:

S. H. Telander, Chair
C. H. White, Secretary

M. Boyle
M. J. Shepnew
B. Bridger

This standard was reviewed and recommended for submittal to Accredited Standards Committee on Power Switchgear, C37, by Subcommittee II (High-Voltage Switchgear) of the High-Voltage Apparatus Coordinating Committee. The members of Subcommittee II at the time of review in 1981 were:

R. B. Shores, Chair
E. J. Huber, Secretary

R. H. Arndt
R. Bennett
J. H. Boerger
B. Bridger
F. L. Cameron
D. B. Cole
P. W. Dwyer
R. A. Few
J. D. Finley
J. Fox
A. J. G. Kalvaitis
W. E. Laubach
P. C. Lyons
G. O. Perkins
E. Rapske
R. W. Seelbach
M. J. Shepnew
D. L. Swindler
S. H. Telander

The members of the NEMA 8SGV Technical Committee at the time of adoption were:

S. H. Telander, Chairman
C. H. White, Secretary

P. Clickner
H. Keating
W. E. Laubach
S. Roberts
G. Stakats
D. L. Swindler
A. Tomeo
C. Welter

Copyright National Electrical Manufacturers Association
Provided by IHS under license with NEMA
No reproduction or networking permitted without license from IHS
Not for Resale

Contents

SECTION PAGE

1. Scope 6

2. Referenced and Related Standards 6
   2.1 Referenced American National Standards 6
   2.2 Related Standards 7

3. Definitions 7
   3.1 Design Tests 7
   3.2 Production Tests 7
   3.3 Conformance Tests 8

4. General Test Conditions 8
   4.1 Ambient Conditions 8
   4.2 Protection and Conditions – Control and Instrumentation 8

5. Conformance Test Requirements 8
   5.1 General 8
   5.2 Test Requirements 8
   5.3 Test Arrangements 8
   5.4 Commonalities of Designs and Tests 9
   5.5 Dielectric Tests 10
   5.6 Mechanical Performance Tests 12
   5.7 Continuous Current Test 13
   5.8 Short-Time Current Withstand Test 16
   5.9 Momentary Current Withstand Test 16

6. MC Switchgear Components 17
   6.1 Accessory Devices 17
   6.2 Bus Bar Structures 17
   6.3 Isolating Switches 18
   6.4 Drawout Interrupter Switches 18

7. Enclosure Conformance Tests 18

8. Treatment of Failures 18

9. Production Tests 18
   9.1 Low-Frequency Withstand Voltage Tests 18
   9.2 Mechanical Operation Tests 18
   9.3 Grounding of Instrument Transformer Cases Test 19
   9.4 Electrical Operation and Wiring Tests 19

10. Retesting 19

Tables
   Table 1 Representative Test Arrangements 9
   Table 2 Typical Examples of Choosing Representative Test Arrangements 10
   Table 3 Copper Conductors for Connection to the Main Bus for Use in Continuous Current Tests 15
   Table 4 Copper Conductors for Connection to Feeder-Circuit-Breaker Outgoing Terminals or Extensions for Use in Continuous Current Tests 15

Copyright National Electrical Manufacturers Association
Provided by IHS under license with NEMA
No reproduction or networking permitted without license from IHS
Not for Resale

SECTION PAGE

Appendix Conformance Guide for Evaluation of Changes Made in Insulating Materials and Systems 20
A1. Scope 20
A2. Purpose 20
A3. Definitions 20
A4. Requirements 21
A5. Tests 23

Table A1 Relative Thermal Indexes and Insulating Functions 21

Figure A1 Bus-Insulation Deflection Test Apparatus 24

Copyright National Electrical Manufacturers Association
Provided by IHS under license with NEMA
No reproduction or networking permitted without license from IHS
Not for Resale

American National Standard
for Switchgear –

Metal-Clad Switchgear Assemblies – Conformance Test Procedures

1. Scope

This standard is a conformance-testing standard optionally applicable to all metal-clad switchgear assemblies designed, tested, and manufactured in accordance with American National Standard for Metal-Clad and Station-Type Cubicle Switchgear, ANSI/IEEE C37.20.2-1987. This standard covers selected tests to demonstrate conformance with Section 5, Tests, of ANSI/IEEE C37.20.2-1987. The requirements of ANSI/IEEE C37.20.2-1987 are sufficient for application of metal-clad switchgear assemblies, and conformance testing is not necessary to satisfy the basic requirements of ANSI/IEEE C37.20.2-1987. Conformance testing is performed to show compliance with the basic requirements when it is required to satisfy special agreements or regulatory agency requirements. Conformance testing may be performed in association with the basic design testing if such testing is agreeable to those concerned; however, conformance testing is more likely to be performed some time after original development to satisfy a specific need. Conformance testing need not be performed if not required.

MC (metal-clad) switchgear assemblies usually include control and instrumentation components unique for the application that are not individually evaluated under this standard. However, these components, when utilized in circuits that obtain their energy from primary sources within the MC switchgear, must be suitably protected in accordance with 4.2.

NOTE: In this standard, the use of the term "MC switchgear" shall be considered to mean "metal-clad switchgear." The use of the term "circuit breaker" shall be considered to mean "indoor alternating-current high-voltage circuit breakers rated above 1000 volts applied as removable elements in metal-enclosed switchgear assemblies," unless qualified by other descriptive terms.

This standard does not cover equipment intended for use in installations under the exclusive control of electric utilities for the purposes of communication or metering, or for generation, control, transformation, transmission, and distribution of electric energy located in buildings used exclusively by utilities for such purposes, or located outdoors on property owned or leased by the utility or on public highways, streets, roads, and the like, or located outdoors by established rights on private property.

This standard specifies the tests that shall be performed to demonstrate that the MC switchgear being tested conforms with the ratings assigned to it and meets the mechanical and electrical performance requirements specified in ANSI/IEEE C37.20.2-1987.

2. Referenced and Related Standards

When there is a conflict between this standard and these referenced or related standards, this standard shall apply.

2.1 Referenced American National Standards. This standard is intended to be used in conjunction with the following American National Standards. When these referenced standards are superseded by a revision approved by the American National Standards Institute, Inc, the revision shall apply.

ANSI C37.54-1987, Switchgear – Indoor Alternating-Current High-Voltage Circuit Breakers Applied as Removable Elements in Metal-Enclosed Switchgear Assemblies – Conformance Test Procedures

ANSI C37.57, Switchgear — Metal-Enclosed Interrupter Switchgear Assemblies — Conformance Test Procedures[1]

ANSI C37.58, Switchgear — Indoor Medium-Voltage Switches for Use in Metal-Enclosed Switchgear — Conformance Test Procedures[1]

ANSI/IEEE 4-1978, Standard Techniques for High-Voltage Testing

[1] This standard is currently under development. Contact the Secretariat for more recent information.

Copyright National Electrical Manufacturers Association
Provided by IHS under license with NEMA
No reproduction or networking permitted without license from IHS
Not for Resale

ANSI/IEEE C37.04-1979 (R1989), C37.04c-1982, C37.04e-1985, C37.04g-1988, C37.04h-1988, Rating Structure for AC High-Voltage Circuit Breakers Rated on a Symmetrical Current Basis

ANSI/IEEE C37.09-1979 (R1989), C37.09c-1984, and C37.09e-1985, Test Procedure for AC High-Voltage Circuit Breakers Rated on a Symmetrical Current Basis

ANSI/IEEE C37.20.2-1987, Metal-Clad and Station-Type Cubicle Switchgear

2.2 Related Standards. The following standards are listed for information only and are not essential to complete the requirements of this standard.

ANSI C37.06-1987 and C37.06a-1989, Switchgear – AC High-Voltage Circuit Breakers Rated on a Symmetrical Current Basis – Preferred Ratings and Related Required Capabilities

ANSI C37.51-1989, Switchgear – Metal-Enclosed Low-Voltage AC Power-Circuit-Breaker Switchgear Assemblies – Conformance Test Procedures (the Appendix contains a reprint of ANSI/IEEE C37.26-1972, Guide for Methods of Power-Factor Measurement for Low-Voltage Inductive Test Circuits)

ANSI/IEEE 100-1988, Standard Dictionary of Electrical and Electronics Terms

ANSI/IEEE C37.20.4, Indoor AC Medium Voltage Switches for Use in Metal-Enclosed Switchgear Assemblies[1]

ANSI/IEEE C37.100-1981 (R1989) and C37.100b-1985, Definitions for Power Switchgear

ANSI/UL 94-1985, Tests for Flammability of Plastic Materials for Parts in Devices and Appliances

ANSI/UL 746B-1986, Polymeric Materials – Long-Term Property Evaluations

ASTM D 149-81, Test Methods for Dielectric Breakdown Voltage and Dielectric Strength of Solid Electrical Insulating Materials at Commercial Power Frequencies[2]

ASTM D 150-87, Test Methods for AC Loss Characteristics and Permittivity (Dielectric Constant) of Solid Electrical Insulation Materials[2]

ASTM D 229-86, Method of Testing Rigid Sheet and Plate Materials for Electrical Insulation[2]

ASTM D 256-88, Test Methods for Impact Resistance of Plastics and Electrical Insulating Materials[2]

[2] Available from ASTM, 1916 Race Street, Philadelphia, PA 19103.

ASTM D 257-78 (1983), Test Methods for DC Resistance for Conductance of Insulating Materials[2]

ASTM D648-2 (R1988), Test Method for Deflection Temperature of Plastics under Flexural Load[2]

ASTM D 790-86, Test Methods for Flexural Properties of Unreinforced and Reinforced Plastics and Electrical Insulating Materials[2]

ASTM D 2303-85, Test Method for Liquid-Contaminant, Inclined-Plane Tracking and Erosion of Insulating Materials[2]

ASTM D 3029-84, Test Method for Impact Resistance of Rigid Plastic Sheeting or Parts by Means of a Tup (Falling Weight)[2]

NEMA LI 1-1983, Industrial Laminated Thermosetting Products[3]

NEMA LI 6-1983, Relative Temperature Indices of Industrial Thermosetting Laminates[3]

NEMA SG 6, Power Switching Equipment[4]

3. Definitions

3.1 Design Tests. Tests made by the manufacturer to determine the adequacy of the design of a particular type, style, or model of equipment or its component parts to meet its assigned ratings and to operate satisfactorily under normal service conditions or under special conditions if specified, may be used to demonstrate compliance with applicable standards of the industry.

NOTES:

(1) Design tests are made on representative apparatus or prototypes to verify the validity of design analysis and calculation methods and to substantiate the ratings assigned to all other apparatus of basically the same design. These tests are not intended to be made on every design or to be used as part of normal production. The applicable portion of these design tests may also be used to evaluate modifications of a previous design and to ensure that performance has not been adversely affected. These data from previous similar designs may also be used for current designs, where appropriate. Once made, the tests need not be repeated unless the design is changed so as to modify performance.

(2) "Design tests" are sometimes called "type tests."

3.2 Production Tests. Tests made for quality control by the manufacturer on every device, on repre-

[3] Available from National Electrical Manufacturers Association, 2101 L Street, NW, Washington, DC 20037.

[4] At the time of publication, this standard was under development. Contact NEMA for more recent information.

Copyright National Electrical Manufacturers Association
Provided by IHS under license with NEMA
No reproduction or networking permitted without license from IHS
Not for Resale

sentative samples, or on parts of materials as required to verify during production that the product meets the design specifications and applicable standards.

NOTES:
(1) Certain quality assurance tests on identified critical parts of repetitive high-production devices may be tested on a planned statistical sampling basis.
(2) "Production tests" are sometimes called "routine tests."

3.3 Conformance Tests. Conformance tests demonstrate compliance with the applicable standards. The test specimen is normally subjected to all planned production tests prior to initiation of the conformance test program.

NOTE: The conformance tests may, or may not, be similar to certain design tests. Demonstration of margin (capabilities) beyond the standards is not required.

4. General Test Conditions

4.1 Ambient Conditions. The conditions prevailing at the test site during tests on MC switchgear shall be those usual service conditions specified in Section 3 of ANSI/IEEE C37.20.2-1987, except that the temperature of the air surrounding the assembly (ambient) for the continuous current test shall be within the range of 10°C to 40°C.

4.2 Protection and Conditions – Control and Instrumentation

4.2.1 General. All voltage circuits used for control, relaying, or metering shall be protected within the MC switchgear as follows:

(1) All circuits supplied from external sources (alternating current or direct current) shall have short-circuit protection within the control-source incoming section. This may be provided by a single set of short-circuit protective devices.

(2) All circuits supplied from internal sources (alternating current or direct current) shall have short-circuit protection within the same section as the supply source. If these circuits are supplied by a control-power transformer, this protection may be in the primary circuit only.

Overcurrent protection of voltage circuits may be provided in addition to the required short-circuit protection.

Voltage and current transformers shall be used for all instruments, meters, and relays connected to alternating-current circuits over 240 volts in order to reduce the voltage on instrument wiring that must necessarily be closely grouped.

Other circuits supplying loads, such as heaters, lights, or receptacles, shall have overload and short-circuit protection.

Overcurrent protection is not permitted in current-transformer secondary circuits.

4.2.2 Control-Power Transformers. Control-power transformers shall be protected in the primary circuits with current-limiting fuses and the fuses interlocked in accordance with 6.2.4(4) in ANSI/IEEE C37.20.2-1987.

4.2.3 Voltage Transformers. Voltage transformers shall be protected in the primary circuit with current-limiting fuses and mounted in accordance with 6.2.6 in ANSI/IEEE C37.20.2-1987.

5. Conformance Test Requirements

5.1 General. Tests are made on representative test arrangements of MC switchgear as described in 5.3 to demonstrate the capability of the MC switchgear design to meet its assigned ratings and to operate under normal service conditions as outlined in Section 3 of ANSI/IEEE C37.20.2-1987. The circuit-breaker design utilized shall have been previously qualified in accordance with ANSI C37.54-1987 or tested simultaneously with the requirements of this standard.

5.2 Test Requirements. Representative test arrangements shall be subjected to the following tests as described in the subsections indicated in parentheses:

(1) Dielectric test (5.5)
(2) Mechanical performance test (5.6)
(3) Continuous current test (5.7)
(4) Short-time current withstand test (5.8)
(5) Momentary current withstand test (5.9)

5.3 Test Arrangements. Each test-arrangement construction shall contain a vertical circuit-breaker section and an auxiliary section. There shall be a main bus in each section and the test arrangement shall include a main-bus splice. The main bus shall be typical, and of the same current rating as the circuit breaker.

Each test arrangement shall include the maximum available number of current transformers per phase of standard accuracy class or greater in accordance with Table 5 of ANSI/IEEE C37.20.2-1987, and which shall be installed in the circuit-breaker vertical section's standard locations. Current transform-

Copyright National Electrical Manufacturers Association
Provided by IHS under license with NEMA
No reproduction or networking permitted without license from IHS
Not for Resale

Table 1
Representative Test Arrangements

Test Arrangement Number	MC Switchgear		Circuit Breaker	
	Rated Maximum Voltage (kV)	Rated Continuous Current (A)	Maximum Short-Circuit Current Capability (rms Symmetrical) kA	Close-and-Latch Capability (rms Asymmetrical) kA
1	4.76	1200	36	58
2	4.76	2000	36	58
3	4.76	1200	49	78
4	4.76	2000	49	78
5	4.76	3000	49	78
6	8.25	1200	41	66
7	8.25	2000	41	66
8	15	1200	23	37
9	15	2000	23	37
10	15	1200	36	58
11	15	2000	36	58
12	15	1200	48	77
13	15	2000	48	77
14	15	3000	48	77
15	38	1200	35	56
16	38	2000	35	56
17	38	3000	35	56
18	38	1200	40	64
19	38	3000	40	64

ers shall have the secondary windings shorted and grounded for all tests and be rated as follows:

Circuit-Breaker Rating	Current-Transformer Ratio
1200 A	1500:5
2000 A	3000:5
3000 A	4000:5

An auxiliary section of the test arrangement for each voltage class that is to receive the dielectric tests (5.5) shall contain within one of its compartments a voltage transformer assembly of manufacturers' standard design having a disconnecting means and three voltage transformers connected wye–wye.

In the same test arrangement, a control-power-transformer disconnecting primary fuse assembly shall also be installed in one of the remaining compartments of the auxiliary section. Its primary stationary contacts shall also be connected to the main bus; however, connections from the load side contacts to a control-power transformer are not required. Two fuses shall be installed for a standard line–line connection.

5.4 Commonalities of Designs and Tests. Due to similarities in design and construction of functional elements used on several different types, styles, models, sizes, or ratings of MC switchgear, a test conducted on one test arrangement shall be properly extended to qualify other test arrangements using similarly designed elements within the intent of this standard. In each case, consideration must be given to the nature of the specific test, its influence on the MC switchgear performance, and the elements of the MC switchgear that will be affected. Listed in Table 1 are the various voltage and continuous current ratings of MC switchgear and the associated circuit-breaker close and latch, and short-circuit current capabilities. Representative test arrangements are to be selected from them. The following criteria are intended for information and guidance in the selection of the representative test arrangement for each test and shall not limit its applicability.

(1) *Dielectric Test.* One test arrangement for each voltage class or combination of voltage classes that has the most highly electrically stressed insulation, e.g., minimum air clearance, shortest creepage path, and the like.

Copyright National Electrical Manufacturers Association
Provided by IHS under license with NEMA
No reproduction or networking permitted without license from IHS
Not for Resale

Table 2
Typical Examples of Choosing Representative Test Arrangements

Test Number	Test Arrangements Having Equivalent Design	Test Required Only On Test Arrangement Number
1 Dielectric Tests (5.5)	1, 2, 3, and 4	4
	5	5
	6, 7, 8, 9, 10, and 11	11
	12, 13, and 14	14
	15, 16, and 17	17
	18 and 19	19
2 Mechanical Performance Tests (5.6)	1, 2, 3, and 4	4
	5 through 14	14
	15, 16, and 17	17
	18 and 19	19
3 Continuous Current Tests (5.7)	1 and 3	1
	2 and 4	2
	5 and 14	5
	6, 8, 10, and 12	8
	7, 9, 11, and 13	9
4 Short-Time Current Withstand Tests (5.8)	1, 2, 3, and 4	3
	5 and 14	5
	6 through 13	12
	15, 16, and 17	15
	18 and 19	18
5 and 6 Momentary Current Withstand Test (5.9) and Impulse Withstand Tests (5.5.3)	1 and 2	1
	3 and 4	3
	6 through 11	6
	12, 13, and 14	12
	15, 16, 17	15
	18 and 19	18

(2) *Mechanical Performance Test.* The highest continuous current rating of the circuit breaker used with each type of interlocking arrangement.

(3) *Continuous Current Test.* The most compact design for each continuous current rating and having the highest current density.

(4) *Short-Time Current Withstand Test.* The highest short-circuit current densities.

(5) *Momentary Current Withstand Test.* For comparable bus bracing and spacings, the smallest conductor size; or for comparable bus design, the highest short-circuit current rating.

Representative test arrangements shall be determined prior to testing (see Tables 1 and 2).

Typical examples of equivalent designs are given in Table 2, and would result in tests being conducted in the following manner. The examples in Table 2 will vary for each manufacturer.

Test Number	Test Required On Test Arrangement Numbers
1	4, 5, 11, 14, 17, and 19
2	4, 14, 17, and 19
3	1, 2, 5, 8, 9, and 15 through 19
4	3, 5, 12, 15, and 18
5 and 6	1, 3, 6, 12, 15, and 18

5.5 Dielectric Tests. Low-frequency withstand voltage tests (5.5.2) and impulse withstand tests (5.5.3) shall be made on switchgear assemblies to demonstrate the ability of the insulation system to withstand overvoltages.

During dielectric testing the voltage-transformer assembly shall be in the connected position with the primary current-limiting fuses removed to disconnect the voltage-transformers. The stationary primary contacts shall be connected to the main bus and the voltage-transformer secondary windings

Copyright National Electrical Manufacturers Association
Provided by IHS under license with NEMA
No reproduction or networking permitted without license from IHS
Not for Resale

grounded. The control-power-transformer disconnecting primary fuse assembly shall be in the connected position.

5.5.1 General. The tests on the insulation system shall be made as follows:

(1) With the circuit breaker in the connected position, apply the test voltage between primary circuits and ground:

(a) *With the circuit-breaker contacts closed.* Between each phase of the test arrangement individually with the frame and the other phases grounded.

(b) *With the circuit-breaker contacts open.* Between each terminal (incoming and outgoing) of the test arrangement individually with the frame and all other terminals grounded.

(2) With the circuit breaker in the test position and closed, apply the test voltage to the primary circuits, simultaneously to all incoming terminals of the test arrangement, with the frame and outgoing terminals grounded. Repeat the tests by applying the test voltage to the outgoing terminals with the frame and incoming terminals grounded.

5.5.2 Low-Frequency Withstand Voltage Tests

5.5.2.1 Purpose of Tests. When these tests are applied to a new MC switchgear during production tests, they demonstrate the low-frequency withstand voltage rating assigned to the MC switchgear in accordance with ANSI/IEEE C37.20.2-1987.

5.5.2.2 Description of Tests.

5.5.2.2.1 Low-frequency withstand voltage tests shall be made in accordance with ANSI/IEEE 4-1978 unless otherwise specified.

5.5.2.2.2 The voltage to be applied for 1 minute shall be the rated low-frequency withstand voltage specified in Table 1 of ANSI/IEEE C37.20.2-1987.

5.5.2.2.3 The frequency of the test voltage shall be the rated frequency of the MC switchgear ±20 percent.

5.5.2.2.4 The voltage shall be an alternating single-phase voltage.

5.5.2.2.5 In making the test, the initial voltage applied shall be permitted to be not more than 50 percent of the appropriate test level. The voltage shall then be permitted to be raised uniformly at a rate not greater than 750 volts per second to the test level. The voltage shall be held at the test level for not less than 1 minute. The voltage shall be reduced uniformly to 50 percent of test level or less before it is switched off.

5.5.2.2.6 The test shall be made under dry conditions at the atmospheric temperature, pressure, and humidity prevailing at the test site. Suitable correction factors shall be applied to the actual measured values of low-frequency withstand voltage to convert them to the standard atmospheric conditions in accordance with 1.3.5 of ANSI/IEEE 4-1978. Humidity-correction factors shall be based on Figure 1.4 of ANSI/IEEE 4-1978.

5.5.2.3 Performance. The MC switchgear shall be judged to have passed the test if it has withstood the required level of test voltage for 1 minute in accordance with the tests specified in 5.5.1. (Audible noises or discharges associated with corona that are frequently encountered in high-voltage testing are not necessarily indicative of failure.)

If the MC switchgear did not pass, the provisions of Section 8 shall apply.

5.5.3 Impulse Withstand Tests. These tests demonstrate conformance with the full-wave impulse-withstand-voltage rating assigned to a MC switchgear in accordance with ANSI/IEEE C37.20.2-1987. The MC switchgear to be tested shall be new and clean, and shall not have been subjected to prior tests, except as specified in 5.9.4(2) and in Section 9.

NOTE: Some insulating materials retain a charge after an impulse test, and for these cases care should be taken when polarity is being reversed. To allow the discharge of insulating materials, the use of appropriate methods such as application of impulses of the reverse polarity at lower voltages before the tests is recommended.

5.5.3.1 Description of Tests

5.5.3.1.1 The impulse withstand test shall be conducted in accordance with ANSI/IEEE 4-1978, unless otherwise specified.

5.5.3.1.2 The standard 1.2/50 impulse-voltage wave with crest value equal to the rated impulse withstand voltage of the MC switchgear being tested shall be applied in accordance with 2.4 of ANSI/IEEE 4-1978. In these tests, three positive and three negative impulse voltages shall be applied to each point without causing damage or flashover. If prior testing shows that tests of one polarity are more severe, tests using the opposite polarity shall be omitted.

5.5.3.1.3 Tests shall be made under dry conditions at the atmospheric temperature, pressure, and humidity prevailing in the test laboratory. Suitable correction factors shall be applied to the actual measured values of impulse voltage to convert them to standard atmospheric conditions in accordance with 1.3.5 of ANSI/IEEE 4-1978. Humidity correction factors shall be based on curves derived for rod gaps in accordance with Figure 1.4 of ANSI/IEEE 4-1978.

Copyright National Electrical Manufacturers Association
Provided by IHS under license with NEMA
No reproduction or networking permitted without license from IHS
Not for Resale

5.5.3.2 Performance. Based upon tests conducted with each test sequence (5.5.3.1.2) being comprised of consecutive applications of impulse voltage, the evaluation of the performance of the MC switchgear shall be made on the basis of each of these sequences. If no disruptive discharge or flashover, or both, occur during a particular sequence, the MC switchgear shall be judged to have passed that sequence. If a single disruptive discharge or flashover, or both, have occurred during a particular sequence, that sequence shall be repeated for the same terminal or terminal grouping. During the repeated sequence, if there is no disruptive discharge or flashover, or both, the MC switchgear shall be judged to have passed the repeated sequence with the single disruptive discharge or flashover, or both, occurring in the first sequence being considered to have been a random occurrence. If a disruptive discharge or flashover, or both, occur during the repeated sequence, the MC switchgear shall be judged to have failed that sequence only, and the provisions of Section 8 shall be applied.

For a MC switchgear to be judged to have demonstrated the assigned rated impulse-withstand-test voltage, it shall have passed all of the required tests in accordance with 5.5.3.

5.6 Mechanical Performance Tests

5.6.1 Removable Circuit Breaker. Mechanical endurance tests shall be performed to demonstrate proper operation of the following elements, with all external primary connections removed:

(1) Separable primary contacts
(2) Separable control contacts
(3) Circuit-breaker removable element position interlocks
(4) Stored-energy mechanism interlocks, as applicable
(5) Auxiliary switches mounted on stationary structure
(6) Housing-mounted breaker position switches

The tests shall be performed with a stored-energy-operated circuit breaker. Tests are not required on circuit breakers having other types of mechanisms if the interlocks are the same for both. If they are not, the other designs shall be tested.

The test shall consist of ten complete cycles of operation as described in this subsection, without repair or replacement of any functional parts. Proper operation of auxiliary switches mounted on a stationary structure and housing-mounted breaker position switches shall be verified during the following tests by monitoring the contact position of these switches as applicable.

The circuit breaker shall be open and in the disconnected position with the stored-energy mechanism discharged. Separable contacts shall be lubricated according to the manufacturer's recommendations.

Each complete cycle of operation shall consist of the following steps:

Step 1. Move the circuit breaker to the test position and, if required, install a secondary test coupler.

NOTE: The test position may correspond to the disconnect position.

(a) Close the circuit breaker.
(b) Check to assure that the circuit breaker cannot be moved to the connected position while closed.
(c) Open the circuit breaker.

Step 2. Move the circuit breaker to a position approximately midway between the test and connected positions, or as close to a midposition as the removable secondary test coupler (if required) will permit. Check to assure that the circuit breaker cannot be closed, either electrically or mechanically.

Step 3. Remove the secondary test coupler, if present, and move the circuit breaker to the connected position.

(a) Close the circuit breaker.
(b) Check to assure that the circuit breaker cannot be moved out of the connected position while closed.
(c) Open the circuit breaker.

Step 4. Move the circuit breaker to a position approximately midway between the test and connected positions, or as close to a midposition as the removable secondary test coupler (if required) will permit. Check to assure that the circuit breaker cannot be closed, either electrically or mechanically.

Step 5. Move the circuit breaker to the test position and, if required, install a secondary test coupler.

(a) Close the circuit breaker.
(b) Check to assure that the circuit breaker cannot be moved to the connected position while closed.
(c) Open the circuit breaker.

Step 6. Remove the secondary test coupler, if present, and move the circuit breaker to the disconnect position.

NOTE: The disconnect position may correspond to the test position.

Copyright National Electrical Manufacturers Association
Provided by IHS under license with NEMA
No reproduction or networking permitted without license from IHS
Not for Resale

After completion of ten cycles, check to assure that when the mechanism is in the fully charged condition, either the closing function is blocked or the interlocks ensure mechanism discharge before or during withdrawal of the circuit breaker from the housing. (Automatic discharge is a commonly accepted method.)

5.6.2 Control-Power-Transformer Primary Fuses or Drawout Control-Power Transformers. Mechanical endurance tests shall be performed to demonstrate proper operation of the following elements with all external primary connections removed:

(1) Separable primary contacts
(2) Separable control contacts
(3) Interlock to prevent disconnection of and access to the control-power-transformer primary fuse unless the secondary circuit is open

The test shall consist of ten complete cycles of operation as described in this subsection, without repair or replacement of any functional parts. Each complete cycle shall consist of the following steps:

Step 1. Move the control-power transformer or its primary fuse to the connect position, and secure in position.

Step 2. Close the secondary circuit of the control-power transformer (operation of mechanical interlocks may be required).

Step 3. Check to assure that the control-power-transformer primary fuse cannot be disconnected or access be gained to it.

Step 4. Open the secondary circuit and operate the mechanical interlock as required.

Step 5. Disconnect the control-power transformer or its primary fuse to the open position.

Perform Steps 1 through 5 ten times.

5.6.3 Disconnecting Voltage Transformers. The testing of disconnecting voltage transformers shall be done in the same manner as in 5.6.2, except that Steps 2, 3, and 4 are not applicable.

5.6.4 Performance. At the completion of these tests, the mechanism parts and interlocks shall be in essentially the same condition as before the test, and there shall be no galling of the separable primary or control contacts. If the MC switchgear is judged to have failed, the provisions of Section 8 shall apply.

5.7 Continuous Current Test. The continuous current test is made to ensure that the MC switchgear test arrangement can carry the rated continuous current of the circuit breaker at rated frequency without exceeding the allowable temperature limits specified in Tables 3 and 4 of ANSI/IEEE C37.20.2-1987, and in Tables 3 and 4 of ANSI C37.04-1979.

The MC switchgear test arrangement shall be tested using a three-phase source of power at a frequency of not less than rated frequency. The MC switchgear to be tested shall be clean and dry. If the test arrangement selected for continuous current tests has been subjected to prior tests, it shall be permitted to be maintained. The average of the three-phase currents is to be maintained at no less than the rated continuous current of the circuit breaker. A single-phase source of power (all phases in series with flow of current reversed with adjacent phases) may be used at the option of the manufacturer. Any convenient voltage shall be used.

NOTE: The usual practice is to supply the current by using transformers whose output voltages are less than 10 volts to avoid interference with temperature-measuring equipment.

5.7.1 Method of Measuring Stability of Temperature Rise

5.7.1.1 The continuous current test shall be made for such a period of time that the temperature rise of any monitored point in the assembly has not increased by more than 1.0°C during each of two successive 30-minute intervals as indicated by three successive readings. If the temperature rise at the end of the second interval is equal to the established limits and if the temperature rise has increased since the previous reading, the test shall be continued until the temperature rise is constant.

5.7.1.2 At the same times when three successive temperature measurements are being made for the purpose of determining the stability of the temperature rise, the currents in each of the three phases of the MC switchgear shall also be measured. The average of these nine current measurements shall not be less than the rated continuous current of the MC switchgear. No individual current measurement shall be less than 90 percent or more than 110 percent of the rated continuous current. When the temperature is being monitored on only one phase of the MC switchgear as specified in 5.7.2.5, the average of three currents shall be used, and none of the current measurements on the monitored phase shall be less than the rated continuous current.

5.7.2 Method of Measuring Temperatures. The temperatures of various parts of the test arrangement shall be monitored with thermocouples connected to a suitable temperature-measuring device.

Copyright National Electrical Manufacturers Association
Provided by IHS under license with NEMA
No reproduction or networking permitted without license from IHS
Not for Resale

5.7.2.1 Thermocouples shall be held in intimate contact with the metallic parts whose temperature is being monitored. This contact shall be achieved by such methods as welding, drilling and peening, or cementing. Whenever possible, unless otherwise specified, thermocouples shall be located on or near the uppermost side of the part being monitored.

5.7.2.2 Thermocouples shall be used to monitor the temperature rise of insulating members that are in intimate contact with continuous-current-carrying parts. These thermocouples shall be located in the current-carrying part as close as practical to the accessible junction of the insulation and the metallic part. Normally, thermocouples shall be located near both incoming and outgoing ends of each insulating component where a continuous-current-carrying part passes through more than 3 inches (77 mm) of insulation as measured along the principal axis of the conductor. For cable terminations, the thermocouples shall be located at the junction of the conductor and its insulation.

5.7.2.3 Thermocouples used to monitor the temperature rise of separable primary contacts of circuit-breaker main contacts and of hinged contacts in the continuous current path shall be located within approximately 0.5 inch (13 mm) of the actual contact area, unless otherwise specified in this standard. It is recognized that thermocouples cannot be located directly in the actual contact area without destroying the functional effectiveness of the contact. Thermocouples shall be located on both incoming and outgoing sides of each single-contact area. Where a contact assembly is comprised of multiple segments cooperating in a parallel combination to perform a single-contact function, the multiple-contact assembly shall be treated as a single contact for purposes of this subsection. Where a contact assembly is comprised of one or more bridging members, each functioning in a series combination with actual contact areas at both ends of the individual bridging element so that the multiple-contact assembly performs a single-contact function, the contact assembly shall be treated as a single contact for purposes of this subsection if the distance between actual contact areas is less than 3 inches (77 mm). For bridging-type contact assemblies having actual contact areas further apart than 3 inches (77 mm), a single thermocouple shall be located in at least one bridging member approximately midway between actual contact areas in addition to the thermocouple required both at incoming and at outgoing sides of the contact assembly.

5.7.2.4 Where insulation is disposed along the primary conductor adjacent to the near side of a contact area so that two thermocouples would be located within 3 inches (77 mm) of each other under provisions stated in 5.7.2.2 and 5.7.2.3, the thermocouple adjacent to the near side of the contact area shall be omitted.

5.7.2.5 Where prior tests indicate that stabilized temperature readings for corresponding locations on each of the phase-conducting components are not different from each other by more than 5°C, it shall be permitted to monitor only the interior phase members of the test arrangement. If prior tests indicate that a particular location on any phase had a temperature rise within 5°C or less of the maximum allowed temperature rise for that location, all similar locations on each phase of the test arrangement shall be monitored.

5.7.2.6 The temperature of parts of the MC switchgear accessible to an operator during the normal course of operation shall be monitored. A single thermocouple shall be permitted to be located at a position that shall reasonably reflect the average temperature of the several accessible parts. If prior tests or experience indicate that the temperature rise of a given accessible part would be within 5°C or less of the maximum allowable temperature rise, the thermocouple shall be located at a midposition on that particular part.

5.7.2.7 The temperature rise of primary conducting parts and contact areas that are provided for functions other than the carrying of continuous current and that are not directly in the continuous current path shall not be monitored, even though such parts or contact areas may be in intimate contact with primary current-carrying conductors. Typical examples of such parts include, but are not limited to, the following: auxiliary conductors and contacts for transferring current into interrupter assemblies during circuit-breaker opening operations, and metallic supporting parts.

5.7.3 Measurement of Ambient Air Temperature. Indoor ambient air temperatures shall be determined by taking the average of the readings of three temperature-measuring devices, such as thermometers or thermocouples, placed as follows:

(1) One level with the top of the structure

(2) One 12 inches (305 mm) above the bottom of the structure

(3) One midway between the two above positions

All temperature-measuring devices shall be placed 12 inches (305 mm) from the structure, not in front of ventilators, and in locations unaffected

Copyright National Electrical Manufacturers Association
Provided by IHS under license with NEMA
No reproduction or networking permitted without license from IHS
Not for Resale

Table 3
Copper Conductors for Connection to the Main Bus for Use in Continuous Current Tests

Main Bus Rating (A)	Copper Bus per Terminal*		
	Quantity	Size	
		inch	mm
1200	1	1/4 × 4	6.35 × 101.6
2000	2	3/8 × 4	9.52 × 101.6
3000	3	3/8 × 5	9.52 × 127.0

* Where multiple bus bars are used, they are to be spaced 3/8 inch (9.52 mm) apart. Configurations shall be vertical unless the design of the test arrangement requires them to be horizontal. The determination of the configuration shall be at the option of the manufacturer.

Table 4
Copper Conductors for Connection to Feeder-Circuit-Breaker Outgoing Terminals or Extensions for Use in Continuous Current Tests

Circuit-Breaker Rating (A)	Circular-Mil Size of Copper Conductor	Copper Bus per Terminal*		
		Quantity	Size	
			inch	mm
1200	4-500M per phase	–	–	–
2000	–	2	3/8 × 4	9.52 × 101.6
3000	–	3	3/8 × 5	9.52 × 127.0

*Where multiple bus bars are used, they are to be spaced 3/8 inch (9.52 mm) apart. Configurations shall be vertical unless the design of the test arrangement requires them to be horizontal. The determination of the configuration shall be at the option of the manufacturer.

by drafts caused by the structure or appreciable radiation from the equipment. When the ambient air temperature is subject to variations that might result in errors in measuring the temperature rise, the temperature-measuring devices should be immersed in suitable liquid, such as oil, in a suitable container, or reliably attached to a suitable mass of metal.

NOTE: A convenient form for such a container consists of a metal cylinder with a hole drilled partly through it. This is filled with liquid and the temperature-measuring device placed therein.

A glass bottle may also be used as a container. The size of the container should be at least 1 inch (25.4 mm) in diameter and 2 inches (50.8 mm) high.

5.7.4 Conductors for Use in Continuous Current Tests. Bus bars shall be utilized for connection to the main bus extending from the auxiliary section. The connection to the circuit-breaker outgoing terminals shall also be bus bars for 2000-ampere and 3000-ampere circuit-breaker continuous current ratings. The normal bus bar connection for both conditions is to utilize bars of the identical material, size, and arrangement as provided internally within the assembly. Copper bus bars in accordance with Tables 3 and 4 may be substituted at the option of the manufacturers. Cables as specified in Table 4 shall be utilized for connection to 1200-ampere circuit-breaker outgoing terminals. The conductors shall have a minimum external length of 4 feet (1.2 meters) and shall be insulated for proper voltage class in accordance with the manufacturer's recommendation.

5.7.5 Performance. The MC switchgear test arrangement shall be judged to have passed the test if the limits of observable temperature rise specified in Table 4 of ANSI/IEEE C37.20.2-1987, and Tables 3 and 4 of ANSI C37.04-1979, are not exceeded. If the MC switchgear is judged to have failed, the provisions of Section 8 shall apply.

Copyright National Electrical Manufacturers Association
Provided by IHS under license with NEMA
No reproduction or networking permitted without license from IHS
Not for Resale

5.8 Short-Time Current Withstand Test. A short-time current withstand test shall be made to demonstrate the ability of the MC switchgear test arrangement to carry current equal to the circuit-breaker maximum short-circuit current *KI* for a period of time equal to its rated permissible tripping delay *Y* (2 seconds) (see Table 1 for required values).

The circuit-breaker designs shall have previously met the conformance test requirements for short-circuit-current-carrying capability as required by 3.9 of ANSI C37.54-1987. If the circuit-breaker vertical section is physically equivalent to the circuit-breaker test enclosure, only the main bus and ground bus require testing. If testing of the circuit-breaker vertical section is required, a dummy breaker may be used in place of the circuit breaker. If the MC switchgear selected for test has been subjected to prior tests, it shall be permitted to be maintained.

The MC switchgear shall be grounded with a minimum of 4/0 copper conductor.

5.8.1 Description of Tests

5.8.1.1 The main-bus incoming terminals shall be connected to the test-circuit power source. Three-phase tests[5] shall be made with shorting bar(s) connected as follows:

(1) *For the test of the main bus only.* At the opposite end of the main bus from the incoming terminals, to cause current to flow through the main bus and splice

(2) *For the test of the main bus and circuit-breaker vertical section.* At outgoing terminals of the circuit-breaker vertical section

The test shall be permitted to be either a three-phase test or a single-phase test. In case of a three-phase test, the level of current specified in 5.8.2.1 shall be required in only one of the phases. In case of a single-phase test, the current shall be permitted to be conducted through any two adjacent poles connected in series so that the current flows in opposite directions in each of the selected poles.

5.8.1.2 A single-phase test shall be made to prove the adequacy of the ground bus to carry current equal to the circuit-breaker maximum short-circuit current for a 2-second period. For this test, a short-circuit connection shall be made between the ends of the ground bus and the nearest phase main bus at the end opposite the main-bus incoming terminals of the test arrangement.

5.8.1.3 The short-circuit connections shall be made with bolted bars of cross section equal to the bus being tested.

5.8.2 Test-Circuit Conditions

5.8.2.1 The current shall be monitored throughout the duration of the test. The root-mean-square value of current shall be determined by using the method described in 7.1.6 of ANSI C37.09-1979. This value squared times the duration of the test shall be no less than $(KI)^2Y$. The rms value of current for the three-phase test shall be no less than *KI*.

To ensure that the single-phase test is not required to be more severe mechanically than the three-phase test, its rms current level may be reduced to not less than 0.93 *KI*, and the time is to be extended to provide an equivalent I^2t.

5.8.2.2 The test voltage may be any convenient level (600 volts or less is commonly used).

5.8.2.3 The circuit power factor (*X/R* ratio) may be any convenient value, since the amount of current asymmetry will have a negligible effect on heating during the required periods.

5.8.2.4 If the test circuit meets the requirements of 5.9.3, this test may be combined with the momentary current withstand test (5.9).

5.8.3 Performance. The MC switchgear shall be judged to have passed the test if it has carried the required rms level of current for the required time and has suffered no significant damage, such as welding of the primary disconnect contacts or part breakage, as a consequence of the test. If the MC switchgear is judged to have failed the test, the provisions of Section 8 shall apply.

5.9 Momentary Current Withstand Test. A momentary current withstand test shall be made to demonstrate the mechanical adequacy of the structure, buses, and connections to withstand the maximum short-circuit stresses that could occur when properly applied on systems where the rms asymmetrical value of short-circuit current is equal to the close-and-latch rating of the circuit breakers in MC switchgear (see Table 1 for required values).

The circuit-breaker designs shall have previously met the conformance test requirements for short-circuit performance as required by ANSI C37.54-1987. If the circuit-breaker vertical section is physically equivalent to the circuit-breaker test enclosure, only the main bus and ground bus require testing. If testing of the circuit-breaker vertical section is required, a dummy breaker may be used in place of the circuit breaker.

The MC switchgear shall be grounded with a minimum of 4/0 copper conductor.

[5] Single-phase tests are permissible if it can be determined that they are at least as severe as the three-phase test.

Copyright National Electrical Manufacturers Association
Provided by IHS under license with NEMA
No reproduction or networking permitted without license from IHS
Not for Resale

If the MC switchgear selected for the test has been subjected to prior tests, it shall be permitted to be maintained.

The incoming bus structure used in a switchgear assembly shall be considered as meeting the short-circuit requirements if its construction is equivalent to that of the main-bus structure that was tested and found to meet the short-circuit requirements.

5.9.1 Description of Tests

5.9.1.1 The main-bus incoming terminals shall be connected to the test-circuit power source. Three-phase tests[5] shall be made with shorting bar(s) connected as follows:

(1) *For the test of the main bus only.* At the opposite end of the main bus from the incoming terminals, to cause current to flow through the main bus and splice.

(2) *For the test of the main bus and circuit-breaker vertical section.* At outgoing terminals of the circuit-breaker vertical section.

5.9.1.2 A single-phase test shall be made to demonstrate the mechanical adequacy of the ground bus with respect to the nearest phase bus, to withstand the short-circuit stresses caused by carrying current having an asymmetrical value equal to the close-and-latch rating of the circuit breaker (see Table 1 for required values). The short-circuit connection shall be made between the ends of the ground bus and the nearest phase main bus at the end opposite the test-arrangement main-bus incoming terminals.

5.9.1.3 Insofar as possible, the test and short-circuit connections shall not add intentional bracing nor impose additional loading to the bus structure being tested.

5.9.2 Test Duration. The duration of current flow during the momentary current withstand test shall be for no less than ten cycles on a 60-hertz basis (0.167 second).

5.9.3 Test-Circuit Conditions

5.9.3.1 The three-phase rms asymmetrical current that verifies the momentary current withstand rating shall be measured at the major peak of the maximum cycle as determined from the envelope of the current wave and calculated in accordance with 7.1.4.3 of ANSI C37.09-1979.

5.9.3.2 The power factor of the test circuit shall be 15 percent lagging or less (X/R ratio of 6.6 or greater) with X and R in series connection. See Table 2 of ANSI/IEEE C37.26-1972 for multiplying factors.[6]

5.9.3.3 The frequency of the test circuit shall be 60 hertz ±20 percent.

5.9.3.4 The test voltage may be any convenient level (600 volts or less is commonly used).

5.9.4 Performance. The MC switchgear test arrangement shall be judged to have passed the test if it has carried the required current for ten cycles, if there is no breakage of the bus supports, and if either:

(1) No permanent deformation of bus bars, or

(2) Deformation of bus bars up to 10 percent of design spacing is permitted.

Deformation above this allowance may require a repeat of the impulse withstand tests (5.5.3) to verify conformance. Permanent deformation of bus bars and supports shall not impair mechanical performance as specified in 5.6.

If the MC switchgear is judged to have failed the test, the provisions of Section 8 shall apply.

6. MC Switchgear Components

6.1 Accessory Devices

6.1.1 General accessory devices, as contrasted with functional components, are those devices that are not basically required for proper operation of a circuit breaker, but perform a secondary or minor function as an adjunct or refinement to the primary function of the circuit breaker. No conformance testing shall be required.

6.1.2 Cell-mounted functional components (e.g., mechanism-operated auxiliary switches) and accessories (e.g., circuit-breaker position switches) shall conform to the requirements of their applicable device standards and shall not be tested electrically or mechanically other than to demonstrate performance as specified in this standard.

6.1.3 When accessory devices are mechanical only (e.g., key interlocks, and the like, which are operated rather infrequently), normal production tests shall be the criteria for demonstrating the operational performance of these devices.

6.2 Bus Bar Structures. Conformance testing of MC switchgear test arrangements shall provide assurance that other bus bar structures (e.g., incoming bus, transfer bus, bus tie bus, and the like) are in conformance with this standard if it can be determined that the design criteria given in 6.2.1 through 6.2.4 have been provided.

6.2.1 Dielectric Criteria

(1) Equal or greater bus bar insulation dielectric strength

(2) Equal or greater air-clearance distances

[6] This standard has been withdrawn as an American National Standard (pending review or reaffirmation), but is reprinted in the Appendix of ANSI C37.51-1989 (see Section 2).

Copyright National Electrical Manufacturers Association
Provided by IHS under license with NEMA
No reproduction or networking permitted without license from IHS
Not for Resale

(3) Equal or greater creepage distances phase-to-phase and phase-to-ground

6.2.2 Continuous Current Criteria

(1) Equal or greater conductor cross-sectional area

(2) Equal or greater ventilation

(3) Equal or greater conductor spacing

6.2.3 Short-Circuit-Current-Carrying Criteria

(1) Equal or greater conductor cross-sectional area

6.2.4 Momentary Current Withstand Criteria

(1) Equal or greater conductor section modulus

(2) Equal or less bus support spacing

(3) Equal or greater bus support mechanical strength

(4) Equal or greater conductor spacing

6.3 Isolating Switches. The isolating switches used in MC switchgear shall have previously met the conformance test requirements described in ANSI C37.58.[1] If the isolating-switch compartment is physically equivalent to the isolation-switch test enclosure, no conformance testing in accordance with this standard shall be required.

6.4 Drawout Interrupter Switches. The continuous current test shall be conducted in accordance with 5.7 (see ANSI C37.58[1] for interrupter-switch requirements). If the interrupter-switch compartment is physically equivalent to the interrupter-switch test enclosure (described in ANSI C37.58[1]) and the interrupter-switch vertical section is identical to the circuit-breaker vertical section, no other conformance testing in accordance with this standard shall be required. If the interrupter-switch vertical section is not identical to the circuit-breaker vertical section, the conformance test requirements described in ANSI C37.57[1] shall apply.

7. Enclosure Conformance Tests

The enclosure conformance tests shall be conducted to complete the provisions of this standard as applicable to the specified Category Type A, B, or C.[7]

The conformance test requirements for Category B Equipment are included in Appendix A of ANSI/IEEE C37.20.2-1987.

[7] Although metal-clad equipment is normally not designed to Category A specifications, the test requirements for Category A equipment are included in ANSI C37.57. No enclosure security tests are required for Category C equipment.

8. Treatment of Failures

When failures occur during testing, the failures shall be evaluated and corrected, and the equipment shall be retested. A design change made to the MC switchgear to correct a failure in a test shall be evaluated for its effect on preceding tests.

When analysis indicates that a particular corrective action would not have affected results obtained in previous tests, it shall be permitted to take the corrective action without repeating the previously completed tests.

When analysis indicates that a particular corrective action may have caused a failure in tests previously completed, only those tests that may have failed shall be repeated on the MC switchgear to which the corrective action has been applied. In deciding whether or not to repeat a previous test, it is important that the decision be based on the corrective action taken and not on the failure that actually occurred.

9. Production Tests

Unless otherwise specified, all production tests shall be made by the manufacturer at the factory on the complete MC switchgear or its component parts for the purpose of checking the correctness of manufacturing operations and materials (see ANSI/IEEE C37.20.2-1987).

Production tests shall include the following:

(1) Low-frequency withstand voltage tests (9.1)

(2) Mechanical operation tests (9.2)

(3) Grounding of instrument transformer cases test (9.3) (if instrument transformers are of metal case design)

(4) Electrical operation and wiring tests (9.4)

9.1 Low-Frequency Withstand Voltage Tests. Low-frequency withstand voltage tests shall be made at the factory on each switchgear assembly in the same manner as described in 5.5.2, with the exception that tests across the open gap(s) [5.5.1(2)] are not required. Tests shall be made in accordance with 5.5.1(1) and 5.5.2.2. Drawout removable elements need not be tested in the assembly if they are tested separately. Control devices, potential transformers, and control-power transformers, which are connected to the primary circuit, may be disconnected during this test.

9.2 Mechanical Operation Tests. Mechanical operation tests shall be performed to ensure the proper

Copyright National Electrical Manufacturers Association
Provided by IHS under license with NEMA
No reproduction or networking permitted without license from IHS
Not for Resale

functioning of removable element operating mechanisms, shutter, mechanical interlocks, and the like. These tests shall ensure the interchangeability of removable elements designed to be interchangeable.

9.3 Grounding of Instrument Transformer Cases Test. The effectiveness of grounding of each instrument transformer case or frame shall be checked with a low potential source, such as 10 volts or less, by using bells, buzzers, or lights. This test is required only when instrument transformers are of metal case design.

9.4 Electrical Operation and Wiring Tests

9.4.1 Control Wiring Continuity. The correctness of the control wiring of MC switchgear shall be verified by (1) actual electrical operation of the component control devices or (2) individual circuit continuity checks by electrical-circuit testers or (3) both.

9.4.2 Control Wiring Insulation Test. A 60-hertz test voltage, 1500 volts to ground, shall be applied for 1 minute after all circuit grounds have been disconnected and all circuits wired together with small bare wire to short-circuit coil windings. The duration of the test shall be 1 second if a voltage of 1800 volts is applied. At the option of the manufacturer, switchgear-mounted devices that have been individually tested may be disconnected during this test.

9.4.3 Polarity Verification. Tests or inspections shall be made to ensure that connections between instrument transformers and meters or relays, and the like, are correctly connected with proper polarities. Instruments shall be checked to ensure that pointers move in the proper direction. This does not require tests using primary voltage and current.

9.4.4 Sequence Tests. MC switchgear involving the sequential operation of devices shall be tested to ensure that the devices in the sequence function properly and in the order intended. This sequence test need not include remote equipment controlled by the MC switchgear; however, this equipment may be simulated where necessary.

10. Retesting

Retesting is not required if the design has not changed. A design change made to the MC switchgear shall be evaluated for its effect on rated performance. If it is determined that performance may be affected by the change, the relevant conformance tests shall be repeated.

See the Appendix for guidance for evaluation of changes made in insulating materials and systems.

Copyright National Electrical Manufacturers Association
Provided by IHS under license with NEMA
No reproduction or networking permitted without license from IHS
Not for Resale

Appendix

(This Appendix is not part of American National Standard C37.55-1989, but is included for information only.)

Conformance Guide for Evaluation of Changes Made in Insulating Materials and Systems

A1. Scope

This Appendix covers the conformance tests and requirements for evaluation of changes made in materials and insulation systems for medium-voltage switchgear assemblies rated over 1000 volts through 38 kilovolts alternating current.

The original design of the insulation system of the switchgear assembly shall be in conformance with the requirements of ANSI/IEEE C37.20.2-1987.

A2. Purpose

The purpose of this Appendix is to provide a method for evaluating substitute insulating materials and systems so that changes made in these materials and systems may be evaluated without performing a complete series of conformance tests on the switchgear equipment.

A3. Definitions

The definitions of terms contained in this Appendix, or in other standards referred to in this Appendix, are not intended to embrace all legitimate meanings of the terms. They are applicable only to the subject treated in this Appendix. Refer to ANSI C37.100-1981 and C37.100b-1985, ANSI/IEEE C37.20.2-1987, and ANSI/IEEE 100-1988 for definitions not given in this Appendix.

A3.1 Ceramic Insulation. Insulation made of a vitrified ceramic material, such as porcelain or glass.

A3.2 Nonceramic Insulation. Insulation made of a material other than ceramic. This category includes all organic insulating materials.

A3.3 Bus Insulation. Insulating material used to cover primary voltage conductors except where that conductor is a cable or wire. (Bus joint insulation is excluded from this category and is treated separately.) The primary functions of bus insulation are to prevent arc motoring and to allow closer spacing of conductors than would be possible with bare conductors. Bus insulation may also as a secondary function be part of the bus support insulation system.

A3.4 Bus Joint Insulation. Insulating material used to cover joints or connections in the primary voltage conductors. Otherwise, it is similar to bus insulation.

A3.5 Bus Tap Insulation. Insulating material used to cover low-current taps to the main primary voltage conductors. These taps include potential and control-power-transformer primary leads, connections to surge arresters and surge capacitors, and other similar connections. Bus taps may be in the form of a wire, rod, or bar especially insulated similar to bus insulation for this service, or in the form of an insulated wire or cable.

A3.6 Bus Support Insulation. Insulation used primarily to physically support a conductor and prevent or limit its movement under specified operating conditions. Bus support insulation includes both conductor-to-conductor and conductor-to-structure supports.

A3.7 Barrier Insulation. Insulation material used primarily to separate one item or area from another item or area within the equipment. Examples are as follows: (a) interphase barriers between poles of an interrupter switch; (b) bus barriers separating the bus compartment of one vertical section of switchgear from another; and (c) barriers used to shield grounded metal from electrical or thermal effects of circuit interruption within the equipment. Barrier insulation may be subdivided into two general types: Type 1 barriers that are not in contact with, and are not penetrated by, energized parts; and Type 2 barriers that are in contact with, or are penetrated by, energized parts.

A3.8 Circuit-Breaker Primary Disconnects. Penetration insulators that support bus stabs. Their

Copyright National Electrical Manufacturers Association
Provided by IHS under license with NEMA
No reproduction or networking permitted without license from IHS
Not for Resale

Table A1
Relative Thermal Indexes
and Insulating Functions

Insulation Function	Relative Thermal Index		
	Electrical	Mechanical-without-impact	Mechanical-with-impact
Bus	X	–	X
Bus joint	X	–	–
Bus tap	X	–	X
Bus support	X	–	X
Barriers, Type 1	X	X	–
Barriers, Type 2	X	–	X
Entrance bushings	X	–	X
Circuit-breaker primary disconnects	X	–	X

primary function is to insulate the primary bus as it passes through the ground barrier and to support the bus so that it can properly engage the circuit breaker.

A3.9 Entrance Bushings. Insulating structures including a through conductor, or providing a passageway for such a conductor, with provision for mounting on a barrier insulating or otherwise, for the purpose of insulating the conductor from the barrier so that current may be conducted from one side of the barrier to the other. Entrance bushings can be vertically mounted (e.g., roof bushings) or horizontally mounted (e.g., wall bushings).

A3.10 Relative Thermal Index. An indication of a material's ability to retain a particular property when exposed to elevated-use temperatures for an extended period of time. The relative thermal index is determined by the procedures outlined in ANSI/UL 746B-1986. As used in this Appendix, the electrical thermal index includes such properties as dielectric strength, arc resistance, volume resistivity, and the like. The mechanical-without-impact relative thermal index includes such properties as tensile, flexural, shear strength, and the like. The mechanical-with-impact relative thermal index includes the properties of the mechanical-without-impact relative thermal index plus impact properties that are intended to stress the material under sudden-shock loading conditions.

A4. Requirements

This section defines the requirements that must be met by various types of insulating materials for materials substitution.

A4.1 Nonceramic Insulation

A4.1.1 Resistance to Long-Term Aging. Resistance to long-term aging shall be demonstrated by one or more of the methods listed in A4.1.1.1 through A4.1.1.4.

A4.1.1.1 The relative thermal indexes of the material shall be determined in accordance with ANSI/UL 746B-1986 for each thickness of material used. Under normal operating conditions, a material used for an insulation function shall not be exposed to temperatures in excess of its relative thermal indexes for the thickness used. Table A1 specifies which relative thermal indexes are to be considered for each insulating function.

A4.1.1.2 By a history of satisfactory field service. This history must be of sufficient duration to demonstrate satisfactorily the material's long-term capabilities.

A4.1.1.3 By testing of samples aged in service or artificially aged to demonstrate adequately retention of required properties.

A4.1.1.4 If it is desired to substitute a material for a previously qualified material, the substitute material will be considered to have satisfactory

Copyright National Electrical Manufacturers Association
Provided by IHS under license with NEMA
No reproduction or networking permitted without license from IHS
Not for Resale

long-term aging characteristics if it has relative thermal indexes equal to or greater than the relative thermal indexes of the previously qualified material. The relative thermal indexes to be compared are those required for the insulation function under consideration, as listed in Table A1.

A4.1.2 Thermal Cycling Withstand. Circuit-breaker primary disconnects, entrance bushings, and bus and bus tap insulation applied to conductors by dipping, molding, fluidized bed coating, or other process that causes the insulation to adhere to the conductor, must not be damaged by variations in temperature. This capability shall be evaluated by the thermal cycling withstand test (A5.1).

A4.1.3 Dielectric Withstand

A4.1.3.1 Substitute Bus Insulation, Bus Joint Insulation, and Bus Tap Insulation. Substitute bus insulation, bus joint insulation, and bus tap insulation shall pass the test for bus bar insulation in accordance with 5.2.1.3 (foil test) of ANSI/IEEE C37.20.2-1987.

A4.1.3.2 Bus Support Insulation and Barrier Insulation. If it is desired to substitute another insulating material for the one used in the impulse withstand tests, the substitute material will be considered to have adequate dielectric strength if its perpendicular electric strength equals or exceeds the perpendicular electric strength of the original material. Measurement of perpendicular electric strength shall be in accordance with the short-term method in air described in ASTM D 149-81. (The use of the short-term method under oil shall be permitted if the two insulating materials being compared are of the same generic type.)

A4.1.4 Flammability

A4.1.4.1 Substitute flame-resistant sheet or cast insulating materials used in any application other than Type 1 barriers shall meet the requirements for class 94V-0 as set forth in ANSI/UL 94-1985, or those requirements set forth in Method II in ASTM D 229-86.

A4.1.4.2 Substitute flame-resistant sheet or cast insulating materials used as a Type 1 barrier shall meet the requirements for class 94-HB as set forth in ANSI/UL 94-1985, or those requirements set forth in Method II in ASTM D 229-86.

A4.1.4.3 Substitute flame-resistant applied insulation (such as fluidized bed systems, tape systems, shrinkable-type tubing, and the like) shall pass the tests specified in 5.2.7, Flame-Resistance Tests for Applied Insulation, of ANSI/IEEE C37.20.2-1987.

A4.1.5 Tracking Resistance. Substitute bus-support insulation, Type 2 barrier insulation, entrance bushings, and circuit-breaker primary disconnects shall pass the inclined-plane tracking test in accordance with ASTM D 2303-85 by using the time-to-track method with an applied voltage of 2.5 kilovolts. The minimum acceptable time to failure shall be 20 minutes for equipment rated at 5 kilovolts or less and 300 minutes for equipment rated greater than 5 kilovolts.

A4.1.6 Volume Resistivity or Loss Index. For circuit-breaker primary disconnects, the electrical losses of a substitute material will be judged acceptable provided either the volume resistivity [ASTM D 257-78 (1983)] is greater than [or the loss index (ASTM D 150-87) is less than] or equal to that of the previously acceptable material.

A4.1.7 Deflection Capability or Flexural Strength

A4.1.7.1 Bus Insulation. If it is desired to substitute another insulating material for the one used in the momentary current test, the substitute material will be considered to have adequate deflection capability if it provides equivalent or greater performance as shown by testing in accordance with the deflection test in A5.2.

A4.1.7.2 Entrance Bushings. A substitute bushing for the one used in the momentary current test is considered to have adequate deflection capability if the substitute has equivalent strength as shown by testing in accordance with the deflection test in A5.3.

A4.1.7.3 Circuit-Breaker Primary Disconnects. A substitute material for use in the same design will be considered to have adequate flexural strength if its flexural strength (ASTM D 790-86) equals or exceeds the value of the original material.

A4.1.8 Impact Strength

A4.1.8.1 Bus Insulation. If it is desired to substitute another insulating material for the one used in the momentary current test, the substitute material will be considered to have adequate impact strength if its impact strength as measured by the falling-ball impact test described in ASTM D 3029-84 equals or exceeds the impact strength of the original material.

A4.1.8.2 Bus Support Insulation, Type 2 Barriers, and Circuit-Breaker Primary Disconnects. If it is desired to substitute another insulating material for the one used in the momentary current test, the substitute material will be considered to have adequate impact strength if its notched Izod impact strength as measured in accordance with ASTM D 256-88 equals or exceeds the impact strength of the original material.

Copyright National Electrical Manufacturers Association
Provided by IHS under license with NEMA
No reproduction or networking permitted without license from IHS
Not for Resale

A4.1.9 Creep Resistance

A4.1.9.1 Bus and Bus Tap Insulation. If this property is judged to represent a potential problem in a specific design, it shall be given special consideration when a substitute material is being evaluated.

A4.1.9.2 Circuit-Breaker Primary Disconnects. A substitute material will be judged to have acceptable creep resistance provided a bar with a span of 4 inches (102 mm) loaded to a maximum stress of 1000 pounds per square inch and tested at 105°C for 24 hours has creep equal to or less than the original material. The specimen supports, deflection-measuring device, and the weight necessary to obtain a maximum fiber stress of 1000 pounds per square inch are adequately described in ASTM D 648-82 (1988).

A4.1.10 Recognized Materials. Substitute materials recognized as NEMA Grade GPO-3, as described in paragraphs LI 1-15.07 through LI 1-15.15 of NEMA LI 1-1983, and having thermal indexes in accordance with NEMA LI 6-1983, shall be considered to be suitable for replacement of GPO-3 Type 1 or Type 2 barriers or bus support insulation without further testing. Materials recognized as NEMA Grade GPO-2 shall also be considered to be suitable for replacement of GPO-2 Type 1 or Type 2 or bus support insulation without further testing.

A4.2 Ceramic-Insulation Deflection Capability, Impact Strength, and Compressive Strength. A substitute bushing or disconnect for the one used in the momentary current test is considered to have adequate capabilities if the substitute has equivalent cantilever strength as shown by testing in accordance with the deflection test of A5.3.

A4.3 Indoor-Apparatus Insulators. A special class of bus support insulators, indoor-apparatus insulators, is available both in ceramic and nonceramic varieties. These insulators are defined and described in paragraph SG 6-31.3 of NEMA SG 6.[4]

If an indoor-apparatus insulator of a particular voltage and strength class (e.g., 15 kilovolts, A20) has been qualified by testing, another insulator recognized as being of the same voltage and strength class may be substituted without further dielectric or mechanical testing. If the substitute insulator is not ceramic, it must meet the requirements stated in A4.1.4 for flammability, in A4.1.1 for resistance to long-term aging, and in A4.1.5 for tracking resistance.

Insulators having the same height, electrical properties, and strength as indoor-apparatus insulators described in NEMA SG 6, but differing in such properties as the size, number, and location of bolt holes or the diameter of the insulating column, may be substituted for each other in accordance with this subsection.

A4.4 Composite Insulating Systems. It is recognized that a single insulating function may be performed by a composite insulating system consisting of several insulating materials. When it is desired to substitute a different material for one or more of the materials in a composite insulating system, it shall be determined which properties are required of each material in the composite system. Only those properties required of the material being replaced shall be evaluated in accordance with this Appendix.

A5. Tests

Most of the tests required in this Appendix are detailed in other standards, which are referenced under the requirements for each type and function of insulation in Section A4. Tests that are not described elsewhere are described in A5.1 through A5.3 and are referenced in the appropriate portions of Section A4.

A5.1 Thermal Cycling Withstand. Substitute insulation applied to conductors by dipping, molding, fluidized bed coating, or other process that causes the insulation to adhere to the conductor, must not be damaged by variations in temperature. Test bars with insulation applied of both original and substitute material shall be subjected to a thermal cycling test consisting of ten cycles of alternate heat and cold. Each cycle shall consist of four steps, as follows:

(1) Soak in a cold chamber at –30°C or lower for a minimum of 8 hours

(2) Remove from the cold chamber and allow to stand at room temperature for 2 hours

(3) Place in the oven at 105°C or above for 4 hours

(4) Remove from the oven and allow to stand at room temperature for 2 hours

After the tenth cycle is completed, the substitute insulation shall be as free of cracking or other physical damage as the original material.

A5.2 Deflection Capability – Bus Insulation. Copper bars 1/4 inch × 4 inches × a minimum length of 5 feet 6 inches or aluminum bars 3/8 inch × 4 inches × a minimum length of 5 feet 6 inches shall be covered with the insulating material to be investigated and the original material. The tests shall be made on the conductor material being used in the equipment. If both conductor materials are used, both must be tested. The test bars shall be supported on two cylindrical supports

Copyright National Electrical Manufacturers Association
Provided by IHS under license with NEMA
No reproduction or networking permitted without license from IHS
Not for Resale

APPENDIX

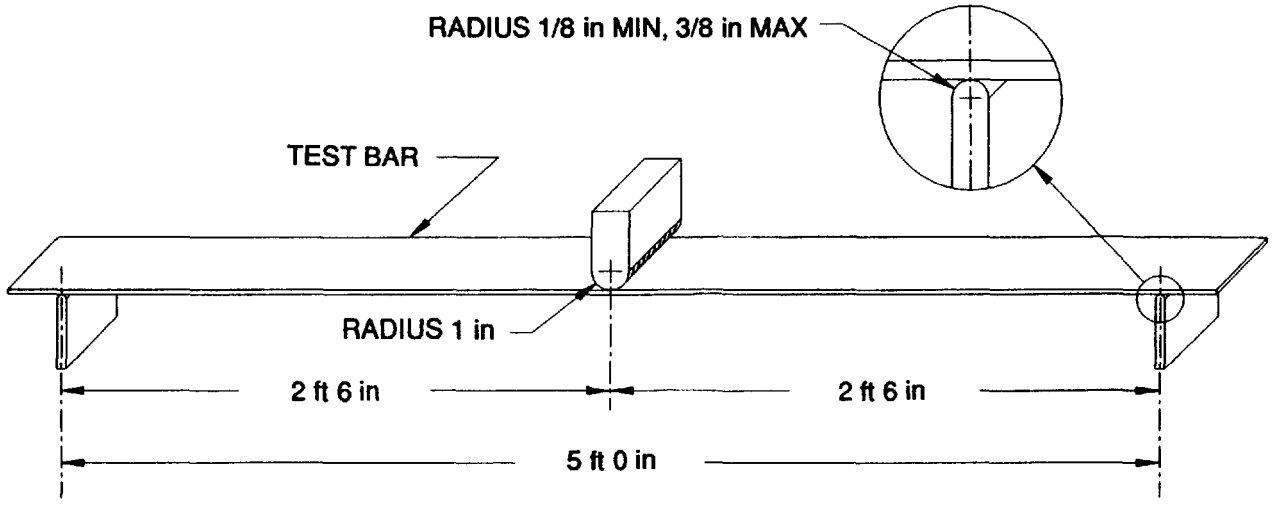

Figure A1
Bus-Insulation Deflection Test Apparatus

having a minimum radius of 1/8 inch and a maximum radius of 3/8 inch and spaced 5 feet 0 inches apart. A cylindrical loading nose having a radius of 1 inch shall be applied at the center of the span (see Figure A1) with sufficient force to deflect the test specimen 2 inches at the rate of 2 to 4 inches per minute. (If 2 inches is too great a deflection for the original qualified material to withstand, the maximum deflection shall be reduced accordingly to provide a comparative test.) The force shall then be removed at the same rate and the test specimen allowed to return to its normal position. The test specimen shall then be turned over and similarly deflected in the opposite direction. It shall be thus deflected five times in each direction, following which 1 inch in the center of the specimen shall pass a test for bus bar insulation in accordance with 5.2.1.3 (foil test) of ANSI C37.20.2-1987. The substitute material shall provide equivalent or greater performance.

A5.3 Deflection Capability – Bushings. The bushing shall be rigidly mounted with the load applied normal to the longitudinal axis of the bushing, and at the midpoint of the thread or threaded terminals, and at the terminal plate on bushings so equipped. Tests shall be applied to the inner and outer terminals of the bushing, but not simultaneously.

The specified load shall be applied for a period of one minute. After the load has been removed for one minute, the permanent deformation, measured at the inner end, shall not be greater than the deformation of the bushing used in the momentary test.

Copyright National Electrical Manufacturers Association
Provided by IHS under license with NEMA
No reproduction or networking permitted without license from IHS
Not for Resale