

ANSI C18.2M, Part 1-2001
Revision of
ANSI C18.2M, Part 1-1999

American National Standard

For Portable Rechargeable Cells and Batteries—General and Specifications

Secretariat:

National Electrical Manufacturers Association

Approved June 20, 2001

American National Standards Institute, Inc.

--`,,`-`-`,,`,,`,`,,`---

Copyright National Electrical Manufacturers Association
Provided by IHS under license with NEMA
No reproduction or networking permitted without license from IHS

Not for Resale

NOTICE AND DISCLAIMER

The information in this publication was considered technically sound by the consensus of persons engaged in the development and approval of the document at the time it was developed. Consensus does not necessarily mean that there is unanimous agreement among every person participating in the development of this document.

NEMA standards and guideline publications, of which the document contained herein is one, are developed through a voluntary consensus standards development process. This process brings together volunteers and/or seeks out the views of persons who have an interest in the topic covered by this publication. While NEMA administers the process and establishes rules to promote fairness in the development of consensus, it does not write the document and it does not independently test, evaluate, or verify the accuracy or completeness of any information or the soundness of any judgments contained in its standards and guideline publications.

NEMA disclaims liability for any personal injury, property, or other damages of any nature whatsoever, whether special, indirect, consequential, or compensatory, directly or indirectly resulting from the publication, use of, application, or reliance on this document. NEMA disclaims and makes no guaranty or warranty, express or implied, as to the accuracy or completeness of any information published herein, and disclaims and makes no warranty that the information in this document will fulfill any of your particular purposes or needs. NEMA does not undertake to guarantee the performance of any individual manufacturer or seller's products or services by virtue of this standard or guide.

In publishing and making this document available, NEMA is not undertaking to render professional or other services for or on behalf of any person or entity, nor is NEMA undertaking to perform any duty owed by any person or entity to someone else. Anyone using this document should rely on his or her own independent judgment or, as appropriate, seek the advice of a competent professional in determining the exercise of reasonable care in any given circumstances. Information and other standards on the topic covered by this publication may be available from other sources, which the user may wish to consult for additional views or information not covered by this publication.

NEMA has no power, nor does it undertake to police or enforce compliance with the contents of this document. NEMA does not certify, test, or inspect products, designs, or installations for safety or health purposes. Any certification or other statement of compliance with any health or safety–related information in this document shall not be attributable to NEMA and is solely the responsibility of the certifier or maker of the statement.

--`,,`,,`-`-`,,`,,`,`,,`---

Copyright National Electrical Manufacturers Association
Provided by IHS under license with NEMA
No reproduction or networking permitted without license from IHS
Not for Resale

AMERICAN NATIONAL STANDARD

Approval of an American National Standard requires verification by ANSI that the requirements for due process, consensus, and other criteria for approval have been met by the standards developer.

Consensus is established when, in the judgment of the ANSI Board of Standards Review, substantial agreement has been reached by directly and materially affected interests. Substantial agreement means much more than a simple majority, but not necessarily unanimity. Consensus requires that all views and objections be considered, and that a concerted effort be made toward their resolution.

The use of American National Standards is completely voluntary; their existence does not in any respect preclude anyone, whether he has approved the standards or not, from manufacturing, marketing, purchasing, or using products, processes, or procedures not conforming to the standards.

The American National Standards Institute does not develop standards and will in no circumstances give an interpretation of any American National Standard. Moreover, no person shall have the right or authority to issue an interpretation of an American National Standard in the name of the American National Standards Institute. Requests for interpretations should be addressed to the secretariat or sponsor whose name appears on the title page of this standard.

Caution Notice: This American National Standard may be revised or withdrawn at any time. The procedures of the American National Standards Institute require that action be taken periodically to reaffirm, revise, or withdraw this standard. Purchasers of American National Standards may receive current information on all standards by calling or writing the American National Standards Institute.

Published by

National Electrical Manufacturers Association
1300 North 17th Street, Rosslyn, VA 22209

© Copyright 2001 by National Electrical Manufacturers Association
All rights reserved including translation into other languages, reserved under the Universal Copyright Convention, the Berne Convention for the Protection of Literary and Artistic Works, and the International and Pan American Copyright Conventions.

No part of this publication may be reproduced in any form, in an electronic retrieval system or otherwise, without the prior written permission of the publisher.

Printed in the United States of America

--`,,`-`-`,,`,,`,`,,`---
Copyright National Electrical Manufacturers Association
Provided by IHS under license with NEMA
No reproduction or networking permitted without license from IHS
Not for Resale

This page intentionally left blank.

Copyright National Electrical Manufacturers Association
Provided by IHS under license with NEMA
No reproduction or networking permitted without license from IHS
Not for Resale

Contents

Page

Foreword v

1 General 1

1.1 Scope and objectives 1

1.2 Normative references 2

1.3 Definitions 2

1.4 Requirements 4

1.4.1 Designations, chemical systems, and voltages 4

1.4.2 Battery dimensions 5

1.4.3 Terminals 8

1.4.4 Test conditions 8

1.4.5 Performance tests 10

1.4.6 Mechanical tests 15

1.4.7 Marking 18

2 Specifications 19

2.1 Specification sheet reference 19

2.2 Battery specification sheets 21

Tables

1 Chemical systems and voltages 5

2 Measurement tolerances 9

3 Test sequence, effect of temperature during discharge on capacity delivery 11

4 Test sequence, effect of temperature during charge on capacity delivery 12

5 Discharge currents for Re measurements 13

6 Vibration test sequence 16

7 Storage recommendations 37

Copyright National Electrical Manufacturers Association
Provided by IHS under license with NEMA
No reproduction or networking permitted without license from IHS
Not for Resale

Page

Figures

1 Small cell or battery gauge (inner dimensions) 3

2A Round battery (protruding negative) 6

2B Round battery (recessed negative).....7

3 Prismatic battery.....7

Annexes

A Reliability guidelines 35

B Storage 37

C Bibliography.....39

Copyright National Electrical Manufacturers Association
Provided by IHS under license with NEMA
No reproduction or networking permitted without license from IHS
Not for Resale

Foreword (This Foreword is not part of American National Standard C18.2M, Part 1-2001.)

This standard is a revision of American National Standard for Portable Rechargeable Cells and Batteries—General and Specifications, ANSI C18.2M, Part 1-1999.

This edition of an American National Standard for Portable Rechargeable Cells and Batteries is based in part on a prior American National Standard for Sealed Rechargeable (Secondary) Nickel-Cadmium Cylindrical Bare Cells and Jacketed Batteries, ANSI C18.2M-1997, and recognizes the work of the International Electrotechnical Commission (refer to IEC Publication 285) in establishing worldwide standard requirements for portable rechargeable batteries. This edition has been expanded to include four chemistries:

Nickel-cadmium
Nickel-metal hydride
Sealed lead-acid
Lithium-ion

In April 1996, the then ANSI Accredited Standards Committee C18 on Specifications for Dry Cells and Batteries established a new general format for the publication of its standards, dividing this standard into two parts. Part 1 of this American National Standard for Portable Rechargeable Cells and Batteries contains two basic sections. The first section has general requirements and information, such as the scope, applicable definitions, general descriptions of battery dimensions, terminal requirements, marking requirements, general design conditions, test requirements, etc. Section 2 of Part 1 is comprised of specification sheets for various types of cells and batteries. **Part 2 of the standard, a separate document, contains safety requirements.**

The basic philosophical approach used in developing this standard was that of setting forth uniform test procedures that permit manufacturers' self-declaration with regard to the performance levels of their products, rather than establishing minimum acceptable performance levels.

Suggestions for the improvement of this standard will be welcome. They should be sent to the National Electrical Manufacturers Association, 1300 North 17th Street, Suite 1847, Rosslyn, VA 22209. Attention: Secretary ANSI ASC C18.

This standard was processed and approved for submittal to ANSI by the American National Standards Committee C18 on Portable Cells and Batteries. Committee approval of this standard does not necessarily imply that all committee members voted for its approval. When Committee C18 approved this standard, it had the following members:

Michael H. Babiak, Chairperson
James C. DeJager, Vice Chairperson
Ronald R. Runkles, Secretary

Organization Represented:	*Name of Representative:*
Consultant	David Linden
Consultant, U.S. Navy	Albert Himy
Duracell	S. Keel Kelly Steven Wicelinski (Alt.)
Eastman Kodak Company	James C. DeJager Jaroslaw Petryk (Alt.) David Gaudioso (Alt.)

--`,,`-`-`,,`,,`,`,,`---
Copyright National Electrical Manufacturers Association
Provided by IHS under license with NEMA
No reproduction or networking permitted without license from IHS
Not for Resale

Energizer	Michael H. Babiak Marc K. Boolish (Alt.)
MolTech Power Systems	Nate M. Banes Ramesh V. Shah
Photographic & Imaging Association	John Gignac
Rayovac Corp.	John Hadley Denis Carpenter (Alt.)
U.S. Navy, Crane Division, Naval Surface Warfare Center	James Gucinski John Inman (Alt.)
Wilson Greatbatch Limited	Paul W. Krehl

The members of Subcommittee C18-2 on Portable Rechargeable Batteries who contributed to the development of this standard are:

Ramesh V. Shah, Chairperson
Michael H. Babiak, Vice Chairperson
Ronald R. Runkles, Secretary

Marc Boolish
Denis Carpenter
James C. DeJager
John M. Evjen
James Gucinski
John Hadley
Albert Himy
John Inman
Denis Carpenter
S. Keel Kelly
David Linden
Steven Wicelinski

Copyright National Electrical Manufacturers Association
Provided by IHS under license with NEMA
No reproduction or networking permitted without license from IHS
Not for Resale

For Portable Rechargeable Cells and Batteries— General and Specifications

1 General

NOTE—Part 1 does not include safety requirements, which can be found in Part 2.

1.1 Scope and objectives

1.1.1 Scope

This publication applies to portable rechargeable, or secondary, cells and batteries[1] based on the following electrochemical systems:

a) Nickel-cadmium
b) Nickel-metal hydride
c) Sealed lead-acid[2]
d) Lithium-ion

Section 1 of this standard contains general information and all standardized performance and mechanical tests upon which all the specifications in Section 2 are based.

Section 2 specification sheets list those tests and requirements described herein that are required for each battery. Not all tests in Section 1 are necessarily required on every specification sheet.

Part 2 of this standard describes all safety tests and requirements.

1.1.2 Purpose

The purpose of this publication is:

a) To ensure the electrical and physical interchangeability of products from different manufacturers;
b) To minimize proliferation of cell and battery types;
c) To define standard performance tests and provide guidance for their assessment; and
d) To provide guidance to consumers, manufacturers, and designers.

This is achieved by specifying designations, dimensions, polarity, terminals, marking, test conditions, and procedures.

[1] Unless otherwise noted, the word “battery” is used to refer to either cell or battery or both in the remainder of this document.
[2] “Sealed lead-acid” is the commonly accepted descriptor, although technically these batteries are not completely sealed.

Copyright National Electrical Manufacturers Association
Provided by IHS under license with NEMA
No reproduction or networking permitted without license from IHS Not for Resale

1.2 Normative references

The following standards contain provisions that, through reference in this text, constitute provisions of this American National Standard. At the time of publication, the editions indicated were valid. All standards are subject to revision, and parties to agreements based on this American National Standard are encouraged to investigate the possibility of applying the most recent editions of the standards indicated below.

ANSI ASME Y14.5M-1994, *Dimensioning and Tolerancing*

ANSI C18.2M, Part 2-1999, *Portable Rechargeable Cells and Batteries—Safety Standard*

1.3 Definitions

The following definitions shall apply in this standard:

1.3.1 application test: A test which simulates the actual use of a battery in a specific application.

1.3.2 battery: One or more cells, including case, terminals, and markings.

1.3.3 battery, button: Small round battery, in which the overall height is less than the diameter.

1.3.4 battery, portable: A battery that is easily carried.

1.3.5 battery, primary: A battery that is not designed to be recharged.

1.3.6 battery, prismatic: A battery with non-round geometry.

1.3.7 battery, round: Cylindrical battery, the overall height of which is greater than or equal to its diameter.

1.3.8 battery, secondary (rechargeable): A battery that is designed to be recharged.

1.3.9 capacity: Quantity of electricity, usually expressed in Ampere-hours (Ah), which a battery can deliver under specified discharge conditions.

1.3.10 capacity, application: The capacity delivery that is declared by the manufacturer as the minimum to be expected in accordance with 1.4.5.3.

1.3.11 capacity, rated (C_5): The capacity that is declared by the manufacturer as the minimum to be expected in accordance with 1.4.5.2. C_5 is the capacity at the 5-hour rate.

1.3.12 capacity retention: The capability of a battery to retain capacity on open circuit under specified conditions.

1.3.13 cell: Basic functional unit providing a source of electrical energy by direct conversion of chemical energy. The cell consists of an assembly of electrodes, separators, electrolyte, container, and terminals.

1.3.14 cell, cylindrical: A cell in the shape of a cylinder, the overall height of which is greater than its diameter.

1.3.15 cell, rechargeable (secondary): A cell that is designed to be recharged.

Copyright National Electrical Manufacturers Association
Provided by IHS under license with NEMA
No reproduction or networking permitted without license from IHS
Not for Resale

1.3.16 current, charge: The current expressed in amperes delivered to a battery during charge.

1.3.17 current, discharge (discharge rate): The current expressed in amperes delivered by a battery during discharge.

1.3.18 current, end-of-charge: Specified minimum current, during charging at a specified constant voltage, when a battery is considered completely charged and charge can be terminated.

1.3.19 current, maximum-charge: Specified current that a cell or battery can be exposed to during constant voltage charge for optimum performance and safety.

1.3.20 cycle life: The number of cycles, consisting of a discharge, a charge, and rest periods, under specified conditions, that a rechargeable battery can undergo before failing to meet its specified end-of-life capacity or voltage under load.

1.3.21 discharge: An operation during which a battery delivers power (current and voltage) to an external circuit by the conversion of chemical energy into electrical energy.

1.3.22 effective internal resistance (R_e): The apparent opposition to current flow within a cell or battery that manifests itself as a drop in voltage proportional to the discharge current; its value depends on battery design, state of charge, temperature, and age.

1.3.23 polarity: The electrical convention used to describe the direction in which current flows on discharge.

1.3.24 rated: Declared value for a specific property or operating condition.

1.3.25 small cell or battery: A cell or battery fitting within the limits of the truncated cylinder as defined in Figure 1.

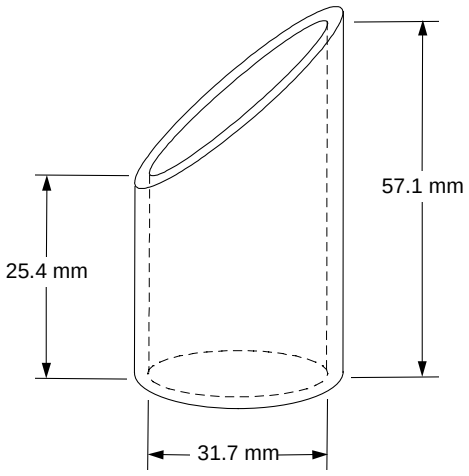

Figure 1 – Small cell or battery gauge (inner dimensions)

1.3.26 terminals: Accessible conductive parts provided for the connection of an external circuit to the positive (+) and negative (-) electrodes of the cell or battery.

Copyright National Electrical Manufacturers Association
Provided by IHS under license with NEMA
No reproduction or networking permitted without license from IHS
Not for Resale

1.3.27 voltage, end-of-charge: The voltage at the end of a charge period prior to removal of the charge current.

1.3.28 voltage, end-of-discharge (EODV): The specified voltage of a battery, when supplying power, at which the discharge is terminated.

1.3.29 voltage, maximum-charge: Specified voltage that a cell or battery can be exposed to during constant voltage charge for optimum performance and safety.

1.3.30 voltage, mid-discharge: The voltage of a cell or battery under defined conditions at the point of time half way between the beginning and end of discharge (t/2).

1.3.31 voltage, nominal: Suitable approximate value used to designate or identify the voltage of a cell, battery, or electrochemical system.

1.3.32 voltage, open circuit (OCV): The voltage of a battery when no current is flowing.

1. 4 Requirements

1.4.1 Designations, chemical systems, and voltages

1.4.1.1 Designations

Secondary batteries shall be designated by a number, followed by a letter, followed by a sequential number. The first number shall designate the nominal voltage of the battery. It is derived by multiplying the number of series connected secondary cells, which make up the battery, by the nominal cell voltage. The letter shall designate the electrochemical system, therefore,

H = nickel-metal hydride
I = lithium-ion
K = nickel-cadmium
P = lead-acid

The number that follows the letter is sequentially assigned by ANSI according to the following priorities: (1) physical dimensions, (2) terminal configurations, and (3) performance variables.

Examples: 4.8K27 (four nickel-cadmium cells)
2.4H38 (two nickel-metal hydride cells)

--`,,`-`-`,,`,,`,`,,`---

Copyright National Electrical Manufacturers Association
Provided by IHS under license with NEMA
No reproduction or networking permitted without license from IHS Not for Resale

1.4.1.2 Chemical systems and voltages

Chemical systems and voltages are given below in Table 1.

Table 1 – Chemical systems and voltages

Chemical System	Positive Electrode	Electrolyte	Negative Electrode	Nominal Voltage (V)
Nickel-cadmium (K)	Nickel oxides	Potassium hydroxide	Cadmium	1.2
Nickel-metal hydride (H)	Nickel oxides	Potassium hydroxide	Metal hydride	1.2
Lithium-ion (I)	Lithium cobalt dioxide	Liquid organic with lithiated salt additive	Carbon	3.6
Sealed lead-acid (P)	Lead oxide	Sulfuric acid	Lead	2.0

1.4.2. Battery dimensions

In some cases, a battery is adequately defined by two or three linear dimensions. For some batteries, it is necessary to describe the battery in greater detail by specifying additional battery dimensions. Asymmetry of battery shape or terminals enables the compartment to be designed so that batteries can be inserted only with the correct orientation.

1.4.2.1 Dimension symbols

Symbols denoting various dimensions for cylindrical cells and batteries are as follows (note that some of the symbols and terms are defined in the following section):

A maximum overall height of the battery
B minimum distance between the flats of the positive and negative terminals
C minimum outer diameter of the flat surface of the negative terminal
E maximum recess of the flat surface of the negative terminal
F maximum diameter of the positive terminal within the specified projection height
G minimum projection height of the flat surface of the positive terminal
K minimum projection of the flat surface of the negative terminal
L maximum diameter of the negative terminal within the specified projection height
M minimum diameter of the flat surface of the negative contact
Ⓜ maximum material condition
N minimum diameter of the flat surface of the positive terminal
∅ maximum and minimum diameters of the battery
⊕ true position
P datum feature
T positional tolerance of the positive terminal

Copyright National Electrical Manufacturers Association
Provided by IHS under license with NEMA
No reproduction or networking permitted without license from IHS
Not for Resale

1.4.2.2 Dimension definitions

1.4.2.2.1 datum: A theoretically exact point, axis, or plane derived from the true geometric counterpart of a specified datum feature. A datum is the origin from which the location or geometric characteristics of features of a part are established.

1.4.2.2.2 datum feature: An actual feature of a part used to establish a datum.

1.4.2.2.3 datum feature symbol: The symbol used to identify an actual part feature to serve as a datum feature. An example of a datum feature symbol would be "P."

1.4.2.2.4 maximum material condition: The condition in which a feature of given size contains the maximum amount of material within the stated limits of size, for example, minimum hole diameter, maximum shaft diameter.

1.4.2.2.5 positional tolerance: A positional tolerance defines a zone within which the center, axis, or center plane of a feature of given size is permitted to vary from a true position.

1.4.2.2.6 true position: The theoretically exact position defined by basic dimensions about which a positional tolerance zone is centered. The true position corresponds to the desired exact location for a feature. Refer to ANSI/ASME Y14.5M.

1.4.2.3 Basic shapes of batteries

Examples of basic battery shapes, including dimension symbols, are given below in Figure 2 and Figure 3.

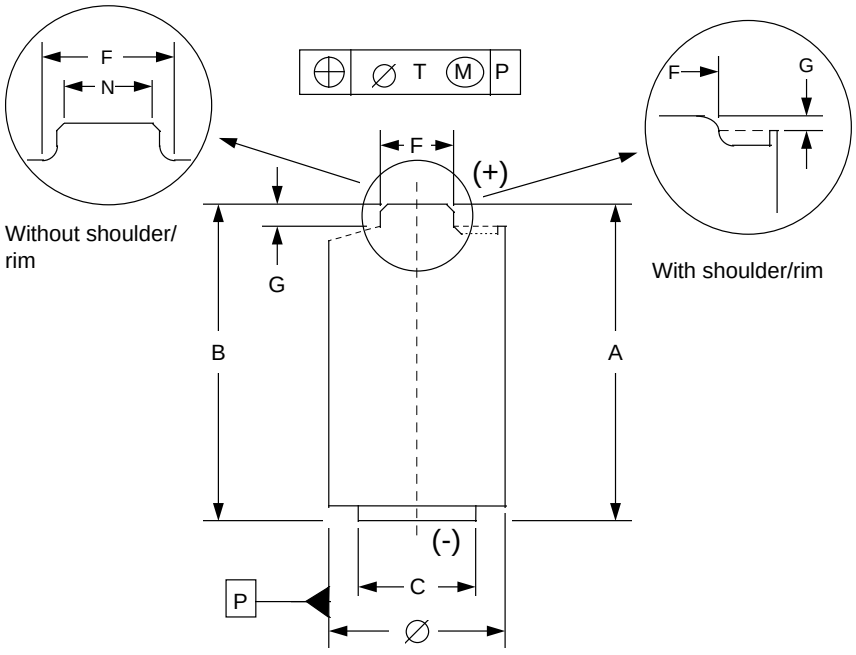

Figure 2A – Round battery (protruding negative)

Copyright National Electrical Manufacturers Association
Provided by IHS under license with NEMA
No reproduction or networking permitted without license from IHS
Not for Resale

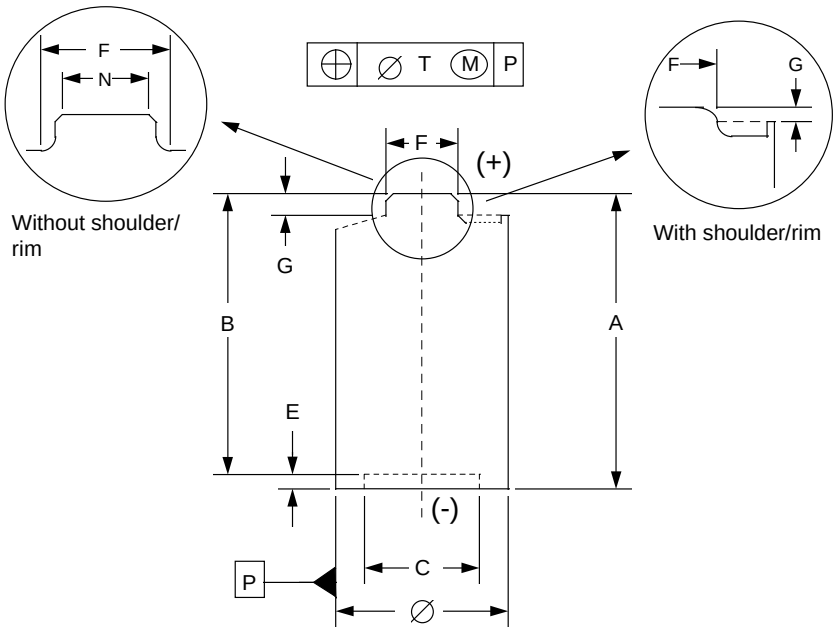

Figure 2B – Round battery (recessed negative)

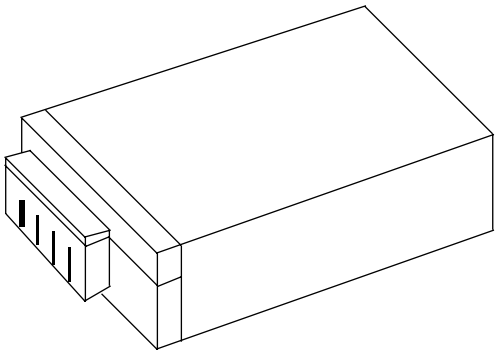

Note--Dimensions are given in Section 2.2
of this document (Part 1).

Figure 3 – Prismatic battery

Copyright National Electrical Manufacturers Association
Provided by IHS under license with NEMA
No reproduction or networking permitted without license from IHS
Not for Resale

1.4.3 Terminals

Refer to the specification sheets in Section 2.2 (Part 1) for detailed information pertaining to terminals.

1.4.3.1 Cap and base

This type of terminal is used for cylindrical batteries that have the cylindrical side insulated from the terminals. The metal cap on the center electrode and the bottom of the battery serve as the terminals.

1.4.3.2 Snap

This type of terminal consists of a stud for the positive terminal and a socket for the negative terminal. These shall be made from nickel-plated steel or other suitable material. They shall be designed to provide a secure physical and electrical connection when fitted with similar corresponding parts for connection to an electrical circuit.

1.4.3.3 Slide contacts—flat-plate, recessed, exterior contacts

Contacts are typically arranged in a multiple array. Slide contact terminals include the negative and positive connections. In addition, when applicable, connections for the thermistor, thermal fuse, or other functions may be present. These exterior slide contacts are usually made of plated steel or other suitable material, and they may have different sizes and shapes.

1.4.3.4 Plug-in connectors

This type of terminal shall consist of a suitable assembly of metal contacts, mounted in an insulating housing or holder and adapted to receive corresponding contacts of a mating plug in such a manner as to ensure good electrical connection and proper voltage/form factor polarization.

1.4.4 Test conditions

1.4.4.1 Environmental conditions

Unless otherwise specified, all tests are to be conducted at standard temperature and relative humidity.

1.4.4.1.1 Standard temperature

The temperature shall be 21 ± 2°C, unless otherwise specified. During short periods only, the temperature may deviate from these limits without exceeding 21 ± 5°C.

1.4.4.1.2 Standard relative humidity

The relative humidity shall be between 35% and 65%, unless otherwise specified.

1.4.4.2 Measurement tolerances

Measurement tolerances are given in Table 2. These tolerances comprise the combined accuracy of the measuring instruments, measurement techniques used, and all other sources of error in the test procedure.

--`,,`-`-`,,`,,`,`,,`---

Copyright National Electrical Manufacturers Association
Provided by IHS under license with NEMA
No reproduction or networking permitted without license from IHS
Not for Resale

Table 2 – Measurement tolerances

Parameter	Tolerance
Voltage	± 1%
Current	± 1%
Capacity	± 1%
Temperature	± 2°C
Time	± 0.1%

1.4.4.3 Standard charge method

The specification sheet specifies which of the following charge methods is to be used for assessing performance in this standard. Prior to charging, discharge per 1.4.4.5.

1.4.4.3.1 Constant current, method 1

Charge at 0.1 C_5 amperes for 20 hours.

Current is frequently expressed in multiples of the value C_5, which is the rated capacity of the cell as stated by the manufacturer. For example, 0.1 C_5 amperes designates that the value of the current in amperes is 0.1 times the numerical value of the rated capacity in ampere-hours.

1.4.4.3.2 Constant current, method 2

Charge at the constant current value given on the specification sheet until the battery is transitioning from charge to overcharge, followed by 0.1C_5 amperes for an additional one hour. The transition from charge to overcharge is to be indicated by one of the typically used criteria such as temperature, negative delta voltage, delta temperature/delta time, voltage inflection (second derivative of voltage), or delta temperature. The criteria to be used in a specific test are given on the specification sheet.

1.4.4.3.3 Constant voltage

Charge at the constant voltage value given on the specification sheet. The charger shall limit the current flow to the maximum charge current given on the specification sheet. Terminate the charge at the end of the time given on the specification sheet.

1.4.4.3.4 Constant voltage, terminated at specified current

Charge at the constant voltage value given on the specification sheet. The charger shall limit the current flow to the maximum charge current given on the specification sheet. Terminate the charge when the charge current has diminished to the value given on the specification sheet.

1.4.4.4 Standard rest

The rest time between charge and discharge shall be one hour, unless otherwise specified.

1.4.4.5 Standard discharge method

The specification sheet specifies which of the following discharge methods is to be used for assessing performance in this standard.

Copyright National Electrical Manufacturers Association
Provided by IHS under license with NEMA
No reproduction or networking permitted without license from IHS
Not for Resale

1.4.4.5.1 Discharge at 0.2 C_5 amperes

The battery shall be discharged at a constant current value of 0.2 C_5 amperes to the end of discharge voltage (EODV) given on the specification sheet.

1.4.4.5.2 Discharge at application rate

The battery shall be discharged at the application rate given on the specification sheet, to the end of discharge voltage (EODV) given on the specification sheet.

1.4.5 Performance tests

1.4.5.1 Conditions for acceptance (capacity delivery)

The following conditions shall apply for acceptance, where appropriate, when subjected to the tests given on the specification sheets:

Rated capacity of the battery:

The manufacturer shall establish the capacity rating of the battery based on the performance of the battery at a discharge rate of 1 ampere at 20° C, as described in paragraph 1.4.5.3

Acceptance criteria:

In order to meet the requirements of this standard, the average of the results of all samples tested shall be equal to or greater than the value for application capacity declared by the manufacturer, with no individual test result below 80% of that value.

Repeat tests:

If the test results do not meet the conditions given in “acceptance criteria” above, the tests may be re-run provided that, on any test, no more than one test result falls below the specified 80%.

Alternative method of acceptance:

As an alternative, the manufacturer may lower the capacity rating of the battery, so that the test results meet the conditions specified under “acceptance criteria” given above.

1.4.5.2 Rated capacity

Charge the battery using the applicable method in 1.4.4.3, as given on the specification sheet. Perform standard discharge per 1.4.4.5.1. The delivered capacity shall be greater than or equal to the rated capacity declared by the battery manufacturer. If the resultant capacity delivered is lower than the rated capacity, then the charge and discharge may be repeated until the resultant capacity is greater or equal to the rated capacity. A total of five cycles is permitted to demonstrate compliance.

1.4.5.3 Application capacity

Charge the battery using the applicable method in 1.4.4.3, as given on the specification sheet. Discharge at the application rate in 1.4.4.5.2 to the EODV, also as given on the specification sheet. The delivered capacity shall be greater than or equal to the application capacity declared by the battery manufacturer. If the resultant capacity delivered is lower than the rated capacity, then the charge and discharge may be repeated until the resultant capacity is greater or equal to the rated capacity. A total of five cycles is permitted to demonstrate compliance.

Copyright National Electrical Manufacturers Association
Provided by IHS under license with NEMA
No reproduction or networking permitted without license from IHS Not for Resale

1.4.5.4 Effect of discharge rate on capacity delivery

Using the applicable charge method from 1.4.4.3, as given on the specification sheet, perform four charge/discharge cycles where the discharge rate is 0.05 C_5 amperes for the first cycle, 0.2 C_5 amperes for the second cycle, 1.0 C_5 amperes rate for the third cycle, and 5.0 C_5 amperes for the fourth cycle.

NOTE—To better define capacity as influenced by discharge rate for batteries with limited high-rate capability, it may be useful to consider additional discharge rates greater than 1.0 C_5 amperes, but less than 5.0 C_5 amperes.

1.4.5.5 Effect of temperature during discharge on capacity delivery

Perform three charge/discharge cycles using the test sequence given in Table 3.

Table 3 – Test sequence, effect of temperature during discharge on capacity delivery

OPEN CIRCUIT REST		CHARGE			OPEN CIRCUIT REST		DISCHARGE		
TEMP (°C)	TIME (h)	TEMP (°C)	RATE	Termi-nation	TEMP (°C)	TIME (h)	TEMP (°C)	RATE	Termi-nation
21	4-16	21	1.4.4.3 & SS	1.4.4.3 & SS	-20	4	-20	0.2 C_5 A or Applica-tion Rate per SS	EODV Per SS
21	4-16	21	1.4.4.3 & SS	1.4.4.3 & SS	21	1	21	0.2 C_5 A or Applica-tion Rate per SS	EODV Per SS
21	4-16	21	1.4.4.3 & SS	1.4.4.3 & SS	50	1	50	0.2 C_5 A or Applica-tion Rate per SS	EODV Per SS

NOTE—"SS" indicates information to be obtained from specification sheet.

Copyright National Electrical Manufacturers Association
Provided by IHS under license with NEMA
No reproduction or networking permitted without license from IHS
Not for Resale

1.4.5.6 Effect of temperature during charge on capacity delivery

Perform three charge/discharge cycles using the test sequence given in Table 4.

Table 4 – Test sequence, effect of temperature during charge on capacity delivery

OPEN CIRCUIT REST		CHARGE			OPEN CIRCUIT REST		DISCHARGE		
TEMP (°C)	TIME (h)	TEMP (°C)	RATE	Termi-nation	TEMP (°C)	TIME (h)	TEMP (°C)	RATE	Termi-nation
10	4-16	10	1.4.4.3 & SS	1.4.4.3 & SS	21	4	21	0.2 C_5 A or Applica-tion Rate per SS	EODV Per SS
21	4-16	21	1.4.4.3 & SS	1.4.4.3 & SS	21	4	21	0.2 C_5 A or Applica-tion Rate per SS	EODV Per SS
45	4-16	45	1.4.4.3 & SS	1.4.4.3 & SS	21	4	21	0.2 C_5 A or Applica-tion Rate per SS	EODV Per SS

NOTE—"SS" indicates information to be obtained from specification sheet.

1.4.5.7 Capacity retention

Charge the battery using the applicable charge method in 1.4.4.3, as given on the specification sheet. Immediately place the battery into storage for 28 days at the standard temperature given in 1.4.4.1.1. At the end of the 28 days, perform the standard discharge per 1.4.4.5.

1.4.5.8 Effective internal resistance (Re)

The effective internal resistance of a battery shall be measured as follows:

Charge: Charge the battery using the method from 1.4.4.3, as given on the specification sheet.

Rest: Rest the battery using the method from 1.4.4.4.

Discharge: Discharge at a constant current value of I_1, as specified in Table 5. At the end of a discharge period specified in Table 5, the discharge voltage V_1 under load shall be measured and recorded. The discharge current shall then be immediately decreased to I_2, as specified in Table 5. The maximum battery voltage after switching to I_2 shall be recorded as V_2. The discharge may be terminated after V_2 has been defined.

The effective internal resistance (Re) shall then be calculated as follows:

$$R_e = (V_2 - V_1)/(I_1 - I_2)$$

Copyright National Electrical Manufacturers Association
Provided by IHS under license with NEMA
No reproduction or networking permitted without license from IHS
Not for Resale

The measured R_e must meet the requirement given on the specification sheet. The specification sheet must also state if the battery is capable of high rate discharge.

Table 5 – Discharge currents for Re measurements

Discharge Current	High Rate Capable Batteries	Batteries Not High Rate Capable
I_1	10 C_5 amperes for 1 minute	1 C_5 amperes for 10 minutes
I_2	1 C_5 amperes	0.1 C_5 amperes

1.4.5.9 Internal impedance

Apply an alternating current, I_a, at the frequency of 1.0 kHz ± 0.1 kHz for a period of 1 second to 5 seconds and measure the rms voltage, V_a. The alternating current should be chosen at a value that keeps the voltage below 20 mV. The measurement is to be made with the battery fully charged as per 1.4.4.3 and as given on the specification sheet.

The internal impedance, R_{ac}, is given by:

$$R_{ac} = V_a / I_a$$

1.4.5.10 Cycle life

The cycle life of the battery is to be tested by repeatedly charging and discharging the battery as described below. The capability of the battery is the number of cycles obtained before the capacity or the voltage falls below the values specified below.

Charge: Charge the battery using the applicable charge method from 1.4.4.3, as given on the specification sheet.

Rest: 30 Minutes.

Discharge: C_5 rate to EODV given on specification sheet.

Rest: 30 Minutes.

The test is completed when performance drops below 60% of rated capacity, or the mid-discharge voltage drops below 80% of the nominal voltage per specification sheets.

The number of cycles completed shall not be less than those given on the specification sheets.

1.4.5.11 Extended charging at standard temperature

The ability of a battery to withstand extended charging time shall be tested by repeatedly placing on charge for one month intervals and discharging, as described below. The extended charge capability of the battery is the cumulative time obtained before the capacity delivery falls below the value specified below.

Charge: Charge at standard temperature given in 1.4.4.1.1 with the method and at the level of the current or voltage given on the specification sheet for one month.

Copyright National Electrical Manufacturers Association
Provided by IHS under license with NEMA
No reproduction or networking permitted without license from IHS
Not for Resale

Discharge: Discharge the battery using the method from 1.4.4.5 or as given on the specification sheet.

The test is completed when the capacity drops below 60% of rated capacity, or the mid-discharge voltage drops below 80% of the nominal voltage.

The extended charging capability shall meet the requirements given on the specification sheet.

1.4.5.12 Storage test

The long term storage capability of the battery shall be tested by storing in an open circuit condition. The state of charge at the beginning of the storage shall be either fully charged, or fully discharged as given on the specification sheet. During the storage period, the temperature shall not at any time fluctuate outside of the specified temperature by more than ± 5°C.

Preferred storage condition: Mean temperature of 21°C for one year. This is the preferred method for measuring this characteristic because it more nearly represents actual field storage conditions.

Alternate storage condition: Mean temperature of 60°C for 30 days. This method is only useful at giving an early indication of the ability of the battery to successfully withstand extended storage. This is considered to be an accelerated test that may or may not provide results indicative of room temperature storage.

At the completion of the storage time, the battery is to be stabilized at 21°C for at least four hours. The battery shall then be charged and discharged to measure its ability to delivery capacity after the storage. The charge and discharge are to be conducted as follows.

Charge: Charge the battery using the method from 1.4.4.3.

Rest: Rest the battery using the method from 1.4.4.4.

Discharge: Discharge the battery using the method from 1.4.4.5.

The capacity delivery must meet the requirement given on the specification sheet.

1.4.5.13 Charge efficiency

Start with a fully discharged battery and charge using the applicable charge method from 1.4.4.3, as given on the specification sheet for a period of time calculated to provide a charge input equal to 80% of the rated capacity.

Rest: 30 minutes.

Discharge: Discharge the battery using the method from 1.4.4.5.

Repeat the above procedure for a second time. The charge efficiency shall be calculated for the second cycle by dividing the actual capacity delivered by the actual charge input.

1.4.5.14 Overdischarge Performance

The overdischarge performance of the battery shall be measured as follows:

Discharge: Discharge the battery using a fixed (constant) resistance, corresponding to 0.5 C_5 amperes discharge current for 24 hours.

Copyright National Electrical Manufacturers Association
Provided by IHS under license with NEMA
No reproduction or networking permitted without license from IHS Not for Resale

Rest: Rest 30 days with the battery at open circuit.

Charge: Charge the battery using the method from 1.4.4.3 for 24 hours.

Rest: Rest the battery using the method from 1.4.4.4.

Discharge: Discharge the battery using the method from 1.4.4.5.2.

The capacity delivery must meet the requirement given on the specification sheet.

1.4.6 Mechanical tests

1.4.6.1 Shock test

The ability of a battery to withstand mechanical shock and continue to perform shall be confirmed by means of a shock test carried out as follows.

Charge: Charge the battery using the method from 1.4.4.3, as given on the specification sheet.

Rest: Rest at open circuit for a minimum of four hours.

Ambient Temperature: 21 ± 5°C.

Record: Record the open circuit voltage.

Mechanical shock shall be applied along each of three mutually perpendicular directions. The shock pulses shall be one-half sine, with a peak acceleration of 125 to 175 Gs, and an average acceleration of 75 Gs for the first three milliseconds.

Rest: Rest the battery at open circuit for a minimum of one hour. Perform post-test visual examination and measure and record the OCV.

The battery shall then be charged and discharged to measure its ability to deliver capacity after the shock test. The charge and discharge are to be conducted as follows:

Charge: Charge the battery using the method from 1.4.4.3, as given on the specification sheet.

Rest: Rest the battery using the method from 1.4.4.4.

Discharge: Discharge the battery using the method from 1.4.4.5.

The capacity delivery must meet the requirement given on the specification sheet.

There shall be no distortion beyond the dimensions specified for the battery in Section 2.2 (Part 1).

1.4.6.2 Vibration test

The ability of a battery to withstand mechanical vibration and continue to perform shall be confirmed by means of a vibration test carried out at 21 ± 5°C.

A simple harmonic motion shall be applied to the battery having an amplitude of 0.76 mm, with a total maximum excursion of 1.52 mm. The frequency shall be varied at the rate of 1 Hertz per minute between the limits of 10 and 55 Hertz. The entire range of frequencies (10 to 55 Hertz)

Copyright National Electrical Manufacturers Association
Provided by IHS under license with NEMA
No reproduction or networking permitted without license from IHS Not for Resale

and return (55 to 10 Hertz) shall be traversed in 90 ± 5 minutes for each mounting position (direction of vibration).

Charge: Charge the battery using the method from 1.4.4.3, as given on the specification sheet.

Rest: Rest at open circuit for a minimum of four hours.

Record: Record the open circuit voltage.

Apply the vibration specified (above) in the sequence provided in Table 6.

Table 6 – Vibration test sequence

Step	Storage Time	Battery Orientation	Vibration Time	Visual Examination
1	---	---	---	Pre-test
2	---	See note.	90 ± 5 min	---
3	---	See note.	90 ± 5 min	---
4	---	See note.	90 ± 5 min	---
5	1 hour	---	---	Post-test

NOTE—The vibration shall be applied in each of three mutually perpendicular directions, unless the sample only has two axes of symmetry, in which case only two directions shall be tested.

Rest: Rest the battery at open circuit for a minimum of one hour. Perform post-test visual examination and measure and record the OCV.

The battery shall then be charged and discharged to measure its ability to deliver capacity after the vibration test. The charge and discharge are to be conducted as follows:

Charge: Charge the battery using the method from 1.4.4.3.

Rest: Rest the battery using the method from 1.4.4.4.

Discharge: Discharge the battery using the method from 1.4.4.5.

The capacity delivery must meet the requirement given on the specification sheet.

There shall be no distortion beyond the dimensions specified for the battery in 2.2, Part 1.

1.4.6.3 Drop test (free fall)

The ability of a battery to be dropped and continue to perform shall be confirmed by means of a drop test carried out as follows:

Charge: Charge the battery using the method from 1.4.4.3.

Rest: Rest at open circuit for a minimum of four hours.

Record: Record the open circuit voltage (OCV).

Copyright National Electrical Manufacturers Association
Provided by IHS under license with NEMA
No reproduction or networking permitted without license from IHS Not for Resale

The free fall shall be conducted by dropping the battery from a height of one meter to a concrete surface. The battery shall be dropped three times, with orientation originating one time in each of the three mutually perpendicular axes.

Rest: Rest the battery at open circuit for one hour. Perform post-test visual examination and measure and record the OCV.

The battery must meet the requirements given on the specification sheet.

The battery shall then be charged and discharged to measure its ability to deliver capacity after the drop test. The charge and discharge are to be conducted as follows:

Charge: Charge the battery using the method from 1.4.4.3.

Rest: Rest the battery using the method from 1.4.4.4.

Discharge: Discharge the battery using the method from 1.4.4.5.

The capacity delivery must meet the requirements given on the specification sheet.

1.4.6.4 Terminal endurance test

The ability of the battery to withstand repeated insertion and withdrawal operations of its connection mechanism and continue to perform shall be confirmed by the following test:

Charge: Charge the battery using the method from 1.4.4.3.

Rest: Rest at open circuit for a minimum of four hours.

Record: Record the open circuit voltage.

Connect and disconnect the battery 400 times using its normal connection mechanism.

Rest the battery at open circuit for one hour. Perform post-test visual examination and measure and record the OCV.

The battery shall then be charged and discharged to measure its ability to deliver capacity after the terminal endurance test. The charge and discharge are to be conducted as follows:

Charge: Charge the battery using the method from 1.4.4.3.

Rest: Rest the battery using the method from 1.4.4.4.

Discharge: Discharge the battery using the method from 1.4.4.5.

The capacity delivery must meet the requirement given on the specification sheet.

1.4.6.5 Thermal shock test

The ability of the battery to withstand thermal shock and continue to perform shall be confirmed by the following test:

Charge: Charge the battery using the method from 1.4.4.3.

Rest: Rest at open circuit for a minimum of four hours.

Copyright National Electrical Manufacturers Association
Provided by IHS under license with NEMA
No reproduction or networking permitted without license from IHS
Not for Resale

Record: Record the open circuit voltage.

Subject the batteries to four cycles of temperature shock according to the following regime: Place batteries in a -40 ± 2°C chamber for two hours. Remove batteries and place in a 70 ± 2°C chamber for two hours. The transition time between chambers shall be no greater than five minutes. One cycle consists of exposure to both temperatures.

Rest: Rest the battery at open circuit for a minimum of one hour. Perform post-test visual examination and measure and record the OCV.

The battery shall then be charged and discharged to measure its ability to deliver capacity after the thermal shock test. The charge and discharge are to be conducted as follows:

Charge: Charge the battery using the method from 1.4.4.3.

Rest: Rest the battery using the method from 1.4.4.4.

Discharge: Discharge the battery using the method from 1.4.4.5.

The capacity delivery must meet the requirement given on the specification sheet.

1.4.7 Marking

1.4.7.1 General

At least the following items shall be marked on the battery or package:

a) Designation
b) Polarity of terminal (when applicable)
c) Name or trade mark of the manufacturer or supplier
d) Battery electrochemical system
e) Nominal voltage
f) Year, month, week, or day of manufacture, which may be coded, or the expiration date
g) Warnings or cautionary notes, where applicable
h) Caution for ingestion (small batteries only)
i) Recycle mark (where regulations apply)

1.4.7.2 Small size batteries

When this subclause is invoked on the individual specifications sheet, items b), c), and d) shall be marked on the battery. Items a), e), f), g), h), and i) may be given on the immediate packing instead of on the battery.

Note—Batteries that are considered “small” are so noted on the individual battery specification sheets in 2.2 (Part 1).

Copyright National Electrical Manufacturers Association
Provided by IHS under license with NEMA
No reproduction or networking permitted without license from IHS Not for Resale

2 Specifications

2.1 Specification sheet reference

ANSI Number	IEC Designation	Common Designation	Volts	Chemistry	Page
1.2K1	KR03	AAA	1.2	Nickel-cadmium	22
1.2H1	---	AAA	1.2	Nickel-metal hydride	22
1.2K2	KR6	AA	1.2	Nickel-cadmium	22
1.2H2	---	AA	1.2	Nickel-metal hydride	22
1.2K3	KR14	C	1.2	Nickel-cadmium	22
1.2H3	---	C	1.2	Nickel-metal hydride	22
1.2K4	KR20	D	1.2	Nickel-cadmium	22
1.2H4	---	D	1.2	Nickel-metal hydride	22
7.2K5	---	9 Volt	7.2	Nickel-cadmium	28
7.2H5	---	9 Volt	7.2	Nickel-metal hydride	28
8.4K5	---	9 Volt	8.4	Nickel-cadmium	28
8.4H5	---	9 Volt	8.4	Nickel-metal hydride	28
1.2K6	KR 11/45	AAA	1.2	Nickel-cadmium	24
1.2H6	HR 11/45	AAA	1.2	Nickel-metal hydride	24
1.2K7	---	5/4 AAA	1.2	Nickel-cadmium	24
1.2H7	---	5/4 AAA	1.2	Nickel-metal hydride	24
1.2K8	KR 15/18	1/3 AA	1.2	Nickel-cadmium	24
1.2H8	---	1/3 AA	1.2	Nickel-metal hydride	24
1.2K9	KR 15/30	1/2 AA	1.2	Nickel-cadmium	24
1.2H9	---	1/2 AA	1.2	Nickel-metal hydride	24
1.2K10	---	4/5 AA	1.2	Nickel-cadmium	24
1.2H10	HR 15/43	4/5 AA	1.2	Nickel-metal hydride	24
1.2K11	KR 15/51	AA	1.2	Nickel-cadmium	24
1.2H11	HR 15/51	AA	1.2	Nickel-metal hydride	24
1.2K12	---	5/4 AA	1.2	Nickel-cadmium	24
1.2H12	---	5/4 AA	1.2	Nickel-metal hydride	24
1.2K13	KR 17/18	1/3 A	1.2	Nickel-cadmium	24
1.2H13	---	1/3 A	1.2	Nickel-metal hydride	24
1.2K14	KR 17/29	2/3 A	1.2	Nickel-cadmium	24
1.2H14	HR 17/29	2/3 A	1.2	Nickel-metal hydride	24
1.2K15	KR 17/43	4/5 A	1.2	Nickel-cadmium	24
1.2H15	HR 17/43	4/5 A	1.2	Nickel-metal hydride	24
1.2K16	KR 17/50	A	1.2	Nickel-cadmium	24
1.2H16	HR 17/50	A	1.2	Nickel-metal hydride	24
1.2K17	---	4/3 A	1.2	Nickel-cadmium	25
1.2H17	HR 17/67	4/3 A	1.2	Nickel-metal hydride	25
1.2K18	KR 23/27	1/2 Cs	1.2	Nickel-cadmium	25
1.2H18	---	1/2 Cs	1.2	Nickel-metal hydride	25
1.2K19	KR 23/34	4/5 Cs	1.2	Nickel-cadmium	25
1.2H19	---	4/5 Cs	1.2	Nickel-metal hydride	25
1.2K20	KR 23/43	Cs	1.2	Nickel-cadmium	25
1.2H20	HR 23/43	Cs	1.2	Nickel-metal hydride	25
1.2K21	KR 26/31	3/5 C	1.2	Nickel-cadmium	25
1.2H21	---	3/5 C	1.2	Nickel-metal hydride	25
1.2K22	KR 26/50	C	1.2	Nickel-cadmium	25
1.2H22	HR 26/50	C	1.2	Nickel-metal hydride	25

Copyright National Electrical Manufacturers Association
Provided by IHS under license with NEMA
No reproduction or networking permitted without license from IHS
Not for Resale

ANSI Number	IEC Designation	Common Designation	Volts	Chemistry	Page
1.2K23	KR 33/44	1/2 D	1.2	Nickel-cadmium	25
1.2H23	---	1/2 D	1.2	Nickel-metal hydride	25
1.2K24	KR 33/62	D	1.2	Nickel-cadmium	25
1.2H24	---	D	1.2	Nickel-metal hydride	25
System K	---	Camcorder	---	Nickel-cadmium	30
System H	---	Camcorder	---	Nickel-metal hydride	30
System P	---	Camcorder	---	Lead-acid	32

Copyright National Electrical Manufacturers Association
Provided by IHS under license with NEMA
No reproduction or networking permitted without license from IHS
Not for Resale

2.2 Battery specification sheets

--`,,`-`-`,,`,,`,`,,`---

Copyright National Electrical Manufacturers Association
Provided by IHS under license with NEMA
No reproduction or networking permitted without license from IHS
Not for Resale

ANSI C18.2M, Part 1-2001	Battery Specification	1 through 4

This specification sheet covers sealed rechargeable nickel-cadmium and nickel-metal hydride cylindrical jacketed single cell batteries, which are interchangeable in many applications with primary batteries and are available to consumers.

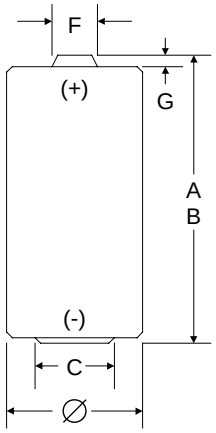

Consumer Designation	AAA	AA	C	D
NiCd ANSI Designation	1.2K1	1.2K2	1.2K3	1.2K4
NiMH ANSI Designation	1.2H1	1.2H2	1.2H3	1.2H4
A (Max)	44.5	50.5	50.0	61.5
B (Min)	43.3	49.2	48.5	59.5
C (Min)	4.3	7.0	13.0	18.0
F (Max)	3.8	5.5	7.5	9.5
G (Min)	0.8	1.0	1.5	1.5
∅ (Max)	10.5	14.5	26.2	34.2
∅ (Min)	9.5	13.5	24.9	32.3

Terminals: Cap and base terminals	**1.2K1 and 1.2H1—Small batteries**

The bottom construction shall ensure good electrical contact when the battery is placed on a flat metal surface.

Charging: The batteries covered by the specification sheet shall be capable of being charged and over-charged at a constant current of approximately O.1 C_5 amperes. Higher charge rates may be appropriate if the cells and the charger systems are designed to accommodate the increased charge rates. For specific capabilities and limitations, consult the manufacturer.

Continued on the next page.

--`,,`,,`-`-`,,`,,`,`,,`---

Copyright National Electrical Manufacturers Association
Provided by IHS under license with NEMA
No reproduction or networking permitted without license from IHS
Not for Resale

ANSI C18.2M, Part 1-2001	Battery Specification	1 through 4

Test conditions to be used for all performance tests unless otherwise specified	Sample size	Applicable sub-clause	Specific conditions	Specific requirements
Charge method		1.4.4.3.1		
Discharge method		1.4.4.5.1	EODV = 1.0 V for 0.2 and 1.0 C_5 A EODV = 0.8 V for 5 C_5 A	

Performance requirements	Sample size	Applicable sub-clause	Specific conditions	Specific requirements
Rated capacity	5	1.4.5.2	Up to five cycles may be used to demonstrate.	The capacity declared by the manufacturer must be demonstrated within the first five cycles.
Capacity retention	5	1.4.5.7		60% of rated capacity
Cycle life	5	1.4.5.10		300 cycles
Extended charging at 21°C	5	1.4.5.11	Charge at 0.1 C_5 A	1 year

Optional Parameters	Sample size	Applicable sub-clause	Specific conditions	Specific requirements
Capacity delivery vs. discharge rate	5	1.4.5.4		See note
Capacity delivery vs. discharge temperature	5	1.4.5.5		See note
Capacity delivery vs. charge temperature	5	1.4.5.6		See note
Effective internal resistance	5	1.4.5.8	Use discharge rates for low rate capable batteries	See note
Internal impedance	5	1.4.5.9		See note

NOTE—Minimum expected performance for this parameter is not typically specified. The procedure given can be used to compare batteries available from various manufacturers. These are optional performance parameters. If they are to be demonstrated, the procedure specified must be used.

Copyright National Electrical Manufacturers Association
Provided by IHS under license with NEMA
No reproduction or networking permitted without license from IHS
Not for Resale

ANSI C18.2M, Part 1-2001	Battery Specification	6 through 24

This specification sheet covers sealed rechargeable nickel-cadmium and nickel-metal hydride cylindrical bare and jacketed cells, that are typically available to industrial users. The tolerance range from an individual manufacturer is tighter than the range shown in this standard, and varies between manufacturers. Consult with the manufacturer for the actual values for a specific cell type.

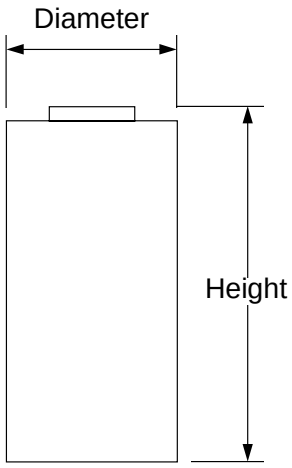

Common Designation	NiCd ANSI Designation	NiMH ANSI Designation	Diameter—bare min/max (mm)	Diameter—jacketed min/max (mm)	Length min/max (mm)
AAA	1.2K6	1.2H6	9.50/10.7	9.50/10.7	42.6/44.5
5/4 AAA	1.2K7	1.2H7	9.50/10.7	9.50/10.7	49.0/50.0
1/3 AA	1.2K8	1.2H8	13.3/14.2	13.5/14.7	15.7/17.3
1/2 AA	1.2K9	1.2H9	13.3/14.2	13.5/14.7	24.0/30.0
4/5 AA	1.2K10	1.2H10	13.3/14.2	13.5/14.7	42.0/43.0
AA	1.2K11	1.2H11	13.3/14.2	13.5/14.7	47.3/50.5
5/4 AA	1.2K12	1.2H12	13.5/14.2	13.3/14.7	64.0/65.0
1/3 A	1.2K13	1.2H13	16.0/16.7	16.0/17.2	16.0/17.0
2/3 A	1.2K14	1.2H14	16.0/16.7	16.0/17.2	27.0/28.5
4/5 A	1.2K15	1.2H15	16.0/16.7	16.0/17.2	41.5/43.0
A	1.2K16	1.2H16	16.0/16.7	16.0/17.2	48.2/50.0

Continued on the next page.

Copyright National Electrical Manufacturers Association
Provided by IHS under license with NEMA
No reproduction or networking permitted without license from IHS
Not for Resale

ANSI C18.2M, Part 1-2001	Battery Specification	6 through 24

Common Designation	NiCd ANSI Designation	NiMH ANSI Designation	Diameter—bare min/max (mm)	Diameter—jacketed min/max (mm)	Length min/max (mm)
4/3 A	1.2K17	1.2H17	16.0/16.7	16.0/17.2	65.0/67.0
1/2 Cs	1.2K18	1.2H18	21.7/22.3	22.0/23.0	25.0/26.5
4/5 Cs	1.2K19	1.2H19	21.7/22.3	22.0/23.0	32.5/34.0
Cs	1.2K20	1.2H20	21.7/22.3	22.0/23.0	41.0/43.0
3/5C	1.2K21	1.2H21	24.8/25.6	24.8/26.0	29.5/31.0
C	1.2K22	1.2H22	24.8/25.6	24.8/26.0	45.0/50.0
1/2D	1.2K23	1.2H23	31.6/32.6	31.6/33.0	35.2/44.0
D	1.2K24	1.2H24	31.6/32.6	31.6/33.0	57.0/61.5

Test conditions to be used for all performance tests unless otherwise specified	Applicable sub-clause	Specific conditions	Specific requirements
Charge method	1.4.4.3.2	High rate charge at 1 CA	Terminate high rate charge based on -ΔV of 5 mV
Discharge method	1.4.4.5.1	EODV = 1.0 V for 0.2 and 1.0 C_5 A EODV = 0.8 V for 5 C_5 A	

Performance requirements	Sample size	Applicable sub-clause	Specific conditions	Specific requirements
Rated capacity	5	1.4.5.2		The capacity declared by the manufacturer must be demonstrated within the first five cycles.
Capacity retention	5	1.4.5.7		60% of rated capacity
Cycle life	5	1.4.5.10		300 cycles
Extended charging at 21°C	5	1.4.5.11	Charge at constant current of 0.1 C_5 A	1 year
Storage test	5	1.4.5.12		The battery shall deliver at least 80% of rated capacity
Shock test	5	1.4.6.1		The battery shall deliver at least 90% of rated capacity
Vibration test	5	1.4.6.2		The battery shall deliver at least 90% of rated capacity
Drop test	5	1.4.6.3		The battery shall deliver at least 90% of rated capacity

Continued on the next page.

Copyright National Electrical Manufacturers Association
Provided by IHS under license with NEMA
No reproduction or networking permitted without license from IHS
Not for Resale

ANSI C18.2M, Part 1-2001	Battery Specification	6 through 24

Optional Parameters	Sample size	Applicable sub-clause	Specific conditions	Specific requirements
Capacity delivery vs. discharge rate	5	1.4.5.4		See note
Capacity delivery vs. discharge temperature	5	1.4.5.5		See note
Capacity delivery vs. charge temperature	5	1.4.5.6		See note
Effective internal resistance	5	1.4.5.8	Use discharge rates for low rate capable batteries	See note
Internal impedance	5	1.4.5.9		See note
Charge efficiency	5	1.4.5.13		See note

Note—Minimum expected performance for this parameter is not typically specified. The procedure given can be used to compare batteries available from various manufacturers. These are optional performance parameters. If they are to be demonstrated, the procedure specified must be used.

Copyright National Electrical Manufacturers Association
Provided by IHS under license with NEMA
No reproduction or networking permitted without license from IHS
Not for Resale

This page intentionally left blank.

Copyright National Electrical Manufacturers Association
Provided by IHS under license with NEMA
No reproduction or networking permitted without license from IHS
Not for Resale

ANSI C18.2M, Part 1-2001	Battery Specification	5

This specification sheet covers sealed rechargeable nickel-cadmium and nickel-metal hydride jacketed multi-cell batteries, which are interchangeable in many applications with 9 volt primary batteries and are available to consumers.

These batteries shall not be used in smoke and carbon monoxide detectors.

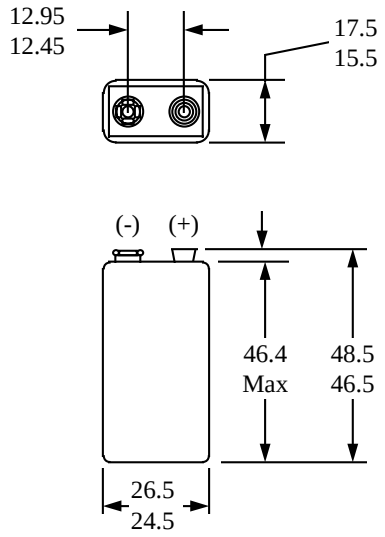

Millimeters	Inches	Millimeters	Inches
12.45	0.490	26.5	1.043
12.95	0.510	46.4	1.827
15.5	0.610	46.5	1.831
17.5	0.689	48.5	1.909
24.5	0.965		

Consumer Designation	Nickel-cadmium ANSI Designation	Nickel-metal hydride ANSI Designation
9 Volt	7.2K5	7.2H5
9 Volt	8.4K5	8.4H5

Terminals: Snap terminals	

Charging: The batteries covered by this specification sheet shall be capable of being charged and overcharged at a constant current of approximately 0.1 C_5 amperes. Higher charge rates may be appropriate if the cells and the charger systems are designed to accommodate the increased charge rates. For specific capabilities and limitations, consult the manufacturer.

Continued on the next page.

Copyright National Electrical Manufacturers Association
Provided by IHS under license with NEMA
No reproduction or networking permitted without license from IHS
Not for Resale

ANSI C18.2M, Part 1-2001	Battery Specification	5

Test conditions to be used for all performance tests unless otherwise specified	Applicable sub-clause	Specific conditions	Specific requirements
Charge method	1.4.4.3.1		
Discharge method	1.4.4.5.1	EODV = 1.0 V/cell for 0.2 and 1.0 C_5 A EODV = 0.8 V/cell for 5 C_5 A	

Performance Requirements	Sample Size	Applicable sub-clause	Specific conditions	Specific requirements
Rated capacity	5	1.4.5.2		The capacity declared by the manufacturer must be demonstrated within the first five cycles.
Capacity retention	5	1.4.5.7		60% of rated capacity
Cycle life	5	1.4.5.10		300 cycles
Extended charging at 21°C	5	1.4.5.11	Charge at 0.1 C_5 A	1 year

Optional Parameters	Sample Size	Applicable sub-clause	Specific conditions	Specific requirements
Capacity delivery vs. discharge rate	5	1.4.5.4		See note.
Capacity delivery vs. discharge temperature	5	1.4.5.5		See note.
Capacity delivery vs. charge temperature	5	1.4.5.6		See note.
Effective internal resistance	5	1.4.5.8	Use discharge rates for low rate capable batteries.	See note.
Internal impedance	5	1.4.5.9		See note.

NOTE—Minimum expected performance for this parameter is not typically specified. The procedure given can be used to compare batteries available from various manufacturers. These are optional performance parameters. If they are to be demonstrated, the procedure specified must be used.

Copyright National Electrical Manufacturers Association
Provided by IHS under license with NEMA
No reproduction or networking permitted without license from IHS
Not for Resale

ANSI C18.2M, Part 1-2001	Battery Specification	Camcorder (Systems K & H)

This specification sheet covers sealed rechargeable nickel-cadmium (system K) and nickel-metal hydride (system H) multi-cell batteries for replacement use in consumer portable camcorders.

The fit, function, and connections of the replacement battery shall be compatible with the intended portable consumer camcorder and camcorder charger system and shall ensure proper polarity orientation between batteries, chargers, and camcorders.

The following shall be marked on the battery in addition to the general items specified in 1.4.7.1, rated capacity at 1 A.

If there are safety and control devices in the original equipment packs, the replacement battery shall contain safety and control devices functionally equivalent to those found in the original equipment packs.

Test conditions to be used for all performance tests unless otherwise specified	Applicable sub-clause	Specific conditions	Specific requirements
Charge method	1.4.4.3.2	Use same charge currents and cut-over method as is used in the intended application	
Discharge method	1.4.4.5.2	Application rate = 1.0 A; EODV = 1.0 V/cell	

Performance requirements	Sample size	Applicable sub-clause	Specific conditions	Specific requirements
Application capacity	5	1.4.5.3		The capacity declared by the manufacturer must be demonstrated within the first five cycles, in accordance with conditions given below.
Effect of temperature during discharge on capacity delivery	5	1.4.5.5	Test is to be performed at -20°C only	The delivery at -20°C must be at least 50% of application capacity declared by the manufacturer in accordance with conditions given below.
Effect of temperature during charge on capacity delivery	5	1.4.5.6	Test is to be performed at 10°C only; extend the 0.1 C_5 A charge to 72 hr	Capacity delivery must be at least 100% of application capacity declared by the manufacturer in accordance with conditions given below.

Continued on the next page.

Copyright National Electrical Manufacturers Association
Provided by IHS under license with NEMA
No reproduction or networking permitted without license from IHS
Not for Resale

ANSI C18.2M, Part 1-2001	Battery Specification	Camcorder (Systems K & H)

Performance requirements	Sample size	Applicable sub-clause	Specific conditions	Specific requirements
Capacity retention	5	1.4.5.7		Capacity delivery must be at least 50% of application capacity declared by the manufacturer in accordance with conditions given below.
Cycle life	5	1.4.5.10		200 cycles minimum
Storage test	5	1.4.5.12 (Preferred storage condition)	Store battery fully discharged	Capacity delivery must be at least 90% of application capacity declared by the manufacturer in accordance with conditions given below. A second charge/ discharge cycle is permissible, if needed, to meet this requirement.
Terminal endurance test	5	1.4.6.4		The battery shall maintain proper electrical and physical functions.

Conditions for acceptance (capacity delivery): See 1.4.5.1.

Copyright National Electrical Manufacturers Association
Provided by IHS under license with NEMA
No reproduction or networking permitted without license from IHS
Not for Resale

ANSI C18.2M, Part 1-2001	Battery Specification	Camcorder (System P)

This specification sheet covers sealed rechargeable lead-acid (system P) multi-cell batteries for replacement use in consumer portable camcorders.

The fit, function, and connections of the replacement battery shall be compatible with the intended portable consumer camcorder and camcorder charger system and shall ensure proper polarity orientation between batteries, chargers, and camcorders.

The following shall be marked on the battery in addition to the general items specified in 1.4.7.1, rated capacity at 1 A.

If there are safety and control devices in the original equipment packs, the replacement battery shall contain safety and control devices functionally equivalent to those found in the original equipment packs.

Test conditions to be used for all performance tests unless otherwise specified	Applicable sub-clause	Specific conditions	Specific requirements
Charge method	1.4.4.3.3	Use a charge voltage of 2.45 V/cell and cut-over method as is used in the intended application	
Discharge method	1.4.4.5.2	Application rate = 1.0 A; EODV = 1.75 V/cell	

Performance requirements	Sample size	Applicable sub-clause	Specific conditions	Specific requirements
Application capacity	5	1.4.5.3		The capacity declared by the manufacturer must be demonstrated within the first five cycles, in accordance with conditions given below.
Effect of temperature during discharge on capacity delivery	5	1.4.5.5	Test is to be performed at -20°C only	Capacity delivery at -20°C must be at least 35% of application capacity declared by the manufacturer in accordance with conditions given below.
Capacity retention	5	1.4.5.7		Capacity delivery must be at least 50% of application capacity declared by the manufacturer in accordance with conditions given below.

Continued on the next page.

Copyright National Electrical Manufacturers Association
Provided by IHS under license with NEMA
No reproduction or networking permitted without license from IHS
Not for Resale

ANSI C18.2M, Part 1-2001	Battery Specification	Camcorder (System P)

Performance requirements	Sample size	Applicable sub-clause	Specific conditions	Specific requirements
Cycle life	5	1.4.5.10		200 cycles minimum
Storage test	5	1.4.5.12 (Preferred storage condition)	Store battery fully discharged	Capacity delivery must be at least 90% of application capacity declared by the manufacturer in accordance with conditions given below. A second charge/ discharge cycle is permissible, if needed, to meet this requirement.
Terminal endurance test	5	1.4.6.4		The battery shall maintain proper electrical and physical functions.
Over-discharge performance	5	1.4.5.14		Capacity delivery must be at least 50% of application capacity declared by the manufacturer in accordance with conditions given below.

Conditions for acceptance (capacity delivery): See 1.4.5.1.

Copyright National Electrical Manufacturers Association
Provided by IHS under license with NEMA
No reproduction or networking permitted without license from IHS
Not for Resale

This page intentionally left blank.

Copyright National Electrical Manufacturers Association
Provided by IHS under license with NEMA
No reproduction or networking permitted without license from IHS
Not for Resale

Annex A
(informative)

Reliability guidelines

The following are safety and reliability guidelines for cell/battery manufacturers, device manufacturers, and end-users.

Safety and reliability of rechargeable cells or batteries are enhanced if the cell/battery manufacturer, device manufacturer, and end-user follow practices and procedures outlined in this annex and in ANSI C18.2M, Part 2, Sections 7 and 8.

A.1 Measures taken by cell manufacturer

Such measures should be taken by the cell manufacturer as are necessary to enhance the safety and optimize the functional reliability of rechargeable cells. Examples include providing cells with:

a) Safety features;
b) Sealing to prevent electrolyte leakage during intended use;
c) Insulation between cell components of opposite polarity to prevent self-shorting.

A.2 Measures taken by battery manufacturer (assembler)

a) Use only cells of same design, age, size, capacity rating, and manufacturer.
b) Terminals should be protected from inadvertent shorting and mechanical damage.
c) A means should be provided to avoid gas accumulation in the battery.

A.3 Measures taken by device manufacturers (OEM)

The following are considerations for OEMs:

a) Select the proper battery for the intended application.
b) Provide for battery charging only in accordance with the instructions and limitations specified by the cell/battery manufacturer, particularly for continuous charge or for rapid (high rate) charge controlled by state of charge feedback.
c) Only batteries identified as “rechargeable” should be charged.
d) Insure proper polarity connection of cells or batteries with chargers and devices.
e) The battery manufacturer should be consulted for advice prior to making a solder or welded connection to the battery.
f) Careful consideration should be given to the contact mechanism used. The choice of contact material and the type of contact mechanism will affect the reliability of the device.
   - Pressure contact requires a special knowledge of connection mechanisms, contact materials, corrosion couples, connection force, point connections, corrosion inhibitors, etc. Therefore, seek advice from the battery and/or connector manufacturer.
   - High temperature and humidity tests should be performed to test for contact integrity.
g) When ultrasonically sealing a device containing batteries, no ribs or other parts of the plastic “case” should be in contact with the batteries or battery contact mechanism.

Copyright National Electrical Manufacturers Association
Provided by IHS under license with NEMA
No reproduction or networking permitted without license from IHS
Not for Resale

h) Terminals should be protected from inadvertent shorting and mechanical damage.
i) A means should be provided to prevent gas accumulation in the battery or device.
j) Precautions should be taken to prevent reverse charging.

A.4 Measures taken by consumer/user

Notwithstanding the fact that the cells, batteries, and devices are provided with certain safety features, it is important that they be used within their design limits as recommended by their manufacturer. In order for batteries and devices to operate reliably, the following should be taken into consideration:

Warning: Failure to comply with these precautions can cause the cell (battery) to overheat, leak, or explode.

a) Batteries should be stored in a cool dry place to prevent high temperature degradation.
b) Contacts on the battery and in the device should be kept clean.
c) Follow the recommendations supplied with the device for purchasing the proper battery.
d) Exercise care in handling batteries in order to prevent shorting with conducting materials, such as rings, coins, bracelets, and keys. The battery or the conductor can overheat and cause burns.
e) Do not dispose of the battery in a fire.
f) Do not open or mutilate a battery or cell. Electrolyte from the cell is corrosive and can cause damage to the eyes or skin. The cell contents can also be hazardous if ingested.
g) Only cells or batteries identified as “rechargeable” should be charged.
h) Dispose of batteries in accordance with manufacturers recommendations and government regulations.

Copyright National Electrical Manufacturers Association
Provided by IHS under license with NEMA
No reproduction or networking permitted without license from IHS Not for Resale

Annex B
(informative)

Storage

Cells or batteries are capable of being stored for extended periods of time under suitable conditions. The preferred storage conditions for each battery chemistry are given in Table 7. Storage at elevated temperatures for prolonged periods, such as 40°C or higher, will result in an increased rate of self-discharge and can result in separator and/or seal degradation, which can cause early failure. Storage in moist or damp areas can also result in early battery failure. Storage at elevated temperature for prolonged periods of time or in damp areas should be avoided.

Table 7 – Storage recommendations

Chemical System	Preferred Storage Temperature	Preferred State of Charge at Beginning of Storage	Minimum Storage Temperature
Nickel-cadmium	0°C to 30°C	Per manufacturer's recommendation	-20°C
Nickel-metal hydride	0°C to 30°C	Per manufacturer's recommendation	-20°C
Lithium-ion	0°C to 30°C	Per manufacturer's recommendation	-20°C
Lead acid	0°C to 30°C	Fully Charged	-20°C

NOTE—Some batteries are adversely impacted by extended storage at a low state of charge. Periodic recharge may be beneficial. The battery manufacturer should be consulted for guidance.

Copyright National Electrical Manufacturers Association
Provided by IHS under license with NEMA
No reproduction or networking permitted without license from IHS
Not for Resale

This page intentionally left blank.

Copyright National Electrical Manufacturers Association
Provided by IHS under license with NEMA
No reproduction or networking permitted without license from IHS
Not for Resale

Annex C
(informative)

Bibliography

IEC 60068-2-6, *Environmental Testing, Part 2: Test Fc, Vibration (Sinusoidal)*

IEC 60068-2-27, *Environmental Testing, Part 2: Test Ea, Shock*

IEC 60086-1, *Primary Batteries, Part 1: General*

IEC 60086-2, *Primary Batteries, Part 2: Specification Sheets*

IEC 600285, *Alkaline Secondary Cells and Batteries—Sealed Nickel-cadmium Cylindrical Rechargeable Single Cells*

IEEE 268, *American National Standard Metric Practice*

Copyright National Electrical Manufacturers Association
Provided by IHS under license with NEMA
No reproduction or networking permitted without license from IHS
Not for Resale

This page intentionally left blank.

Copyright National Electrical Manufacturers Association
Provided by IHS under license with NEMA
No reproduction or networking permitted without license from IHS
Not for Resale