NEMA C135.5 87 ■ 6470247 0506869 223 ■

ANSI®
C135.5-1987

American National Standard for Zinc-Coated Ferrous Eyenuts and Eyebolts for Overhead Line Construction

Published by

National Electrical Manufacturers Association
2101 L Street, NW
Washington, DC 20037
(202) 457-8400

© 1988 by National Electrical Manufacturers Association

Copyright National Electrical Manufacturers Association
Provided by IHS under license with NEMA
No reproduction or networking permitted without license from IHS

Not for Resale

Foreword

(This Foreword is not a part of American National Standard for Zinc-Coated Ferrous Eyenuts and Eyebolts for Overhead Line Construction, ANSI 135.5-1987.)

This standard covers requirements for various types of zinc coated ferrous eyenuts and eyebolts on overhead line construction.

It was developed from a proposal submitted by a group of members of American National Standards Committee C135, which is in charge of this work on a joint basis with members of the NEMA Pole and Transmission Line Construction Materials Section Technical Committees.

Suggestions for improvement of this standard will be welcome. They should be sent to the Acredited Standards Committee C135 c/o the National Electrical Manufacturers Association, 2101 L St., N.W., Suite 300, Washington, D.C. 20037.

This standard was processed and approved for submittal to ANSI by American National Standards Committee on Pole Line Hardware, C135. Committee approval of the standard does not necessarily imply that all committee members voted for its approval. At the time it approved this standard, the C135 Committee had the following members:

C.M. Giltner, Chairman
J. Gauthier, Secretary

Organization Represented	*Name of Representative*
American Public Power Association	R. L. Schucker
American Society of Mechanical Engineers	R. B. Belford
Bonneville Power Administration	C. M. Sande
Electric Light and Power Group	G. C. Croft
	J. F. Gillespie
	E. E. Gruchalla
	M. W. Henderson
	J. P. Markey (Alt)
	J. W. Likens
	E. J. Simmons
	S. S. Swift
	G. F. Thompson (Chm)
Institute of Electrical and Electronics Engineers	Myron Brochat
	K. E. Lindsey (Chm)
	J. T. Morgan
National Electrical Manufacturers Association	J. R. D'Agati
	E. J. Danko
	R. N. Essig
	S. C. Garton
	C. M. Giltner (Chm)
	J. R. Patterson
	G. Rokos
	J. A. Rolls
	F. Stiff
	L. J. Brooks (Alt)
	J. S. Barr (Alt)
	R. H. Dawson (Alt)
	E. Dziedzic (Alt)
	A. Medler (Alt)
	H. F. Van der Voort (Alt)
Occupational Safety and Health Administration	D. M. Wallis
Rural Electrification Administration	D. G. Heald
Telephone Group	R. E. Hitchcock
Tennessee Valley Authority	L. J. Berry, Jr.

Copyright National Electrical Manufacturers Association
Provided by IHS under license with NEMA
No reproduction or networking permitted without license from IHS
Not for Resale

Contents

SECTION		PAGE
1.	Scope and Application	5
1.1	Scope	5
1.2	Application	5
2.	Material	5
3.	Threading	5
4.	Strength	5
5.	Corrosion Protection	5
6.	Finish	5
7.	Marking of Eyenuts and Eyelets	5
8.	Marking of Shipping Packages	5
Figure 1—	Dimensions for Single, Double, and Triple Strand-Eye Anchor Rods, in Inches	6

Copyright National Electrical Manufacturers Association
Provided by IHS under license with NEMA
No reproduction or networking permitted without license from IHS

Not for Resale

American National Standard for Zinc-Coated Ferrous Eyenuts and Eyebolts for Overhead Line Construction

1. Scope and Application

1.1 Scope. This standard covers zinc-coated ferrous eyenuts and eybolts commonly used in overhead line construction.

1.2 Application. Eyenuts and eyebolts covered by this standard shall conform in all respects to the basic dimensional and performance requirements hereinafter stated. The text, referenced to other specifications or standards, and associated Data Sheet 1 supplement each other, and all shall be considered parts of this standard.

2. Material

2.1 All eyenuts and eyebolts shall be made of (1) hot-rolled steel that has been produced by the open-hearth, basic-oxygen, or electric furnace process, or (2) malleable or ductile-type ferrous castings. All of these materials shall be of a grade and quality suitable to meet the requirements of this standard.

3. Threading

All eyenuts shall be tapped after zinc-coating according to Table 1 and, where applicable, shall meet the strength requirements of Section 4.

4. Strength

4.1 Eyenuts and eyebolts shall have sufficient strength to develop the minimum tensile strength of the bolts or anchor rods for which they are intended but in no case shall their tensile strength be less than the following:

Eyenut or Eyebolt Designation	Minimum Load (Pounds)
5/8 in (Bolt)	13550
5/8 in (Anchor Rod)	16000
3/4 in (Bolt)	20050

5. Corrosion Protection

5.1 Eyenuts and eyebolts shall be zinc coated. The coating shall be applied by:

(1) the hot-dip process in accordance with the Standard Specification for Zinc Coating (Hot-Dip) on Iron and Steel Hardware, ANSI/ASTM A-153-82, or

(2) another method producing a zinc coating that meets the requirements of ANSI/ASTM A-153-82 for adhesion, purity, and thickness applicable to the class of material being coated.

6. Finish

6.1 Eyenuts and eyebolts shall be free from burrs, seams, laps, fins, and irregular surfaces that affect serviceability.

6.2 Eyenuts and eyebolts shall be free from badly formed, rough, or cracked eyes.

6.3 The inner surface of the eyes shall be smooth and free from projections.

6.4 Eyenuts and eyebolts shall be symmetrically formed with the holes centrally located. The axis of the threaded hole shall be parallel to the axis of symmetry with a tolerance of $\pm 3°$.

7. Marking

7.1 All eyenuts and eyebolts shall bear the manufacturer's symbol or identification mark.

8. Marking of Shipping Packages

8.1 Each package of eyebolts shall be marked with the manufacturer's name and catalog number.

Copyright National Electrical Manufacturers Association
Provided by IHS under license with NEMA
No reproduction or networking permitted without license from IHS
Not for Resale

TABLE 1

Bolt Threads

Bolt Size Nominal	Threads Per Inch
5/8''	11
3/4''	10

Major Nom.

Dia. Min.	Tap Size O. D. (Inches)
0.646	0.646-11
0.771	0.771-10

Anchor Rod Threads

Rod Size Nominal	Threads Per Inch
5/8''	11

Major Nom.

Dia. Min.	Tap Size O. D. (Inches)
0.694	0.695-11

Eyenuts

Tapped Threads			
Pitch Dia.		Minor Dia.	
Min.	Max.	Min.	Max.
0.487	0.594	0.548	0.567
0.706	0.714	0.663	0.684

Tapped Threads			
Pitch Dia.		Minor Dia.	
Min.	Max.	Min.	Max.
0.635	0.643	0.596	0.615

Copyright National Electrical Manufacturers Association
Provided by IHS under license with NEMA
No reproduction or networking permitted without license from IHS
Not for Resale

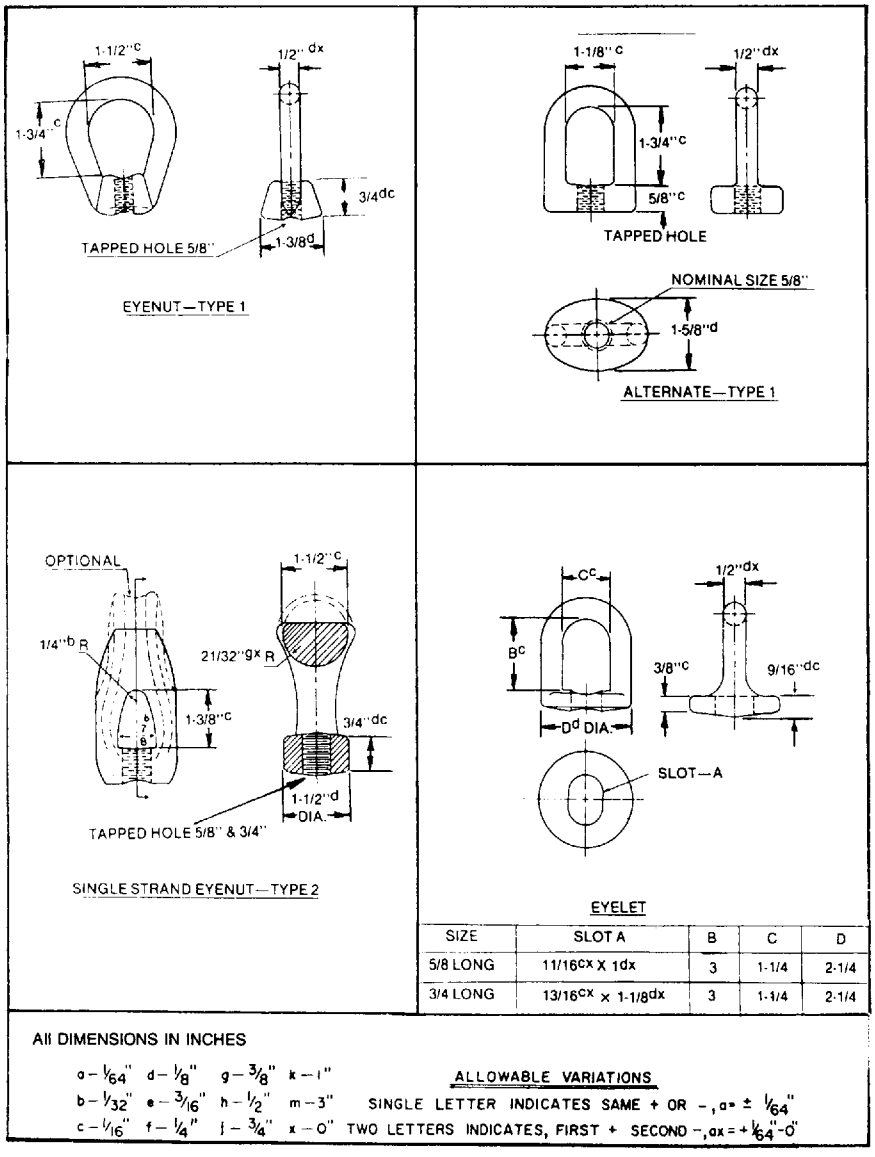

SIZE	SLOT A	B	C	D
5/8 LONG	11/16cx X 1dx	3	1-1/4	2-1/4
3/4 LONG	13/16cx x 1-1/8dx	3	1-1/4	2-1/4

All DIMENSIONS IN INCHES

a – 1/64" d – 1/8" g – 3/8" k – 1"
b – 1/32" e – 3/16" h – 1/2" m – 3"
c – 1/16" f – 1/4" j – 3/4" x – 0"

ALLOWABLE VARIATIONS

SINGLE LETTER INDICATES SAME + OR –, a = ± 1/64"

TWO LETTERS INDICATES, FIRST + SECOND –, ax = + 1/64"-0"

DATA SHEET 1

Copyright National Electrical Manufacturers Association
Provided by IHS under license with NEMA
No reproduction or networking permitted without license from IHS
Not for Resale