C135.2-87 6470247 0007169 T A-31-23

ANSI C135.2-1987

American National Standard

for threaded zinc-coated ferrous strand-eye anchor rods and nuts for overhead line construction

american national standards institute, inc.
1430 broadway, new york, new york 10018

Copyright National Electrical Manufacturers Association
Provided by IHS under license with NEMA
No reproduction or networking permitted without license from IHS
Not for Resale

C135.2-87 6470247 0007170 6

ANSI®
C135.2-1987

American National Standard for Threaded Zinc-Coated Ferrous Strand-Eye Anchor Rods and Nuts for Overhead Line Construction

Published by

National Electrical Manufacturers Association
2101 L Street, NW
Washington, DC 20037
(202) 457-8400

© 1988 by National Electrical Manufacturers Association

Copyright National Electrical Manufacturers Association
Provided by IHS under license with NEMA
No reproduction or networking permitted without license from IHS

Not for Resale

Foreword

(This Foreword is not a part of American National Standard for Threaded Zinc-Coated Ferrous Strand-Eye Anchor Rods and Nuts for Overhead Line Construction, ANSI C135.2-1987.)

This standard covers requirements for threaded strand-eye anchor rods and nuts commonly used in overhead line construction. It was developed from a proposal submitted by a group of members of American National Standards Committee C135, which is in charge of this work.

Suggestions for improvement of this standard will be welcome. They should be sent to ASC C135 c/o NEMA, 2101 L Street, N.W., Washington, DC 20037.

This standard was processed and approved for submittal to ANSI by Accredited Standards Committee on Pole Line Hardware, C135. Committee approval of the standard does not necessarily imply that all committee members voted for its approval. At the time it approved this standard, the C135 Committee had the following members:

C. M. Giltner, Chairman
J. Gauthier Secretary

Organization Represented	*Name of Representative*
American Public Power Association	R. L. Schucker
American Society of Mechanical Engineers	R. B. Belford
Bonneville Power Administration	C. M. Sande
Electric Light and Power Group	G. C. Croft
	J. F. Gillespie
	E. E. Gruchalla
	M. W. Henderson
	J. P. Markey (Alt)
	J. W. Likens
	E. J. Simmons
	S. S. Swift
	G. F. Thompson (Chm)
Institute of Electrical and Electronics Engineers	Myron Brochat
	K. E. Lindsey (Chm)
	James T. Morgan
National Electrical Manufacturers Association	J. R. D'Agati
	E. J. Danko
	R. N. Essig
	S. C. Garton
	C. M. Giltner (Chm)
	J. R. Patterson
	G. Rokos
	J. A. Rolls
	F. Stiff
	L. J. Brooks (Alt)
	J. S. Barr (Alt)
	R. H. Dawson (Alt)
	E. Dziedzic (Alt)
	A. Medler (Alt)
	H. F. Van der Voort (Alt)
Occupational Safety and Health Administration	D. M. Wallis
Rural Electrification Administration	D. G. Heald
Telephone Group	R. E. Hitchcock
Tennessee Valley Authority	L. J. Berry, Jr.

Copyright National Electrical Manufacturers Association
Provided by IHS under license with NEMA
No reproduction or networking permitted without license from IHS
Not for Resale

Contents

SECTION		PAGE
1.	Scope and Application	5
1.1	Scope	5
1.2	Application	5
2.	Material	5
2.1	Anchor Rods	5
3.	Dimensions	5
3.1	Anchor Rods	5
3.2	Nuts	5
4.	Threads	5
4.1	Anchor Rod Threads	5
4.2	Nut Threads	5
5.	Tests for Strength	6
5.1	Tensile Load Test	6
5.2	Bend Test	6
6.	Sizes	6
7.	Corrosion Protection	6
8.	Finish	6
9.	Marking of Anchor Rods	7
10.	Marking of Shipments	7
Table 1	Dimensions of Heavy Square Nuts, in Inches	5
Table 2	Dimensions of Nut Threads, in Inches	6
Table 3	Dimensions of Anchor-Rod Threads, in Inches	6
Table 4	Nominal Anchor-Rod Sizes	7
Figure 1	Dimensions for Single, Double, and Triple Strand-Eye Anchor Rods, in Inches	7

Copyright National Electrical Manufacturers Association
Provided by IHS under license with NEMA
No reproduction or networking permitted without license from IHS
Not for Resale

American National Standards for Zinc Coated Threaded Ferrous Strand-Eye Anchor Rods and Nuts for Overhead Line Construction

1. Scope and Application

1.1 Scope. This standard covers threaded zinc coated ferrous strand-eye anchor rods and nuts commonly used in overhead line construction.

1.2 Application. Anchor rods and nuts conforming to the requirements of this standard shall, in all respects, meet the basic dimensional and performance requirements hereinafter stated. The text, tabular specifications, references to other standards, and figures supplement each other and shall be considered as parts of this standard.

2. Material

2.1 Anchor Rods. All anchor rods shall be made from hot-rolled steel produced by the open-hearth, basic-oxygen, or electric furnace process and shall be of a grade and quality suitable to meet the requirements of this standard.

3. Dimensions

3.1 Anchor Rods. All dimensions before zinc coating shall be in accordance with those shown in Figure 1.

3.2 Nuts. All anchor rods shall be furnished with one square nut per rod unless otherwise specified. The nuts shall be assembled on the rods; suitable means shall be provided for preventing loss in transit. The nuts shall be of the heavy square type and shall meet the requirements of American National Standard for Square and Hex Nuts, ANSI B18.2.21-1972. Dimensions for nuts, before zinc coating, shall be in accordance with Table 1.

4. Threads

4.1 Anchor Rod Threads. Anchor rod threads shall, before zinc coating, be concentric with the axis of the rod and shall be machine rolled or cut in accordance with the dimensions given in Table 2.

For roll-threaded products made from hot-rolled bars, some variations from the dimensions given in Table 2 may be expected due to American Iron and Steel Institute (AISI) diameter tolerances.

After zinc coating, the external threaded portion of all anchor rods shall be in such a condition that nuts tapped in accordance with Table 3 will fit the rods and can be run the entire length of the thread without the use of tools.

4.2 Nut Threads. After zinc coating, anchor rod nuts shall be tapped oversize in accordance with the dimensions given in Table 3.

Table 1
Dimensions of Heavy Square Nuts, in Inches

Nominal Bolt Size	Width across			Width across Corners		Thickness		
	Basic	Max	Min	Max	Min	Basic	Max	Min
5/8	1-1/16	1.0625	1.031	1.503	1.416	5/8	0.647	0.587
3/4	1-1/4	1.2500	1.212	1.768	1.665	3/4	0.774	0.710
1	1-5/8	1.6250	1.575	2.298	2.162	1	1.028	0.956

NOTES:

(1) The maximum width across the flats shall not be exceeded. No transverse section through the nut between 25 percent–75 percent of the nut thickness as measured from the bearing face shall be less than the minimum width across the flats.

(2) The tops of the nuts shall be flat and shall be chamfered or washer crowned. The diameter of the chamfer circle shall be equal to the maximum width across the flats, within a tolerance of −15 percent.

(3) The bearing surface shall be at right angles to the axis of the threaded hole, within a tolerance of 3°.

(4) The axis of the tapped hole shall be concentric with the axis of the nut body, within a tolerance equal to 5 percent [10 percent Full Indicator Reading (FIR)] of the maximum width across the flats.

Copyright National Electrical Manufacturers Association
Provided by IHS under license with NEMA
No reproduction or networking permitted without license from IHS
Not for Resale

Table 2
Dimension of Nut Threads, in inches

Nominal Rod Size	Threads per Inch	Pitch Diameter		Minor Diameter		Major Diameter	Nominal Tap Size
		Min	Max	Min	Max	Min	
5/8	11	0.6354	0.6426	0.5964	0.6154	0.6944	0.695-11
3/4	10	0.7613	0.7690	0.7183	0.7393	0.8263	0.826-10
1	8	0.9398	0.9486	0.886	0.911	1.021	1.021-8

Table 3
Dimension of Anchor-Rod Threads, in inches

Nominal Rod Size	Rolled or Cut	Series and Class	Rod Diameter		Major Diameter		Pitch Diameter	
			Max	Min	Max	Min	Max	Min
5/8	R	11-UNS-2A	0.616	0.602	0.6718	0.6536	0.6113	0.6058
3/4	R	10-UNS-2A	0.742	0.726	0.8034	0.7841	0.7364	0.7305
1	C	8-UNC-2A	1.009	0.975	0.9980	0.9755	0.9168	0.9100

5. Tests for Strength

5.1 Tensile Load Test. Any assembled anchor rod, when tested by restraining the nut and applying a load by a suitable means through the eye of the rod, shall withstand the following tensile loads:

Nominal Rod Size	Minimum Load (Pounds)
5/8	16,000
3/4	23,000
1	36,000

if failure occurs, it shall occur only in the shank or threaded section of the anchor rod; threads shall not strip below minimum specified tensile strength.

If desired, this test may be made in two steps:

Step 1: Apply a tensile load to the unthreaded portion of the rod and to a bar passing through the eye of the rod.

Step 2: Apply a tensile load to the unthreaded portion of the rod while restraining the nut.

In Step 2, at least three full threads of the threaded rods shall extend beyond the face of the nut.

5.2 Bend Test. It shall be possible, while the assembled anchor rod is at room temperature, to bend any point of the unthreaded portion of the rod through an angle of 90°, about a mandrel equal to the diameter of the anchor rod, without fracture of the steel. Spalling or cracking of the zinc coating in this test shall not be deemed failure to meet this requirement.

6. Sizes

6.1 Anchor-rod sizes in inches and lengths in feet shall be as given in Table 4.

7. Corrosion Protection

7.1 All anchor rods and nuts shall be zinc coated. The coating shall be applied by:

(1) the hot-dip process in accordance with the Standard Specification for Zinc Coating (Hot-Dip) on Iron and Steel Hardware, ANSI/ASTM A-153-82, or

(2) another method producing a zinc coating that meets the requirements of ANSI/ASTM A-153-82 for adhesion, purity, and thickness applicable to the class of material being coated.

8. Finish

8.1 Anchor rods shall be free from burrs and fins that affect serviceability.

Copyright National Electrical Manufacturers Association
Provided by IHS under license with NEMA
No reproduction or networking permitted without license from IHS
Not for Resale

8.2 Anchor rods shall be free from badly formed, rough, or cracked eyes.

8.3 The inner surfaces of the anchor rod eyes that contact the strand shall be smooth and free from projections.

9. Marking of Anchor Rods

9.1 All anchor rods shall be permanently marked near the eye with (1) the manufacturer's symbol (or identification) and (2) the length of the rod.

10. Marking of Shipments

Each shipment of anchor rods shall be marked with the manufacturer's name and catalog number.

Table 4
Nominal Anchor-Rod Sizes

Nominal Rod Size (Inches)	Length (Feet)		
	Single-Strand Eye-Type	Double-Strand Eye-Type	Triple-Strand Eye-Type
5/8	6, 7, 8	6, 7, 8	—
3/4	8	7, 8, 9	7, 8, 9
1	—	10	8, 10

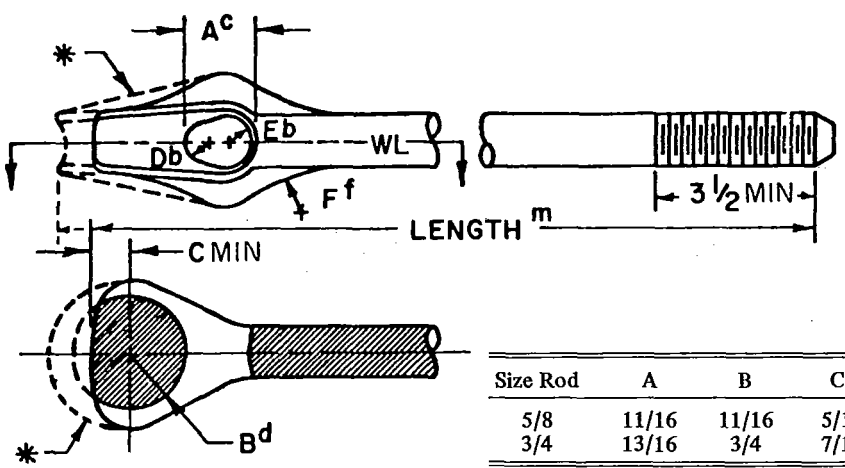

Size Rod	A	B	C*	D	E	F
5/8	11/16	11/16	5/16	1/4	9/32	5/8
3/4	13/16	3/4	7/16	9/32	11/32	3/4

Single Strand-Eye Anchor Rod

(a)

*Full circle dimension is optional and when used dimension "C" should be disregarded.

NOTES: W = Manufacturer's identification L = Length

ALLOWABLE VARIATIONS

a = 1/64	c = 1/16	e = 3/16	g = 3/8	j = 3/4	m = 3
b = 1/32	d = 1/8	f = 1/4	h = 1/2	k = 1	x = 0

A single-letter superscript indicates that the plus and minus value are the same: for example,
$D^b = 1/4 \pm 1/32$ for 5/8 = inch single strand-eye anchor rods

A double-letter superscript indicates that the plus value is that of the first letter and the minus value is that of the second letter: for example,
A^{cd} = 1-11/16, + 1/16, – 1/8 inch for 3/4-inch triple strand-eye anchor rods

Fig. 1
Dimensions for Single, Double, and Triple Strand-Eye Anchor Rods, in Inches

Copyright National Electrical Manufacturers Association
Provided by IHS under license with NEMA
No reproduction or networking permitted without license from IHS
Not for Resale

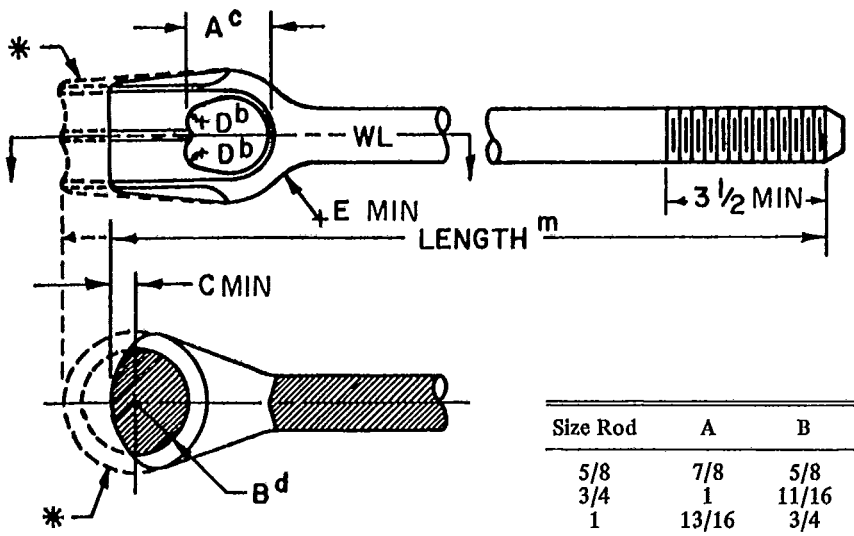

Size Rod	A	B	C*	D	E(Min)
5/8	7/8	5/8	1/8	7/32	3/8
3/4	1	11/16	5/32	1/4	1/2
1	13/16	3/4	3/16	5/16	3/4

Double Strand-Eye Anchor Rod

(b)

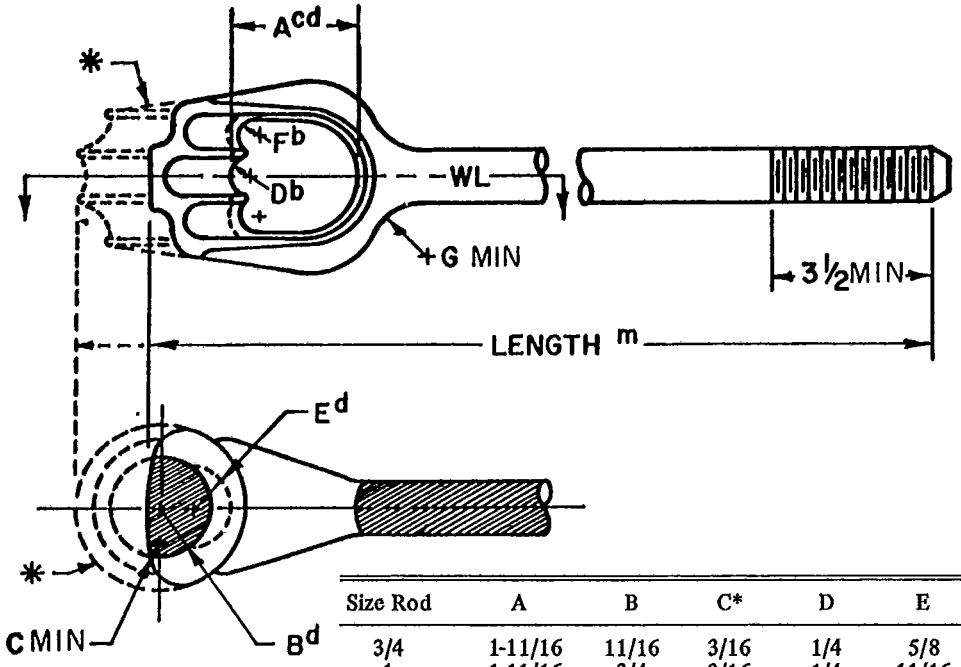

Size Rod	A	B	C*	D	E	F	G
3/4	1-11/16	11/16	3/16	1/4	5/8	7/32	3/4
1	1-11/16	3/4	3/16	1/4	11/16	1/4	1

Triple Strand-Eye Anchor Rod

(c)

Fig. 1 (Continued — for Notes see Page 7)

Copyright National Electrical Manufacturers Association
Provided by IHS under license with NEMA
No reproduction or networking permitted without license from IHS
Not for Resale